Vinson&Elkins

Gregory C. Staple
Tel 202.639.6744 **Fax** 202.639.6604

September 27, 2006

Electronic Filing

Ms. Marlene H. Dortch
Secretary
Federal Communications Commission
445 12th Street, SW
Room TW-A325
Washington, DC 20554

Re: ***Ex Parte* Presentation**
ET Docket No. 05-247; In the Matter of Continental Airlines, Inc. Petition for Declaratory Ruling Regarding Whether Certain Restrictions on Antenna Installation Are Permissible Under the Commission's Over-the-Air Reception Devices (OTARD) Rules

Dear Ms. Dortch:

On September 27, 2006, Sophy Chen, Senior Attorney for the Air Transport Association of America, William T. Lake, counsel for T-Mobile USA, Inc., Christopher Gutman-McCabe, Vice President, Regulatory Affairs, CTIA, and the undersigned, as counsel to Continental Airlines, Inc. met with Bruce Gottlieb, Legal Advisor to Commissioner Michael J. Copps and Barry Ohlson, Senior Legal Advisor to Commissioner Jonathan S. Adelstein. At this meeting, the parties discussed Continental's petition seeking a determination that the restrictions imposed by the Massachusetts Port Authority on the installation, maintenance and use of Continental's Wi-Fi antenna at Boston's Logan Airport are prohibited by the Commission's Over-the-Air Reception Devices rules. The matters discussed are described in the attached presentation which was previously filed in this docket on June 1, 2006.

Pursuant to section 1.1206(b) of the Commission's rules, a copy of this letter is being filed via ECFS with your office. Should you have any questions, please do not hesitate to contact the undersigned.

Sincerely yours,

/s/ Gregory C. Staple
Gregory C. Staple
Counsel to Continental Airlines, Inc.

Attachment

cc: Bruce Liang Gottlieb
Barry Ohlson

Presentation to Chairman Kevin J. Martin

In the Matter of Petition for Declaratory Ruling of Continental Airlines, Inc., ET Docket No. 05-247

Continental Airlines
Air Transport Association of America
American Airlines
CTIA – The Wireless Association®
Enterprise Wireless Alliance
T-Mobile USA
United Airlines
UPS

June 1, 2006
Washington, D.C.

Who we are

- John W. Stelly, Managing Director, Technology Department, Continental Airlines
- Donna Katos, Managing Attorney – Litigation, Continental Airlines
- Sophy Chen, Senior Attorney, Air Transport Association of America
- Tony Winston, Manager, Mobility and Directory Services, American Airlines
- Christopher Guttman-McCabe, Vice President, Regulatory Affairs, CTIA – The Wireless Association®
- Tim Totten, UPS Wireless Manager and Enterprise Wireless Alliance Chairman
- Nicholas Lewis, Corporate Public Affairs, UPS
- Kathleen O'Brien Ham, Managing Director, Federal Regulatory Affairs, T-Mobile
- Jacqueline Comiskey, Regional Manager Corporate Real Estate, United Airlines
- Robert E. Lee, Manager Ground Radio, United Airlines

Background

- Installation of fixed wireless antenna
  - In July 2004, Continental installed a fixed wireless antenna to create a Wi-Fi hotspot for Internet access within the premises of its Presidents Club at Logan Airport
  - Antenna enables anyone with an 802.11b Wi-Fi enabled computer to access the Internet from anywhere in the Club
- Antenna users
  - Continental employees
    - Wireless access to corporate network
  - Customers/Visitors to the Club
    - Wireless access to the Internet at no charge

Continental's Wi-Fi Antenna

Background (cont'd)

- Instant connection (no log-on screen, user ID, or password required)
- No charges or fees

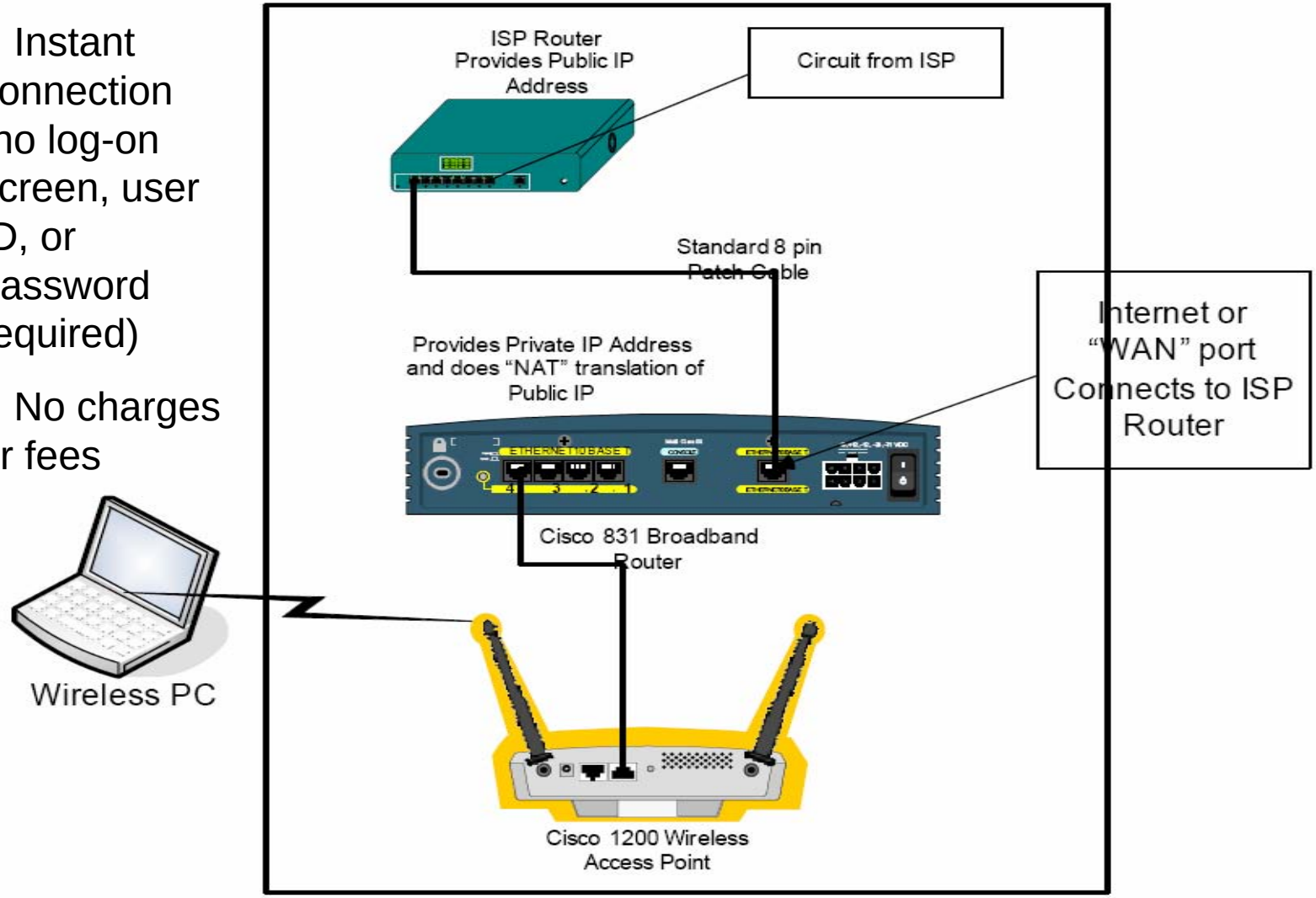

Background (cont'd)

- In June 2005, Massachusetts Port Authority ("Massport") demanded that the following airlines remove their Wi-Fi antennas or wired systems from their frequent flyer lounges:
  - Continental (Wi-Fi antenna)
  - American Airlines (wired broadband system)
  - Delta Air Lines (Wi-Fi antenna)

- Massport's demands coincided with the grant of an exclusive contract to AWG for the installation, operation and maintenance of a commercial airport-wide Wi-Fi system for the provision of Wi-Fi service throughout Logan

  - Massport's position is that everyone at Logan must use the AWG system

Background (cont'd)

- Consumer options to access the Internet via the AWG system:
  - Pay $7.95 per day per user, OR
  - Become a customer of iPass or Boingo (these companies have entered into agreements with AWG) or one of their partners, OR
  - Airport tenants buy the service from AWG to allow their employees and customers to access the Internet

- Massport and AWG receive a portion of the revenues from wireless Internet access service, regardless of how a user gains access to the Internet.

Petition for declaratory ruling

- On June 23, 2005, Continental informed Massport that its restriction on the use of the Wi-Fi antenna was in violation of the OTARD rules; Massport did not relent and threatened to remove the antenna

- On July 7, 2005, Continental filed a petition asking the FCC to declare that Massport's demand for removal of the antenna is prohibited and preempted by the OTARD rules

- In July 2005, OET placed the Petition on Public Notice
  - Approximately 2,000 frequent flyers filed comments in support of the Petition

Petition for declaratory ruling (cont'd)

- Supporting comments or *ex parte* filings were also filed by:

Air Transport Association

CTIA – The Wireless Association

American Airlines

Alliance for Public Technology

Enterprise Wireless Alliance

T-Mobile

Personal Communications Industry Association

Consumer Electronics Association

UPS

10 state PUC regulators

Media Access Project

New America Foundation

Issue before the FCC

- Are Massport's restrictions on the installation, maintenance and use of a fixed wireless antenna by Continental in its frequent flyer lounge in violation of the OTARD rules? The answer is Yes.
  - Massport imposed a restriction that impairs the installation, maintenance or use of Continental's antenna
  - The antenna is located in Continental's Presidents Club, an area within its exclusive use or control
  - Continental uses the antenna to transmit fixed wireless signals, other than by satellite
  - The antenna is one meter or less in diameter
- Matter is ripe for decision and Continental urges the Commission to make a decision

The safety exception to the OTARD rules does not apply

- The safety exception is meant to allow restrictions that promote safety by prohibiting antennas being placed in certain physical locations (*e.g.*, fire codes that prevent installation of antennas on fire escapes)
  - Massport has not suggested that such concerns are present in this case
- The safety exception is not a "public safety" exception
  - Even if it was, no public safety entities are using the AWG system and none have filed comments in support of Massport
- In order to fall within the safety exception, Massport must identify a clearly defined, legitimate safety objective and must ensure that the restriction is no more burdensome than necessary to achieve the safety objective
  - Massport has failed to provide any basis to conclude that its restrictions are necessary to accomplish a clearly defined safety objective
  - Massport has failed to demonstrate that its restrictions on lessees' use of unlicensed wireless devices are no more burdensome than necessary to accomplish a clearly defined safety objective

Massport ignores FCC's Part 15 spectrum management approach

- Massport says the public interest requires it to manage and prioritize spectrum resources at Logan, but:
  - Congress has delegated this function to the FCC
  - Under Part 15, unlicensed frequencies are shared and subject to open access and Massport cannot prioritize their use
  - FCC has provided licensed spectrum for mission-critical public safety communications
  - The Commission clarified last year that no user has priority rights in unlicensed spectrum (*Remington Arms*, FCC 05-194)
    - "It does not matter who operates the unlicensed equipment or the purpose for which the equipment is used – no protection against received interference is provided or available."

The central antenna exception does not apply

- Massport's attempt to classify a network of 245 individual antennas throughout the entire airport as a "central antenna" stretches the common sense definition of a central antenna to the breaking point

- Nonetheless, the central antenna exception does not apply because:

  – Users of the AWG system cannot receive service from their service provider of choice
  – Massport admits that AWG's signal quality in the Presidents Club is not as good as Continental's
  – The cost to Continental of using Massport's commercial system is unknown and potentially higher than what it costs Continental to operate its own antenna
  – Massport requires that tenants seek "prior approval" before the installation of a Wi-Fi antenna, which constitutes unreasonable delay under the OTARD rules

The FCC has the authority to provide the relief requested

- Massport argues that the FCC lacks the statutory authority to extend the OTARD rules to fixed wireless signals. However:
  - In 2004, the FCC considered and rejected identical arguments that it acted outside the scope of its authority in extending OTARD to fixed wireless services (19 FCC Rcd 5637, ¶ 8)
    - Commission determined it would be illogical for it to protect one group of consumers of wireless services (users of video services) but deny such protections to another group of consumers (users of fixed wireless services) based solely on the nature of the equipment
    - Massport did not seek reconsideration of this Commission order and is precluded from seeking it now

The OTARD rules do not effect a taking

- OTARD rules do not effect a taking
  - There is no *per se taking* because the OTARD rules apply only where there is consent by the landlord to the occupation of the property by the tenant (BOMA v. FCC, 254 F.3d 89)
- There is no *regulatory taking* per BOMA because:
  - Massport has not asked a court to make an inquiry entailing factual assessments of the purposes and economic effects on Massport of the application of the OTARD rules to Continental's antenna, which is a prerequisite for such a claim

Massport's restriction is contrary to federal law and policy

- The President has stated that, "We ought to have…universal, affordable access for broadband technology by the year 2007" (President George W. Bush, March 26, 2004)
- Consistent with the Administration's technology agenda, the FCC issued the Internet Policy Statement, which states that consumers are entitled to competition among network providers, applications, service and content providers
- Congress has called for the deployment on a reasonable and timely basis of advanced telecommunications capabilities to all Americans (Section 706 of the Act)
- The purpose of the OTARD rules is to (a) ensure that consumers have access to a broad range of services and service providers, and (b) foster full and fair competition among different types of services and service providers

FCC can and should end Massport's anti-competitive actions

- Management of unlicensed spectrum in multi-tenant environments such as airports is clearly within the FCC's jurisdiction
- Massport's actions deprive Continental and other airport tenants of a choice among competing Internet service providers in patent violation of the OTARD rules
- If left unchecked, Massport's monopolistic behavior will encourage other airports and landlords to restrict use of unlicensed wireless services
- Massport's actions are contrary to the FCC's efforts to encourage the national deployment of broadband services

The Commission Should:

- As expeditiously as possible, issue an Order granting Continental's Petition on the basis that Massport's lease restrictions violate the OTARD rules
- Reaffirm that management of all unlicensed spectrum, including in multi-tenant environments such as airports, is within the Commission's exclusive jurisdiction
- Reaffirm that OTARD applies to qualifying antennas used in unlicensed spectrum