LAWLER, METZGER, MILKMAN & KEENEY, LLC

2001 K STREET, NW
SUITE 802
WASHINGTON, D.C. 20006

A. RICHARD METZGER, JR.
PHONE (202) 777-7729

PHONE (202) 777-7700
FACSIMILE (202) 777-7763

October 2, 2006

Via Electronic Filing

Marlene H. Dortch, Secretary
Federal Communications Commission
445 12th Street SW
Washington, DC 20554

Re: *Ex Parte* Notice: AT&T, Inc. and BellSouth Corporation Applications for Transfer of Control – WC Docket No. 06-74

Dear Ms. Dortch:

On Friday, September 29, 2006, Michael Fingerhut of Sprint Nextel Corporation and the undersigned, outside counsel for Sprint Nextel, met with Scott M. Deutchman and Bruce L. Gottlieb, Legal Advisors to Commissioner Michael J. Copps, to discuss issues pending in the above-referenced proceeding. During the meeting, representatives of Sprint Nextel discussed the written comments filed by Sprint Nextel in this proceeding, the attached diagram, and the attached written ex parte filed on September 22, 2006 by COMPTEL and other parties.

Pursuant to the Commission's rules, this letter is being submitted for inclusion in the public record of the above-referenced proceeding.

Sincerely,

/s/ A. Richard Metzger, Jr.
A. Richard Metzger, Jr.

cc: Scott M. Deutchman
Bruce L. Gottlieb

Attachments

Sprint Nextel Is Heavily Dependent on Special Access Services Provided By Incumbent Local Exchange Carriers to Connect Sprint Nextel's Customers to Sprint Nextel's Network

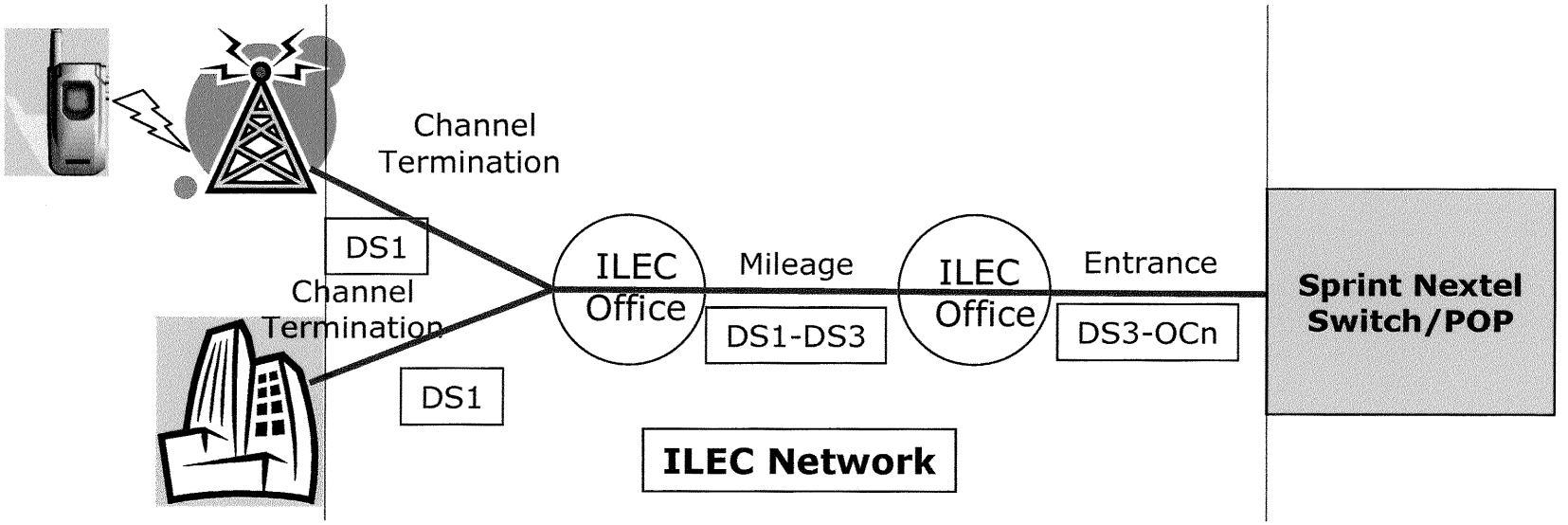

Products Supported:
- Wireless voice and data
- Business voice and data

Sprint
Together with NEXTEL

September 22, 2006 **EX PARTE**

Ms. Marlene H. Dortch
Secretary
Federal Communications Commission
Room TW-325
445 12th Street, S.W.
Washington D.C. 20554

Re: In the Matter of AT&T Inc. and BellSouth Corporation
Applications for Approval of Transfer Of Control,
WC Docket No. 06-74

Dear Ms. Dortch:

This *ex parte* is submitted on behalf of the undersigned individual companies and trade associations that participate in or whose members participate in the special access service market. The signatories, either themselves or their members, constitute a broad spectrum of buyers and sellers of special access services, including mobile network operators, enterprise customers, CLECs and IXCs. We have chosen to act in concert because of our shared concern that the proposed merger of AT&T and BellSouth will result in a public interest harm by increasing the combined company's ("Merged Firm's") incentive and opportunity to raise rivals' costs and, correspondingly, to increase retail prices for service for which special access services are a necessary input. Among other things, the proposed merger will increase the Merged Firm's incentive and opportunity to (i) increase the price of special access services and (ii) impose onerous and inefficient non-price requirements on special access service purchasers that will enable the Merged Firm to foreclose as much of the special access service market as possible to the Merged Firm's competitors. As with prior BOC mergers, the Commission cannot conclude that the proposed merger between AT&T and BellSouth is in the public interest unless the Applicants comply with comprehensive conditions designed to diminish the public interest harms caused by the merger.

Numerous commenters in this docket have demonstrated that the proposed merger of the SWBT-PacTel-SNET-Ameritech-AT&T behemoth with BellSouth will result in very substantial and well-understood public interest harms. Prior to the merger, both AT&T and BellSouth control the only transmission facilities serving the vast majority of

commercial buildings in their respective ILEC territories.[1] While the Applicants independently have market power today in the business market, the proposed merger will make a bad situation much worse by

(1) eliminating AT&T as an actual and potential competitor in the BellSouth region in the provision of special access services[2] and by eliminating BellSouth as a potential special access service competitor in the AT&T ILEC territory;

(2) substantially increasing the size of the Merged Firm's footprint, thereby substantially increasing the Merged Firm's incentive and ability to raise rivals' costs; and

(3) reducing regulators' ability to detect and punish anticompetitive conduct by the Merged Firm (as well as by Verizon and Qwest) by eliminating BellSouth as an independent benchmark against which to judge the practices of other large ILECs.[3]

The Commission found that precisely these three types of harms rendered the last round of BOC mergers unlawful absent extensive conditions designed to constrain the abuse of market power.[4] Because the proposed merger results in a far larger ILEC

---

[1] *See, e.g.,* Dep't. of Justice Complaint at 8, *United States v. SBC Communications, Inc. and AT&T Corp.*, Case No. 1:05CV02102 (D.D.C., filed Oct. 27, 2005) (addressing AT&T's ILEC territory).

[2] For purposes of the conditions proposed in this filing, "special access service" means a dedicated transmission link between two places within a LATA, including layer 2 and layer 3 services, without regard to the technology used to provide the link, and without regard to whether the traffic transmitted over the transmission link is regulated as a telecommunications service, information service or as some other classification (except that it shall not apply to facilities used solely to provide cable service).

[3] *See, e.g.,* Comments of Sprint Nextel Corp. (filed June 5, 2006), Comments of Global Crossing North America Inc. (filed June 5, 2006), Comments of Cbeyond, Inc., *et al.*, at 60, *et seq.* (filed June 5, 2006) ("Cbeyond Comments") Petition to Deny of COMPTEL at 4, *et seq.* (filed June 5, 2006) ("COMPTEL Petition"), Petition to Deny of Time Warner Telecom Inc.at 16, *et seq.* (filed June 5, 2006) ("Time Warner Petition") (all predicting anticompetitive effects in the special access market); Cbeyond Comments at 88, *et seq.*, Time Warner Petition at 33 *et seq.*, Petition to Deny of Earthlink, Inc. at 20-26 (filed June 5, 2006) ("Earthlink Petition") (all discussing the increased incentive and ability to raise competitors' costs); Cbeyond Comments at 78 *et seq.*, COMPTEL Petition at 11, *et seq.*, Time Warner Petition at 60 *et seq.*, Earthlink Petition at 32-36 (all discussing the increased difficulty of comparative oversight); Reply comments of Ad Hoc Telecommunications Users Committee at 2-14 (June 20, 2006).

[4] *Applications of GTE Corp., Transferor, and Bell Atlantic Corp., Transferee, for Consent to Transfer Control of Domestic and International Sections 214 and 310 Authorizations and Application to Transfer Control*, Memorandum Opinion and Order, 15 FCC Rcd 14032, ¶ 96 *et seq.* (2000) ("*GTE-Bell Atlantic Order*"); *Applications of Ameritech Corp., Transferor, and SBC Communications, Inc., Transferee, for Consent to*

footprint and an even smaller number of large ILEC benchmarks, it will result in even greater harms to competition than was the case with the last BOC mergers. Moreover, the harms to competition are likely to be particularly severe where competitors seek to provide advanced services in the Merged Firm's territory because, as the Commission has recognized, those services offer ILECs the greatest opportunities to slow roll the delivery of service and raise rivals' costs.[5] As in prior BOC mergers, the policies of Section 706 mandate that the Merged Firm be prevented from acting on its increased incentives to harm competition for critically important next-generation services.[6]

Accordingly, if it approves the proposed merger, the Commission must condition such approval on the Merged Firm's compliance with conditions that, as much as possible, ameliorate the harms posed by the merger.[7] In this regard, it is important to emphasize that the conditions imposed on the merging parties in the recent BOC-IXC mergers are, by themselves, insufficient to address the harms posed by the instant merger. As the Commission recognized in its review of those mergers, the elimination of AT&T as an independent special access service competitor in the SBC territory and the elimination of MCI as an independent special access service competitor in the Verizon territory harmed competition in the special access service market. To address this harm, the Commission required that the merging parties comply with certain conditions designed to limit the merging parties' ability to increase price and degrade the quality of special access services. Several of the signatories already have enough experience since the BOC-IXC mergers to conclude that those conditions have been inadequate to prevent the harms that resulted from those mergers. More importantly, those mergers did not result in an expanded ILEC footprint or the elimination of an independent benchmark. Thus, while the Commission should extend application of the conditions imposed in the SBC-AT&T merger to the BellSouth region to address the elimination of AT&T as an independent special access service competitor in that region, those conditions are clearly insufficient to address the harms caused by the increased ILEC footprint and elimination of one of the few remaining benchmark firms.

To address the merger-specific harms in this case, the signatories propose the following special access service conditions:

Transfer Control, Memorandum Opinion and Order, 14 FCC Rcd 14712 ¶¶ 56-60 (1999) subsequent history omitted ("*SBC-Ameritech Order*").

[5] *GTE-Bell Atlantic Order* ¶ 174; *SBC-Ameritech Order* ¶ 187.

[6] *See id.*

[7] While this letter only addresses conditions that concern the special access market, many of the signatories to this letter also have concerns about, and indeed support conditions that address, the harmful effect of the proposed merger on the availability of unbundled network elements, interconnection, and other necessary inputs.

(1) a special access service rate regulation and price cap condition that eliminates Phase II pricing flexibility[8] for DS1, DS3, certain Ethernet services and any other local transmission services that offer similar revenue opportunities[9] in all areas in the Merged Firm's ILEC territory and re-establishes a lower price cap for special access services;

(2) a baseball-style, best and final offer arbitration procedure that may be invoked by those seeking to purchase special access service from the Merged Firm under volume-term contracts rather than under price caps;

(3) a fast track (120 day) arbitration procedure for alleged breaches of resulting agreements and any other forms of unreasonable conduct by the applicants in the provision of special access service under a commercial agreement or tariff offering;

(4) a prohibition on the Merged Firm conditioning the availability of any discounts off of special access service tariffed prices on requirements that are not reasonably related to the efficiencies yielded by volume and/or term commitments;

(5) a requirement that the Merged Firm permit a customer to "port" the entirety of an existing special access service plan or commercial agreement (except for state-specific rates) from a state in the Merged Firm's territory in which it currently is effective to any other state in the Merged Firm's territory; and

(6) in order to ensure that the above conditions have a meaningful effect in the marketplace, (a) a limited one year fresh look option for affected special access service customers and (b) agreement by the Merged Firm that any grant of forbearance under Section 10 of the Communications Act, as amended, shall not diminish, alter or in any way affect the Merged Firm's obligations or responsibilities under these merger conditions.

These proposed conditions, which are described in more detail in the attached Exhibit B, address the harms caused by the merger. Moreover, by encompassing IP transmission such as Ethernet, the conditions address the critical Section 706 policies established by Congress and followed by the Commission in numerous prior orders.

---

[8] *See generally Access Charge Reform, et al.,* Fifth Report and Order and Further Notice of Proposed Rulemaking, 14 FCC Rcd 14221 (1999).

[9] The Commission has used revenue opportunities in its unbundling orders as a guide to determining whether it is possible for competitors to deploy a particular type of transmission facility. *See, e.g., Unbundled Access to Network Elements; Review of the Section 251 Unbundling Obligations of Incumbent Local Exchange Carriers*, Order on Remand, 20 FCC Rcd 2533, ¶ 149 (2004). Revenue opportunities are therefore an appropriate means of assessing what future services should be subject to the price cap condition.

Price cap condition. The price cap condition would eliminate Phase II pricing flexibility for services for which rate deregulation is inappropriate (DS1, DS3, Ethernet services, and any other local transmission service offering similar revenue opportunities to the seller) in all areas in the Merged Firm's ILEC territory. Services subject to this revocation of Phase II would instead become subject to Phase I pricing flexibility only. The Merged Firm would be ineligible to apply for Phase II pricing flexibility for the affected services for at least seven years after the merger. This regulation would reduce the Merged Firm's ability to raise prices and engage in price squeeze tactics after the merger. Absent the imposition of this condition, it is likely that the Merged Firm would engage in this conduct even more than it has in the past. Moreover, the price cap condition addresses these concerns by relying on well-established incentive regulation mechanisms that the Commission has hailed as effective means of increasing the efficiency of regulated firms.[10] Finally, the price cap condition utilizes an X-Factor of 6.5 percent, which both AT&T and BellSouth supported as signatories to the CALLS plan.[11]

Commercial best and final arbitration condition. The commercial arbitration condition would complement the price cap regime. The commercial arbitration remedy would apply in all MSAs currently subject to Phase I and Phase II pricing flexibility. It would apply to any special access service, as defined herein, offered by the Merged Firm in those areas and for which the Merged Firm is eligible to enter into contract tariffs. The commercial arbitration mechanism would be available to resolve any kind of dispute regarding the prices, terms and conditions that a purchaser seeks to be included in a proposed special access services agreement with the Merged Firm, including those concerning the interconnection of networks for purposes of accessing the Merged Firm's transmission services (*e.g.,* disputes concerning service priority and/or service quality features). The comprehensive scope of the commercial arbitration mechanism is necessary given the Merged Firm's incentive to exploit every opportunity to raise rivals' costs, including opportunities created by the introduction of new advanced services for which the wholesale arrangements for purchasing inputs are new.

The "best and final" commercial arbitration condition is designed to replicate the outcome of commercial negotiations among parties of relatively equal bargaining power, as would be the case in a competitive market with numerous buyers and sellers. Because a baseball arbitration requires that the arbitrator pick one of the two proposals in its entirety, both parties, including in this case the Merged Firm, have an incentive to

---

[10] *Policy and Rules Concerning Rates for Dominant Carriers*, Second Report and Order, 5 FCC Rcd 6786, ¶¶ 65-70 (1990).

[11] *Access Charge Reform, et al.*, Sixth Report and Order, *et al.*, 15 FCC Rcd 12962 ¶ 161 (2000), subsequent history omitted; *see also id.* at n.1. The CALLS plan was designed to expire on June 30, 2005 on the expectation that the Commission would have by that date formulated and implemented a replacement pricing mechanism for special access services. This has yet to occur. Accordingly, and in view of the harms posed by the proposed merger, the 6.5 percent X-Factor that had been a central element of the CALLS settlement should be reinstated retroactively in markets that have been prematurely deregulated.

propose the more reasonable agreement terms. In this way, the commercial arbitration condition reduces the likelihood that the Merged Firm would act on its increased incentives to deny, delay and degrade transmission sold to competitors. Moreover, by altering the incentives of the Merged Firm, the commercial arbitration proposal would ameliorate to some extent the harm caused by the elimination of an independent benchmark by making it less necessary for regulators to detect unreasonable conduct. At the same time, the condition minimizes the day to day involvement of the Commission in regulating the market.

The commercial arbitration condition is modeled closely on remedies that the Commission has used in the past, particularly in similar situations involving horizontal or vertical foreclosure or pricing problems exacerbated by a merger. For example, the Commission's rules prescribe the use of final offer arbitration to settle certain interconnection disputes.[12] The Commission has also applied this remedy as a condition to its approval of mergers. For example, in its order consenting to News Corp.'s acquisition of an interest in Hughes Electronics Corp.,[13] the Commission found that the combination of News Corp.'s regional sports network programming with DirecTV's national distribution platform could result in price increases because News Corp. would be able to extract higher prices or other concessions from unaffiliated multichannel video programming distributors. The Commission adopted baseball-style arbitration to address this concern.[14] More recently, in its decision approving the transfer of control of the assets of Adelphia to Comcast and Time Warner, the Commission imposed a similar arbitration remedy for disputes relating to commercial leased access in order to mitigate public interest harms deriving from increased horizontal concentration resulting from the transactions.[15]

The implementation of a commercial arbitration remedy supports the Commission's goal of imposing regulation only where necessary. The proposed

---

[12] 47 C.F.R. § 51.807(d)-(f). As the Commission explained in its order implementing the Telecommunications Act of 1996, "[a]dopting a 'final offer' method of arbitration and encouraging negotiations to continue allows us to maintain the benefits of final offer arbitration, giving parties an incentive to submit realistic 'final offers,' while providing additional flexibility for the parties to agree to a resolution that best serves their interests." *Implementation of the Local Competition Provisions of the Telecommunications Act of 1996*, First Report and Order, 11 FCC Rcd 15499, ¶ 1294 (1996), subsequent history omitted.

[13] *See General Motors Corp. and Hughes Electronics Corp., Transferors, and The News Corp. Ltd., Transferee, for Authority to Transfer Control*, Memorandum Opinion and Order, 19 FCC Rcd 473 (2004) ("*Hughes/News*").

[14] *See id.* ¶ 173.

[15] *See Adelphia Communications Corp, Transferor, and Time Warner Cable, Inc. and Comcast Corp., Transferees, for Authority to Transfer Control*, Memorandum Opinion and Order, 21 FCC Rcd 8203, ¶¶ 109 and 156-157, and App. B (2006).

arbitration conditions present little downside risk. If the Applicants are correct that the affected markets are competitive, purchasers will not need to use the arbitration remedy because there would be no benefit to doing so; the outcome would be similar, if not identical, to those rates, terms and conditions already offered by the Applicants. If, on the other hand, the signatories are correct in maintaining that the affected markets are not competitive, then the arbitration remedy will be a crucial mechanism, in conjunction with the price cap and other conditions described herein, for bringing the discipline of competition to bear on the Merged Firm and increasing the ability of competitors to challenge the entrenched incumbents and bring new, more cost-effective services to customers. The commercial arbitration condition should remain in effect until the later of seven years from the merger closing date or the release of a final order addressing the appropriate rate regulation of special access services in WC Docket No. 05-25.

Expedited dispute resolution arbitration condition. The fast track arbitration procedure (to be completed within 120 days) seeks to address disputes that arise outside of contract negotiations. The expedited process would be available to resolve alleged breaches by the Applicants of agreements resulting from the arbitration process or to address any other unreasonable conduct by the Merged Firm in providing special access service pursuant to a negotiated agreement or general tariff offering. This mechanism is necessary because an agreement or tariff offering can be thoroughly undermined by strategic misconduct by the Merged Firm, and the delay inherent in regular litigation could effectively drive the Applicants' competitors and business customers out of business. The expedited arbitration condition should remain in effect until the later of seven years from the merger closing date or the release of a final order addressing the appropriate rate regulation of special access services in WC Docket No. 05-25.

Prohibited terms in volume-term agreements conditions. The prohibition against terms in agreements that have no reasonable connection to lower costs yielded by volume or term commitments addresses one of the most obvious means by which the Merged Firm could act on increased incentives to raise rivals' costs after the merger. It is well documented in this and other proceedings that AT&T and BellSouth have required that customers receiving volume-term discounts comply with conditions that are harmful to competition in the wholesale market and that have no connection to the lower costs yielded by volume and term commitments.[16] Conditions such as prohibitions against purchasing UNEs, prohibitions against purchasing services from competitors and tying arrangements such as those included in SBC's MVP Discount Plan, HCTPP Discount Plan and DS1 TPP Discount Plans are examples of such conditions. To prevent the Merged Firm from requiring inclusion of these conditions in volume-term agreements after the merger, the "prohibited terms" condition makes it unlawful for the Merged Firm to require that special access purchasers comply with any requirement that does not have a reasonable nexus with the efficiencies yielded by volume and/or term commitments.

---

[16] *See, e.g.*, Petition to Deny of Time Warner Telecom, at 15 (filed June 5, 2006); Comments of Cbeyond Inc. at 85-86 and attached Declaration of Lisa R. Youngers ¶ 6 (filed June 5, 2006); Reply Declaration of Joseph Farrell, Reply Comments of COMPTEL, et al., at ¶¶ 5-11, WC Docket No. 05-25; RM 10593 (filed July 29, 2005).

Contract portability condition. The contract portability condition seeks to address the likely spread of worst practices by the Merged Firm and the elimination of BellSouth as an independent benchmark. It does so by requiring that the Merged Firm allow a purchaser to take advantage of any contract or tariff offering by the Merged Firm in any state in any other part of the Merged Firm's territory.

Fresh look and forbearance condition. The fresh look condition is necessary to allow purchasers to take advantage of the other conditions. Indeed, without fresh look, special access service customers will remain locked into the existing agreements after the merger and the other conditions discussed herein would be of significantly less value This condition would allow any special access service customer of the Merged Firm that is bound by an existing contract or tariff to terminate such arrangement without the application of early termination penalties of any kind. The fresh look provision could be invoked once per contract or tariff arrangement by each customer, and only within one year after the merger date. Similarly, the Merged Firm's agreement that any grant (by default of otherwise) of a forbearance petition would not diminish, alter or in any way affect the Merged Firm's obligations or responsibilities under these merger conditions, is necessary to ensure the continued viability of the merger conditions.

The Commission should only consider a petition for modification of any of these conditions if there has been an industry-wide resolution of special access service pricing issues through the special access service proceeding (WC Docket No. 05-25) or the relevant time-period of the condition has elapsed, whichever is later.

Pursuant to Section 1.1206(b) of the Commission's rules, 47 C.F.R. § 1.1206(b), one electronic copy of this filing is being filed in each of the above-referenced proceeding.

Respectfully submitted,

/s/

Karen Reidy
Vice President, Regulatory Affairs
COMPTEL
1900 M Street, NW, Suite 800
Washington, DC 20036
(202) 872-5740

/s/

Colleen Boothby
Levine, Blaszak, Block & Boothby, LLP

2001 L Street, NW, Suite 900
Washington, DC 20036
(202) 857-2250

Counsel for AdHoc Telecommunications
Users Committee

/s/

Jennifer A. Manner
Vice President, Regulatory Affairs
MOBILE SATELLITE VENTURES SUBSIDIARY LLC
10802 Parkridge Boulevard
Reston, VA 20191
(703) 390-2700

/s/

Don Shepheard
Vice President,
Federal Regulatory Affairs and Policy
Time Warner Telecom Inc.
228 Blanchard Road
Braintree VT 05060
(802) 728-5489

cc: Michelle Carey
Ian Dillner
Scott Deutchman
Scott Bergmann
Thomas Navin
Renee Crittendon
Nick Alexander
Don Stockdale

EXHIBIT A

SUMMARY LIST OF SPECIAL ACCESS SERVICE CONDITIONS

(1) Extend the conditions imposed on the applicants in the SBC-AT&T merger to BellSouth (as well as AT&T) for a minimum of an additional seven years

(2) Eliminate Phase II pricing flexibility for DS1, DS3, certain Ethernet services, and any other local transmission services that offer similar revenue opportunities in all areas in the Merged Firm's ILEC territory and re-establish a lower price cap for the affected services for a minimum of seven years;

(3) Adopt a baseball-style, best and final offer, arbitration procedure that may be invoked by those seeking to purchase any special access service for a minimum of seven years;

(4) Adopt a fast track (120 day) arbitration procedure for alleged breaches of resulting agreements and any other forms of unreasonable conduct in the provision of special access service by the applicants under any contract or tariff for a minimum of seven years;

(5) Prohibit the Merged Firm from conditioning the availability of any discounts off of tariffed prices on requirements that are not reasonably related to the efficiencies yielded by volume and/or term commitments for a minimum of seven years;

(6) Require that the Merged Firm permit a customer to "port" the entirety of an existing special access service plan or commercial agreement (except for state-specific rates) from a state in the Merged Firm's territory where it currently is effective to any other state in the Merged Firm's territory for a minimum of seven years;

(7) In order to ensure that the above conditions have a meaningful effect in the marketplace, establish (a) a limited one year fresh look option for affected special access service customers and (b) require that the Merged Firm agree that any grant of forbearance under Section 10 of the Communications Act, as amended, shall not diminish, alter or in any way affect the Merged Firm's obligations or responsibilities under these merger conditions.

EXHIBIT B

DETAILED DESCRIPTION OF CONDITIONS NECESSARY TO OFFSET THE HARM CAUSED IN THE SPECIAL ACCESS SERVICE MARKET BY THE PROPOSED AT&T/BELLSOUTH MERGER

Except where otherwise indicated, the following conditions shall apply to all special access services. For purposes of these conditions, the term "special access service" is defined as a dedicated transmission link between two places within a LATA, including layer 2 and layer 3 services, without regard to the technology used to provide the link, and without regard to whether the traffic transmitted over the transmission link is regulated as a telecommunications service, information service or as some other classification (except that it shall not apply to facilities used solely to provide cable service).[17]

I. Special Access Service Rate Regulation

A. Application of Price Caps and Elimination of Phase II Pricing Flexibility. The Merged Firm[18] shall offer all DS1 services, DS3 services, services that AT&T refers to as Opt-E-Man in the Ameritech Tariff F.C.C. No. 2, in the Pacific Bell Tariff F.C.C. No. 1, in the Southwestern Bell Tariff F.C.C. No. 73, and in the SNET Tariff F.C.C. No. 39, services that BellSouth refers to as BellSouth Metro Ethernet Service in the BellSouth Tariff F.C.C. No. 1, and any other special access services, without regard to technology, that offer similar revenue opportunities for the seller (these services are collectively referred to hereafter as "Affected Services") pursuant to price caps beginning 60 days after the closing date of the merger. The Merged Firm shall not have the right to apply for Phase II pricing flexibility for the Affected Services in any MSA until the later of seven years after the closing date of the merger or the release of a final order addressing the appropriate rate regulation of special access services in WC Docket No. 05-25. The Merged Firm shall continue to offer an Affected Service subject to Phase I pricing flexibility in any MSA in which such service had been subject to either Phase I or Phase II pricing flexibility on the date the Commission approved the merger. The Merged Firm may apply for Phase I pricing flexibility for any Affected Service in any MSA after the merger.

B. Reinitialization of Rates. Sixty days after the close of the merger, the Merged Firm shall (i) reincorporate its rates for Affected Services in its special access service price cap basket, create a separate service category within that basket for Opt-E-Man and BellSouth Metro Ethernet Services (together, "Affected Ethernet

---

[17] *SBC Communications Inc. and AT&T Corp. Applications for Approval of Transfer of Control*, Memorandum Opinion and Order 20 FCC Rcd 18290, ¶ 24 (2005).

[18] References to Merged Firm include any subsidiary or majority owned or controlled enterprises as well as any predecessors or successors in interest.

Services"), and establish pricing bands for the service categories for DS1, DS3 and Affected Ethernet Services that limit price increases for each band to 5 percent per year; if the Merged Firm provides any other Affected Service after the close of the merger, the Merged Firm shall establish a separate service category for such service subject to a price increase limit of 5 percent per year; (ii) reinitialize the price cap index ("PCI") for the special access service basket at the level that would have applied had the FCC set the X Factor applicable to that basket at 6.5 percent for 2004, 2005 and 2006; and (iii) target all of the rate reductions resulting from such re-initialization of the PCI to Affected Services.

C. Application of X-Factor After Reinitialization. The Merged Firm shall apply a 6.5 percent X Factor to the special access service basket each year for seven years after the initial reinitialization.

D. Reassessment of Plan After Seven Years. At any time after seven years have passed from the reinitialization, the Commission may reassess the price cap index for the Merged Firm's special access service basket. After such seven years have expired, absent a Commission decision implementing a different X Factor for the Merged Firm's special access service basket or the adoption of a final order addressing the appropriate rate regulation of special access services in WC Docket No. 05-25, that X Factor will remain at 6.5 percent.

II. Commercial Arbitration Remedy for Entry Into a Special Access Service Agreement

A. Eligibility. The commercial arbitration remedy is available to any carrier or enterprise customer seeking to purchase or continue to purchase special access services ("Requesting Customer") from the Merged Firm in its ILEC territory. The Commercial Arbitration remedy shall be available until the later of seven years after the closing date of the merger or the release of a final order addressing the appropriate rate regulation of special access services in WC Docket No. 05-25.

B. Exercise of Arbitration Right. At any time after requesting the negotiation of a special access services agreement with the Merged Firm, a Requesting Customer may notify the Merged Firm that it intends to request arbitration over the rates, terms and/or conditions of special access service. The Merged Firm shall not have the right to request arbitration. The following specific regulations shall apply to requests for arbitration.

1. A Requesting Customer may request arbitration to resolve any dispute regarding any rate, term or condition associated with accessing the Merged Firm's special access services, including but not limited to, disputes concerning the interconnection of networks for purposes of accessing the Merged Firm's transmission service (*e.g.*, disputes concerning service priority and service quality features).

2. Upon receiving a Requesting Customer's notice of intent to submit a dispute to arbitration, the Merged Firm must continue to provide special access services in a manner that complies with the terms and conditions (other than those prohibited by condition III below) of any existing, expired or expiring agreement or contract tariff, as long as the Requesting Customer continues to meet the other obligations of the arrangement. The Merged Firm shall continue to provide service in such manner until the Requesting Customer and the Merged Firm enter into a new special access service commercial agreement (either as a result of commercial negotiations or as a result of best and final arbitration). For a Requesting Customer making a first-time request for special access service, the Merged Firm shall provide service pursuant to its tariff to the Requesting Customer, although if different rates are subsequently determined as a result of the arbitration, such rates will apply retroactively to the access services provided during the period prior to final agreement.

3. Following the Requesting Customer's notice of intent to submit the dispute to arbitration, but prior to filing for formal arbitration with the American Arbitration Association ("AAA") or a mutually agreed upon neutral third-party arbitrator (such arbitrator and the AAA being hereinafter referred to as the "Arbitrator"), the Requesting Customer and the Merged Firm will enter a "cooling off" period of 15 business days during which negotiations will continue.

4. The Requesting Customer's formal demand for arbitration, which shall include the Requesting Customer's "final offer" and any supporting arguments and evidence, may be filed with the Arbitrator no earlier than the 15th business day after the Requesting Customer serves its intent to arbitrate on the Merged Firm. The Merged Firm must participate in the arbitration proceeding. The Arbitrator will notify the Merged Firm and the Requesting Customer upon receiving the Requesting Customer's formal filing.

5. The Merged Firm must file a final offer with the Arbitrator within two business days of being notified by the Arbitrator that the Requesting Customer has filed a formal demand for arbitration.

6. The final offers shall be in the form of a contract for access services for a minimum period of 1 year.

7. The Requesting Customer's final offer may not be disclosed to the Merged Firm until the Arbitrator has received the final offer from the Merged Firm. Upon receipt of both offers, the Arbitrator shall simultaneously provide a copy of the Requesting Customer's final offer to the Merged Firm, and a copy of the Merged Firm's final offer to the Requesting Customer.

C. Rules of Arbitration. The rules governing the "best and final" arbitration shall be as follows:

1. The arbitration shall be decided by a single Arbitrator mutually agreed to by the parties or selected by the AAA from members of its Telecommunications Panel and shall be conducted under the expedited procedures of the AAA Commercial Arbitration Rules, excluding the rules relating to large, complex cases. The location of the arbitration shall be selected by the Requesting Customer from among Atlanta, Denver, Chicago, Dallas, New York, Los Angeles, and Washington D.C.

2. The Arbitrator shall choose the final offer of the party that most closely approximates commercially reasonable rates, terms and conditions in the industry with respect to the access services at issue.

3. The Arbitrator shall consider, in determining commercial reasonableness, not only price and volume, but also other material terms. In determining whether the inclusion of specific terms is commercially reasonable, the Arbitrator shall give the greatest weight to whether similar or identical terms are included in similar contracts involving a non-ILEC seller as well as the manner in which such non-ILEC sellers have provided service pursuant such contracts.

4. The arbitrator may also consider any other relevant evidence (and may require the parties to submit such evidence to the extent it is in their possession). Such relevant evidence shall include, but is not limited to:

a. Current contracts between the Requesting Customer and either (i) the Merged Firm or (ii) other access services providers (contracts with other service providers are due the strongest evidentiary weight pursuant to paragraph II.C.3 above), covering all or part of any the Merged Firm's ILEC territory;

b. Current contracts between other access customers (including the Merged Firm's and other RBOCs' wireless and wireline affiliates) and (i) the Merged Firm or (ii) other access services providers (contracts with other service providers are due the strongest evidentiary weight pursuant to paragraph II.C.3 above), whether or not covering all or part of any the Merged Firm's ILEC territory;

c. As to disputes concerns non-price terms and conditions, evidence of the type and quality of services provided by (i) the Merged Firm or (ii) other access services providers (the conduct of non-ILEC service providers are due the strongest evidentiary weight pursuant to paragraph II.C.3 above)

d. Evidence of the relative value or costs of the requested Merged Firm services compared to the services of other access services

providers or the services provided by the Merged Firm in other territories (*i.e.*, price, scope of service, quality of service, etc.);

e. Evidence of rates, terms and/or conditions for retail services; and

f. The effect of specific terms and conditions on the competitive supply and demand for special access services.

5. In determining commercial reasonableness, the Arbitrator may not consider other offers for the access at issue made prior to the arbitration by the Requesting Customer or the Merged Firm.

6. If a party refuses to provide any relevant evidence in its possession, the Arbitrator shall draw an adverse inference regarding the commercial reasonableness of the party's offer. Relevant evidence in categories listed in paragraphs II.C.3 and 4(a)-(f) above which is subject to confidentiality, non-disclosure or other restrictive clauses shall be provided only to outside counsel for both parties (but not in-house counsel or employees) under protective order procedures ("Arbitration Protective Order Procedures") similar to those set forth in the Commission's regulations governing transfer of control proceedings.

7. Any contracts with non-ILEC wholesalers or other relevant evidence submitted by the Requesting Customer or the Merged Firm may be designated by it as available for Future Protective Order Disclosure. Future Protective Order Disclosure shall mean that the evidence will be provided (either through storage in a secure central clearinghouse or by the Requesting Customer or Merged Firm) under Arbitration Protective Order Procedures to outside counsel for the Merged Firm and other Requesting Customers in future arbitrations.

8. A public version of each Arbitrator's decision shall be filed with the Commission along with a public version of the executed contract between the parties. The executed contract shall be filed as a contract tariff pursuant to the requirements applicable to Phase I pricing flexibility volume-term special access service agreements.

9. The parties may agree to modify any of the time limits and any of the procedural rules of the arbitration. Absent such agreement, the rules specified herein apply. The parties may not, however, modify either the requirement that they engage in final offer arbitration or the rules governing availability of relevant evidence or the contract resulting from the Arbitration.

10. The Merged Firm agrees to waive its right to invoke confidentiality, non-disclosure, or other restrictive clauses in any of its relevant contracts for access services to the extent necessary to make information available to the Requesting Customer's outside counsel, and agrees to seek in good

faith any necessary waivers of such clauses from other parties to any such contracts, in order to make the contracts available in unredacted form to outside counsel for the Requesting Customer under protective order in the arbitration.

11. If the Arbitrator finds that one party's conduct during the course of the arbitration has been unreasonable, the Arbitrator may assess all or a portion of the other party's costs and expenses (including attorney fees) against the offending party and may consider such behavior in assessing the reasonableness of the offers.

12. Following the decision of the Arbitrator, the terms of the new access agreement, including payment terms, will become retroactive to the expiration date of the previous agreement. The Requesting Customer will make an additional payment to the Merged Firm in an amount representing the difference, if any, between the amount it must pay under the Arbitrator's award and the amount it actually paid under the terms of the expired contract during the period of arbitration. Similarly, the Merged Firm shall issue a refund in an amount representing the difference, if any, between the amount to be paid under the Arbitrator's award and the amount actually paid under the terms of the expired contract during the period of arbitration.

13. The result of the arbitration shall be binding on the parties, and judgment on the Arbitrator's award may be entered in any court having jurisdiction.

14. Except as provided in paragraph II.C.11 above, each party shall pay its own fees and costs, and the parties shall split the Arbitrator's fees and costs equally.

15. The Arbitrator's decision shall be reviewable by the Commission. The Commission shall only overturn an arbitrator's decision if the Commission concludes that the decision was arbitrary or capricious.

16. All rates yielded by arbitrated contracts shall be excluded from price caps.

D. Expedited Commercial Arbitration Process. The following expedited arbitration mechanism shall be established for resolving disputes arising under any special access service agreement (both those that are the result of the arbitration process described in section C above and those negotiated without resort to arbitration) or tariff offering of the Merged Firm. The regulations governing such expedited arbitration are as follows.

1. A Requesting Customer that is a party to any special access service agreement or that purchases services pursuant to any general tariff offering of the Merged Firm shall have the right to invoke expedited commercial

arbitration to resolve disputes that arise under the agreement or general tariff offering; such arbitration shall include a right to a damage remedy.

2. In the expedited arbitration, the third party arbitrator shall render a binding decision within 120 days of the date of invocation of the arbitration process.

3. The expedited arbitration will be decided by a single Arbitrator mutually agreed to by the parties or selected by the AAA from members of its Telecommunications Panel and shall be conducted under the expedited procedures of the AAA Commercial Arbitration Rules, excluding the rules relating to large, complex cases. The location of the arbitration shall be selected by the Requesting Customer from among Atlanta, Chicago, Dallas, Denver, New York, Washington D.C., and Los Angeles.

4. If a party refuses to provide any relevant evidence in its possession, the Arbitrator shall draw an adverse inference as to the issue(s) to which it is relevant. Relevant evidence which is subject to confidentiality, non-disclosure or other restrictive clauses shall be provided only to outside counsel for both parties (but not in-house counsel or employees) under protective order procedures ("Arbitration Protective Order Procedures") similar to those set forth in the Commission's regulations governing transfer of control proceedings.

5. A public version of each Arbitrator's decision shall be made immediately available on the Merged Firm's website and shall remain available there so long as the underlying contract is in effect.

6. The parties may agree to modify any of the time limits and any of the procedural rules of the arbitration. Absent such agreement, the rules specified herein apply. The parties may not, however, modify the requirement that they engage in arbitration.

7. The result of the arbitration shall be binding on the parties, and judgment on the Arbitrator's award may be entered in any court having jurisdiction.

8. If the Arbitrator finds that one party's conduct during the course of the arbitration has been unreasonable, the Arbitrator may assess all or a portion of the other party's costs and expenses (including attorney fees) against the offending party. Otherwise, each party shall pay its own fees and costs, and the parties shall split the Arbitrator's fees and costs equally.

9. The Arbitrator's decision shall be reviewable by the Commission. The Commission shall only overturn an arbitrator's decision if the Commission concludes that the decision was arbitrary or capricious.

E. Duration. The arbitration conditions shall remain in effect until the later of seven years after the closing date of the merger or the release of a final order addressing the appropriate rate regulation of special access services in WC Docket No. 05-25.

III. Prohibited Contract Terms

A. In General. In connection with the provision of special access service, the Merged Firm shall be prohibited from enforcing any condition that is not reasonably related to the efficiencies yielded by volume and/or term commitments. This condition shall continue to apply until the later of seven years after the closing date of the merger or the release of a final order addressing the appropriate rate regulation of special access services in WC Docket 05-25.

B. Examples of Prohibited Conditions. Provisions prohibited by this condition include, but are not limited to, those requiring that a customer (i) purchase a percentage of a customer's total special access service spend from the Merged Firm, (ii) purchase products or services other than special access from the Merged Firm, (iii) not purchase certain products or services (including but not limited to UNEs), not use certain technologies, or not use the service of other providers, and (iv) increase its volume of purchases in order to avoid financial or other penalties where such penalties exceed the loss of discounts associated with the increased volume (e.g., the elimination of discounts on all circuits under the agreement if the purchaser fails to increase its volume in a particular year by five percent).

IV. Availability of Special Access Service Contract or Tariff Arrangements Throughout the Merged Firm's Territory.

The Merged Firm shall permit a customer to "port" the entirety of an existing special access service plan or commercial agreement (except for state-specific rates) from a state in the Merged Firm's territory where it currently is effective to any other state in the Merged Firm's territory. This condition shall continue to apply until the later of seven years after the closing date of the merger or the release of a final order addressing the appropriate rate regulation of special access services in WC Docket No. 05-25. Any condition of a ported plan or agreement that is prohibited under condition III shall not be enforceable.

V. Fresh Look for Existing Special Access Service Customers.

All purchasers of special access service from the Merged Firm shall be entitled to void their existing special access service contract(s) or tariff arrangement(s) if they so choose within one year of the merger closing without the application of any penalties for early termination. A purchaser may only exercise its fresh look right once per contract or tariff arrangement.

VI. Forbearance Prohibition.

The Merged Firm agrees that any grant of Forbearance under Section 10 of the Communications Act, as amended, shall not diminish, alter or in any way affect the Merged Firm's obligations or responsibilities under these merger conditions.