Bellcore

Bell Communications Research

Customer Billing & Information Systems

NEWSLETTER

NP-RGS-000009
Issue: 90-111
Date: April 30, 1990

Contact: J. E. Dahlin (201) 699-7903
Project No 480200 (Customer Billing Systems)

Customer Record Information System

To: District Level Staff Managers - CRIS Message Processing

Subject: **Card Issuer Identifier (CIID) Processing Guidelines**

Attached for your information and review is a copy of the Card Issuer Identifier (CIID) Processing Guidelines. This revision incorporates suggestions made at the March CIID Billing Workshop in St. Louis. Please refer questions and comments to me on (201) 699-7652 or to Jim Dahlin.

Information contained in this Newsletter is of interest to **Independent Exchange Carriers**. Accordingly, we have requested the Bellcore Exchange Carrier Relations organization to distribute copies of this Newsletter to their contacts.

W R Micou

W. R. Micou
District Manager
Message Processing

Attachment

Copy to: **Fourth Level Billing Contacts**
Message Exchange Technical Review Group
P. C. Nowak

LOVERN - SUPPLEMENTAL BRIEF

EXHIBIT H

1. Background

The "Card Issuer Identifier" CIID card has been developed in response to an Industry desire for a telecommunications use only, 14-digit non-line-number-based credit card in the "10+4" format. That is, a 10-digit special billing number plus a 4-digit personal identification number (PIN).

The assignment and control of CIIDs are centrally administered by Bellcore in accordance with Bellcore Special Report SR-BDS-001511, Administration Guidelines for Card Issuer Identifier (CIID).

This document addresses distribution, billing and settlement issues that arise when a CIID card is used for billing LEC [1] provided services (i.e. intra-LATA toll, local messages, Directory Assistance, etc.)

It assumes that arrangements exist that allow the LEC operator to validate the CIID.

2. Card Issuer Identifiers

Bellcore will publish a list of CIIDs along with an identification of the assigned entity, the validation data base used and the billing agent/host. This information will be published as products of the Bellcore Rating Administrative Data System (BRADS) as follows:

- For local exchange carrier use:
  - Terminating Point Master (TPM) tape (as a separate CIID data set)
  - Operating Telephone Company Numbering Plan Guide (OTCNPG) microfiche

- For interexchange carrier use:
  - NPA/NXX V&H Coordinates tape (as a separate CIID data set)
  - Industry Numbering Plan Guide (INPG) microfiche

See attachment 1 for format of BRADS Data Set for CIID Information. (Note: if the Card Issuer does not have a CMDS Host / CMDS Collector, field 16 - Billing Agent / Host RAO Code will be zeros).

REFERS TO Caribbean LEC
AT&T "joint use card"

1. For the purpose of this paper, the term Local Exchange Carrier (LEC) is used to identify all local companies including Bellcore Client Companies (BCC). The term BCC however, is used to identify only local companies that are also CMDS participants.

PROPRIETARY – BELLCORE AND AUTHORIZED CLIENTS ONLY
This document contains proprietary information that shall
be distributed or routed only within Bellcore
and its authorized clients, except
with written permission of Bellcore.

3. **Format of the Card Issuer Identifier**

The Card Issuer Identifier (CIID) is a six-digit code.

The format of the CIID when used as part of a 14-digit telecommunications billing card is as follows:

NXXWXX	Card Issuer Identifier (assigned by Bellcore) [2]
XXXX	Customer Account Number (assigned by the card issuer)
(NXXX)	Personal Identification Number (PIN) (assigned by the card issuer)

where: N = 2 through 9

X = 0 through 9

W = 0 or 1 [4]

Example: 825001 2345 (6789)

In the above example the Billing Number in the EMR would be formatted as follows:

RAO	NPA	NXX	LINE
825	000	001	2345

Also, as with other messages that are charged to a Special Billing Number or Special Calling Card, indicator 11 should have a value of 4.

4. **AMA Recording**

The Operator Services Systems (OSSs) do not record the first three digits of a Special Calling Card number. That is, the Billing NPA field of an OSS AMA record contains zeros.

---

2. In order to avoid any confusion with the CCITT telecommunications credit card, no assignments will be made beginning with "88" or "89".
3. This PIN is only used for validation and is never considered a part of the Customer Account Number. It is never to be recorded or included in message billing records.
4. A zero (0) or one (1) is required in the fourth digit of the card number to avoid any conflict with a Numbering Plan Area (NPA)-NXX format. This results in the issuer-assigned Customer Account Number being limited to four (4) digits. Therefore, 10-digit-telephone-number-based billing cards cannot be issued using this CIID format.

For a local exchange carrier (LEC) special calling card, the format is RAO-0/1XX-XXXX-PINN. The RAO code is loaded by the DBAS into the "Billing RAO" field of the BVA/LIDB. This code is returned in the inquiry response to the OSS and is recorded in the "Billing RAO" field of the OSS AMA tape. While the entire 10-digit billing number is available to the OSS, only the last seven digits are recorded (i.e., the billing number field contains "000" in the Billing NPA, "0/1XX" in the Billing NXX, and "XXXX" in the Billing Line Number).

The CIID is a six-digit code identifying the card issuer and is in the format NXXWXX. The first three digits are "lost" on the OSS AMA tape.

Until the OSS software can be changed to record all digits, the solution to this problem is to have the DBAS continue to populate the "Billing RAO" field in the BVA/LIDB with the first three digits of the card number. This information would then record in the "Billing RAO" field of the OSS AMA tape as it does today for LEC calling cards.

Care should also be taken that the CIID is recognized as a CIID and that the process of subtracting "600" from the recorded Billing RAO of a Special Calling Card (RAO Calling Card) is not followed. (For RAO Calling Cards, "600" is subtracted from the RAO if the RAO is greater than "599". To prevent this from happening to a CIID the process should be limited to RAOs greater than "599" but less than "800").

5. **Message Distribution**

The method for distribution of messages can either be local or by using CMDS. If a local distribution process such as mailing of tapes or transmitting directly to an Interexchange Carrier (IC) is used, the settlement process will also be a local one.

- Format requirements for local (non CMDS) message distribution:
  - Message
    - Billing Entity: 000
    - Indicator 5 (ICS): 1
    - Indicator 11 (Billing Number Characteristics): 4 (Special Calling Card)
    - Indicator 19 (LATA): 1 or 3
    - Indicator 23 (Type of Credit Card): 4 (CIID)
    - Message Type: 3 (Credit Card)
  - Pack Header and Trailer
    - Record ID: 20-22-01, 02
    - Send to RAO: 000
    - From RAO: From RAO associated with originating LEC
    - Carrier Identification: Billing Entity or Alternate Billing Entity associated with Carrier

PROPRIETARY – BELLCORE AND AUTHORIZED CLIENTS ONLY
See proprietary restrictions on title page.

AT&T messages can be settled two ways; CATS or PARIS

- If CMDS is used there are two centralized, Bellcore supported, settlement systems that are available: BCC CATS (Credit Card and Third Number Settlement System) and PARIS (Purchase of Accounts Receivable Information System).

"will not be uniquely identified" is how the use of CATS is disguised.

BCC CATS establishes the originating BCC as the earning entity and the host BCC as the billing entity. Settlement information will be included along with the regular BCC CATS detail and will not be uniquely identified.

PARIS also establishes the originating BCC as the earning entity but the billing entity is the IC as identified by the issuer code in the message. PARIS reports will be broken out the same as BCC CATS reports (by BCC and by Independent Company).

- Format requirements for message inclusion in BCC CATS:
  - Message
    - Billing Entity: 000
    - Indicator 5 (ICS): 1
    - Indicator 11 (Billing Number Characteristics): 4 (Special Calling Card)
    - Indicator 19 (LATA): 1 or 3
    - Indicator 23 (Type of Credit Card): 4 (CIID)
    - Message Type: 3 (Credit Card)
  - Pack header and trailer
    - Record ID: 20-20-01, 02
    - Send to RAO: Send to RAO associated with host
    - From RAO: From RAO associated with originating LEC
- Format requirements for message inclusion in PARIS:
  - Message
    - Billing Entity: 000
    - Indicator 5 (ICS): 1
    - Indicator 11 (Billing Number Characteristics): 4 (Special Calling Card)
    - Indicator 19 (LATA): 4 or 6
    - Indicator 23 (Type of Credit Card): 4 (CIID)
    - Message Type: 3 (Credit Card)
  - Pack header and trailer
    - Record ID: 20-20-01, 02
    - Send to RAO: Send to RAO associated with host
    - From RAO: From RAO associated with originating LEC

PROPRIETARY — BELLCORE AND AUTHORIZED CLIENTS ONLY
See proprietary restrictions on title page.

Formatting being the same helps in hiding process

- **Returned Messages**

It is expected that a Host BCC will perform certain edits in the process of accepting messages on behalf of their client IC. In today's BCC CATS process, unbillable messages that are returned from the billing company to the originating company cause a revenue reversal on the settlement reports. This process will apply to messages that were charged to CIID cards regardless if the settlement process is BCC CATS or PARIS. Formatting requirements are the same as for current BCC CATS returns:

Indicator 3 (Return/Rebill): 1
Indicator 5 (ICS): 2 (Return)
Return Code: Appropriate Value

- **Billing of Messages**

Three (3) options for billing consumer

Options for billing the end user include the IC directly billing the customer (in which case the LEC is no longer involved) or the IC forwarding the message to a LEC for billing. If billing is done by the LEC, the IC will have to replace the Issuer Code in the message with a valid Billing Number.

In cases where the LEC bills the end user, the message could appear on either the IC page of the bill or on the LEC page. A message that appears on the IC page of the bill would fall under Billing and Collecting agreements between the IC and LEC and could be sent to the billing LEC via CMDS using the following format criteria:

Format requirements for messages sent via CMDS to a LEC for billing (to appear on IC bill page):

Format for IC or AT&T transported call

- Message
  - Billing Entity: Carriers
  - Indicator 5 (ICS): 0
  - Indicator 19 (LATA): 2 or 5
  - Indicator 23 (Type of Credit Card): 4 (CIID)
  - Message Type: 3 (Credit Card)

- Pack header and trailer
  - Record ID: 20-22-03, 04
  - Send to RAO: Send to RAO Associated with Billing LEC
  - From RAO: Host RAO

Explains how calls transported by carriers other than AT&T lost their money because messages were returned marked unbillable, yet collected on behalf of AT&T

An IC that chooses not to purchase the messages from the LEC (i.e. BCC CATS was used for initial settlement) can choose to use BCC CATS to reverse the transaction. Under this arrangement messages would be sent via CMDS, after billing number translation, to the billing LEC and would appear on the LEC page

of the bill.

Format requirements for messages to appear on the LEC bill page (original settlement was via BCC CATS):

LEC transported call

- Message
  - Billing Entity: 000
  - Indicator 5 (ICS): 1
  - Indicator 19 (LATA): 1 or 3
  - Indicator 23 (Type of Credit Card): 4 (CIID)
  - Message Type: 3 (Credit Card)

- Pack header and trailer
  - Record ID: 20-20-01, 02
  - Send to RAO: Send to RAO associated with Billing LEC
  - From RAO: Host RAO

Note: If the IC purchased the message using PARIS, the transaction cannot be reversed using PARIS. If the LEC bills the message it must be on the IC's page of the bill.

- Cancel/Correction Records

Cancel and Correction records (Category 51 and 71) are used to "adjust" BCC CATS. Cancel records reduce the amount earned and correction records increase the amount earned (the same as Category 01 billing records). This same process will apply to PARIS.

- **Tax Issues**

For the purpose of this discussion, two terms need to be defined:

"Foreign" state tax - This refers to taxes that apply to a call that is billed to a customer in a state that is different from the state in which the call originated. "Foreign" state tax is calculated by the originating company during the rating process and the amounts are populated in the individual messages. This process is used because the "foreign" billing company does not know what taxes are applicable from the originating company.

"Home" state tax - This refers to the taxes that apply to a call that is billed to a customer in the same state that the call originated. The application of "home" state tax is done at the time the messages are billed. This calculation is applied to all qualifying messages as a group.

The 14 digit credit card is geographically specific, therefore, the determination as to whether a message is foreign or home billed can be made. The CIID credit card, however, is not geographically specific. Therefore, the rating company will always have to populate the applicable tax fields. After the message goes to the IC and the issuer code is translated into a billing telephone number (BTN), if this message ends up going back to the same jurisdiction for billing where it was originated and rated, the "foreign" tax in the record must be recognized as a "home" tax and treated accordingly.

- **Independent Company Issues**

It seems reasonable to expect that CIID cards will be issued to customers of local exchange carriers. As is the case with the BCCs, business arrangements will have to be made between the local exchange carrier and the IC for validation and billing. There are also agreements between the local exchange carrier and the BCC that may need modifying.

It is possible that card honoring agreements will have to be modified where operator services are provided by the BCC to a local exchange carrier (or visa versa). There could also be impacts on arrangements between BCCs and local exchange carriers for message provisioning. For example, a call could be validated and recorded by a local exchange carrier and sent to the BCC for submission to CMDS. In this situation the BCC would also have to have established agreements with the IC to properly handle the message distribution. Another example is the distribution of translated messages from the IC's host to the local exchange carrier for billing. Agreements would have to be in place between the local exchange carrier and the BCC to allow the distribution of a variety of different carriers messages (after purchase) that are being sent via CMDS, through an interfacing BCC, to the billing local exchange carrier.

- **Host Responsibilities**

LEC transported call

The CMDS Host collects CIID billed messages that are recorded by the different LECs and forwarded via CMDS. As is stated in the "Returned Messages" section of this paper, it is expected that the Host BCC will perform certain edits on the messages. Messages that fail these edits could be returned to the originating LEC as unbillable. Messages that are accepted by the Host are forwarded from the Host to the IC. For messages that were settled using BCC CATS, the Host will have to have a subsequent settlement process with the IC (since BCC CATS identified the Host as "Billing Company" on the BCC CATS reports and thus the Host owes all of the originating LECs for the messages). If PARIS was used as the settlement process, there is no subsequent revenue settlement required between the Host and the IC (with the exception of messages that originated within the Host's territory). Under both of the above scenarios, the Host is

This refers to collecting money for AT&T

performing a provisioning service for the IC.

For messages that are to be billed by the LECs, the Host collects the messages from the IC and forwards them to the billing company via CMDS. The Host should perform edits to insure that the messages are coded (or recoded) and packed correctly for submission into CMDS. If the messages are to be billed on the IC's page of the bill (billing entity is the IC's), there is no further BCC CATS or PARIS involvement. If the messages are to be billed on the LEC bill page (billing entity is 000), the Host will need to have a settlement arrangement with the IC due to the fact that the Host will be credited with the revenue by BCC CATS. As in the process of receipting messages, the Host is performing a provisioning service in the sending of messages for the IC.

AT&T or IC transported call

BCC (Bellcore client co.)

you only need settlement arrangement with AT&T if AT&T transports the call which means the money belongs to them.

This explains how the (9) BCCs are to settle IC or AT&T transported calls charged to AT&T CIID or joint use cards. (NOTE) If the call was to go on the LEC portion of the bill, [AT&T's option]see pg. 5 BCC is instructed to code (billing entity with"000" even though an IC transported the call

****YOU MUST KEEP IN MIND THERE ARE NO OTHER 100% accepted IC cards other than AT&T.

THE USE OF THE WORD POTENTIAL IS JUST A PLOY AS THIS DOCUMENT WAS RELEASED AFTER INSTRUCTIONAL BULETINS WERE RELEASED BY BELLCORE. IT'S PART OF THE "SHELL GAME."

POTENTIAL BCC SETTLEMENT ARRANGEMENTS WITH IC CIID CARD ISSUERS

LOVERN SUPPLEMENTAL BRIEF

EXHIBIT I

INCLUDING INDEPENDENT EC ORIGINATED INTRALATA CALLS

BILLED TO A CIID CARD

The introduction of CIID cards will enable LEC customers to bill intralata calls carried over LEC facilities to an IC's CIID card. This has led to the development of several new potential settlement arrangements between the BCCs and IC CIID card issuers which are described on the following pages. Bellcore's Customer Billing & Information Systems group has already designed a new tracking system (PARIS) and made modifications to BRADS and the EMR/EMI records in support of these new arrangements. Copies of these documents are attached for your review.

The potential settlement arrangements between BCCs and IC CIID card issuers are depicted in Figures 1, 2 & 3 and are further described in the following paragraphs.

1. POTENTIAL "BCC CATS" SETTLEMENT ARRANGEMENTS WITH CIID CARD ISSUERS - NO PURCHASE OF ACCOUNTS RECEIVABLE

   Figure 1 shows a settlement arrangement that represents an extension of today's BCC Calling Card and Third Party Billing System (BCC CATS). LEC intralata calls billed to a CIID card are passed through BCC CATS twice with an intervening step in which the Billing Number translation is performed by the IC. An IC CIID card issuer that does not have billing and collection agreements with all the LECs and does not wish to purchase intralata messages billed to its CIID cards from the LECs would be a candidate for this arrangement.

   The BCC and the IC CIID card issuer would have to develop a suitable procedure for performing the billing number translation function and returning the messages to BCC CATS for final billing. The IC CIID card issuer would also have negotiate with the various LECs providing operator service functions to accept, validate and properly record its CIID messages. These messages would have to be earmarked for inclusion in BCC CATS for the process to work.

   The settlement arrangement shown in Figure 1 operates as follows. Intralata messages carried by a LEC and billed to a CIID card are treated as LEC revenue. In the first pass through CATS the originating/earning LEC is credited with the revenue and taxes less the 5 cent billing charge and the billing company is debited a like amount. However, at this point several additional steps are taken. The billing company is also acting as the BCC CIID CMDS host and is responsible for delivering the messages to the IC for Billing Number translation and then returning the messages via CMDS and CATS to the intended billing location. In the second pass through CATS the BCC CIID CMDS host becomes the earning company and the intended billing location becomes the billing company. The host is credited with the revenue and taxes less the 5 cent billing charge and the billing company is debited a like amount.

PROPRIETARY - BELLCORE AND AUTHORIZED CLIENTS ONLY
This document contains proprietary information that shall be distributed or routed only within Bell Communications Research (Bellcore) and its authorized clients

These CIID messages would appear on the LEC page of the bill. CIID card issuers which desire to have their calls appear on a separate page of the bill would have to enter into billing and collection agreements with the LECs. They would then employ the settlement arrangements shown in Figures 2 & 3.

2. POTENTIAL "BCC CATS" SETTLEMENT ARRANGEMENTS WITH CIID CARD ISSUER PURCHASING ACCOUNTS RECIEVABLE

Figure 2 also treats intralata messages carried by a LEC and billed to a CIID card as LEC revenue. In the first pass through CATS the revenue and taxes are credited to the earning company less the 5 cent billing charge and a like amount is debited to the billing company which is also the BCC CIID CMDS host. The host then accumulates the CIID billable messages and sells them to the IC CIID Card Issuer, thereby recovering the BCC CATS indebtedness. very import

This is the first step in the arrangement and may conclude the process if the IC bills its own customers. A somewhat similar arrangement exists today between Cincinnati Bell and AT&T, in which Cininnati Bell is host to AT&T's Stargate operation. AT&T has issued Special Billing Number (SBN) calling cards using the 308 & 677 RAO codes. Intralata calls billed to these AT&T SBN cards are directed via CMDS and CATS to Cincinnati Bell's host RAO location. Cincinnati Bell settles with the originating companies through CATS and then sells the messages to AT&T. In this case, Cincinnati also does the billing for AT&T. 07

The IC CIID card issuer, having purchased the accounts receivable from the BCC CIID CMDS host and performed the billing number translation may chose to return the billable messages to the LECs for billing using one or both of the following methods.

1. Where the IC has no Billing & Collection agreement with the billing LEC, it may opt to return the messages via BCC CATS. In this case the billable messages are earmarked for CATS and resold to the BCC CIID host which then reenters them into CMDS and BCC CATS. The revenues and taxes are credited to the host less the 5 cent billing charge and a like amount is debited the billing company. The CIID messages appear on the LEC page of the bill.

2. Where the IC has a Billing & Collection agreement with the LEC, it may opt to return the billable messages to the billing LEC via CMDS but not through CATS. In this case the billing company would repurchase the messages directly from the IC. The messages would not be earmarked for CATS and the BCC CIID host would simply retransmit the messages via CMDS on behalf of the IC. These messages would appear on the IC page of the bill.

PROPRIETARY - BELLCORE AND AUTHORIZED CLIENTS ONLY
This document contains proprietary information that shall be distributed or routed only within Bell Communications Research (Bellcore) and its authorized clients, except with written permission of Bellcore.

3. POTENTIAL "PARIS" SETTLEMENT ARRANGEMENTS WITH CIID CARD ISSUER PURCHASING ACCOUNTS RECIEVABLE

   In Figure 3, intralata calls carried by a LEC and billed to a called Purchase of Accounts Receivable Information System (PARIS). The PARIS reports treat the originating LEC as the earning company and the IC CIID card issuer as the billing company. The revenue and taxes are credited to the originating LEC (earning company) and the IC CIID card issuer (billing company) is debited a like amount. The PARIS reports provide a vehicle for the IC to purchase the accounts receivable directly from the originating/earning company. The BCC CIID host is not involved in the initial settlement process.

   The CIID card issuer , having purchased the accounts receivable via PARIS and performed the billing number translation may chose to bill its customers directly or return the billable messages under the same two options described in Figure 2 depending on whether or not Billing & Collecting agreements exist.

These potential serving arrangements are intended to provide a basis for determining which solution best meets the needs of each BCC and the Independents it hosts onto CMDS.

PCN 5/7/90

PROPRIETARY - BELLCORE AND AUTHORIZED CLIENTS ONLY
This document contains proprietary information that shall be distributed or routed only within Bell Communications Research (Bellcore) and its authorized clients, except with written permission of Bellcore.

FIGURE 1

POTENTIAL "BCC CATS" SETTLEMENT ARRANGEMENTS WITH CIID CARD ISSUERS

CIID CARD ISSUER DOES NOT PURCHASE ACCOUNTS RECEIVABLE

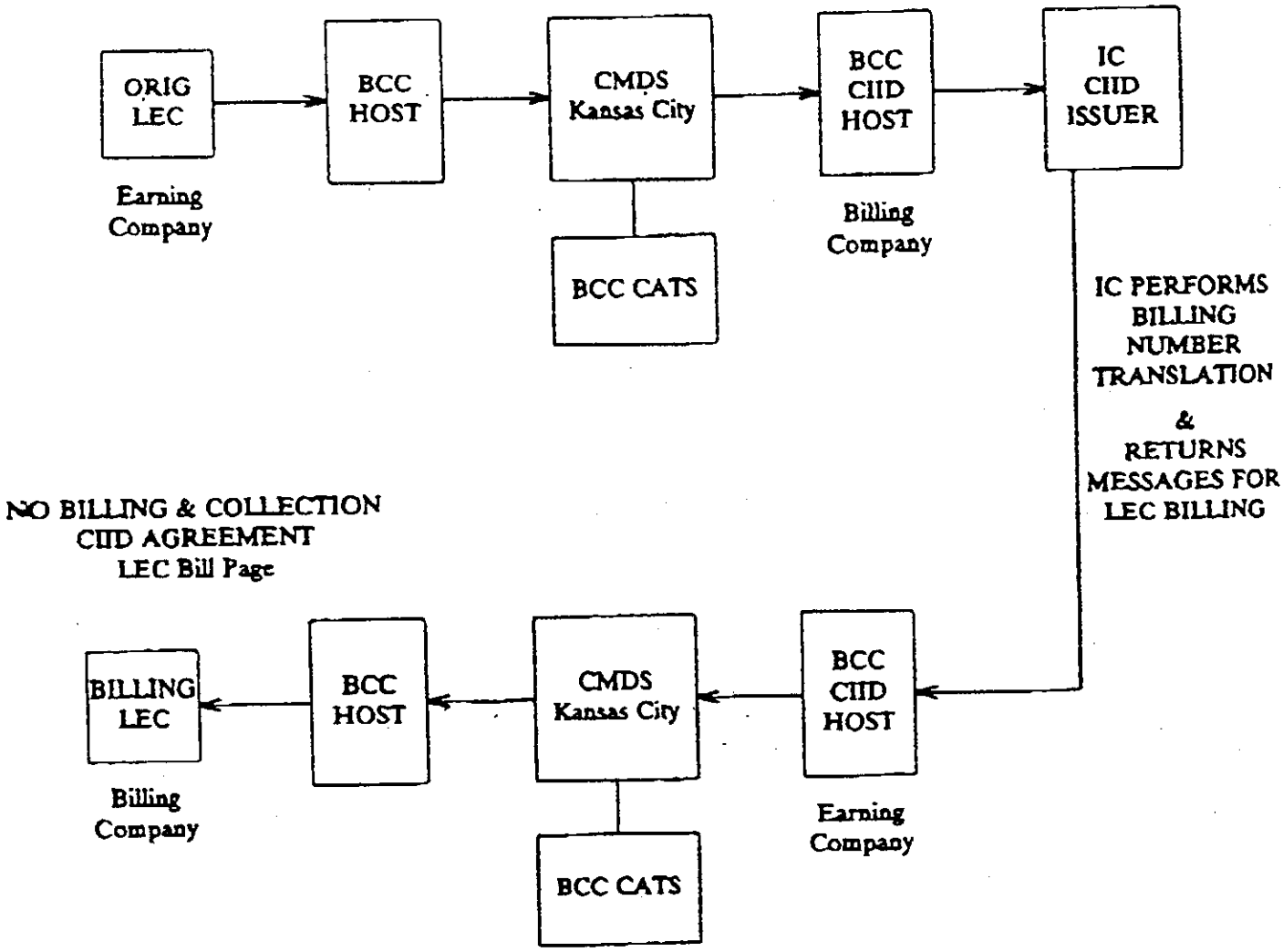

PROPRIETARY - BELLCORE AND AUTHORIZED CLIENTS ONLY
This document contains proprietary information that shall be distributed or routed only within Bell Communications Research (Bellcore) and its authorized clients, except with written permission of Bellcore.

FIGURE 2

POTENTIAL "BCC CATS" SETTLEMENT ARRANGEMENTS WITH CIID CARD ISSUERS

CIID CARD ISSUER PURCHASES ACCOUNTS RECEIVABLE

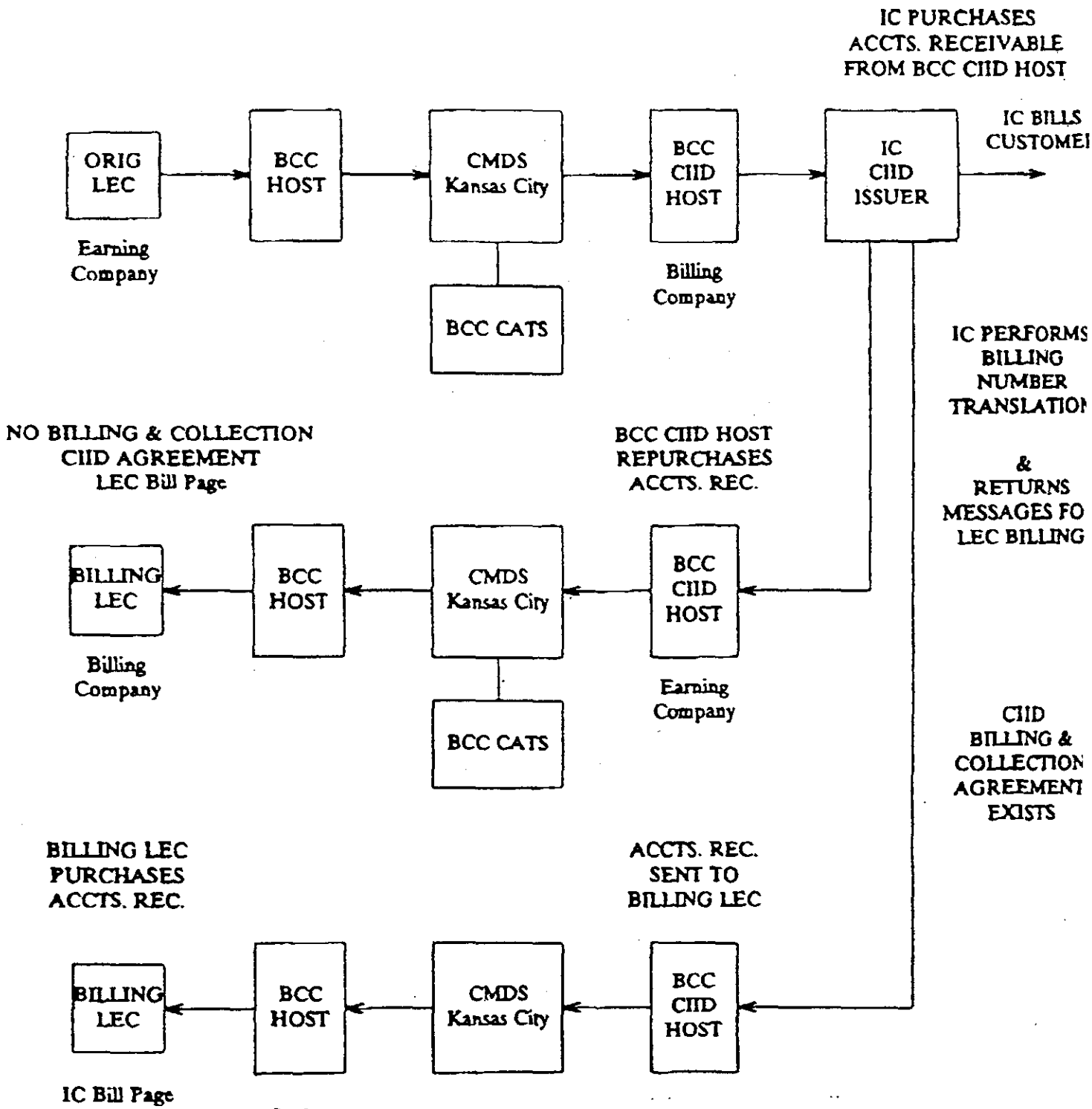

PROPRIETARY - BELLCORE AND AUTHORIZED CLIENTS ONLY
This document contains proprietary information that shall be distributed or routed only within Bell Communications Research (Bellcore) and its authorized clients, except with

FIGURE 3

POTENTIAL "PARIS" SETTLEMENT ARRANGEMENTS WITH CIID CARD ISSUERS

CIID CARD ISSUER PURCHASES ACCOUNTS RECEIVABLE

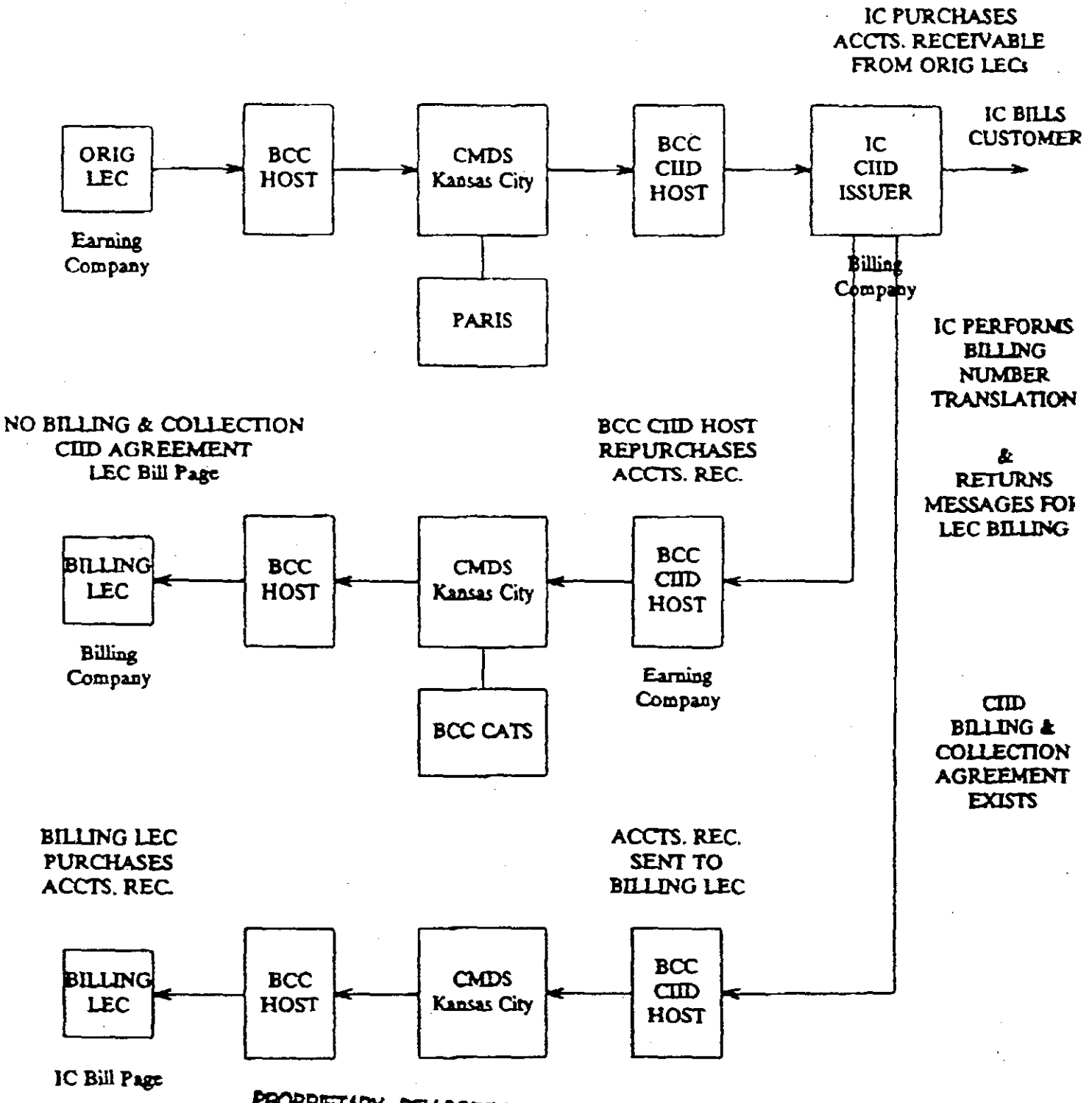

PROPRIETARY - BELLCORE AND AUTHORIZED CLIENTS ONLY
This document contains proprietary information that shall be distributed or routed only within Bell Communications Research (Bellcore) and its authorized clients.

Indicator 19 - LATA Identifier

VALUE	INDICATES	DEFINITION
0	Not Applicable	Valid only for unrated (Cat. 10) and Telegram Records (01-01-14).
1	IntraLATA - Exchange Carrier Message	Indicates that the message originated and terminated within the same LATA and was carried by an Exchange Carrier. Revenue belongs to the Exchange Carrier.
2	InterLATA - Interexchange Carrier Message	Indicates that the message originated in one LATA and terminated in another LATA and was carried by an Interexchange Carrier. Revenue belongs to the Interexchange Carrier.
3	InterLATA - Exchange Carrier Message	Indicates that the message originated in one LATA and terminated in another LATA and was carried by an Exchange Carrier (Corridor Traffic). Revenue belongs to the Exchange Carrier.
4	InterLATA - Exchange Carrier Message Purchased by Interexchange Carrier	Indicates that the message originated in one LATA and terminated in another LATA and was carried by an Exchange Carrier (Corridor Traffic). However, the revenue belongs to an Interexchange Carrier due to purchase of accounts receivable.
5	IntraLATA - Interexchange Carrier Message	Indicates that the message originated and terminated within the same LATA and was carried by an Interexchange Carrier. Revenue belongs to the Interexchange Carrier.
6	IntraLATA - Exchange Carrier Message Purchased by Interexchange Carrier	Indicates that the message originated and terminated within the same LATA and was carried by an Exchange Carrier. However, the revenue belongs to an Interexchange Carrier due to purchase of accounts receivable.
7	IntraLATA - Interexchange Carrier Message Purchased by Exchange Carrier	Indicates that the message originated and terminated within the same LATA and was carried by an Interexchange Carrier. However, the revenue belongs to an Exchange Carrier due to purchase of accounts receivable agreement.
8	InterLATA - Interexchange Carrier Message Purchased by Exchange Carrier	Indicates that the message originated in one LATA and terminated in another LATA and was carried by an Interexchange Carrier. However, the revenue belongs to an Exchange Carrier due to purchase of account receivable agreement.
9	Not determined.	Indicates that the LATA was not determined. (Valid on Category 11 records only).

MR MANUAL

ONLY AT&T enjoys this luxury. This type of MESSAGE CAN GO on AT&T's bill page or the LEC bill page

PROPRIETARY – BELLCORE AND AUTHORIZED CLIENTS ONLY
See proprietary restrictions on title page.

LOVERN SUPPLEMENTAL BRIEF

EXHIBIT J

Bellcore

© Bell Communications Research

Customer Billing & Information Systems

NEWSLETTER

NP-RGS-000009
Issue: 93-173
Date: August 18, 1993

Contact: V. A. Basinski (201) 740-4175
Project No. 480200 (Customer Billing Support)

To: Third Level Billing Contacts - CRIS Message Processing

Subject: Card Issuer Identifiers (CIIDs)

Attached is an updated listing of all Card Issuer Identifier (CIID) codes assigned to date. (For additional information regarding CIIDs, see Bellcore Special Report SR-OPT-001511, Issue 3, November 1992.)

Revisions will be reflected on the Bellcore Rating Administrative Data System (BRADS) CIID data set on the September 1993 products.

Information contained in this Newsletter is of interest to Independent Exchange Carriers. Accordingly, we have requested the Bellcore Exchange Carrier Relations organization to distribute copies of this Newsletter to their contacts.

If you have any questions, please call me (201-740-4179) or Vic Basinski (201-740-4175).

W P Howdle

For Yvonne C. Reigle
Director - Billing Services

Attachment

Copy to: Client Company Billing Contacts (w/o Attachments)
ABS Billing Subcommittee
Message Exchange Technical Review Group
P. C. Nowak
E. R. Rodriguez

LOVERN SUPPLEMENTAL BRIEF

EXHIBIT K

308
503
506
507
508
677

ALL MATCH ORIGINAL RAO CARDS

Card Issuer Identifier (CIID) Assignments

(All new/revised information is highlighted and marked with a |)

August 5, 1993

Card Issuer	CIID(s)	Card Issuance Date(s)	Validation Data Base Operator	Billing Agent/Host	CMDS Host Code	Latest BRADS Activity
Allnet Communication	444001-444177	7/91	Allnet	(TBD)	(N/A)	10-15-90
AT&T Communications	308001-308199	7/90	AT&T	Cincinnati Bell	308	12-15-91
	503001-503199	|	|	BellSouth (CHW)	503	12-15-91
	506001-506199	|	|	| Barbados	506	12-15-91
	507001-507199	|	|	| Granada	507 (CHW)	12-15-91
	508001-508199	|	|	| Trinidad & Tobago	508	12-15-91
	677001-677121	|	|	Cincinnati Bell	308	12-15-91
	677124-677125	|	|	|	|	12-15-91
	677127-677128	|	|	|	|	12-15-91
	677130-677132	|	|	|	|	12-15-91
	677134-677135	|	|	|	|	12-15-91
	677137-677138	|	|	|	|	12-15-91
	677140-677142	|	|	|	|	12-15-91
	677145-677149	|	|	|	|	12-15-91
	677160-677169	|	|	|	|	12-15-91
	677180-677199	|	|	|	|	12-15-91
	836001-836199	|	|	|	|	12-15-91
	837001-837199	|	|	|	|	12-15-91
	838001-838199	|	|	|	|	12-15-91
	840001-840199	11/90	|	|	|	12-15-91
	841001-841199	|	|	|	|	12-15-91
	842001-842199	|	|	|	|	12-15-91
	843001-843199	|	|	|	|	12-15-91
	844001-844199	|	|	|	|	12-15-91
	845001-845199	|	|	|	|	12-15-91
	846001-846199	|	|	|	|	12-15-91

Really CBT 077 (subtract 6)

Card Issuer Identifier (CIID) Assignments
(All new/revised information is highlighted and marked with a |)

August 5, 1993

Card Issuer	CIID(s)	Card Issuance Date(s)	Validation Data Base Operator	Billing Agent/Host	CMDS Host Code	Latest BRADS Activity
AT&T Communications	847001-847199	11/90	AT&T	Cincinnati Bell	308	12-15-91
	848001-848199	|	|	|	|	12-15-91
	850001-850199	1/91	|	|	|	12-15-91
	851001-851199	|	|	|	|	12-15-91
	854001-854199	8/91	|	|	|	12-15-91
	855001-855199	|	|	|	|	12-15-91
	856001-856199	|	|	|	|	12-15-91
	857001-857199	|	|	|	|	12-15-91
	858001-858199	|	|	|	|	12-15-91
	863001-863199	6/92-6/93	|	|	|	05-15-92
	864001-864199	|	|	|	|	05-15-92
	865001-865199	|	|	|	|	05-15-92
	866001-866199	|	|	|	|	05-15-92
	867001-867199	|	|	|	|	05-15-92
	868001-868199	|	|	|	|	05-15-92
	869001-869199	|	|	|	|	05-15-92
	870001-870199	|	|	|	|	05-15-92
	874001-874199	2/93-2/94	|	|	|	01-15-93
	875001-875199	|	|	|	|	01-15-93
	876001-876199	|	|	|	|	01-15-93
	877001-877199	|	|	|	|	01-15-93
	879001-879199	|	|	|	|	01-15-93
	920001-920199	|	|	|	|	01-15-93
AT&T of Puerto Rico	861001-861030	4Q91	AT&T	Cincinnati Bell	308	11-15-91
AT&T of the Virgin Islands	862001-862012	4Q91	AT&T	Cincinnati Bell	308	11-15-91

Card Issuer Identifier (CIID) Assignments
(All new/revised information is **highlighted** and marked with a |)

Card Issuer	CIID(s)	Card Issuance Date(s)	Validation Data Base Operator	Billing Agent/Host	CMDS Host Code	Latest BRADS Activity
Beehive Telephone Co. Inc.	923001	ASAP	U S WEST	(N/A)	(N/A)	03-15-93
Capital Network System	871001-871002	10/92-10/93	CNSI	CNSI	(N/A)	11-15-92
ConQuest Operator Service	990001-990199	2/92-12/92	ConQuest	ZPDI	(N/A)	02-15-92
Cooperative Long Distance	921001	1/93	Cooperative	Cooperative	(N/A)	01-15-93
Dial Services, Limited	873001-873002	10/92-10/93	TCIC	Dial Services,Limited	(N/A)	12-15-92
Cooperative Long Distance	922001	2/93-12/94	TCIC	Dial Services,Limited	(N/A)	3-15-93
First Phone - New England	834001 771001-771006	3/90-6/90 1/92-12/92	Card*Tel First Phone	Integretel First Phone	(N/A) (N/A)	04-15-90 04-15-92
Fone America	852001-852045	2/92	(N/A)	(N/A)	(N/A)	12-15-91
MCI Telecommunications	950001-950199	1Q91	MCI	MCI	(N/A)	08-15-90
Opticom	849001-849030	1/91	USW Service Link	ZPDI	(N/A)	12-15-90
Pentagon Computer Data	835001	3/90-11/90	USW Service Link	(TBD)	(N/A)	05-15-90
Roamer Services, Inc.	839001-839005	9/90-9/91	Card*Tel	Telecom*USA	(N/A)	08-15-90
Long Distance Savers	859001-859009	ASAP	TEC	LDS/TEC	(N/A)	05-15-92
Telefonica Larga Distancia de Puerto Rico	853001-853006	6/91	U.S. Intelco	P. R. Tel. Co.	490	05-15-91
Telesphere	872001-872003	10/90	Nat'l Data Corp.	Telesphere	(N/A)	09-15-90
TRT/FTC International	878011	1/91	TRT/FTC	TRT/FTC	(N/A)	12-15-90

Card Issuer	CIID(s)	Card Issuance Date(s)	Validation Data Base Operator	Billing Agent/Host	CMDS Host Code	Latest BRADS Activity
US Sprint	826001-826199	(TBD)	US Sprint	(N/A)	(N/A)	04-15-90
	827001-827199	|	|	|	|	04-15-90
	828001-828199	|	|	|	|	04-15-90
	829001-829199	|	|	|	|	04-15-90
	830001-830199	|	|	|	|	04-15-90
	831001-831199	|	|	|	|	04-15-90
	832001-832199	|	|	|	|	04-15-90
	833001-833078	|	|	|	|	04-15-90
Unitel Communications Inc.	**924001-924199**	**10/93**	**AT&T**	**AT&T**	**(N/A)**	**9-15-93** |
Vyvx Telecom	860001	1/92	USW Service Link	U. S. Intelco	(N/A)	11-15-91
Total: 24 Entities	**10,133 CIIDs**					

Subject: New Canadian CIID code for ITTS

No. 93-14

Date: October 27, 1993

To: CMDS Coordinators
METRG Members

ORIGINAL: CATS SYSTEM

NEW CANADIAN CIID CODE FOR ITTS

Unitel, a Canadian Long Distance company, was issued a CIID code that AT&T plans to include within their Intercompany Transport and Tracking System (ITTS) process. This will allow the LECs to honor the Unitel card for local calls and be reimbursed by AT&T.

When the LECs complete calls billed to the Unitel CIID cards, the billing records should be forwarded to Mail (Send To) RAO "498". This will exclude it from the BCC CATS settlements and include it within AT&T's ITTS settlements with the BCCs. The billing records should be populated as follows:

Indicator 5 = 1
Indicator 19 = 1 or 3
Indicator 23 = 4

It is expected that Unitel will have this card in the Canadian marketplace by December, 1993.

IF FURTHER INFORMATION IS REQUIRED, CONTACT DON VALICENTI ON 201-644-1545.

INFORMATION CONTAINED IN THIS NOTICE IS OF INTEREST TO INDEPENDENT EXCHANGE CARRIERS.

Ron

RON SEIGLE
MANAGER - MESSAGE PROCESSING

LOVERN - SUPPLEMENTAL BRIEF
EXHIBIT L

Ron, FYI.
Pete

Bellcore
Bell Communications Research

Date: June 28, 1995

From: Pete Nowak
46310/LCC 2B231
(201) 740-4714

Subject: New CATS/BEARS Reports Proposed by Tim Yelton

To: Exchange Carrier Relations Billing Group

During the recent ICS Task Force Meetings we have been reviewing several proposals for new reporting capabilities from BEARS including corridor traffic, collect calls and invoice processing details. This letter contains an updated version of the two "Invoice Number Processing" reports proposed by Tim Yelton of BellSouth Exchange Carrier Relations along with comments from Tim describing the need for and value of these reports. I would like to thank Tim for his efforts to enhance the usefulness of existing CATS/PARIS reports as well as develop new reporting capabilities as proposed in this letter.

Please review this material and pass along your comments to Tim or myself. Please call me on (201-740-4714) if you have any questions.

Pete

Pete Nowak
Manager
Exchange Carrier Relations

LOVERN - SUPPLEMENTAL
BRIEF
EXHIBIT M