APPENDIX II

RECEIVED

JAN 25 1994

FEDERAL COMMUNICATIONS COMMISSION
OFFICE OF THE SECRETARY

LAW OFFICES

ROSS & HARDIES

A PARTNERSHIP INCLUDING PROFESSIONAL CORPORATIONS

888 SIXTEENTH STREET, N.W.

WASHINGTON, D.C. 20006-4103

202-296-8600

TELECOPIER
202-296-8791

150 NORTH MICHIGAN AVENUE
CHICAGO, ILLINOIS 60601-7567
312-558-1000

PARK AVENUE TOWER
65 EAST 55TH STREET
NEW YORK, NEW YORK 10022-3219
212-421-5555

580 HOWARD AVENUE
SOMERSET, NEW JERSEY 08875-6739
908-563-2700

STEPHEN R. ROSS

January 25, 1994

HAND-DELIVERED

William F. Caton
Acting Secretary
Federal Communications Commission
Room 222
1919 M Street, N.W.
Washington, D.C. 20554

Re: Implementation of Section 17 of the Cable Television Consumer Protection and Competition Act of 1992 Compatibility Between Cable Systems and Consumer Electronics Equipment
ET Docket No. 93-7 -- FCC No. 93-495

Dear Mr. Caton:

Enclosed on behalf of InterMedia Partners, ML Media Partners and ML Media Opportunity Partners, are the original and four copies of Summary Comments to be filed in the above-referenced proceeding.

Please address any questions concerning these Comments to the undersigned.

Cordially,

Stephen Ross/KH

Stephen R. Ross

SRR/sdb
Enclosures

DOCKET FILE COPY ORIGINAL

BEFORE THE
FEDERAL COMMUNICATIONS COMMISSION
Washington, D.C.

RECEIVED
JAN 25 1994
FEDERAL COMMUNICATIONS COMMISSION
OFFICE OF THE SECRETARY

In the Matter of:	)	
	)	
Implementation of Section 17 of the Cable Television Consumer Protection and Competition Act of 1992	)	ET Docket No. 93-7
	)	FCC No. 93-495
	)	
Compatibility Between Cable Systems and Consumer Electronics Equipment	)	

SUMMARY COMMENTS

InterMedia Partners, ML Media Partners and ML Media Opportunity Partners (Joint Filers) respectfully comment in response to the above referenced Notice of Proposed Rule Making. Joint Filers generally support the approach proposed by the Commission in the NPRM and also support the consumer electronics/cable inter-industry filing with respect to the technical requirements for cable-ready receivers.

To help create a complete record in this proceeding, Joint Filers, as part of these comments, submit the extensive study done by CableLabs into the matters raised by the NPRM. We believe that this comprehensive work shows that the performance goals jointly agreed upon by the consumer electronics and cable industries are necessary, realistic and attainable.

Most consumers (and the retailers who serve them) regard extended tuning range and "cable-ready" as being synonymous. Since the only use of the extended tuning range is for direct connection to cable systems, continued production of non-conforming, but extended tuning range, equipment should be forbidden to avoid frustrating Congress' intentions. Alternatively, we suggest that the promotion of that tuning capability be banned as being tantamount to "implying that the equipment is meant for connection to cable service" which is the Commission's suggested criterion for triggering mandatory "cable-ready" performance criteria. A less desirable third alternative would be to require that non-conforming extended-tuning-range equipment be labelled to warn potential purchasers that it might not work properly when directly connected to a cable system. Regardless of other regulations related to non-conforming, extended tuning range receivers, Joint Filers strongly recommend that the Commission enforce those cable-ready provisions which prevent interference to other subscribers.

Finally, Joint Filers support the Commission's stated intention to standardize digital transmission on cable systems. We suggest steps that can be taken to encourage the early introduction of this new technology, preserve cable operator's rights to control access to its programming, and allow most digital circuitry to migrate into advanced television receivers.

TABLE OF CONTENTS

INTRODUCTION 1

CUSTOMER PREMISES EQUIPMENT: THE CABLELABS REPORT 2
- Direct Pickup Interference 2
- Tuner Performance 4

THE JOINT AGREEMENT 6

NON-CONFORMING EQUIPMENT 7

CONVERTERS 10

DETAILED RESPONSE TO NPRM ISSUES 11
- Paragraph 12: Proposals for Existing Equipment 11
- Paragraph 13: Scrambling of Basic Tier Services 11
- Paragraph 16: Consumer Education on Third Party Remote Control Units 12
- Paragraph 19: Channelization Plan 13
- Paragraph 20: Decoder Interface Connector 13
- Paragraph 23: Various Tuner Requirements 13
- Paragraph 29: Acceptable Signal Formats 15
- Paragraph 30: Charges for Set-Back Decoders 15
- Paragraph 31: Channelization 16
- Paragraph 34: Digital Standards 17

CONCLUSION 18

BEFORE THE
FEDERAL COMMUNICATIONS COMMISSION
Washington, D.C.

RECEIVED

JAN 2 5 1994

FEDERAL COMMUNICATIONS COMMISSION
OFFICE OF THE SECRETARY

In the Matter of:	)	
	)	
Implementation of Section 17 of the Cable Television Consumer Protection and Competition Act of 1992	)	ET Docket No. 93-7
	)	FCC No. 93-495
Compatibility Between Cable Systems and Consumer Electronics Equipment	)	

COMMENTS OF JOINT FILERS

InterMedia Partners, L.P., ML Media Partners, L.P. and ML Media Opportunity Partners, L.P., together operators of cable systems serving over 900,000 subscribers in 13 states (hereafter "Joint Filers"), hereby respectfully submit their comments in response to the above referenced Notice of Proposed Rule Making in ET Docket No. 93-7, FCC No.93-495, released December 1, 1993, (hereafter "NPRM").

INTRODUCTION

In the NPRM, the Commission proposes a multifaceted approach to dealing with the existing base of installed equipment, new equipment, and the eventual introduction of digitally encoded television programming. Joint Filers support the general regulatory approach proposed by the Commission. Two of InterMedia Partner's employees are active participants on the Cable/Consumer Electronics Advisor Group (hereafter "CAG") and the EIA/NCTA Joint Engineering Committee (hereafter "JEC") and have been involved in developing the joint industry positions on the various compatibility issues. Thus, Joint Filers support the joint filing of those inter-industry groups in this rulemaking with respect to the characteristics that a receiver should

have in order to be identified or marketed as "cable-ready." Those agreements represent a realistic balance between assuring reception free from objectionable interference and limiting the incremental cost necessary to produce a truly "cable-ready" receiver.

Finally, Joint Filers will discuss several issues raised by the NPRM which are beyond the scope of the inter-industry agreement.

CUSTOMER PREMISES EQUIPMENT: THE CABLELABS REPORT

Included with this filing is an extensive study sponsored by CableLabs in an attempt to quantify many of the issues raised in the NPRM with regard to performance of receivers. It is entitled *Customer Premises Equipment Performance and Compatibility Testing*. The work was done by experts in several fields. The contents are summarized below.

Direct Pickup Interference

The most serious receiver performance deficiency is inadequate shielding, which allows its internal circuitry to pick up off-air signals which then interfere with signals received from the cable system. In order to set a reasonable standard for the shielding required, it is necessary to know the strengths of the fields in which receivers are immersed, to have a repeatable methodology for measuring susceptibility, to understand performance of current receivers, and finally, to determine the level of interference that customers find acceptable. The report addresses all of these issues.

- Characterization of the RF Environment, a study by Stern Telecommunications Corporation, uses both field measurements and a study of predicted field strengths and

receiver locations to predict the exposure of receivers to various levels of external field strengths from both VHF and UHF television broadcasting stations. In summary, the study predicts that 40.8% of television households will experience a field strength of at least 100 mV/meter (100 dBμ), while 6% will experience field strengths of at least 1 V/meter. The study did not include non-television RF sources (such as paging equipment and two-way communication radios) which are also a frequent cause of ingress interference.

A separate study by Carl T. Jones examines possible factors that may affect the field strength actually experienced by a receiver relative to the amplitude predicted by Stern. In summary, Jones found that the strength could vary by ±13 dB as a function of the height of the receiver (with the lower levels in first floor locations and the higher levels in high-rise apartments), by 0 to -12.5 dB in first-floor suburban homes due to building attenuation (but with decreasing shielding as a function of receiver height in multi-story buildings), and by 0 to -4 dB due to urban clutter in dense areas.

- Development of Test Procedures. Carl T. Jones proposes test procedures which will allow the quantitative measurement of shielding effectiveness of receivers. These procedures have been reviewed by JEC engineers and are believed to be close to acceptance by both cable and CE industries.

- Characterization of Current Production Receivers. Using the proposed procedures, Carl T. Jones tested a representative sample of television receivers, VCRs and cable converters furnished by the manufacturers for that purpose (as well as a number purchased from local dealerships). It should be noted that nearly all of the cable converters tested

met the shielding standard proposed by CAG, indicating that the proposed standard is within the realm of commercial practicality.

- Consumer Tolerance of Interfering Carriers. The Commission has, in general, proposed a standard of "just perceptible" interference in discussing receiver signal degradation. For signals which are not frequency coherent (such as UHF broadcast stations), the National Association of Broadcasters and CBS have previously found that level to be 58 to 63.5 dB below the desired signal when the interfering carriers were near the luminance or chroma carriers, and somewhat less at intermediate frequencies. In this new study, Bronwen Jones, repeats the earlier CBS/NAB measurements of subjective degradation, but also measures the subjective masking effect of noise at both the -50 dB level (corresponding to an average cable subscriber in a modern system) and at a level of -43 dB (corresponding to the worst acceptable level under the FCC's technical rules as of June, 1995[1].) Her measurements confirm 55 dB carrier-to-interference ratio as a good approximation to "just perceptible" interference.

Tuner Performance

Aside from shielding against ingress, many characteristics of receiving equipment can potentially degrade both the user's reception and that of other subscribers and non-subscribers. Specifically:

- Inadequate shielding can also allow cable input signals to radiate from a receiver's internal wiring in excess of the limits allowed under §76.605(a)(12).

---

[1]47 C.F.R. §76.605(a)(7).

- Leakage out the antenna port of signals generated within the receiver (or picked up by the receiver's wiring due to inadequate shielding) can interfere with reception of other cable subscribers.
- Limited isolation of antenna selector switches can lead to
  - Radiation of the cable signals from the customer's antenna
  - Antenna-received signals interfering with customer's reception
  - Antenna-received signals interfering with reception at neighboring cable customers.
- Image response can cause interference to customer's reception.
- Tuner overload can cause second and third order beat products to be generated which will interfere with the customer's reception.
- Excessive loss in such devices as VCRs can cause noisy reception in downstream receivers.
- Inadequate rejection of adjacent channels can cause in-channel beat products which will interfere with the customer's reception.

These issues are all raised in the NPRM. In the section of the report entitled *Receiver Performance*, Carl T. Jones has suggested test procedures for all of these parameters. At this time, these procedures are under consideration by the appropriate JEC subcommittee.

Bronwen Jones' work characterizing subscriber's perception of picture quality is equally applicable to these other interference mechanisms.

As a test of the validity of the procedures, as well as to characterize the state of current production receivers, Carl T. Jones has also included test results on several television receivers, VCRs and converters. As with shielding effectiveness, it should be noted that nearly all the

converters tested met nearly all of the performance criteria proposed by CAG/JEC, indicating that the tuner requirements are not unduly burdensome.

THE JOINT AGREEMENT

The negotiations that have taken place in the past several months in the CAG (and for many years in the JEC) in attempting to reach a common understanding on what "cable-ready" means have carefully balanced the potential incremental cost of such receivers against the benefit gained. It was recognized by both parties that specifying performance standards that would offer essentially perfect reception on every channel in every cable system all the time would result in gross over-specification and unacceptable cost. The negotiators, instead, tried to reach agreements that would result in acceptable reception for the vast majority of cable customers at an acceptable incremental cost. As part of that agreement, and in recognition of unavoidable production variables, the JEC has suggested a standard which states that 95% of production receivers must meet each specification. Joint Filers agree and feel that this is the optimum cost/benefit ratio for the consumer, providing manufacturers are obligated to correct field problems that result from non-conforming equipment.

With respect to the decoder interface connector, it was not possible to reach agreement on all the details of the improved interface. Joint Filers agree with the CAG that the suggested improvements to the already-released ANSI/EIA 563 interface standard are worth the wait. In particular, the ability to accommodate all current analog scrambling methods plus allow a transition to digital without immediately re-creating a requirement for set-top boxes is a worthwhile improvement to the existing standard.

NON-CONFORMING EQUIPMENT

The proposed rules do not address the problem of possible continued production of extended tuning range receivers which do not meet the requirements for "cable-ready" equipment. It must be pointed out that ***the only reason for providing the ability to tune the cable-exclusive channels is to allow direct connection to a cable system***. Other delivery systems (DBS, MMDS and, potentially, video dial tone) all interface to the receiver at either a standard VHF television channel or directly at video. Joint Filers feel that it defeats the entire purpose of defining required receiver performance for cable operation if manufacturers are allowed to continue to produce non-conforming receivers with extended-range tuners.

Potential television and VCR purchasers typically "test" the equipment in a showroom where the equipment is connected to a single channel or broadcast signal source, and therefore have no way of judging the equipment's capability in a full cable environment. In fact, it is likely that true cable-ready sets and cheaper "regular" sets will perform similarly in the showroom, given the limited signal source. Therefore, it is also likely that many consumers will select "regular" receivers when they make their buying decision because of price. The best way to guide consumers toward the correct equipment for their situation (cable *vs* off-air) would be to limit non-cable-ready sets to standard VHF/UHF tuners.

While it might be argued that the presence of decoder interface connectors (if purchasers are aware of them and their significance) may be a factor guiding consumers to cable-ready receivers, it should be pointed out that, to the extent that the Commission is successful in encouraging operators to use delivery techniques such as traps, that will not be a factor.

However, should the Commission feel that the outright prohibition of extended-tuning-range, but not cable-ready, receivers is beyond the scope of its authority under the Cable Act of 1992[2], then Joint Filers suggest that measures must be taken to assure that potential purchasers of receivers receive clear information on which to base their buying decision. As the Commission has noted,

> ***. . . there appears to be confusion on the part of consumers about whether, and the extent to which, equipment is "cable ready" or "cable compatible."*** [3]

In particular, Joint Filers are concerned that, in the minds of most potential purchasers and local retailers, the term "cable-ready" is synonymous with the ability to directly tune the cable-exclusive channels. We note that in its *Report to the Congress*[4], the Commission proposed to apply the new standards to

> ***. . . all consumer electronics equipment that is marketed as "cable-ready" or with other marketing terms intended to imply that the equipment is meant for connection to cable service.***

We applaud this recognition that it is not the precise term "cable-ready" that is important, but the broader implication of being suitable for direct connection to a cable system. Given the confusion between tuning range and true compatibility, Joint Filers suggest that advertising, specification or promotion of tuning range beyond the broadcast channels cannot be interpreted

---

[2]*Cable Television Consumer Protection and Competition Act of 1992*, Pub. L. No. 102-385, 106 Stat. 1460 (1992).

[3]NPRM, page 2, paragraph 3.

[4]*Consumer Electronics and Cable System Compatibility: Report to the Congress*, Federal Communications Commission, October 1993, page 65.

in any other way than "implying that the equipment is meant for connection to cable service" and must be forbidden. Moreover, as a ***minimum*** means of allowing potential purchasers of receiving equipment to make informed choices, we request that the Commission require that TVs and VCRs which are capable of tuning cable-exclusive channels but which do not meet the performance criteria for a cable environment be prominently labeled, preferably with a sticker on the front of the display tube or on the face of the VCR, warning buyers that the equipment may not function properly when connected to a cable system. We suggest the following language:

> Notice: This device does not meet the requirements established by the Federal Communications Commission for equipment designed to work properly when attached to a cable television system.

Finally, Joint Filers wish to point out that, while some of the specifications for cable-ready equipment affect the quality of reception afforded the purchaser, others prevent the receiver from affecting the cable network and, in particular, the reception of other subscribers. While it has been argued that consumers should have the option to purchase equipment which may offer inadequate reception, in order to assure low prices, the Commission must take steps to insure that such equipment does not harm the operation of the network to which it is attached[5]. Therefore, Joint Filers strongly recommend that the specifications regarding all emissions conducted back into the cable system (Local Oscillator Leakage, DPU signals, and Antenna Selector Switch Isolation) plus the specification on re-radiation of cable signals be met by <u>all</u> extended tuning

[5]This is consistent with its approach to telephone equipment which may offer inferior performance and reliability, but is still required to meet the standards of 47 C.F.R §68 at its interface with the telephone system.

range receivers, just as the current Part 15 rules on spurious emissions[6] must be met by all broadcast receivers, regardless of their other features.

CONVERTERS

The NPRM proposes applying the tuner performance criteria to converters, as well as television receiver and VCRs[7]. Joint Filers support that inclusion. Given that a converter connected ahead of a broadcast television receiver is, in effect, a "cable-ready" receiver (as the term is generally understood), it is logical to require that its tuner perform as well as any other "cable-ready" device. Thus shielding, tuning range, channelization and all other performance criteria should apply to converters since ***deficiencies in those parameters have the same potential for degrading reception at both the subscribers premise and neighboring receivers***.

Since all cable converters are marketed with the clear intent of being suitable for connection to cable service, the "cable-ready" performance requirements should apply to all such devices.

Therefore, throughout this document, the term "receiver" is intended to apply to converters, as well as TVs and VCRs.

---

[6] 47 C.F.R §15.63

[7] ***"We are also proposing to apply these performance and testing requirements to cable system terminal devices***"; NPRM, page 12, paragraph 23. Cable system terminal devices are further defined as ***"TV interface devices that serve, as their primary function, to connect a cable system to a TV receiver or other subscriber premise equipment."*** This definition includes cable converters.

DETAILED RESPONSE TO NPRM ISSUES

The following remarks are keyed to specific issues raised in the NPRM. Where comments on specific performance criteria were requested, Joint Filers agree with the joint filing of the CAG and JEC unless otherwise stated.

Paragraph 12: Proposals for Existing Equipment

Joint Filers, in general, agree with the proposed approach to dealing with the installed base of receivers. We believe, as suggested in the NPRM, that such accessory equipment, if furnished by cable operators, should be charged on the same basis as other terminal equipment. We suggest, however, that the language relating to delivery of unscrambled programming ". . . ***without passing through the set-top device***. . ." be clarified as many set-top converters have internal bypass switches which satisfy the intent of the proposed requirement, but which, technically, require the signal to pass "through" the box. We suggest that the above quoted phrase be dropped as it may be confusing.

Paragraph 13: Scrambling of Basic Tier Services

The motive to steal cable services is, logically, proportional to the desirability of the stolen programming. Joint Filers do not oppose a requirement to carry local broadcast signals in unscrambled form. Extending that requirement, however, to optional programming that may be carried as part of the Basic service will tend to make operators carry little of perceived value in the lowest tier in order to preserve their options to protect their product. We believe that this will work to the disservice of the customer and operator alike.

With respect to public, educational and governmental programming (PEG), we agree with the requirement that such programming ***which is intended for reception by a general audience***, be carried in the clear. We wish to point out, however, that PEG channels are often used to carry programming that is not intended for general reception. Examples are use of the government channels for training films for fire fighters, or use of the educational channel for teacher training, or to carry specialized classes intended for a limited audience. In order to preserve such public-benefit uses of PEG channels, we request that the Commission clarify that only PEG programming intended for the general public need be carried in the clear.[8]

Paragraph 16: Consumer Education on Third Party Remote Control Units

Joint Filers do not object to informing customers of the availability of remote control units from retail sources, but question their ability to ascertain all such controls available and all stores which may carry such units. Such devices have become commodity items, often selling for under $10 and, like most low-cost consumer items, new models and sources appear so quickly that it would be almost impossible to track. In the San Francisco Bay Area, for instance, remote controls are available from department stores, television and electronics dealers, hardware stores and other outlets. The San Jose telephone book, one of several regional phone books, lists seven pages of television dealerships alone.

In light of these realities, Joint Filers suggest that the most effective way Congress' intent in this area can be achieved is by requiring cable companies to provide a list of several remote

---

[8]InterMedia carries some scrambled governmental programming on its cable system in Santa Clara, California.

controls which will work with the system's converters as well as the names of several retailers that carry such remotes. Any requirement that these lists include all such remotes and/or retailers will be unworkable in many instances.

Paragraph 19: Channelization Plan

Joint Filers agree that mutual adherence to the EIA 542 (formerly IS-6) channelization plan, as modified, is a fundamental part of achieving compatibility. We suggest, however, that it be made clear that the required channelization ***only apply to signals intended for reception by cable-ready receivers***. The reason for this clarification is that cable systems now and in the future may carry many signals (including analog video teleconferencing, for instance) not intended for reception by television receivers.

Paragraph 20: Decoder Interface Connector

As stated above, Joint Filers support the efforts of JEC to improve upon the current ANSI/EIA 563 standard. While we feel that the current standard is workable, we believe that the revisions contemplated (particularly the addition of an unshaped intermediate frequency output port) will result in a wider deployment and provide an upgrade path to digital.

Paragraph 23: Various Tuner Requirements

With respect to radiated emissions, the JEC has proposed, and Joint Filers support, the suggestion that the relevant specification for re-radiation of cable signals from the internal wiring of receivers be the limits of §76.605(a)(12), rather than existing Part 15 limits. Since cable

systems are held to Part 76 signal leakage limits, so must individual components of the total system (including directly connected receivers). The tests done by Carl T. Jones as part of the CableLabs publication submitted with these comments indicate that ingress is a linear phenomenon, so that testing is only required at the maximum probable input signal level. Joint Filers agree with the JEC that in most cases this will be +15 dBmV. Given that ingress and egress are related phenomena, we believe that, so long as ingress is tested over the entire frequency range, it is sufficient to test egress on a few channels (including the lowest and highest) distributed across the frequency range.

With respect to image rejection, the Commission has suggested that solving the DPU problem will also solve image problems. Joint Filers (and the JEC) respectfully disagree. While rejection of off-air image signals is a function of shielding, rejection of cable image signals is a function of the design of the input mixers, amplifiers and filters of the receiver and should be separately specified, as the JEC has done.

With respect to antenna selector switch isolation, Joint Filers feel that the JEC-proposed specification of 55 dB isolation between 550 MHz and 1002 MHz is marginal, as it provides "just perceptible" interference protection only if the input signal are exactly matched, an unlikely event. We believe, however, that the JEC proposal is based on the incremental cost of providing higher isolation, and that average isolation in production receivers will have to exceed the standard by a substantial amount in order to assure a 95% compliance level. For that reason, Joint Filers support the JEC proposal.

Paragraph 29: Acceptable Signal Formats

Joint Filers agree with the general approach of requiring cable operators to use either in-the-clear technology or offer consumers set-back decoders. As operators of many small cable systems, however, we are concerned with the burden of replacing in-place scrambling systems for which we may not be able to acquire set-back decoders. In several cases these units are fully functional, but are no longer in production. Replacing the entire scrambling system would be prohibitively expensive, while abandoning it in favor of traps would be expensive and remove customer's access to easy changes in programming level and all pay-per-view programming options. In either case, we suggest that the benefits gained in consumer interface convenience would be more than outweighed by the cost of compliance. Joint Filers suggest a ten year phase-in period. This would allow existing, non-complying scrambling hardware to be fully depreciated before requiring its replacement, and is consistent with the commission's proposal on channelization in Paragraph 31.

Paragraph 30: Charges for Set-Back Decoders

Joint Filers agree with the Commission's stated intent in encouraging subscribers to purchase receivers which utilize set-back decoders as a means of assuring long-term compatibility. However, we respectfully submit that the transparency of the set-back device is sufficient incentive for its purchase and that requiring the cable industry to subsidize the use of this equipment through the provision of free set-back decoders is unnecessary and bad public policy. Moreover, the current formulas used to compute benchmark rates for regulated tiers of service do not include the value of the general cable network in the calculation, and it is unclear

how the incremental investment will be recovered by the operator, unless all operators elect cost-of-service regulation[9]. Provision of the decoders at "actual cost" should provide adequate consumer protection.

Finally, the provision of "free" decoders will become a severe economic burden when digital decoders become necessary. Unlike analog decoders, where set-back units are expected to cost less than set-top units (because of the elimination of duplicate circuitry), digital set back devices will be expensive and cost approximately the same as their set-top equivalents. The reason is that the tuner circuitry is a small part of the cost of a digital decoder and, in the embryonic state of digitally compressed programming, the cost of the basic demodulation/demultiplexing/descrambling/de-compressing hardware is very high, approximately $300. In order to avoid stifling this new signal delivery means, we suggest that they be leased at a rate that is consistent with the formula for existing analog set-top converter/decoders.

Paragraph 31: Channelization

The newly-revised extension of IS-6 (now identified as EIA 542) does not define the multiplexing of digitally compressed channels within a 6 MHz channel. We believe that it is premature to specify that parameter. The Commission has stated an intention to standardize digital transmission formats and we respectfully suggest that the appropriate time to further define channelization beyond the basic 6 MHz blocks of spectrum defined in EIA 542 should be after transmission standards are set. So long as the Commission is willing to allow sub-channelization

[9]Since the cost of service rules have not been issued, it is not clear at present how such costs would be recovered under this option either.

on an unregulated basis, in the interim, we do not see an impediment to introduction of digitally compressed signals.

Paragraph 34: Digital Standards

Converting an analog video signal to compressed, digital form requires several steps:

1. Digitizing the analog signal for processing
2. Compressing the digital signal to as low a bit rate as possible while retaining essential picture information.
3. Scrambling the resultant bit stream to provide security against theft.
4. Multiplexing the scrambled bit stream of one program with other digital program bit streams into a single data stream.
5. Adding error correction to the multiplexed data stream.
6. Modulating the bit stream onto an RF carrier for transmission.

Of these steps, all except scrambling could logically be standardized and eventually be included in consumers' receivers. Hopefully, the eventual standard will have many common elements with the emerging Advanced Television standard, so that common processing elements will be usable for both compressed NTSC and ATV. We believe that the schedule proposed by CAG is appropriate and will coincide with the development of this technology, as well as international standardization efforts already underway.

Joint Filers strongly suggest that the Commission not attempt to standardize scrambling (step 3 above). If scrambling were standardized and security were controlled by "keys" contained in "smart cards", for instance, it would be virtually impossible to change out descramblers if the

system were compromised[10]. Even lacking a "break" in the basic scrambling system, operators would be faced with the continuing expense of new "smart cards".

The descrambling hardware itself represents only a small percentage of the cost of the digital receiving process, so little will be saved by moving it inside each receiver. Aside from the stupendous risk associated with selling consumer equipment with descrambling circuitry built in, smart cards themselves have proven to be of limited security. In Europe, where smart card technology is utilized for satellite decoders, breaches of security are common and suppliers have to distribute new cards on a frequent and regular basis.

CONCLUSION

Joint Filers support the balanced approach the Commission has proposed to assure the best interface between cable systems and consumer electronics equipment. We also support the efforts of the JEC and CAG in reaching agreement on the technical aspects of the consumer equipment interface. We commend the CableLabs study to the Commission as the most complete and scholarly study to date on performance of existing receivers, the general signal environment within which they operate, customer expectation of signal quality, and test procedures for quantifying performance measurements.

We are particularly concerned that the intent of Congress and the FCC in assuring future compatibility will be thwarted if manufacturers are allowed to continue to manufacture non-

---

[10]When the first Videocipher was introduced, the scrambling process was described as "unbreakable." Not only was the scrambling scheme "broken" in a matter of months, but chips were quickly developed which fully authorized a Videocipher when installed in place of the original component.

conforming equipment which is, by virtue of its tuning capability, manifestly intended for direct connection to cable systems. Our strong recommendation is the outright ban on selling of such equipment in the future. If its production is not prohibited, then we request that the FCC forbid any promotion of its extended tuning capability as that is a means of "implying that the equipment is meant for connection to cable service," which the Commission has proposed as a standard for triggering the new performance criteria. We also suggest clear product warnings on non-conforming equipment which will allow potential purchasers to make informed choices. In any case, we strongly recommend that any extended tuning range receiver conform with those specifications which prevent interference to other receivers or excessive re-radiation of cable signals when connected to the network.

With respect to the coming introduction of digitally compressed programming, we recommend that the Commission encourage this still-emerging technology while studying future consumer-interface issues. Specifically, we recommend that

A. Cable operators be allowed to charge for digital descramblers on an "actual cost" basis, whether set-top or set-back.

B. The Commission proceed with the standardization of compression and modulation formats for digital signals in cooperation with the CAG and JEC, but that digital scrambling be left unregulated to protect cable operators' ability to fully control access to their product.

Respectfully Submitted,

InterMedia Partners, L.P.

By: David G. Rozzelle /sm
David G. Rozzelle, CEO Cable Operations

By: David J. Large
David J. Large, Director of Engineering

ML Media Partners, L.P.
ML Media Opportunity Partners, L.P.

By: David Van Valkenberg /sm
David Van Valkenberg, CEO

January 20, 1994

Compatibility Between Cable Systems
and Consumer Electronics Equipment
ET Docket No. 93-7 -- FCC No. 93-495

Attachment to Comments of Joint
Filers, InterMedia Partners,
ML Media Partners and
ML Media Opportunity Partners

CableLabs
Cable Television Laboratories, Inc.

Customer Premises Equipment

Performance and Compatibility

CableLabs

Customer Premises Equipment Performance and Compatibility Testing

Including:

Characterization of the RF Environment

Testing Methodology, Procedures, and Results

Perceptibility Measurements

Supporting Appendices

Cable Television Laboratories, Inc.
1050 Walnut Street, Suite 500
Boulder, Colorado 80302
Phone: 303/939-8500
Fax: 303/939-9189

Table of Contents

Frontispiece		i
Table of Contents		ii
1.0	**General Summary**	
1.1	**Background**	**1**
1.2	**Statistical Model**	**2**
1.3	**Direct Pickup Interference**	**3**
1.4	**Receiver Performance**	**7**
	1.4.1 Re-Radiation of Cable Signals	**8**
	1.4.2 Local Oscillator Leakage and Backfeed	**8**
	1.4.3 A/B Switch Isolation	**9**
	1.4.4 DPU Backfeed	**9**
	1.4.5 VCR Through-Loss	**10**
	1.4.6 Adjacent Channel Rejection	**10**
	1.4.7 Image Rejection	**11**
	1.4.8 Tuner Overload Performance	**12**
1.5	**Viewer Perceptability**	**12**
1.6	**Conclusions and Recommendations**	**13**
2.0	**Characterization of the RF Environment**	**Tab 2**
3.0	**Direct Pickup Interference**	**Tab 3**
4.0	**Receiver Performance**	**Tab 4**
5.0	**Perceptibility Measurements**	**Tab 5**
6.0	**Appendices**	**Tab 6**
	Mitigating Factors	
	Detailed Test Procedure Booklets	

1.0 General Summary

Customer Premises Equipment Performance and Compatibility Testing

Cable Television Laboratories, Inc.
Boulder, Colorado

1.0 General Summary

1.1 Background

To facilitate the viewing of any television programming over a cable system, a long, multi-industrial chain of processes must take place in a fortuitous manner. A television segment begins with the creative talent and proceeds through the production, distribution, financial, and legal engines, subsequently to be delivered to the over 10,000 cable television headends in the United States. These various operational elements perform their efforts in relative harmony with well-defined and cooperative interfaces, considering the complexity of the system. But once the signals pass through the cable headend and are transported to the customer home over the cable system, there is yet one additional interface which must be bridged, that being between the cable delivery system and the consumer electronics display devices which are the last parts of the electronic system before the visual and aural signals are available to the human receptor, the object of the whole system. This interface has been problematic since the very early days of cable, about 50 years ago, is still so today, and provides the rationale for the research and measurements documented herein.

There has been considerable effort over the last decade to find a solution to the disharmony at the consumer interface through joint negotiations between the consumer electronics and cable industries. While some progress has been made, there are still many issues yet to be resolved. In fact, Section 17 of the Cable Television Consumer Protection and Competition Act of 1992 ("Cable Act of '92") specifically addresses many of these unresolved problems.

The efforts described in this document are a direct result of these long-standing interface problems and the guidance given in the Cable Act of '92 as to their solution. The EIA/NCTA Joint Engineering Committee ("JEC") has within its purview, responsibility for specifying the performance characteristics of a tuner which would be able to receive cable signals without the degrading side-effects exhibited by the broadcast-oriented tuners found in all consumer products today. In this committee, the absence of two primary data items has blocked real agreement between the main parties, that being the sizing of the problem as to the consumer population impacted by direct pickup interference (DPU), for instance, and the development of a necessary and sufficient specification for the performance of the tuners themselves. Related to both items is the development of acceptable baseline test procedures for each of the factors considered.

Recognizing the difficulty of developing the above extensive materials by such volunteer committees as the JEC, Cable Television Laboratories, Inc. ("CableLabs"), as directed by its member companies and in cooperation with the NCTA and the EIA, moved to fund the necessary projects to develop the data required to free the JEC to act.

In January, 1992, CableLabs asked Stern Telecommunications Corporation ("STC") of New York City, NY to undertake a study to answer the first question, that relating to the extent and degree to which television receivers in the United States are subjected to various

levels of co-channel interference in the cable delivered picture through the mechanism of direct pickup interference. This phenomena is described in more detail in the sections below. The results of the STC study are briefly discussed in section 1.2 of this summary, and covered in more detail by STC in section 2.0 below. STC was selected because of its interest in and understanding of the problem, and its long-standing and even-handed relations with the broadcast, cable, and consumer industries.

In December, 1992, CableLabs issued two open solicitations addressing two of the other issues. The first solicitation called for the development of baseline test procedures for determining the susceptibility of customer premises equipment, including television receivers, videocassette recorders, and cable converter units, to the effects of direct pickup interference, and the testing of a sample of such CPE to determine the generalized state-of-art. The second solicitation covered the same tasks, but as related to the deteriorating effects of other receiver performance characteristics, such as the re-radiation of cable signals, local oscillator leakage and backfeed, A/B switch isolation, DPU backfeed, VCR through-loss, adjacent channel rejection, image rejection, and tuner overload performance. After evaluation, both contracts were awarded to the Carl T. Jones Corporation ("CTJ") of Springfield, VA. Further discussion re the irradiated and conducted DPU, and the other listed performance factors can be found in sections 1.3 and 1.4 of this Executive Summary, and in sections 3.0, 4.0, and 6.0 in the body of the report.

Finally, in August, 1993, CableLabs asked Dr. Bronwyn L. Jones, a much respected researcher relative to the psychophysical effects on the viewer of perceptible degradation in the television picture, to relate the objective measurements of DPU susceptibility made at CTJ to the actual impact as to perceptibility in the television viewer.

1.2 Statistical Model

While there was a great deal of anecdotal data regarding the cost of cable's response to DPU complaints by subscribers, mainly based on service calls where DPU was the cause, and/or the number of non-descrambling converters deployed specifically to address this problem, there was no definitive data set which allowed the consumer manufacturers to analytically assess the magnitude of the impact of this problem. Frequently requested by the consumer caucus of the JEC was a chart which would apportion television households in the United States as a function of the field strength of the UHF and VHF off-air signals in which they resided. This data is required, so that when combined with that developed in the other efforts contained herein, the DPU problem could be properly sized and an appropriate response planned. This is the thrust of the modeling and verification accomplished by Stern Telecommunications Corp. ("STC") under contract to CableLabs.

The procedure used by STC was to combine literature searches, computer modeling, laboratory measurements, and some specific field verifications which resulted in the summary histogram shown in figure 1.2.1 below, and the data found in Section 3.0. The EIA contracted Mr. Jules Cohen of Washington DC to examine the analyses and comment. After study by STC it was determined that Mr. Cohen's comments were relevant and they have been addressed in the data contained in this report.

The geographic areas evaluated in this study consisted of the top ten television ADIs, which represents approximately 30% of total US households. The varied demographics and physical attributes of these ten ADIs permitted the data to be extrapolated to represent all urban and suburban television homes in the US.

Iso-contours representing varying VHF and UHF field strengths were calculated by the model and the numbers of television homes within each level were developed. Other factors, such as the shielding effectiveness of the CPE, the location within the dwelling, the orientation of the unit to the interfering transmitter, the effects of building shielding, and urban-suburban clutter are part of the CTJ study and not contained in this effort.

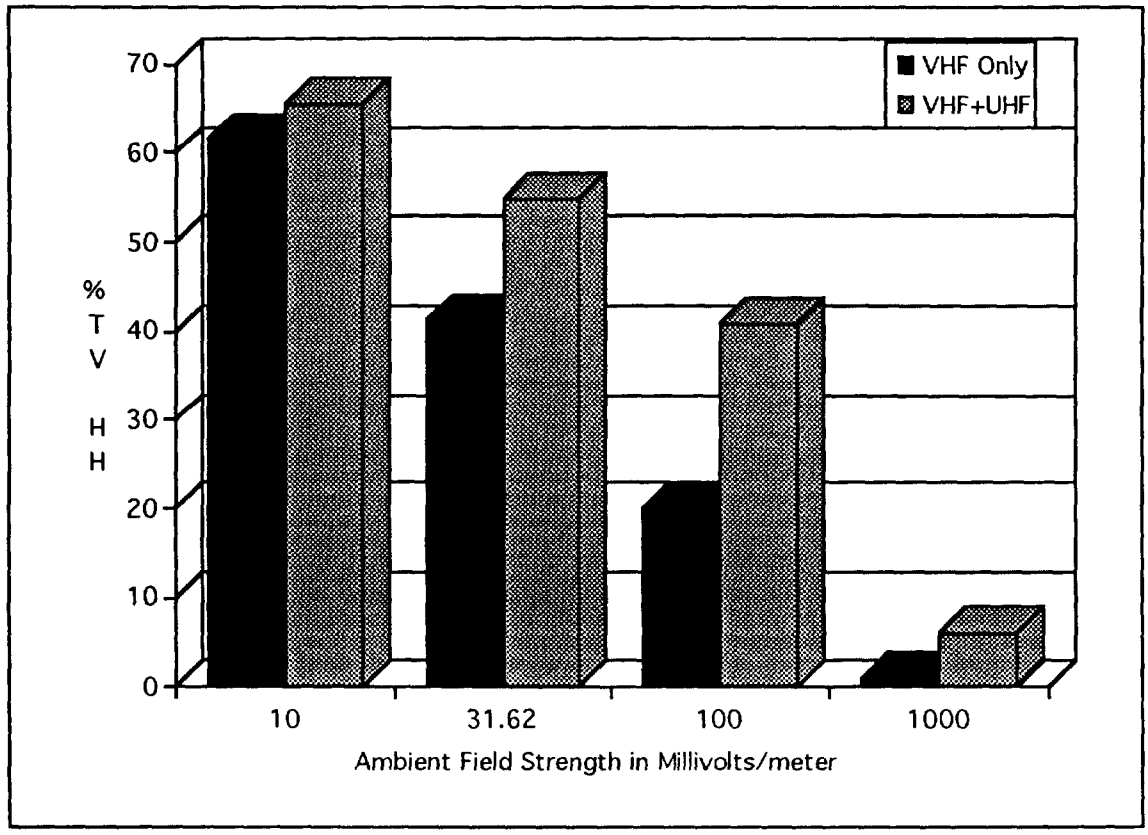

Figure 1.2.1 Allocation of TV households in the STC study as a function of the ambient field strength in which they reside (all US TV HH).

To sum up this chart, it represents that some 65.4% of all US TV households reside in fields of 10 mv/m or greater, that 54.8% of all US TV households reside in fields of 31.62 mv/m (90 dBu) or greater, that 40.8% of all US TV households reside in fields of 100 mv/m or greater, and that 6% of all US TV households reside in fields of 1 volt/meter or greater. Note the discussion in the summary section below as to the representation of these percentages in actual numbers of CPE in cable households in the US.

1.3 Direct Pickup Interference

Direct pickup interference, or DPU, exists when external co-channel signals ingress into the tuner in CPE and interfere with and degrade the signal delivered by cable. This ingress may be in the form of an electromagnetic field irradiating the CPE, or in the form of signal currents entering the unit on the power cord or the braid of the coaxial cable connected to the CPE. It was noted in this testing that the tuners in consumer electronics hardware seemed to be sensitive to the differential voltage between the braid and the center conductor on the drop cable. This would be consistent for a tuner designed specifically for broadcast

signal reception. The tuners in the cable converters typically have a single-ended input from the center conductor of the coax. The results listed below consider both irradiated and conducted signals.

Technically, any kind of signal not delivered on the cable which is of the proper frequency and amplitude could interfere with and degrade the video. There are two general types of interfering signals, coherent and non-coherent. Coherent signals are those which originate from the same original source, such as a television transmitter. Non-coherent signals are those which come from other sources, such as business radio transmitters, and leakage from other household appliances. The chart in figure 1.2.1 depicts the field strength levels ambient to typical households in the US resulting only from VHF and UHF broadcast television transmitters, thus being coherent signals. Proposed later work at CableLabs would investigate the susceptibility of the CPE to vertically polarized business radio transmissions and to interference in the 40+MHz IF band of television receivers.

The CableLab's effort at Carl T. Jones Corporation, a nationally recognized and honored testing laboratory which has been conducting programs such as this since 1936, existed in part to measure the susceptibility of television receivers, videocassette recorders, and cable converter boxes to both irradiated and conducted DPU. The units tested included the numbers shown in figure 1.3.1 as received from a sampling of manufacturers ranging from the highest to the lowest in marketshare.

Television Receivers	**35**
Videocassette Recorders	**8**
Cable Converters	**14**

Figure 1.3.1 Sample universe of CPE tested.

In CableLab's arrangements with the EIA regarding the DPU test program, it was agreed that we would not make public the performance of any particular brand or model tested. Rather, the testing results from DPU, as are shown in figure 1.3.2 below indicate only the best performing unit tested, the poorest performing unit tested, and the median, or that set, if it existed, where half the units performed better and half worse.

The criteria used in the CTJ tests, explained in greater detail in section 3.0 below, recognizes the generally accepted point of perceptibility for interference from coherent signals; notably when the interfering signal reaches an amplitude 55 dB below the sync tip of the desired video signal. This point is further justified in section 5.0 below. Thus, the results shown in figures 1.3.2 and 1.3.3 below represent that point when an interfering signal will be just perceptible to the average viewer observing a television receiver or as displayed from a VCR with that level of interference, or as processed by a cable converter with that level of interference.

Further, the numbers below, as with the STC chart above, do not take into consideration any mitigating factors, such as placement in the home, the degree of building attenuation applicable, urban/suburban clutter, unusual height above ground, ducting possibilities, the orientation of the set relative to the transmitter of the interfering signal, or the type of programming being displayed. These factors will be discussed in our summary conclusions which are found in section 1.6 below and relate to the performance

specifications of CPE as described in part 17 of the Cable Act of '92, and in IS-23, which is being developed in the JEC.

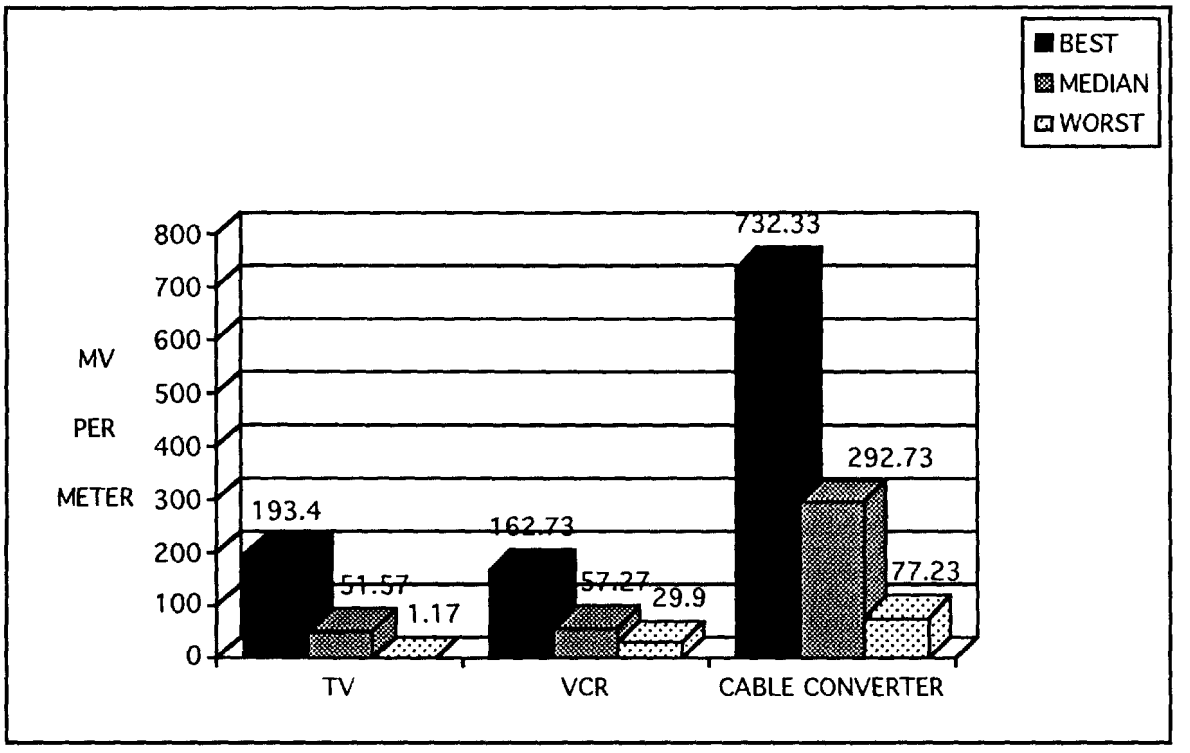

Figure 1.3.2 Ambient field strength in millivolts/meter to achieve the -55dB point of perceptibility averaged over channels 6, 12, and 78. (See Tables 3.5, 3.10, and 3.14 in Section 3.0 for details.)

There are several interesting points which are contained in this histogram. First it must be noted that all CPE exhibit a considerable spread between the best and worst units, television sets being about 165 times, VCRs about 5.4 times, and cable converters being about 9.5 times. This spread must be considered when setting minimum specifications for DPU performance in CPE. Secondly, since it appears that cable converters perform well enough on average to cure the DPU problem, then improving the TV and VCR performance numbers to match those of the converters would be adequate, but only if the performance span is considered in setting the acceptable range. One of the differences here is that cable technicians often work with several converters until one is found whose performance is equal to the problem, a capability not really available or practical for the consumer electronics customer trying to purchase a new TV or VCR. The conclusion that might be reached is that TVs and VCRs need to improve their worst case performance to a level comparable with the media converter.

In Figures 1.3.3 and 1.3.4 below, the performance of the CPE in the presence of conducted signals on both the coaxial signal cable and the power cord were measured. These tests were performed utilizing signals on channels 6 and 12, and measured at the -55 dB point of perceptibility. Among the test items there did not seem to be a consistent susceptibility to a particular mode of conducted DPU.

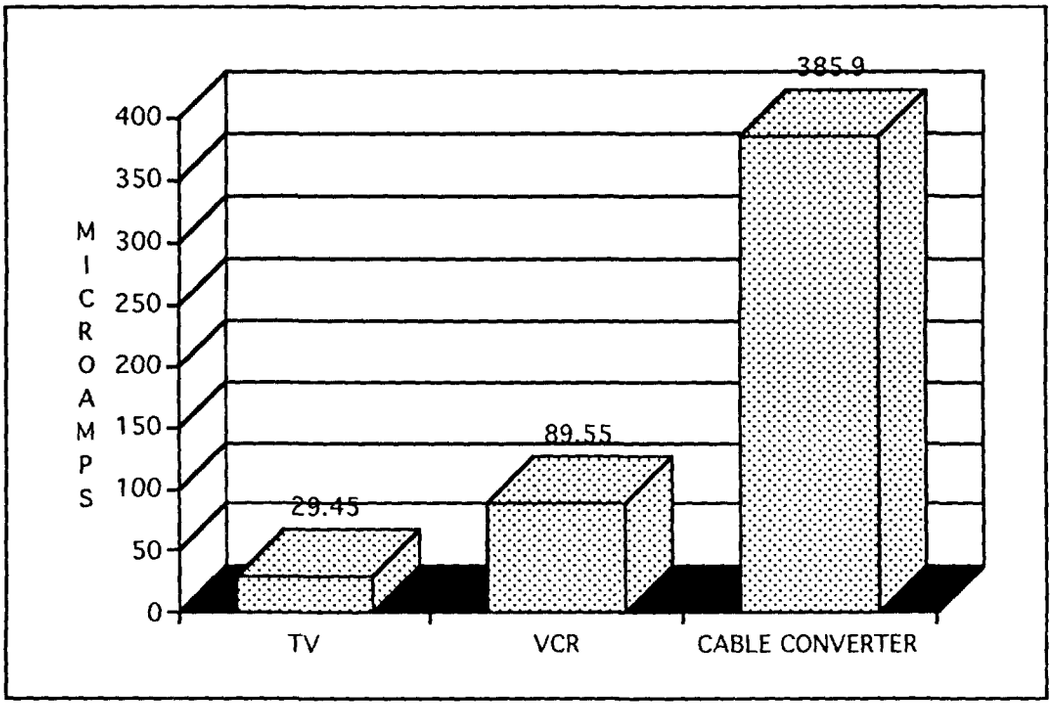

Figure 1.3.3 Susceptibility of CPE to conducted coherent direct pickup interference through current on the coaxial cable braid at the -55dB level of perceptibility, channels 6 and 12 averaged.

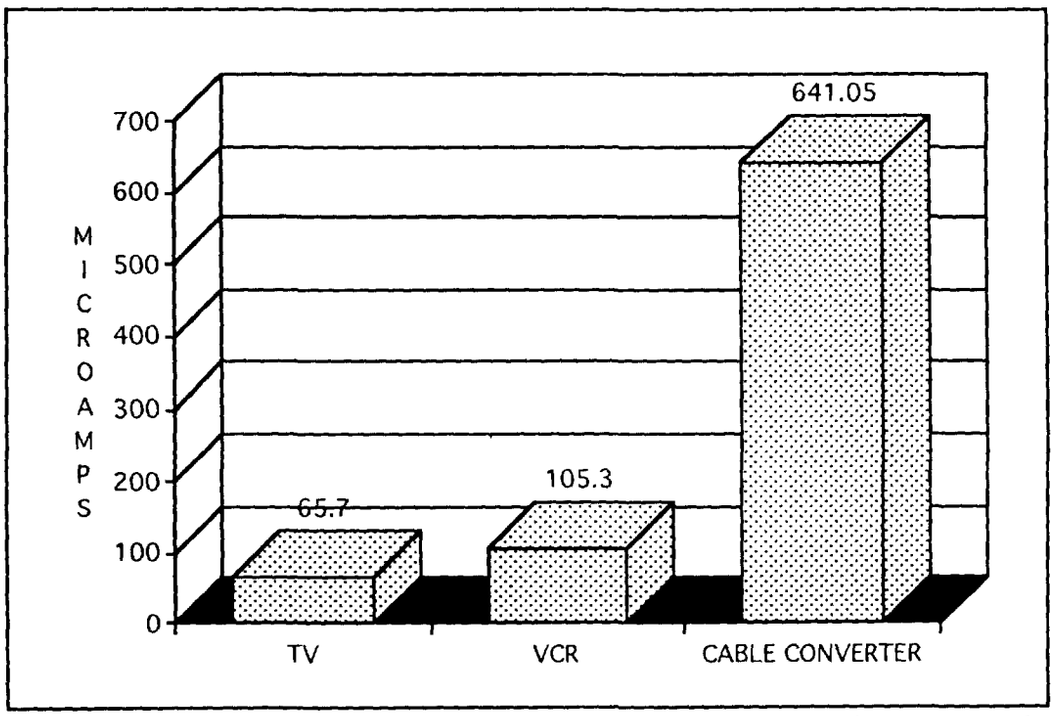

Figure 1.3.4 Susceptibility of CPE to conducted coherent DPU on the power cord at the -55dB level of perceptibility, channels 6 and 12 averaged.

In considering this data, one must remember that it is generally accepted that all consumer electronics hardware sold today have excellent broadcast or off-air tuners, whereas the cable converter has a tuner which is designed and oriented toward cable delivery and not toward the reception of off-air signals. The broadcast tuner is designed to be exceptionally sensitive to signals derived from all sources including those which are conducted, thus making it a perfect conduit for DPU when the unit is connected to a cable television delivery system.

The conclusion one might distill from the DPU tests is that the tuners in current television receivers and VCRs are ideally suited to receive off-air signals, and are considerably inappropriate when connected to a cable television delivery system, this because of DPU.

Therefore, if a piece of consumer gear is intended, labeled, promoted, and sold to be used only with broadcast signals, or only with a cable converter placed before it in the signal stream, the current tuners in the television receivers are sufficient.

However, if the consumer gear is intended to be usable with cable systems either without a cable converter or with a decoder interface, then an accommodation must be made when connected to such systems to remove the interfering DPU signals irregardless of their source of ingress, whether through irradiated or conducted modes, to a level which will not be perceptible to the customer.

1.4 Receiver Performance

In the past, the FCC has been reticent to impose any performance standards on consumer grade hardware, preferring to leave that as a marketplace issue. Since cable has become the marketshare leader in the delivery of video in the United States, certain factors at the retail point-of-sale has caused the consumer to become confused as to the expected performance of the intended purchase. In all but a very small percentage of high-end consumer electronics stores, the television receivers are all displayed with the exact same material delivered primarily from a nearby laserdisk player or other such source, and/or broadcast signals. In this most common case, the consumer cannot ascertain the consumer electronics' compatibility with cable (which is much different than the other sources), at the time of purchase, because the stores do not generally provide access to the local cable system. Therefore, the selection of consumer hardware based on their compatibility with cable delivery systems is not currently resolvable at the point of sale. For this reason, there are several other tuner performance issues which need to be specified to avoid confusing and misleading the consumer.

In devising these tests procedures, eight parameters of CPE performance were considered. These parameters are taken from those listed in the IS-23 performance document which is currently being crafted in the EIA/NCTA Joint Engineering Committee (JEC) through a bi-industry subcommittee. These test procedures were selected after consideration by CTJ of existing practices for performing such tests among consumer and cable manufacturers both domestic and foreign, and as discussed in extensive technical documents. Considerable time was spent in proving the test procedures by varying the facility elements and finally in retesting many of the same products used in the DPU considerations as a sort of "test of the test." These test procedures were released to the above JEC for their examination on October 12, 1993. While the procedures must be represented as unapproved as yet by the consumer caucus of the JEC, the exhaustive certifications performed at CTJ has convinced CableLabs and the cable caucus that any substantive and supported changes suggested will vary the results in only a very minor fashion, and not the scale or proportion of the results in any way.

The goal of this work at CTJ was two fold. First, it was anticipated that the test procedures developed for each of these performance parameters will be canonized, or modified and canonized, or equivalent alternatives procedures suggested, these becoming the benchmark techniques for measuring each of the eight parameters. Secondly, it was anticipated that the actual performance numbers developed will give a good measure of the state-of-art currently existing among the consumer electronics and cable equipment manufacturers relative to these factors. Note that the work at CTJ was not designed and is not meant to show preference to any particular consumer product, or between the consumer manufacturing or cable industry view of the interface, but rather to build a foundation of commonly accepted procedures, technology, and information from which meaningful remedies for problems at the interface can be developed.

The following pages list each of the performance issues and the results of the test procedure verifications completed at CTJ. Please refer to Section 4.0 of this report for details.

1.4.1 Re-radiation of Cable Signals

The cable industry is required under the Cumulative Leakage Index (CLI) performance standard set by the FCC in Part 76.605 (a)(12) of their Rules and Regulations to limit the leakage or the egress of RF energy out of the delivery system back into the environment. As cable has complied with this directive, concern has been expressed as to determining what contribution, if any, CPE might make toward the CLI through the leakage and reradiation of cable signals. Note that this does not imply that CPE is currently required to meet the Part 76 standards. Nonetheless, this federal standard limits the radiation from a cable delivery system to 15 microvolts/meter at a distance of 30 meters for frequencies less than or equal to 54 MHz or greater than 216 MHz. Similarly, limits are placed at 20 microvolts/meter at 3 meters between 54 and 216 MHz. The test measurement system was designed and calibrated to have sufficient sensitivity to measure signals in light of the FCC requirements.

As noted in Table 4.2 below, only two of the 56 CPE tested, both television receivers, presented any re-radiation of cable signals above the FCC limits. All units tended to re-radiate higher levels of signals as frequency increased, but all were well within limits except these two units, both of which would have failed the Part 76.605 (a)(12) cable CLI emission limits on channels 37 and 53, if it were to be applied against CPE.

1.4.2 Local Oscillator Leakage and Backfeed

In the single conversion tuners found in most consumer electronics, there is a single local oscillator (LO) whose signal is used to heterodyne the incoming RF television transmission down to an intermediate frequency which is in the 40 MHz region. In converters built for the cable industry, a double conversion process is utilized, requiring two such oscillators, each being isolated from the other and from the balance of the circuitry. In the single conversion tuners in most consumer gear, the local oscillator frequency falls within the cable delivery band, while the frequencies used in the cable converters typically fall outside the band. It is recognized that in the future, consumer manufacturers may exercise some changes to the frequency of these signals, and this will require further investigation.

In the in-band case, if the emanations from these oscillators are conducted out of the tuner package on the interconnecting wiring, they serve as a source of degradation to other CPE devices connected nearby, and if sufficiently strong, to traverse the cable drop and ingress into the cable system as noise, or through the cable tap to the drop of a neighboring subscriber as interference. The degree to which these local oscillators are isolated to within the tuner package is a performance factor of interest to the JEC at the interface, and is part

of the IS-23 deliberations. In this test, any spurious emissions which exceed -35 dBmV within the spectrum up to 600 MHz were recorded. The worst case situation is where the LO in the TV being generated while viewing one channel degrades the reception of another channel being recorded on the co-located VCR, or vice-versa. The results of measuring the LO leakage in various CPE is shown in Tables 4.3, 4.4, and 4.5.

This phenomena, like many others in these investigations, seems to be directly proportional to the frequency of the channel tuned. Television receivers showed no emanations above the recommended level on channel 3, but numerous instances of problem levels on channels 12, 53, and 74. Specifically, 17% of the test items had problems on channel 12, 31% on channel 53, and 60% on channel 74.

Videocassette recorders were quite similar, showing 13% having problems on channels 3 and 12, 26% on channel 53, and 50% on channel 74.

Cable converters showed no emissions above the recommended level on any channel, but did follow the precedence set by the other CPE in scoring somewhat worse on the higher frequencies.

1.4.3 A/B Switch Isolation

All VCRs, some TVs, and some cable converters are equipped with an A/B switch to provide for the selection of more than one input source to the CPE for use. In the case of the VCR, the choice is between the tape playback unit in the VCR or passing the incoming cable signal on to the television receiver.

If insufficient isolation exists between the two external ports, or between any unselected external port and the common port, then a condition of signal crossfeed will exist, which may result in degradation to the viewed or recorded signal. The FCC requires in Part 15.606 of their Rules and Regulations that A/B switches present a minimum of 80 dB of isolation for frequencies between 54 and 216 MHz, and 60 dB from 216 to 550 MHz. The external mechanical A/B switches currently in use by the cable industry all generally exceed 90 dB of isolation under any of the above operating modes at any frequency, and often exceed 100 dB at any frequency.

It was deemed important to know what the state-of-art is for A/B switches among currently manufactured CPE. The test procedures and the detailed results are listed in Section 4.0 of this document. This did not seem to be a great problem among the television sets tested, having only 3 instances where the results did not meet Part 15.606 on the 4 channels tested. In fact, 75% of the receivers had no problem on any frequency.

1.4.4 DPU Backfeed

This represents the condition wherein CPE which is susceptible to DPU not only causes its own picture to be degraded, as explained in Section 1.3 above, but also allows these ingressive signals to be fed back up the coaxial cable, thus serving as a degrading factor to other hardware in the home, or customers on the cable plant. The values contained in Section 4 represent the voltage present at the input port of the CPE while it is being irradiated with a 100 millivolt/meter field at the unit's point of maximum susceptibility, as explained in the DPU sections. Tests showed that the DPU backfeed is a function of the impinging radiation, and not related to the channel tuned on the EUT. The FCC requires a minimum of 18 dB of isolation between customers, but standard practice shows a practical isolation figure to be about 22 dB. If the -55 dB D/U ratio is the point of perceptibility,

then a -33 dB level out of the RF input of the EUT is sufficient to reach the threshold of perceptibility.

The results show that 37% of television receivers had DPU backfeed above the point of perceptibility on channel 6, followed by 34% on channel 12, 26% on channel 78, and 17% on channel 59. In general, there was a high correlation between those television receivers which tested poorly on DPU, and those which did poorly in DPU backfeed. Interestingly, no videocassette recorders or cable converters displayed DPU backfeed above the level of perceptibility.

Further tests of spurious backfeed were conducted to look for any emission from the EUT present at the cable fitting in the 54 MHz to 550 MHz range which might cause interference in connected CPE. Any signals greater than a -35 dBmV were recorded. The emissions found in television receivers all seemed to be related to the 40 MHz IF frequency, but in no case were they above the -35 dBmV level. No such emanations were found in videocassette recorders. All converters except one, a commercial aftermarket tuner-only product, showed no significant emanations. The failed converter showed a very strong -1.7 dBmV backfeed at 144 MHz when tuned to channel 12, and -2.8 dBmV backfeed at 336 MHz when tuned to channel 53. It was below the test facility sensitivity on the two other channels.

1.4.5 VCR Through-Loss

The usual and accepted configuration for introducing cable to an arrangement in the home having both a TV and VCR is to route the cable drop to the cable converter, thence out of the converter to the VCR, and thence to the television receiver. In cable systems where a converter is not required, the usual practice is for the drop to be connected to the VCR input port, with the signal path thence traveling to the TV. If there is excessive signal loss in passing through the VCR, a noisy picture may be presented to the viewer. This probably is not an issue at the FCC prescribed input levels if the division of the input signal energy available on the cable is performed in a symmetrical fashion, with half going to the VCR and half to the balance of the system. However, it has been noted that some VCRs perform asymmetrical splitting of the signal, diverting a disproportionate amount of the signal energy internally to the recording unit, thus obviating the cost of some amplification within the VCR.

It was decided to perform a VCR through-loss measurement on our sample set to determine the state of art in the industry today. The test procedures utilized and the results are contained in Section 4.0 of this report. Of the eight VCRs tested, all were contained in the range of 3.4 to 5.0 dB through-loss, as tested over channels 3, 12, 53, and 74. The average through-loss for the eight samples over the four channels was 4.05 dB.

1.4.6 Adjacent Channel Rejection

The ability of CPE to reject the in-band noise contribution from channels adjacent to the tuned or desired channel is an important factor in the performance of receivers. It is primarily the lower adjacent aural and color subcarriers, and the upper adjacent video carrier which create the problem. This issue has been addressed in the broadcast industry by leaving adjacent channels vacant, where possible. However, in the cable industry, where virtually all channels have upper and lower adjacents, and at relatively high levels, as specified by the FCC, adjacent channel interference becomes a very important performance factor having great impact on picture quality.

The measurements, as described in Section 4.5.6 below, are divided into three parts, that for the lower adjacent color subcarrier, that for the lower adjacent aural carrier, and that for the upper adjacent channel video carrier. Again, the -55 dB D/U ratio was used as the threshold of perceptibility for degradation in the viewed picture. The desired video carrier was set at +10 dBmV. The upper adjacent video carrier was set at +10 dBmV, the lower adjacent color subcarrier at -2 dBmV, and the lower adjacent aural carrier at 0 dBmV.

Television Receivers - Lower Adjacent Color Carrier Rejection. Three of the 35 television receivers showed a failure in lower adjacent color subcarrier rejection, all on a single channel only, one unit on channel 12, the other two on channel 53. All of the other numbers for the television receivers were quite respectable, resulting in averages for all receivers at least 10 dB in margin better than the point of perceptibility.

Videocassette Recorders - Lower Adjacent Color Carrier Rejection. One VCR failed the lower adjacent color subcarrier rejection test on all channels, averaging a -49.9 dB D/U level. Two of the eight test units failed on channel 74 by very small margins. All other numbers were acceptable, and the averages for all test items were at least 5 dB better than the level of perceptibility.

Cable Converters - Lower Adjacent Color Carrier Rejection. No cable converter exhibited insufficient rejection of the lower adjacent color subcarrier to the point of perceptibility on any channel.

Television Receivers - Lower Adjacent Aural Carrier Rejection. Two of the 35 units had insufficient lower aural rejection on all channels while two other sets were perceptible only on channels 53, and 74. The average D/U for all 35 receivers tested on all channels was at least 9 dB better than the level of perceptibility.

Videocassette Recorders - Lower Adjacent Aural Carrier Rejection. Three of the eight VCRs tested showed no perceptible interference on any of the four channels tested. Three of the test items failed on all four channels. One VCR failed on channels 12, 53, and 74, while the final unit failed only on channel 74. However, there was little or no margin in the averages over the four channels above the point of perceptibility, the highest being only 1.8 dB above the 55 dB ratio.

Cable Converters - Lower Adjacent Aural Carrier Rejection. None of the cable converters exhibited insufficient rejection of the lower adjacent aural carrier.

Television Receivers - Upper Adjacent Video Carrier Rejection. No television receivers exhibited insufficient rejection of the upper adjacent video carrier.

Videocassette Recorders - Upper Adjacent Video Carrier Rejection. No VCRs exhibited insufficient rejection of the upper adjacent video carrier.

Cable Converters - Upper Adjacent Video Carrier Rejection. No converters exhibited insufficient rejection of the upper adjacent video carrier.

1.4.7 Image Rejection

The effects of insufficient image rejection is a noise contribution to the desired channel similar in nature to adjacent channel interference. However, it is the signals occupying the upper portion of the channel which is 14 channels above the desired, and the lower portion of the channel which is 15 channels above the desired channel which contribute the noise energy.

For NTSC, it is the aural carrier 14 channels above, and the visual channel 15 channels above which combine with the desired signal to generate the distortions. The FCC requires on cable that visual carriers measured at the CPE vary no more than 10 dB, plus 1 dB for each 100 MHz of bandwidth above 300 MHz. Therefore, in our test 550 MHz spectrum, there can be a variation as high as 13 dB. In the tests, the desired video carrier was set at 0 dBmV and the image carrier at +13 dBmV, according to the above.

A review of Table 4.7A under Tab 4 shows that the image rejection performance of television receivers varies significantly according to the selected channel. On channels 3 and 12, the average rejection was found to be 66 dB, while on channels 53 and 74, the average image rejection was 58.5 dB. None of the television sets exhibited perceptible or greater interference on channel 3, and only four were above the threshold on channel 12. However, 50% of the receivers had perceptible interference on channel 53 and 67% were above threshold on channel 74.

1.4.8 Tuner Overload Distortions

Tuner overload performance has become increasingly important for CPE connected to cable as the number of channels carried thereon has continued to increase. The inability of the tuner to accept the aggregation of these high-level signals without generating excessive distortion products through the non-linear characteristics of the receiver's RF input circuitry results in the issue. The two most destructive products generated in this process are referred to as Composite Triple Beat (CTB) and Composite Second Order (CSO). The CTB product falls on the video carrier of the desired channel, and the CSO is either at $\pm$ 0.75 MHz or $\pm$ 1.25 MHz from that carrier, according to the channelization plan of the system, standard or IRC.

The CPE was tested according to the test plans and procedures described in 4.0 below, and generated the following results.

A total of 66% of the television receivers tested exhibited degradation above the "just perceptible" level on at least one channel and in at least one category. The television receivers showed perceptible degradation on all four of the channels tested.

A total of 50% of the VCRs tested showed perceptible degradation on at least one channel and in at least one category. However, the degradation was perceptible only on channels 53 and 74, and not on channels 3 and 12.

A total of 36% of cable converters showed perceptible degradation on at least one channel and in at least one category, with the visible degradation present on each of the four channels tested.

1.5 Viewer Perceptibility and the Selection of the -55dB Benchmark

There is always a great paradox in testing factors related to viewing television. One would like to devise objective techniques for testing receiver performance, since subjective tests often lack repeatability and precision. Subjective tests which are designed to have precision and reliability, often require such extensive procedures as to make them impracticable for widespread use. On the other hand, it is the subjective viewing of the television receiver, regardless of its signal source, which determines the acceptability of the delivered video to the viewer. Extensive testing has been accomplished in times past, attempting to bridge the gap, to enjoy the advantages of objective testing, while yet relating the results to some

measure of subjectivity, such as the threshold of viewer perceptibility or the threshold of viewer annoyance.

These past studies have always been indexed to some particular form of interference, such as NTSC co-channel signals interfering with NTSC signals, or NTSC signals being degraded by non-coherent, non-video signals, such as in-band business radio emissions. Then, based on the type of interference, some measure could be made which would state that statistically the threshold of perceptibility occurs when the interfering signal is *N* dB, below the sync tip of the desired video signal.

The point of Dr. Bronwen Jones' effort, which can be found in Section 5.0 below, is to perform a series of subjective perceptibility tests using exactly the same facility CTJ had used for performing their objective DPU measurements. We had assumed at the outset of the project that the -55dB desired to undesired ratio (D/U) was appropriate for the configuration used at CTJ to test for DPU susceptibility. In fact, the DPU measurements are linear, so the results contained herein can be adjusted based on the consensus ratio without redoing the tests.

The result Dr. Jones developed in her research shows, however, that the -55 dB point is indeed the threshold of perceptibility among the viewing panels assembled and supports the supposition made in establishing the DPU test procedures at CTJ. Please refer to Section 5. below for a full treatment of the findings.

1.6 Conclusions and Recommendations

In this section an attempt will be made to summarize the results of the above testing in a narrative format, drawing such conclusions as are supported by the data.

We have learned from the Stern study:

- That 65.4% of all US TV households reside in fields of 10 millivolts/meter (mv/m) or greater,
- That 54.8% of all US TV households reside in fields of 31.62 mv/m (90 dBu) or greater,
- That 40.8% of all US TV households reside in fields of 100 mv/m or greater,
- That 6% of all US TV households reside in fields of 1 volt/meter or greater.

In each of the 60 million cable homes there are an average of 2.3 television receivers, 1.8 videocassette recorders, and 0.33 cable converters. This yields about 138 million TVs, 108 million VCRs, and about 20 million cable converters in cable TV households in the US. Using the Stern findings, this would mean that:

- 90.25 million TVs, 70.6 million VCRs, and 13.1 million cable converters *which are in cable households* reside in fields of 10 millivolts or greater,
- 55.2 million TVs, 43.2 million VCRs, and 11 million cable converters *which are in cable households* reside in fields of 100 millivolts or greater,
- 8.28 million TVs, 6.48 million VCRs, and 1.2 million cable converters *which are in cable households* reside in fields of 1 Volt/meter or greater.

Consider the CTJ results for irradiated DPU, which shows that for an average of three channels and with the CPE in an average orientation for susceptibility:

- The worst case TV reaches the point of perceptibility at 1.17 mv/m
  The worst case VCR at 29.9 mv/m, and
  The worst case cable converter at 77.23 mv/m.

- The median TV is perceptible at 51.57 mv/m,
  The median VCR at 57.27 mv/m, and
  The median cable converter at 292.73 mv/m.

- The very best TV is perceptible at 193.4 mv/m,
  The best VCR at 162.73 mv/m, and
  The best cable converter at 723.33 mv/m.

Superimpose these two lists and the size of the DPU problem begins to emerge. Note that these numbers consider only irradiated co-channel, and not that conducted on the cable braid or on the power cord. The two modes are interrelated, and we have listed the conducted results in the body of the report for reference, but do not list them in the conclusions because the conducted test procedures developed at CTJ have not yet been accepted by all involved consumer manufacturers and the EIA.

In the past, because of the cost of extra outlets, customers have not typically reported all TVs and VCRs in the home as connected to cable. Because of the Cable Act of '92 ruling making extra outlets free of monthly costs, the cable industry has already noted a surge of extra outlets either being connected or admitted to for the first time. It is expected that this trend will continue until virtually all TVs and VCRs found in cable households are connected to cable.

In the Appendix there is a discussion of a series of mitigating factors which tends to modify the actual interfering signal level or the exposure of the CPE to such signals. These mitigating factors consists of:

- Ducting - An unusual phenomena in which the transmitted signals are channeled through a building in a non-standard fashion as a function of the building's physical structure.

- Building Attenuation - Considers the shielding properties of the building structure. This is a statistical function which can range from zero to significant attenuation, based on the placement of the CPE in the home and the type of building construction encountered.

- CPE Orientation - As demonstrated in the DPU testing, CPE is usually most susceptible to interference if the radian passing through the tuner of the unit is directed toward the interfering signal source. Other orientations offer some attenuation to the signal.

- Height Above Ground - There is a nominal 20 Log increase in the strength of the interfering signal relative to the height of the CPE above ground level.

- Urban/Suburban Clutter - A factor of the relative juxtaposition of the interfering signal source and the CPE, and the topology of the earth and structures between the two.

The difficulty in applying mitigating factors is that one cannot depend upon achieving a high level of protection over a broad range of installations, or over a long period of time in any one installation, with the results being highly stochastic. The experience of the cable industry is that service calls which are shown to result from DPU most often occur with the introduction of new CPE in the home, or when existing units have been relocated therein. While the activity level of the consumer electronics retailer is pretty much isolated to the time of sale, the cable operator's responsibility for satisfactory service continues from month to month. From the cable standpoint, it matters little whether the DPU problem became apparent with the purchase of new hardware, or at a point years down the road, it still requires a truck roll, the services of a technician, and the installation of a cable converter to fix the problem.

What has become clear during these studies is that adding mitigating factors to the other parameters in an attempt to develop a single performance number for CPE has the effect of dilating the window of acceptability of the test items. As a result of the Cable Act of '92, the FCC has called upon the cable and consumer industries to negotiate a single number which shall represent a limit below which no TV, VCR, or cable converter shall show perceptible DPU interference. This implies that a statistical process, which represents a range of performances based on both controlled (such as CPE design and construction) and uncontrolled (such as mitigating factors) issues, must be reduced to a single number, below which the performance range cannot extend. Considering the Stern data, it would appear that a 95% solution to the problem will fall into the 1.0 volt/meter range.

Unlike the DPU findings above, we published the results of the receiver performance tests more as a benchmark to determine the current state-of-art for both consumer and cable grade hardware, and primarily to assist in the completion of the engineering labor supporting the IS-23 effort in the JEC. As mentioned earlier, the test facility drawings and procedures used in these tests have all been forwarded to the membership of the JEC for analysis and comment. There will no doubt be changes suggested for these tests, all of which will be included where appropriate. Considerable non-trivial variations on the individual test plans, procedures, and facilities were tried at CTJ with the differences in results varying little more than 2.0 dB. This leads us to have confidence in these procedures as to their accuracy in portraying the performance parameter tested. However, since others may derive procedures which are either easier or cheaper to implement, or for any other legitimate reason may show increased promise, all constructive comments will be considered, tested, and implemented or rejected based on merit in the eyes of the JEC.

What is clear from these performance measurements, is that all CPE could bear some improvements in several of the eight areas considered. Among TVs and VCRs the problems measured here result almost exclusively from the use of designs which are optimized for off-air reception and are not appropriate for the different delivery conditions encountered when connected to a cable system. Since cable cannot regress to simulate the conditions found in the broadcast environment without losing its advantages and its very reason for existence, improvements can only be found in adapting the terminal devices, the CPE, to the delivery system. This is precisely what has occurred in all other areas of telecommunications, including wire and RF telephony, LANs, MANs, business satellite systems, microwave delivery systems, and in home DBS terminal equipment.

As we now stand on the threshold of the era of digital television transmission, tests performed at the Advanced Television Test Center, by CableLabs, and at other facilities

underlines the fact that all receivers must be improved in all eight of the above factors, plus several more, including phase noise, group delay, and residual FM, if the transitional hybrid CPE currently being planned by the consumer manufacturers is to be usable through its expected lifetime.

[redacted]

2.0 Characterization of the RF Environment

STERN TELECOMMUNICATIONS CORPORATION

307 FIFTH AVENUE
NEW YORK, NEW YORK 10016
212 725 5470
FAX 212 725 5632

POTENTIAL IMPACT OF DIRECT PICKUP INTERFERENCE

BACKGROUND

Direct pickup interference (DPU) is a particular form of ingress wherein off-air broadcast signals interfere with signals delivered on the same channel via the cable system. DPU was recognized as a serious potential problem from the earliest days of cable television. The problem was temporarily solved by the introduction of CATV converters. Those new converters, built with shielded input circuits impervious to DPU, replaced the TV set tuner.

Responding to the growth of CATV channel capacity and the expanding subscriber base, the consumer electronics industry developed "cable-ready" TV receivers and VCR units. These receivers and VCR's were capable of tuning to all the channels in the CATV spectrum without the need for a cable channel converter. This family of cable-ready equipment included new viewing, recording, and remote control features.

In homes where converters were required to descramble programs, the consumer could not use the desirable features built into the new cable-ready receiver. Where it was possible to remove a converter installed to serve a cable-ready set, the consumer's cable-ready TV receiver often experienced DPU.

Equipment manufacturers, cable system operators and CableLabs have been searching for conditional access control methods that would allow the consumer to enjoy all the special features of new cable-ready TV equipment. Traps, interdiction, Multiport decoders, and broadband point-of-entry control devices are being tried, but the DPU problem persists.

EXPLANATION OF DPU

Direct Pickup Interference (DPU) is the name given to a class of co-channel interference caused by the mixing of (1) the desired signal, which enters the TV receiver through the input terminals, and (2) the undesired signal which enters the TV receiver through one or more other paths. Classically, co-channel interference is caused by the TV receiver antenna's reception of two different signals sharing the same channel.

There are two distinct types of co-channel interference: **coherent** signal interference and **non-coherent** signal interference.

Coherent co-channel interference is caused by the mixing of two signals transmitted on the same carrier frequency, but not necessarily in time-phase with one another. Examples of over-the-air coherent interference are (a) reception of two different TV stations operating on the same channel and locked in frequency, and (b) reception of two or more signals from the same TV station by a direct path from the transmitting antenna and from one or more longer reflected signal paths.

Coherent DPU may occur in a TV receiver connected to a cable when TV station signals are carried "on-channel" in an area of high ambient signal strength. Coherent interference manifests itself as one or more ghost images superimposed on the primary or desired image. The perceptibility of these ghost images is determined by the strength of the interfering signal with respect to the desired signal and the phase difference between the signals. The strength of the interfering signal determines the contrast of the ghost. The phase difference determines the offset or placement of the image on the screen and affects the visibility of the ghost.

Non-coherent co-channel interference is caused by the mixing of two signals transmitted within the same TV channel but at a different carrier frequency or frequencies. Over-the-air non-coherent interference is caused by (a) reception of two different TV stations operating on the same channel, (b) reception of a harmonic from a two-way radio system or an FM station while the TV receiver is tuned to a TV channel, or (c) reception of spurious signals from electrical machinery while the TV receiver is tuned to a TV channel.

Cable non-coherent interference occurs when the TV receiver is tuned to a cable channel whose frequency spectrum is used locally for over-the-air TV broadcasting, two-way business radio operations, or FM broadcasting.

Non-coherent interference generally manifests itself as alternating light and dark bands which may move through the picture. The contrast between these bands and the desired picture is determined by the relative strength of the desired and undesired carriers. Non-coherent interference can also cause other presentations, depending on the type of signal, and the spectral location of the signal.

CABLELABS STUDY

In January 1992, CableLabs asked Stern Telecommunications Corporation (STC) to undertake a study to answer the following question:

> What is the extent of the DPU problem that may result from the use of cable-ready TV equipment in a 550 mHz environment without converters?

STC undertook to answer this question by a combination of research - both a literature search and laboratory experimentation. The literature search included reports of investigations into the cause and effects of co-channel interference, as well as documentation and analysis of DPU complaints from cable subscribers.

For laboratory experimentation, measurements were made of the shielding efficiency versus frequency of a representative sample of recently manufactured cable-ready TV receivers.

In addition, a computer model was designed for this project. The model analyzed variables of field intensity contours from multiple sources and related the resultant product with census data to develop household counts subject to a specific field intensity value, or greater.

Literature Research

During the early years of television broadcasting, 1945 through 1965, extensive research was conducted into co-channel interference to determine the minimum required spacing to avoid interference between stations utilizing the same channel. Studies conducted by Mertz indicated that coherent interference becomes imperceptible at desired-to-undesired signal ratios of 40 dB. The work of Mertz was followed by Lessman who found perceptibility present at desired-to-undesired signal ratios of 36 dB. Other studies and published reports from JTAC, TASO, CTAC, RCA, and CBS generally agree that desired-to-undesired signal ratios of 35 to 40 dB are required to avoid coherent co-channel interference.

Field Information and Laboratory Tests

The 100 mV/meter (100 dBu) level was chosen as a benchmark for this analysis after two research efforts were completed. The first was an examination of field service records from several cable television system operators. Their records show a dramatic change in the number of complaints related to DPU as the ambient field strength approaches 100 mV/meter. The second effort was the review of results obtained from our laboratory tests of shielding

efficiency on several current model television receivers. The tests showed that each set exhibited visible DPU interference on at least one channel when immersed in a 100 mV/meter.

Laboratory testing was undertaken to answer a number of questions relative to the CableLabs DPU study. The questions include:

(1) Does the orientation of the receiver affect direct pickup?

(2) Does the "dress" of the coaxial cable input lead affect direct pickup?

(3) Does the "dress" of the AC cord affect direct pickup?

(4) How much voltage reaches the tuner for a given ambient field intensity?

(5) Does the direct pickup at a receiver vary significantly with the frequency?

(6) What level of isolation or "Receiver Effective Length" (REL) is required to insure a specific desired-to-undesired interference ratio in a given field?

(7) Do the sample receivers tested offer immunity from direct pickup interference in a 100 dBu/m field?

The tests were conducted at Carl T. Jones Corporation laboratory at Springfield, VA, between July 20 and 24, 1992. Five receivers were tested.

Representative Geographic Areas

Evaluating the potential extent of DPU interference required first that a geographic area for measuring these phenomena be television household distribution. For our sample we chose the top ten television ADIs, representing approximately 30% of US households. Furthermore, these ADIs represent a number of different population distributions in relationship to the site of broadcast transmitters. This varied population distribution made possible the extrapolation of results for urban and suburban America.

Computer Modeling

Having defined the geographic area for assessing the extent of DPU, we established the criteria for determining the number of households that might be subject to this interference. Whether or not a given household experiences perceptible DPU, and the severity of this interference, is determined by many factors.

1. The ambient field strength of the interfering signal with respect to the desired signal;

2. The TV receiver's ability to shield against the undesired signal;

3. The location of the TV set in the dwelling;

4. The channel or channels being viewed;

5. The number of TV sets in a dwelling.

The first factor is the only one that can be modeled, since the other data are not available. The model chosen defined as DPU "trigger points", field strengths 80, 90, 100, and 120 dBu, equivalent to 10 mV/m, 31.6 mV/m, 100 mV/m, and 1 V/m. The assumption was made that all households located in an area with this predicted field strength or greater, are assumed to have the potential for DPU.

The model assumed that:

All households located within an ambient of the "trigger point" field strength or greater are assumed to have the potential for DPU.

The television set or sets in the household will be located in an area subject to this field strength at some point in time.

The television set or sets will tune to the channel in which DPU is possible at some point in time.

The television receiver shielding will not prevent DPU at or above "trigger point" field strength on at least one channel.

A DPU model was applied to each of the top ten ADIs. The first step in applying the model was to determine the area subject to field strengths equal to or greater than the DPU trigger value. These field strength contours were developed using a program written by Communications Data Services, Inc. (CDS). This program predicts the distance from a television transmitter to a given field strength contour, based on the FCC's F(50/50) propagation curves.

These curves relate transmitter Effective Radiated Power (ERP) and antenna height above average terrain to the distance to a contour within which at least 50% of locations receive a given field strength or greater at least 50% of the time. The field strength contours developed for this study ignore the vertical and horizontal patterns of the actual transmitting antennas.

The vertical pattern has the effect of reducing the ambient field strength at ground level in the immediate vicinity of the transmitter. An examination of selected field measurements revealed a mean field strength of approximately 100 mV/m (100 dBu) over the region from the transmitter to the 100 mV/m contour predicted by the FCC F(50/50) curves. Beyond this contour, the measured field strength corresponded closely to the predicted levels. Horizontal directivity is not considered because the STC DPU model considers the actual population distribution, not merely the population density.

CDS provides two versions of their broadcast contour program. The first version utilizes the antenna height over all of the surrounding terrain to determine a single distance to the selected contour. The second version determines the antenna height over average terrain along each of 16 equally spaced radials. Each of these heights is applied to the FCC F(50/50) curves to determine the distance to the contour along the matching radial. A contour is then created by connecting the endpoints of each of these radials using a "B-Spline" curve-fitting algorithm. Both of these programs were used in applying the DPU model.

The DPU model is based upon the areas subject to fields of selected mV/meter level, or more, from any broadcast source. If all of the broadcast facilities within a city are co-located, this area corresponds to the contour developed for the transmitter facility with the greatest coverage. However, if the broadcast transmitters are at separate locations, their contours may overlap, creating a composite area.

If the broadcast transmitters are separate, circular contours were algebraically combined to determine those which contribute to the maximum area. The second CDS program was run on each of these to develop more accurate contours, and the appropriate portions of this new contour combined to develop the composite area.

Once the contour had been generated, another CDS program was used to compare the area of the contour with data from the 1990 US Census. This program provided data on both the population and the number of households contained within the contour.

We have only included UHF stations operating on channels 14-27 in this study. Higher channels were ignored since the extension of cable systems beyond 550 mHz is largely experimental at this time. The introduction of 750 mHz cable systems and the authorization of new UHF-TV stations will have a significant impact on the potential for DPU.

Further experimentation is required to determine the potential magnitude of DPU interference from UHF-TV broadcasts. The higher transmitting power allowed for UHF transmitters results in the exposure of a larger segment of population to higher field strengths. However, experimentation to determine the desired-to-undesired signal ratio required for interference-free reception with 2 mHz separation of carriers must be conducted before the full DPU impact can be determined.

REPORT OF FINDINGS

The following tables summarize the results of computer modeling for four (4) ambient signal strength values.

The 120 dBu (1 Volt/meter) value was chosen as the maximum possible ambient which might be present under conditions of signal reinforcement from reflections, and at locations in the immediate vicinity of high power transmitter facilities.

In practice, broadcast design engineers try to keep the maximum radiated signal level to 100 dBu for VHF-TV and below 80 dBu for UHF-TV. An analysis of measured vertical patterns and the resultant estimated FCC F(50/50) field strength versus distance plots shows that values in excess of 110 dBu are rarely present two miles beyond the transmitter. Very few measurements are made at that close-in distance, but we have learned from a canvass of consulting engineers that the 100 dBu level is the most common maximum signal strength.

Table I summarizes the percentage of all US households, rural, urban and suburban, that may be subject to the indicated field strengths or a higher value. The information is presented for VHF-TV stations and separately for the combined contour of both VHF-TV and UHF-TV stations.

Tables II through V list the results of the computer modeling for each ADI and the percentage of households within each ADI that will be subject to the indicated field strength or higher values. At the bottom of the table, the data is aggregated as a percentage and, separately, as a percentage weighted by the number of TV households in each ADI. The resulting percentages represent a prediction relating to the total number of <u>urban and suburban households</u> in the US. (The values given in relation to urban/suburban may be translated to the total US households by using a factor of 0.77 to adjust for the fact that 77% of all US households are in urban/suburban areas.

Figures 1 and 2 are histograms of the data presented in Tables I through V.

Table I

Percentage of All US Households that May Be Subject to at Least the Indicated Field Strength from VHF-TV and/or UHF-TV Stations
(at frequencies below 550 MHz)

	80 dBu	90 dBu	100 dBu	120 dBu
VHF	61.5%	41.3%	19.9%	0.9%
VHF & UHF	65.4%	54.8%	40.8%	6.0%

Table II

DPU Potential Assuming 80 dBu Trigger Value in the Top Ten ADIs (50 to 550 MHz)

Area (ADI)	Total Number of TV Households	Percentage Subject to 80 dBu or Higher VHF Only	UHF & VHF
New York	6,760,400	76.9	84.5
Los Angeles	4,962,300	82.2	85.4
Chicago	3,023,600	78.0	87.4
Philadelphia	2,659,700	71.6	81.9
San Francisco	2,236,700	89.0	89.0
Boston	2,121,400	67.9	74.3
Washington	1,812,500	77.0	80.1
Dallas/Fort Worth	1,803,200	82.1	86.4
Detroit	1,728,100	93.8	93.8
Houston	1,465,700	94.3	97.6
Total	28,573,600		
Average Percentage		81.3	86.0
Average Percentage Weighted by Number of TV Households		80.0	85.4

Table III

DPU Potential Assuming 90 dBu Trigger Value in the Top Ten ADIs (50 to 550 MHz)

Area (ADI)	Total Number of TV Households	Percentage Subject to 90 dBu or Higher VHF Only	UHF & VHF
New York	6,760,400	45.2	73.6
Los Angeles	4,962,300	60.5	75.5
Chicago	3,023,600	51.1	69.7
Philadelphia	2,659,700	51.4	65.4
San Francisco	2,236,700	44.1	59.3
Boston	2,121,400	46.0	56.9
Washington	1,812,500	61.7	73.3
Dallas/Fort Worth	1,803,200	51.0	79.7
Detroit	1,728,100	73.9	73.9
Houston	1,465,700	73.6	84.1
Total	28,573,600		
Average Percentage		55.9	71.1
Average Percentage Weighted by Number of TV Households		53.7	71.3

Table IV

DPU Potential Assuming 100 dBu Trigger Value in the Top Ten ADIs (50 to 550 MHz)

Area (ADI)	Total Number of TV Households	Percentage Subject to 100 dBu or Higher VHF Only	UHF & VHF
New York	6,760,400	26.7	62.3
Los Angeles	4,962,300	14.7	44.0
Chicago	3,023,600	27.0	49.0
Philadelphia	2,659,700	32.2	57.8
San Francisco	2,236,700	34.5	40.9
Boston	2,121,400	13.5	39.4
Washington	1,812,500	34.9	56.6
Dallas/Fort Worth	1,803,200	14.7	61.6
Detroit	1,728,100	41.8	41.8
Houston	1,465,700	33.1	61.9
Total	28,573,600		
Average Percentage		27.3	51.5
Average Percentage Weighted by Number of TV Households		25.8	52.3

Table V

DPU Potential Assuming 120 dBu Trigger Value in the Top Ten ADIs (50 to 550 MHz)

Area (ADI)	Total Number of TV Households	Percentage Subject to 120 dBu or Higher VHF Only	UHF & VHF
New York	6,760,400	0.4	14.3
Los Angeles	4,962,300	0.0	0.0
Chicago	3,023,600	2.0	8.2
Philadelphia	2,659,700	0.8	4.7
San Francisco	2,236,700	6.0	15.5
Boston	2,121,400	0.6	2.8
Washington	1,812,500	2.3	11.0
Dallas/Fort Worth	1,803,200	0.3	7.6
Detroit	1,728,100	1.7	1.7
Houston	1,465,700	0.4	4.6
Total	28,573,600		
Average Percentage		1.5	7.0
Average Percentage Weighted by Number of TV Households		1.2	7.6

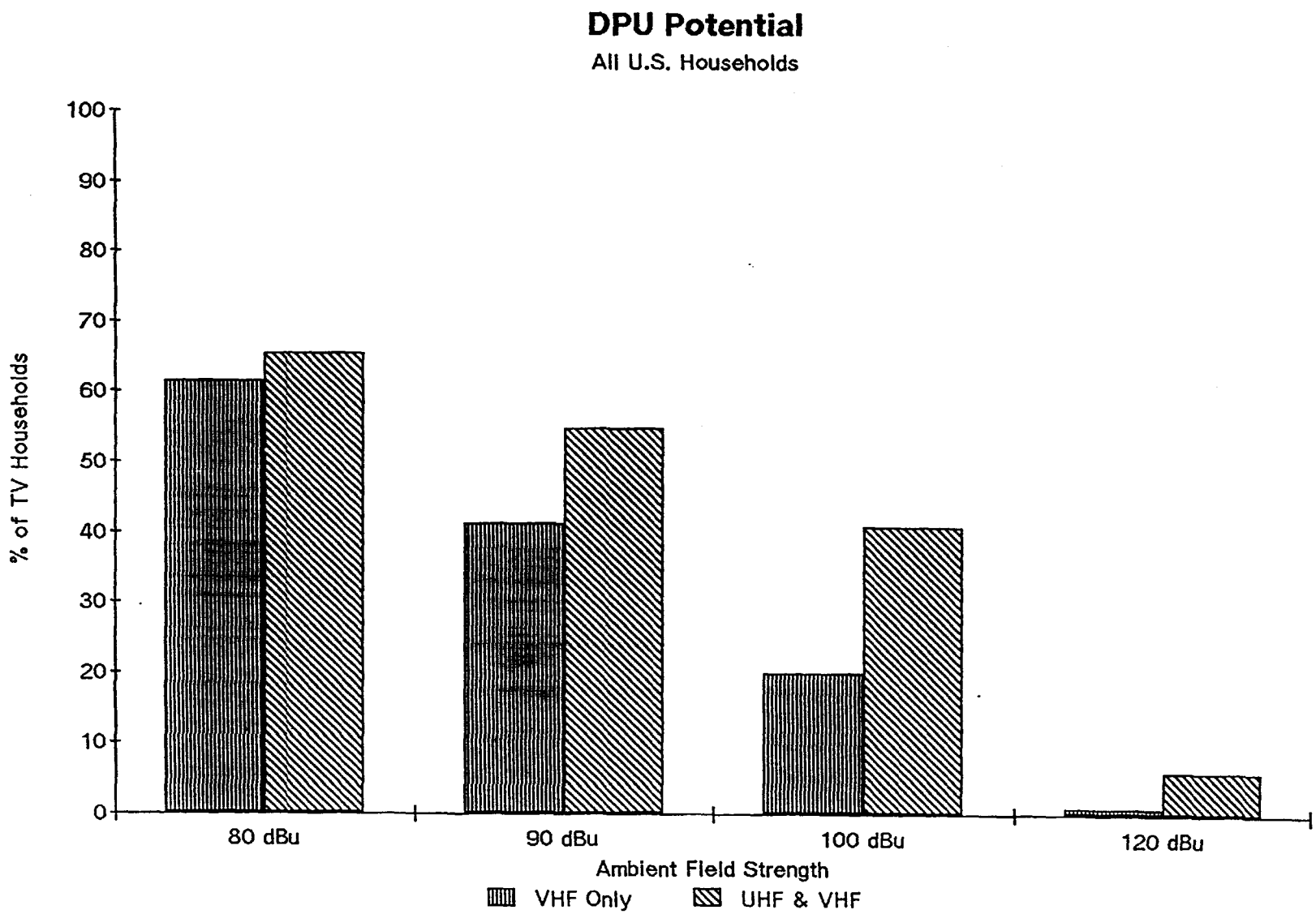
DPU Potential
All U.S. Households
% of TV Households
100
90
80
70
60
50
40
30
20
10
0
80 dBu
90 dBu
100 dBu
120 dBu
Ambient Field Strength
VHF Only
UHF & VHF

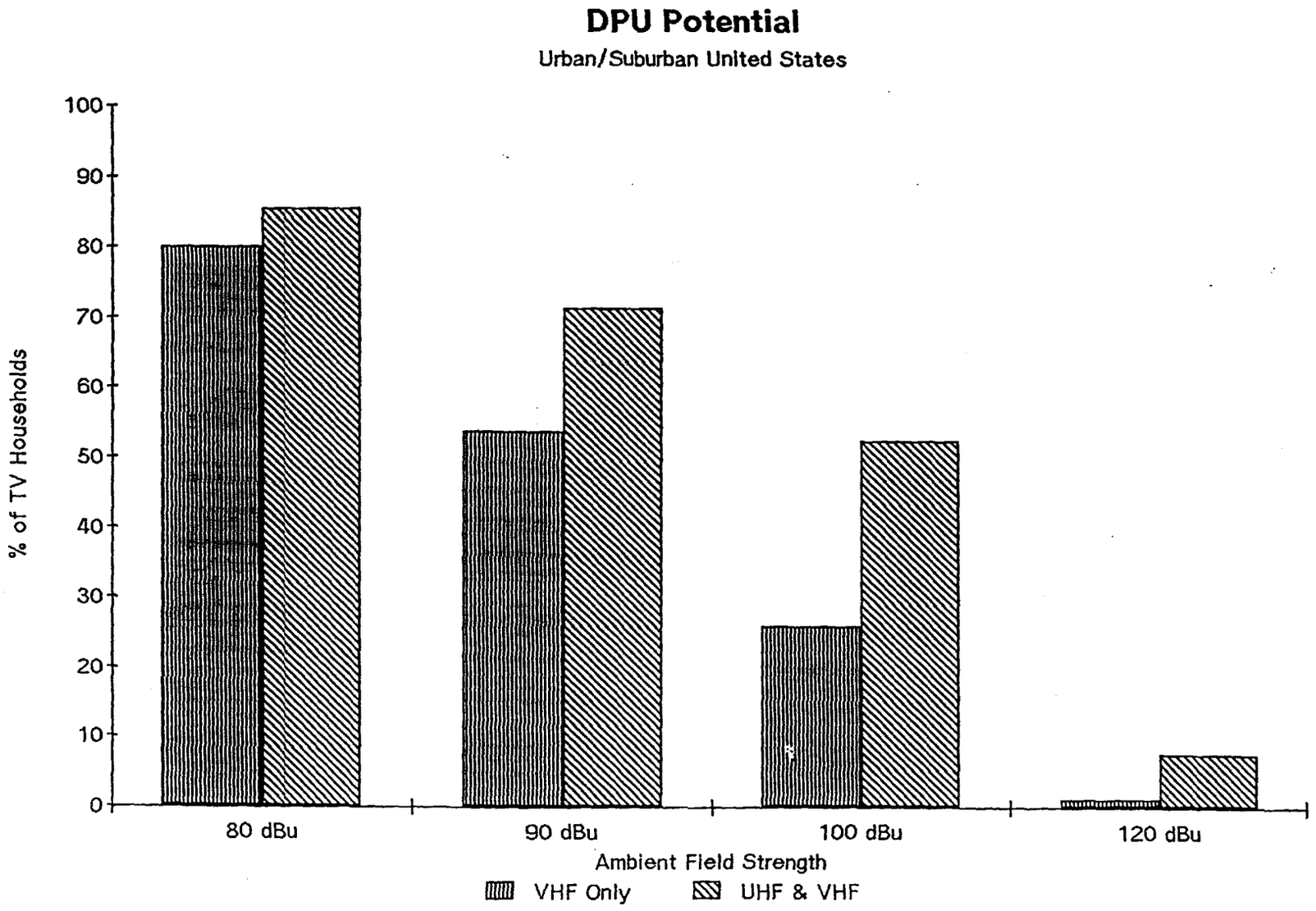
DPU Potential
Urban/Suburban United States
% of TV Households
100
90
80
70
60
50
40
30
20
10
0
80 dBu
90 dBu
100 dBu
120 dBu
Ambient Field Strength
VHF Only
UHF & VHF

3.0 Direct Pickup Interference

3.0 Direct Pickup Interference

3.1 Introduction

This Section describes the test methodology and procedures for quantifying the susceptibility of modern television receivers, video cassette recorders (VCR's), and cable converters to Direct Pickup Interference (DPU) and presents DPU test results for a sample of 35 television receivers, 8 VCR's, and 13 cable converters.

DPU is a source of co-channel or in-band interference which occurs as a result of the susceptibility of television receiving equipment to RF ambient fields having in-band components. The primary source of DPU, specific to the reception of cable television, is over-the-air, co-channel television broadcast signals. Other communications signals from fixed and mobile communications transmitters, operating within the same frequency spectrum as that used by the cable delivery system, also contribute to the DPU problem.

Ingress of DPU may occur as a result of inadequate shielding of the tuner stage of the receiver or inadequate isolation of the tuner electronics to currents flowing on the shield of the coaxial input cable or on the AC power cables. The test methodology and procedures presented here address both of these ingress mechanisms.

Section 3.2 provides a discussion of the test methodology used to objectively quantify DPU susceptibility. The DPU test procedures are presented in Section 3.3, and the DPU test results are presented in a tabular and graphic format in Section 3.4.

3.2 Test Methodology

A significant volume of data exists with regard to in-band or co-channel interference to television reception. These data, in general, were derived from subjective tests using both expert and nonexpert viewers. The data are typically presented in terms of an impairment scale, where the abscissa represents the degree of impairment and the ordinate depicts the ratio of the desired signal level to the undesired (interfering signal) level (D/U ratio) as measured at the receiver RF input port. Thus, for a certain type of co-channel interference and a given D/U ratio, it is possible to predict, for example, the resultant impairment to the median

television receiver. It is also possible to determine the D/U ratio required to produce "just perceptible" interference for a given percentage of the receiver population.

The DPU test procedures, described here, rely on objective tests to quantify DPU susceptibility in modern receivers. A commonly used measurement technique known as "signal substitution" is used to characterize co-channel DPU interference in terms of a D/U ratio referenced to the receiver RF input port. By referencing DPU interference to the receiver input port, it is possible to take advantage of the body of co-channel subjective test data which exists. Further, this reference location allows for receiver susceptibility performance to be defined at the interface with the cable delivery system.

The DPU test procedure is performed in two steps. First, a calibration signal is input at the receiver RF input port via the input coaxial cable. The calibration signal consists of a desired television signal combined with an interfering signal. The undesired (interfering) signal is an unmodulated (CW) carrier adjusted to a level 55 dB below the desired video carrier level. The 55 dB D/U ratio of the calibration signal is the nominal D/U ratio required to produce "just perceptible" co-channel interference based on subjective test data. The undesired CW signal is input at a frequency between the video and aural carriers where video modulation energy is minimal (approximately 2.55 MHz above the video carrier frequency). Figure 3.1 shows a spectral display of the calibration signal.

A measurement of the resultant undesired (interfering) signal level, within the Equipment Under Test (EUT), is made at the baseband video output port or at an intermediate frequency (IF) test point location. The measured level of the interfering signal at the test point location is the "reference interference level" within the receiver. The measurement location is called the "measurement test point location."

In the second step of the procedure, the interfering signal is removed from the input port of the receiver, and the receiver is irradiated with an ambient field at the same interfering frequency. The level of the ambient field is adjusted until the same "reference interference level" is obtained at the receiver measurement test point location. The field strength required to match the "reference interference level" at the measurement test point location is, therefore, equivalent to an interfering signal source input at the receiver input port which is 55 dB below the desired video carrier level. This is also the field strength required to produce "just perceptible" interference in the receiver, based on subjective test results; and, therefore, represents the threshold of receiver susceptibility.

In a similar manner, the radiated field may be replaced by a conducted current injected on the shield of the input coaxial cable or on the AC power cable. The

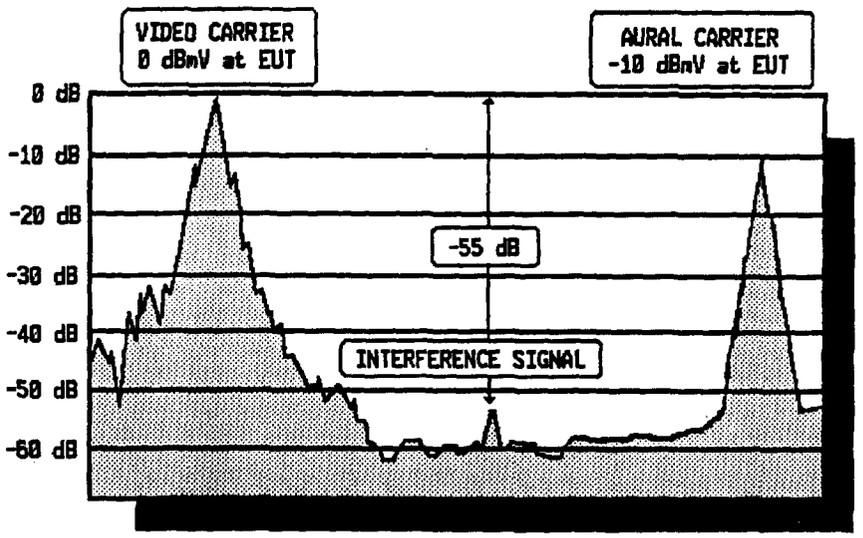

Figure 3.1 Calibration Signal

current is adjusted until the reference interference level is matched at the measurement test point location. The current required to match the reference interference level is equivalent to an interfering signal source at the receiver input port which is 55 dB below the desired video carrier level.

3.2.1 Shielding Effectiveness Figure of Merit

The DPU susceptibility data can be presented in terms of a shielding effectiveness figure of merit for the receiver. The figure of merit is the ratio of the measured field strength (or current) to the input interference signal. The DPU test procedures, contained here, will result in three figures of merit for each test sample; one for radiated susceptibility, one for conducted current susceptibility on the shield of the input cable, and one for conducted current susceptibility on the AC power cable.

In the case of radiated susceptibility, if the figure of merit, field strength, and input interfering signal are expressed logarithmically, the following equation describes the relationship between these quantities:

$$FM = FS - IS \qquad \text{(Eq. 3.1)}$$

Where:

FM = Figure of Merit (dB),
FS = Measured Field Strength (dBmV/m),
IS = Input Interfering Signal (-55 dBmV)

For example, assume that a field strength of 40 dBmV/m (100 mV/m) is required to match the reference interference level at the measurement test point location of the EUT. The shielding effectiveness figure of merit is calculated from equation 3.1 to be 95 dB (40 dBmV/m - (-55 dBmV)).

It is important to note that there is a linear relationship between field strength and interfering signal level within the receiver. For example, if the ambient field strength is increased by 3 dB, the interference level within the receiver will increase by 3 dB. This means that the shielding effectiveness figure of merit is independent of the D/U ratio selected to represent the "just perceptible" interference threshold. If the DPU testing were performed with an input interfering signal at a level of -52 dBmV instead of -55 dBmV, the resultant field strength required to produce the -52 dBmV equivalent interference signal would also increase 3 dB, and the figure of merit for the receiver would remain constant.

As a final example, assume that one wishes to determine the ambient field strength required to produce an equivalent input D/U ratio of 50 dB for a receiver having a measured figure of merit of 95 dB. Solving for field strength in equation 3.1 yields 45 dBmV (177.8 mV/m).

In the case of receiver susceptibility to conducted currents on the shield of the input coaxial cable or on the power cable, the figure of merit is given by the following equation.

$$FM = CC - IS \qquad \text{(Eq. 1.3.2)}$$

Where:

FM = Figure of Merit (dB),
CC = Conducted Current (dBuA),
IS = Input Interfering Signal (-55 dBmV)

In this case, the figure of merit is the ratio of the measured current to the input interference signal level. The examples presented above, for radiated susceptibility, are applicable to conducted susceptibility with field strength replaced by current.

3.2.2 Measurement Test Point Location

The test methodology assumes that the point at which DPU ingress occurs is prior to the first mixer in the receiver tuner stage. This is a logical assumption, since the RF stages of the receiver (prior to the first mixer) are the only stages of the system where the interfering field (or current) represents an in-band signal. After the mixer stage, the desired TV signal is translated to an intermediate frequency (IF), and the interfering ambient field (or current), from this point on, is well outside of the desired video passband. Therefore, the interfering signal will be present, within the video passband, at the IF and detected video stages of the receiver. In the case of a cable converter or VCR, the interfering signal will also be present at the frequency translated RF output.

For those receivers which have a baseband output port (all VCR's and some TV's and cable converters), this port represents a readily accessible measurement test point location to measure the interfering signal level within the receiver. In devices which do not have a baseband output port (most TV receivers and cable converters), a practical alternative must be identified.

Cable converters have an RF output port where the output channel is frequency translated with respect to the input channel. The interfering signal, appearing at the converter output port, represents the interference received by the converter and passed on to the next device. Since the interfering signal is readily measurable at this location, using a spectrum analyzer, the RF output port is selected as the measurement test point location for cable converters.

TV receivers typically have no baseband or RF output ports. In this case, a probe must be inserted in the TV receiver to bring an IF signal or baseband video signal to the exterior of the chassis. The probe must have impedance characteristics which do not adversely affect the functionality of the receiver; however, the actual receiver circuit impedance at the probe location is not critical since only relative measurements will be made at this location. Circuit schematics are generally required with each test item to identify a suitable test point location within the IF stage or detected video stage of the receiver.

As a final note on this subject, selecting a test point at a location translated in frequency from the impinged interfering field insures that the test cables and

probes used to measure the interfering signal will not pickup and/or induce additional in-band components into the receiver electronics.

3.2.3 Desired and Undesired (Interfering) Test Signals

DPU susceptibility is performed with an actual television test signal input on the desired channel. By using a television test signal, all of the electronic circuits within the EUT, including the AGC and AFC circuits, will be active and operating under normal conditions. The input level of the desired video carrier is set for the minimum level delivered by a cable system (0 dBmV). The video carrier is modulated with a 0 IRE or 10 IRE flat field modulation. The aural carrier is unmodulated and adjusted for a level 10 dB below the desired video carrier level.

The undesired (interfering signal) is an unmodulated CW carrier. Prior testing has shown that across the video passband of a test channel, the tuner shielding effectiveness figure of merit is constant. This means, for example, a 100 mV/m ambient field strength at a frequency 0.5 MHz above the desired video carrier will produce the same interfering signal magnitude at the output of the tuner as a 100 mV/m ambient field strength at a frequency 2.5 MHz above the desired video carrier frequency. Therefore, for each test channel, only a single interfering frequency is required. The frequency of the undesired (interfering) signal is selected between the video and aural carrier frequencies (2.55 MHz above the video carrier frequency) where video modulation energy is minimal and maximum dynamic range is obtained.

Based on prior subjective testing, D/U ratios on the order of 45 to 70 dB produce co-channel "just perceptible" interference in modern receivers; ambient field strengths in the range of 1 mV/m to 3 V/m will be required to produce this level of interference in the range of devices to be tested.

3.2.4 Test Channels

Four standard test channels were chosen to represent receiver DPU susceptibility performance to radiated ambient fields. Three of the channels were selected in the standard cable band between 54 and 550 MHz. One additional channel was chosen above the presently used cable spectrum in anticipation of expanding into this band. Since most receivers do not tune to cable channels above 550 MHz, a broadcast channel was selected as the final test channel. The four standard test channels are:

CHANNEL	FREQUENCY
6	82 - 88 MHz
12	204 - 210 MHz
78	546 - 552 MHz
59 (BROADCAST)	740 - 746 MHz

DPU receiver susceptibility to conducted currents flowing on the shield of the input coaxial cable and on the AC power cable will be tested at channel 6 and channel 12, only.

3.2.5 Test Facility and Test Configuration

Since relatively high field strengths are required to perform DPU receiver susceptibility testing, a shielded test chamber is required. Use of a shielded test chamber insures that the radiated fields from the DPU test facility do not interfere with other licensed communications facilities in the vicinity and that ambient external fields do not interfere with the DPU testing. It is recommended that an anechoic or semi-anechoic chamber be used. A TEM cell may also be used to perform DPU radiated susceptibility testing, provided it has UHF frequency capability, it is of sufficient size to handle large television receivers, and it has special provisions to rotate the EUT through a 360 degree arc.

The DPU tests conducted at Carl T. Jones Corporation were performed in a 12-foot x 16-foot semi-anechoic shielded enclosure. Fifty blocks of anechoic RF absorptive material were installed in the enclosure to achieve the field uniformity requirement for the test.

The DPU test facility must be capable of producing ambient, horizontally polarized field strengths up to 3 V/m at each of the test frequencies. Field uniformity at each test frequency must be less than ±4 dB over a cubic test volume, 2.5 feet on a side. Figures 3.2 and 3.3 show the equipment configurations for performing the field strength and field uniformity calibration measurements within the test chamber.

Figure 3.4 shows a typical radiated susceptibility test configuration. The EUT is placed on a non-metallic rotatable table, 0.9 meters above the ground plane of the test chamber. The table must be capable of rotating the EUT through a 360 degree arc in order to establish the orientation of maximum susceptibility. Generator #1 in Figure 3.4 is the desired TV signal generator (baseband TV signal generator and agile channel modulator). Generator #2 is the undesired (interfering) signal generator (a calibrated signal source feeding a power amplifier). A broadband biconical or log periodic antenna connected to the output of generator #2 is used to create the ambient field at the EUT.

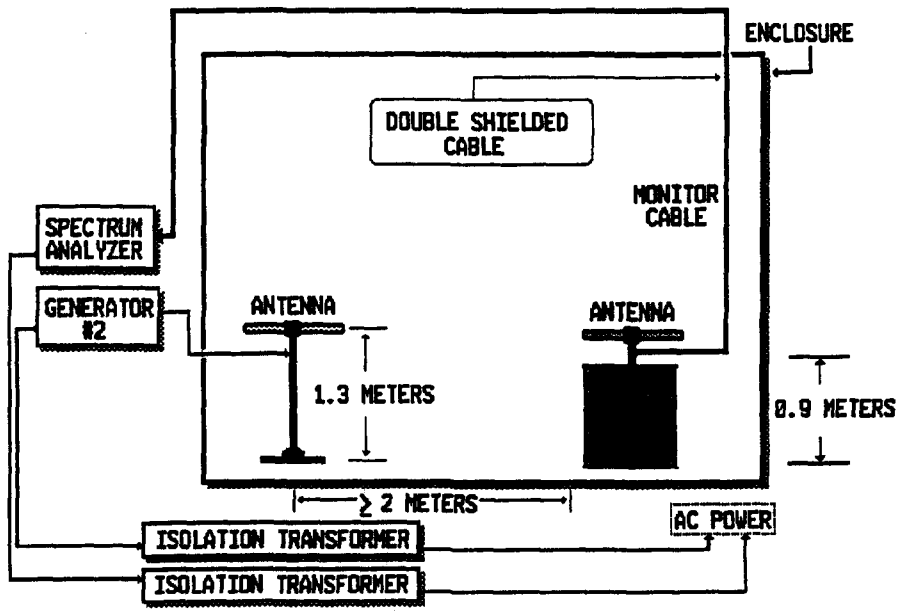

Figure 3.2 Test Chamber Field Strength Calibration Configuration

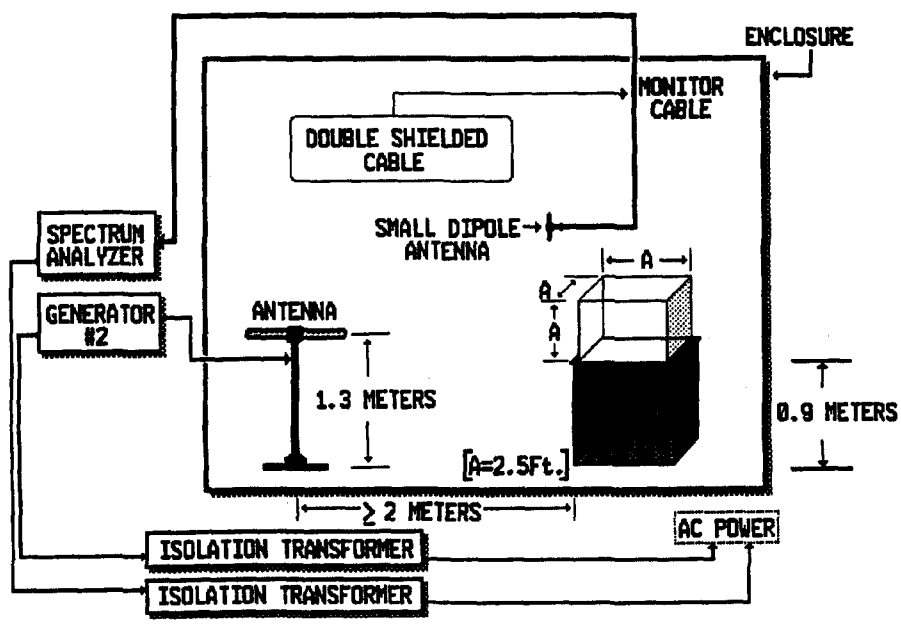

Figure 3.3 Test Chamber Field Uniformity Calibration Configuration

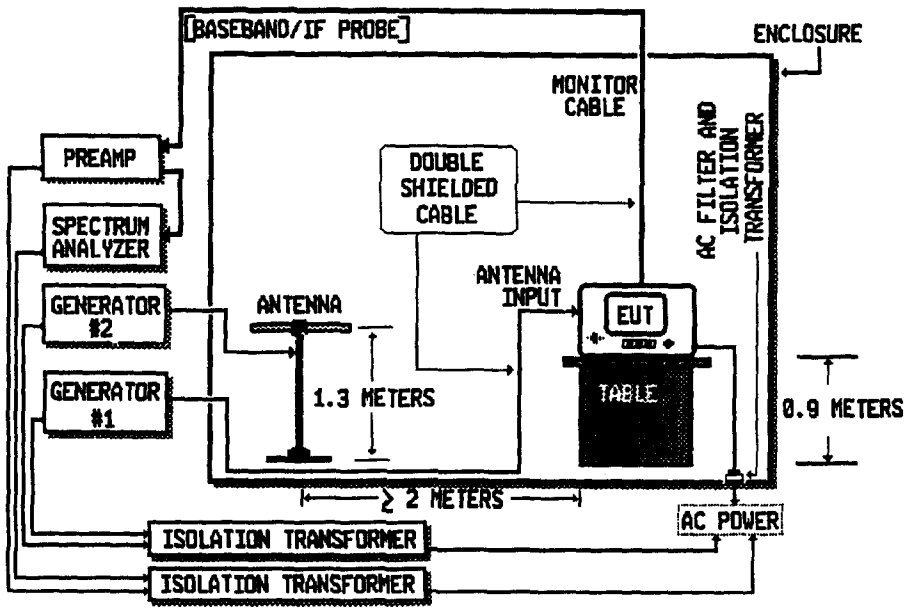

Figure 3.4 Radiated Susceptibility Test Configuration

Figure 3.5 shows the test configuration for the conducted current susceptibility test. For this test, the transmit antenna is replaced by a current injection clamp on the input coaxial cable. A current probe, also located on the input cable and immediately adjacent to the EUT chassis, is used to measure the current flowing on the shield at the input port. This test is repeated with the injection clamp and current probe placed on the AC power cable.

3.3 DPU Test Procedures

This Section provides detailed test procedures for radiated and conducted current DPU susceptibility testing.

3.3.1 General Test Conditions

For all calibration and test procedures, the EUT and test equipment will be properly impedance matched (the one exception is the high impedance IF probe).

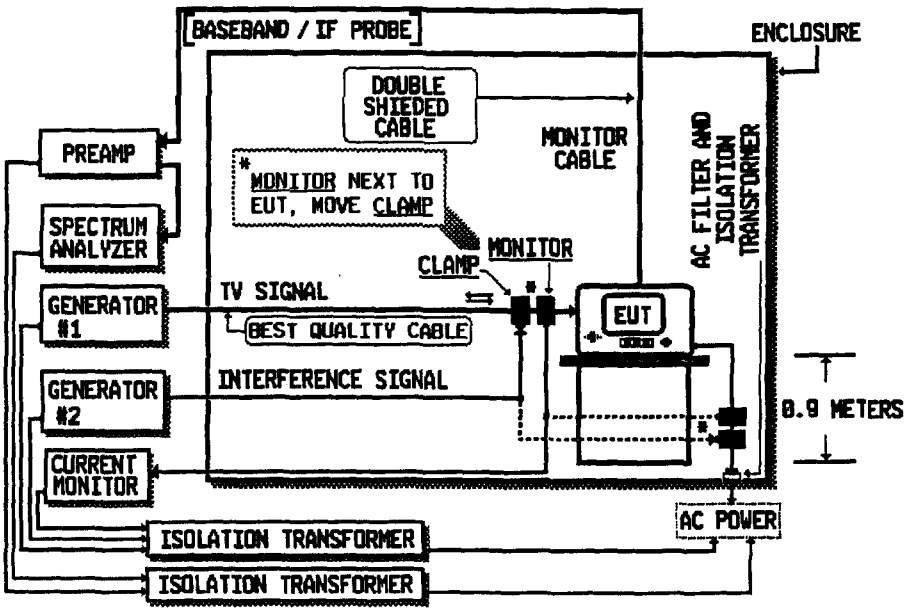

Figure 3.5 Conducted Current Susceptibility Test Configuration

All cable losses, attenuator losses, amplifier gains, and combiner losses will be measured and recorded for each test frequency. When appropriate, additional amplification and/or filtering may be used to improve measurement system performance. All calibrated signal inputs to the EUT, transmitting antenna, and current injection clamp will be referenced to a calibrated signal source output setting and/or generator output attenuator setting. Calibrated signal generators will be verified for accuracy using a NIST traceable calibrated power meter.

The measurement of the level of the desired video input carrier will be performed with a spectrum analyzer processing bandwidth of 300 kHz or greater and no video filtering. All other relative signal levels will be referenced to the peak sync tip of the desired modulated video carrier. Narrower processing bandwidths and video filtering or averaging may be used when measuring unmodulated (CW) interfering signals.

3.3.2 DPU Test Chamber Calibration

At each test frequency, the DPU test chamber is calibrated to verify field uniformity and to establish the interference signal generator output level required to produce a radiated field of 3 V/m at the EUT location. These tests are performed using the same transmitting antenna, and configuration, as used for the actual radiated susceptibility test. The transmit and receive antennas used in the calibration process are broadband biconical dipole or log periodic antennas. Tests are performed using horizontal polarization only. A step-by-step procedure for performing the DPU test chamber calibration follows.

STEP #1 Configure the test chamber and test equipment as shown in Figure 3.2. Center the horizontally polarized broadband receive antenna within the test volume to be occupied by the EUT. The test chamber calibration frequencies (DPU interfering frequencies) are:

TEST CHANNEL	CALIBRATION FREQUENCY
6	85.8 MHz
12	207.8 MHz
78	549.8 MHz
59 (BROADCAST)	743.8 MHz

STEP #2 Set signal generator #2 to the first calibration frequency and center the spectrum analyzer display for that frequency. Adjust the output level of generator #2 until a signal is observed on the spectrum analyzer display. Rotate the receive antenna to maximize the received power level. Continue to adjust the output level of generator #2 until a field strength of 3 V/m is obtained on the receive antenna (taking into account the cable loss and antenna factor for the selected calibration frequency). Record the generator output level.

STEP #3 Replace the broadband dipole receive antenna with a small, horizontally polarized, dipole (or equivalent) receive antenna as shown in Figure 3.3. With the small dipole antenna located at position #1 (Figure 3.6) and generator #2 set for 3 V/m (STEP #2 above), measure the relative field strength on the spectrum analyzer. Repeat this measurement for each of the remaining antenna positions shown in Figure 3.6. Record the field uniformity test results onto a data sheet.

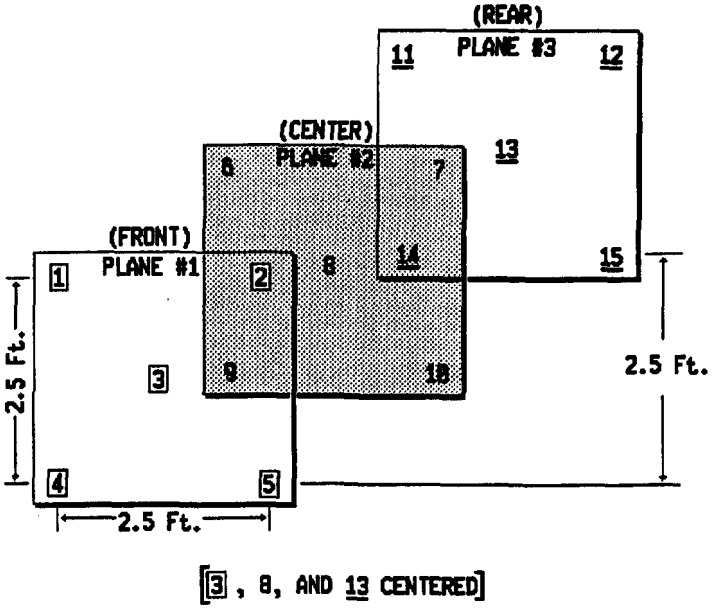

Figure 3.6 Field Uniformity Test Points

STEP #4 Verify that the relative volumetric field uniformity measurements comply with the ±4 dB field uniformity requirement.

STEP #5 Repeat STEPS 2 through 4 for the remaining three test frequencies.

3.3.3 Radiated and Conducted Current Susceptibility Calibration Procedure

As was discussed in Section 3.2, the first step in the DPU susceptibility measurement procedure is to input a calibrated reference signal, via the coaxial input cable, consisting of a desired television signal combined with an interfering signal. The undesired (interfering) signal is an unmodulated (CW) carrier adjusted to a level 55 dB below the desired video carrier level. The "reference interference level" is then measured at the measurement test point location.

In the case of a TV receiver monitored at an IF test point, the "reference interference level" will be measured using a high impedance probe. Figure 3.7 shows a typical IF test probe. Since the local test point ground may be different from earth ground, it is important that an isolation transformer be used to power the EUT. A step-by-step procedure to perform the DPU radiated and conducted current susceptibility calibration follows.

STEP #1 Configure the TV signal generator (generator #1) and the interfering CW signal generator (generator #2) as shown in Figure 3.8. Configure the EUT and test equipment as shown in Figure 3.9.

STEP #2 Allow a 15 minute warm-up time for test equipment and EUT and verify proper operation.

STEP #3 Set the channel modulator to the first test channel. Modulate the desired video carrier with a 0 IRE or 10 IRE flat field modulation, and set the level of the video carrier to 0 dBmV at the input to the EUT. Adjust the level of the unmodulated aural carrier to -10 dBmV. The video and aural carrier frequencies for the four test channels are:

TEST CHANNEL	VIDEO CARRIER	AURAL CARRIER
6	83.25 MHz	87.75 MHz
12	205.25 MHz	209.75 MHz
78	547.25 MHz	551.75 MHz
59 (BROADCAST)	741.25 MHz	745.75 MHz

STEP #4 Adjust the interfering signal generator (#2) for the desired interfering frequency for the first test channel (see table below for interfering frequencies). Adjust the output level of the generator to produce an interfering signal at the input to the EUT which is 55 dB below the desired video carrier level. Record the generator output setting.

TEST CHANNEL	INTERFERING FREQUENCY
6	85.8 MHz
12	207.8 MHz
78	549.8 MHz
59 (BROADCAST)	743.8 MHz

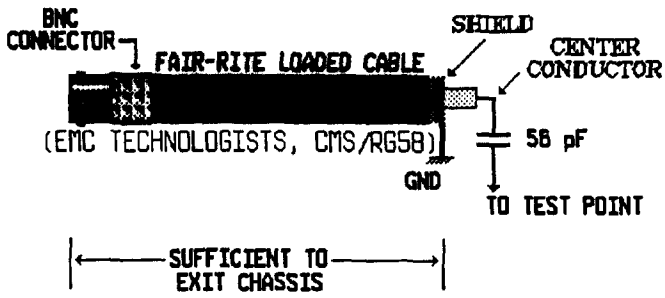

Figure 3.7 IF Monitor Test Probe (Equivalent)

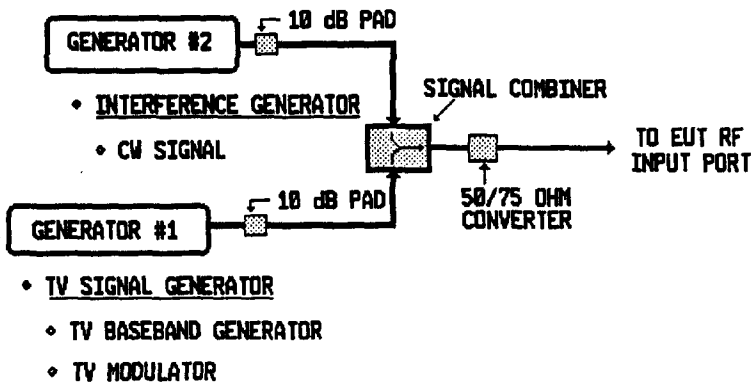

Figure 3.8 Radiated Susceptibility Calibration Generator Configuration

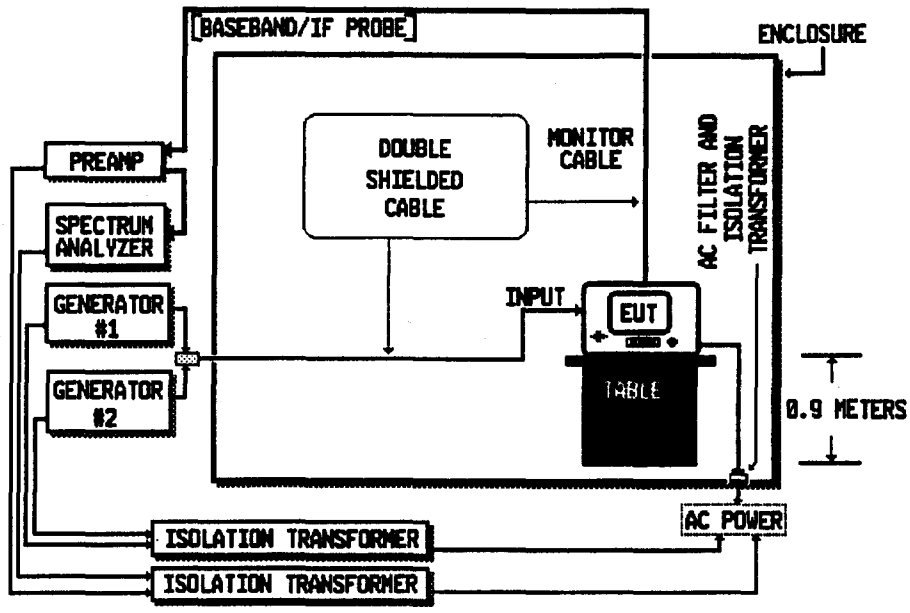

Figure 3.9 Radiated Susceptibility Equipment Calibration Configuration

STEP #5 Attach the monitor cable to the measurement test point location. Adjust the spectrum analyzer display to view the reference interference signal. If a baseband video measurement point location is being monitored, the reference interference signal will appear at a frequency of 2.55 MHz in the baseband spectral display. If an IF test point is being monitored, the reference interference signal will appear at a frequency of 43.2 MHz in the IF spectral display. If an RF output port is being monitored, the reference interference signal will appear 2.55 MHz above the output channel visual carrier frequency.

STEP #6 Record on a data sheet the reference interference signal level measured at the measurement test point location. This is the reference level which will be matched in the radiated and conducted susceptibility tests.

STEP #7 Repeat STEPS 3 through 6 for the remaining three test channels.

3.3.4 Radiated Susceptibility Test Procedure

For the radiated susceptibility test procedure, the interfering signal is removed from the EUT input and connected to the transmit antenna. The field strength is adjusted until the interference signal, as measured at the measurement test point location, is equal to the "reference interference level."

In order to minimize radiated field pickup and resulting current flow on the input coaxial cable shield, the monitor cable shield, and the power cable, these cables should be vertically oriented (cross polarized to the radiated field) as much as practical in the test chamber. Conduit may also be used between the wall of the chamber and the base of the rotatable table to encase the input and monitor cables. A step-by-step procedure for performing the DPU radiated susceptibility test is presented below.

STEP #1 Reconfigure the test equipment and EUT as shown in Figure 3.4, connecting the interference generator (#2) output to the RF amplifier and transmit antenna. Configure the test generators as shown in Figure 3.10.

STEP #2 Adjust the interference signal generator (generator #2) output level so that the ambient field strength is sufficient to produce a detectable DPU interfering signal at the EUT's measurement test point location (do not exceed a field strength of 3 V/m). Rotate the EUT through 360 degrees while monitoring the interfering signal level on the spectrum analyzer. Stop at the EUT orientation which produces the maximum interference signal and record this orientation. This is the orientation of maximum radiated susceptibility of the EUT.

STEP #3 Adjust the interfering signal field strength (generator #2) to obtain (match) the "reference interference level" recorded in STEP #6 of the Calibration Procedure. Record the output level of the interference signal generator.

[**Note:** Should a field strength greater than 3 V/m be required to match the reference interference level, record the interfering signal amplitude at the EUT's monitor point for a field strength of 3 V/m.]

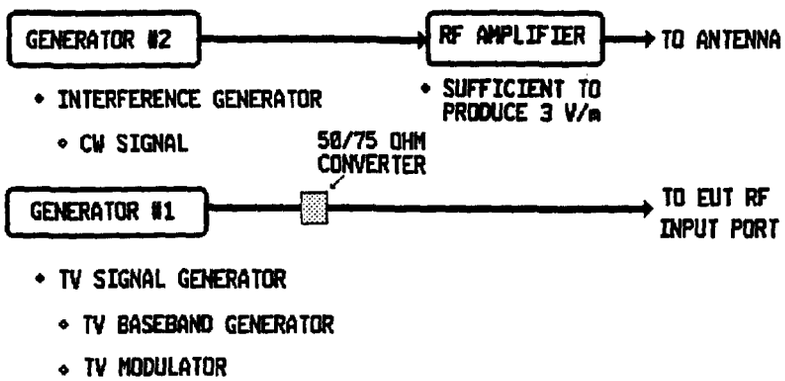

Figure 3.10 Radiated Susceptibility Test Generator Configuration

STEP #4 Repeat STEP #3, performing measurements at 45 degree increments of rotation referenced to the orientation of maximum susceptibility (seven additional measurements).

STEP #5 Repeat STEPS 2 through 4 for each of the remaining three test channels.

STEP #6 Calculate the shielding effectiveness figure of merit by subtracting the generator output level recorded in STEP #3 from the generator output level recorded in STEP #2 of the DPU Test Chamber Calibration Procedure. Subtract the difference from 69.5 dBmV/m (3 V/m). This yields the field strength required to produce an equivalent 55 dB D/U at the input of the EUT. The figure of merit can be calculated by adding 55 dB to this field strength (see Eq. 3.1).

Example:

A.	Interfering Generator Output Level (Susceptibility Test Procedure, STEP #3)	= 14.2 dBmV
B.	Interfering Generator Output Level (3 V/m) (Test Chamber Calibration, STEP #2)	= 40.2 dBmV
C.	B. - A. = 40.2 dBmV - 14.2 dBmV	= 26.0 dB
D.	FS = 69.5 dBmV/m - 26 dB	= 43.5 dBmV/m
E.	Calibration Interference Level (IS)	= -55.0 dBmV
F.	FM = 43.5 dBmV/m -(-55 dBmV)	= 98.5 dB

In this example, the shielding effectiveness figure of merit for the orientation of maximum susceptibility was determined to be 98.5 dB. It is also apparent that an impinged field strength of 43.5 dBmV/m (149.6 mV/m) produces an equivalent D/U ratio at the EUT input of 55 dB (nominal value for "just perceptible" interference).

3.3.5 Conducted Current Susceptibility Test Procedure

In the conducted current susceptibility test procedure, an RF current at the DPU interfering frequency is injected onto the shield of the input coaxial cable and onto the AC power cable using a toroidal injection clamp. A similar toroidal monitor is used to measure the current flowing on the cable at the input to the EUT. The figure of merit is the ratio of the measured current required to match the reference interference signal to the equivalent calibration interference signal level at the input of the EUT. It is important that a good quality, double shielded test cable be used for the input coaxial cable.

Conducted current susceptibility tests are performed on two of the four standard test channels, cable channels 6 and 12. The interference test signal frequencies will be the same as those of the radiated susceptibility test for the two selected test channels.

To prevent over-current injection, the tests are performed at injected current levels below those which would be present if the cables were subjected to an approximate 3 V/m field strength. MIL-STD-461D provides some indication of the current which might flow on a cable when subjected to such a field strength. Based on this standard, an approximate current limit for a 3 V/m field strength is given by the equation:

$$LIMIT_{(dB\mu A)} = 85.6 - 10 \, Log_{10} \, F(MHz) \qquad \text{(Eq. 3.3)}$$

The maximum current for the two DPU interfering frequencies is:

TEST CHANNEL	INTERFERING FREQUENCY	CURRENT
6	85.8 MHZ	66.2 dBuA
12	207.8 MHZ	62.4 dBuA

A step by step procedure for measuring the conducted current susceptibility is presented below.

STEP #1 Configure the test system and signal generators as shown in Figures 3.5 and 3.11. Allow 15 minutes for test equipment and EUT to warm up.

STEP #2 Place the MONITOR probe on the input coaxial cable, as close to the EUT input port as possible. Place the CLAMP probe next to the MONITOR probe.

STEP #3 Adjust the television signal generator (generator #1) for the first test channel and a desired video carrier level of 0 dBmV at the input port of the EUT. While monitoring the output of the MONITOR probe on a spectrum analyzer or tuned RF voltmeter, adjust the interfering generator (generator #2) output until a measurable signal is present. Do not exceed the maximum level shown in the table above.

STEP #4 While continuing to monitor the output of the MONITOR probe, slide the CLAMP probe along the cable under test until the current, as indicated by the monitor probe, is maximized. [**Note:** This STEP is performed to minimize the standing wave that forms along the length of the cable.] Affix the CLAMP probe to the cable at the point of maximum current.

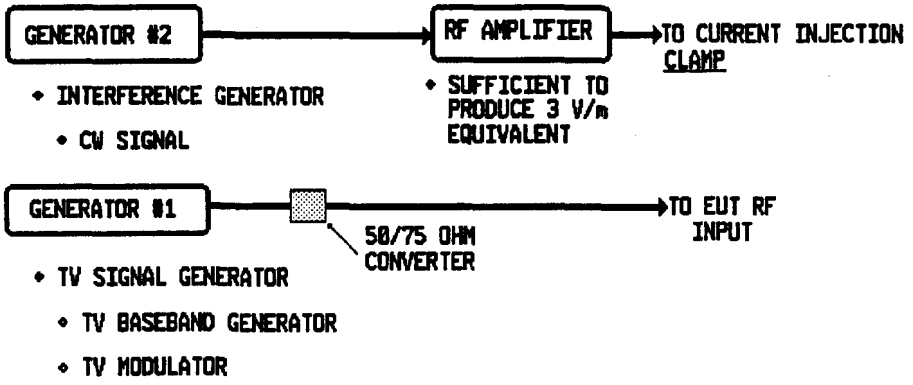

Figure 3.11 Conducted Current Susceptibility Test Generator Configuration

STEP #5 While monitoring the interfering signal at the EUT's baseband/IF measurement test point location, adjust generator #2 until the interference signal matches the "reference interference level" obtained in STEP #6 of the Susceptibility Calibration Test Procedure. Record the measured current from the MONITOR probe for this condition in units of dBuA. This is the current required to produce an equivalent 55 dB D/U at the input to the EUT.

[**Note:** To convert the voltage output of the MONITOR probe to a current, add the MONITOR probe transfer impedance dB(s) to the measured output voltage (dBuV)].

$$dB\mu A_{(\text{Conductor Current})} = dB\mu V_{(\text{Analyzer})} - dB(s) \qquad \text{(Eq. 3.4)}$$

STEP #6 Calculate the figure of merit by adding 55 dB to the measured current in STEP #5.

STEP #7 Repeat STEPS 3 through 6 for the second test channel.

STEP #8 Repeat STEPS 3 through 7 with the current CLAMP and MONITOR probe installed on the EUT AC power cable.

3.4 Receiver DPU Susceptibility Test Results

This Section presents the results of the DPU radiated and conducted current susceptibility tests for a test sample population of 35 television receivers, 8 VCR's, and 13 cable converters. The test results are presented in both tabular and graphic formats for ease of comparative analysis. The tabular results are presented in terms of the shielding effectiveness figure of merit for each test sample. Graphical results are presented in terms of the ambient field strength or current required to produce an equivalent 55 dB D/U ratio at the receiver input port. The 55 dB D/U ratio is considered the nominal value required to produce "just perceptible" co-channel interference in the received picture and is, therefore, the threshold of receiver susceptibility to co-channel DPU interference.

3.4.1 Radiated Susceptibility Test Results

Radiated susceptibility tests were performed at eight different receiver orientations with respect to the DPU source. Each test sample was first oriented for maximum susceptibility and the figure of merit measured in accordance with the procedures contained in Section 3.3.4. Seven additional measurements were then performed at 45 degree increments referenced to the orientation of maximum susceptibility.

Radiated susceptibility test results for each of the three receiver types (TV's, VCR's, and cable converters) are presented in the following Sections.

3.4.1.1 Television Receiver Radiated Susceptibility Test Results

Contained in Tables 3.1 through 3.4 are tabulations of the shielding effectiveness figures of merit for the 35 television receivers at each of the four test channels. For each test sample and at each test channel, a figure of merit is presented for the orientation of "maximum susceptibility" (shaded column on the left-hand side of the tabulation) followed by the figures of merit for each of the seven additional incremental orientations. In the shaded column on the right-hand side of the tabulation is the average of the eight figures of merit, referred to as the "average susceptibility" figure of merit.

The median performing receiver is also identified on each tabulation. ***By definition, half of the receiver test sample population performs better than the median receiver, and half performs worse than the median receiver.*** Where there is an even number of test samples, the median receiver performance is interpolated between the performance of two receivers. Note that the median

TABLE 3.1
DPU SHIELDING EFFECTIVENESS FIGURE OF MERIT
RADIATED SUSCEPTIBILITY

TELEVISION RECEIVERS

CABLE CHANNEL 6 (82–88 MHz)

SAMPLE NO.	MAXIMUM SUSCEPT-IBILITY	ORIENTATION (degrees) 45.0	90.0	135.0	180.0	225.0	270.0	315.0	AVERAGE SUSCEPT-IBILITY
021	52.5	53.5	53.5	53.0	54.5	55.0	56.5	55.5	54.4
034	53.5	54.5	75.0	61.0	62.5	55.0	58.0	62.0	59.3
019	55.0	56.0	56.5	60.5	64.5	56.0	57.0	60.5	58.9
018	56.0	60.0	63.5	64.5	62.0	58.5	59.0	60.0	60.9
027	56.5	57.0	58.5	62.5	67.0	58.0	61.5	62.5	61.2
028	57.0	59.0	62.5	65.5	70.0	62.5	59.5	60.0	63.0
016	61.5	64.0	68.0	73.0	76.5	62.0	64.0	73.5	69.6
003	62.0	66.5	69.0	71.0	65.0	65.5	69.0	65.0	67.1
029	62.0	65.0	67.0	69.0	70.0	63.0	65.0	66.0	66.3
009	63.0	64.0	64.5	64.0	65.5	65.5	64.0	65.0	64.5
014	63.0	66.0	68.0	69.0	70.0	63.5	64.5	65.5	66.6
005	63.0	65.5	65.0	71.0	69.5	63.0	66.0	66.0	66.6
033	64.5	67.5	69.0	71.5	67.5	66.0	68.0	68.5	68.1
007	65.0	66.0	67.0	67.5	78.0	66.5	69.0	80.5	72.0
011	65.5	67.0	69.0	71.5	71.0	67.0	69.5	70.5	69.1
013	66.5	67.0	68.0	68.5	69.0	67.5	67.5	68.0	67.8
035	71.0	71.5	73.5	75.0	77.5	72.0	74.0	76.5	74.2
010	72.0 –MEDIAN	72.5	76.0	79.0	81.5	74.5	79.0	83.0	78.1
032	72.9	73.9	82.4	85.4	83.4	73.4	77.4	80.4	79.9
002	73.9	75.9	80.9	81.9	78.4	74.9	75.9	76.9	77.8
015	74.0	76.0	76.5	81.5	81.5	76.5	76.0	76.5	77.8 –MEDIAN
022	75.0	75.5	78.0	81.5	84.5	76.0	79.0	83.0	79.8
001	76.5	80.0	81.0	81.0	81.0	83.0	86.0	82.0	81.7
008	77.0	77.5	79.5	90.5	83.0	77.5	79.5	80.5	81.9
020	77.5	79.0	80.5	82.0	85.0	79.0	85.0	85.5	82.2
006	79.0	80.5	81.5	85.5	85.5	79.5	80.5	86.0	82.7
025	79.0	80.0	81.5	84.5	83.0	82.5	82.5	82.0	82.1
017	79.5	83.0	86.0	88.0	85.0	80.5	80.5	82.0	83.6
004	81.0	84.5	85.5	86.5	86.0	82.0	83.0	84.0	84.3
030	81.5	82.0	80.5	82.5	83.0	81.5	81.0	82.5	81.9
012	82.0	82.5	83.0	87.0	90.5	82.5	85.0	88.0	85.6
024	83.0	85.0	85.5	85.5	85.0	84.5	85.0	85.5	85.0
023	84.0	89.5	87.5	85.5	89.5	85.0	87.0	89.5	87.5
026	87.0	95.0	96.0	96.5	90.5	95.0	109.0	93.5	97.9
031	87.0	89.5	90.0	89.0	89.0	89.0	88.5	88.0	88.8

TABLE 3.2
DPU SHIELDING EFFECTIVENESS FIGURE OF MERIT
RADIATED SUSCEPTIBILITY

TELEVISION RECEIVERS

CABLE CHANNEL 12 (204–210 MHz)

SAMPLE NO.	MAXIMUM SUSCEPT-IBILITY	ORIENTATION (degrees) 45.0	90.0	135.0	180.0	225.0	270.0	315.0	AVERAGE SUSCEPT-IBILITY
027	46.7	55.2	58.2	58.7	58.7	52.2	65.2	54.2	57.7
028	52.7	58.7	61.7	58.7	63.2	55.7	68.7	63.7	61.7
007	62.2	66.2	72.2	77.7	72.7	68.2	72.7	69.7	71.3
021	62.2	64.2	67.7	63.2	63.7	65.7	77.2	94.7	79.1
034	66.7	75.7	74.7	80.2	83.7	69.2	80.7	87.2	79.8
016	68.7	72.7	79.7	76.7	75.2	71.2	79.7	84.7	77.5
001	72.2	78.7	77.7	90.2	80.7	76.2	76.2	82.7	81.1
011	74.2	79.2	81.2	77.2	81.7	75.7	83.2	89.2	81.5
013	74.7	77.2	79.7	83.2	86.2	79.2	87.7	89.2	80.5
018	75.2	78.7	77.7	75.7	81.7	77.2	77.2	84.7	79.1
032	76.1	78.6	83.1	81.6	87.1	76.6	79.6	83.6	81.6
002	80.6	85.6	86.6	88.6	106.6	81.1	85.1	87.6	92.7
025	81.2	85.7	86.2	97.2	86.7	85.2	85.7	86.7	88.2
019	81.2	83.2	86.7	83.7	87.7	83.7	86.7	91.2	86.1
017	81.7	86.7	84.7	85.7	89.2	83.7	85.7	89.2	86.2
029	82.2	88.7	87.2	89.2	86.2	85.7	83.2	87.7	86.5
009	82.7	85.7	90.2	88.7	97.2	84.7	94.7	91.7	90.8
033	83.7 –MEDIAN	86.2	86.2	86.2	85.7	85.7	89.7	86.2	86.4
020	83.7	86.2	86.7	90.2	91.7	89.7	90.2	86.2	88.5
022	83.7	88.2	101.7	97.2	98.7	85.7	91.7	97.2	95.1
008	84.7	90.2	90.2	83.7	90.2	90.2	93.2	109.2	95.9
005	84.7	90.2	95.7	89.2	94.2	87.2	93.7	91.2	91.5
014	85.2	89.2	91.7	91.2	100.2	86.2	91.7	94.7	92.5
031	86.2	88.7	90.2	95.7	100.2	88.7	100.2	95.7	94.7
010	87.2	90.2	89.2	97.7	89.2	88.2	97.7	93.7	92.6
035	87.2	88.7	93.2	100.2	98.2	94.7	97.7	93.7	95.2
003	87.7	89.2	90.7	95.7	101.7	87.7	89.7	109.7	98.0
023	88.2	92.2	93.2	97.7	100.2	92.7	99.2	98.7	96.2
026	89.2	93.2	93.7	92.7	98.2	92.2	91.2	98.7	94.2
004	89.7	92.7	96.2	97.2	96.2	91.7	98.7	97.2	95.5
030	89.7	93.2	101.7	94.7	90.2	91.7	93.2	94.2	94.4
024	89.7	93.7	105.2	99.2	99.2	91.7	99.7	102.7	99.1
015	91.2	93.7	94.2	103.2	101.2	92.7	103.2	98.7	98.5
012	91.2	97.2	103.7	106.7	106.7	94.7	101.2	100.7	101.7
006	92.7	95.2	97.2	101.2	99.7	93.7	94.2	93.2	96.5

TABLE 3.3
DPU SHIELDING EFFECTIVENESS FIGURE OF MERIT
RADIATED SUSCEPTIBILITY

TELEVISION RECEIVERS

CABLE CHANNEL 78 (546–552 MHz)

SAMPLE NO.	MAXIMUM SUSCEPT-IBILITY	ORIENTATION (degrees) 45.0	90.0	135.0	180.0	225.0	270.0	315.0	AVERAGE SUSCEPT-IBILITY
027	58.1	55.1	55.6	57.1	58.6	61.6	53.6	56.1	56.7
007	54.1	61.1	61.1	56.1	62.6	60.6	64.6	66.1	61.6
028	55.6	63.1	64.6	65.1	64.1	59.1	65.6	66.1	63.6
016	64.6	70.1	68.6	87.1	76.6	73.6	71.6	82.1	77.2
008	65.1	71.6	70.6	76.6	79.1	65.6	77.6	81.6	75.5
021	66.6	73.6	70.1	75.6	73.6	68.1	70.1	74.1	72.0
013	69.6	71.1	72.1	78.6	78.1	83.1	74.6	85.6	76.4
011	72.6	86.1	82.1	88.1	86.1	78.1	92.1	80.6	85.0
010	76.1	81.1	88.6	90.1	82.6	83.1	86.6	78.6	84.6
032	76.6	81.1	84.6	92.6	87.1	82.1	85.1	82.6	85.3
017	81.6	89.6	82.6	88.6	103.6	99.1	89.1	87.1	93.5
020	82.1	91.6	86.6	84.6	95.1	83.1	98.6	95.1	91.6
022	82.1	92.1	89.1	91.1	104.1	85.6	86.6	96.1	94.6
035	82.6	83.6	84.1	88.1	91.6	86.1	99.6	86.6	89.8
019	83.1	100.1	84.6	89.1	85.1	84.6	86.6	86.1	88.5
029	83.1	91.1	91.1	88.6	92.1	88.6	92.1	97.6	91.4
014	84.1*	89.6	94.1	94.6	92.6	89.6	86.1	96.1	91.7
002	84.1*	88.6	97.6	94.1	92.6	95.6	91.1	92.6	92.8*
025	84.6	86.6	89.1	86.6	96.6	91.6	107.1	88.1	95.0
024	85.6	91.1	104.1	93.6	103.1	92.6	87.1	91.1	96.1
005	85.6	92.6	87.6	91.6	104.1	89.1	89.6	93.6	93.8
034	86.6	94.6	89.1	88.1	90.1	87.1	91.6	95.6	91.0
018	87.1	90.1	90.1	90.6	90.1	97.1	100.6	89.6	93.1*
015	87.1	91.6	99.1	95.1	98.1	95.1	96.1	104.1	97.1
023	87.6	95.1	93.1	94.6	94.1	95.1	89.1	105.6	96.1
009	89.6	110.1	99.6	90.1	89.6	90.6	96.6	96.1	98.5
033	90.6	107.1	96.1	113.1	104.6	93.6	102.1	109.1	104.9
026	90.6	98.6	91.6	97.6	99.1	93.6	100.1	98.6	96.9
006	91.1	98.6	97.1	103.1	100.1	94.6	101.1	101.6	99.2
012	91.6	96.6	99.1	104.1	110.1	96.1	107.1	96.1	102.2
031	92.6	97.6	106.6	98.1	99.6	98.1	98.1	108.6	101.4
001	94.1	105.1	98.1	97.6	103.6	96.6	104.1	111.1	103.0
030	95.6	99.1	106.6	103.6	110.6	101.6	97.1	105.6	103.8
003	96.1	99.6	107.1	98.6	99.6	109.1	104.1	103.1	103.2

NOTE: EUT 004 is not included in the sample population because it did not tune to Channel 78.
Because there are an even number of samples in this test, no single median sample is indicated above.
An interpolated figure of merit pertaining to the average of the two median samples (*) is represented in the graphical analysis of Section 3.4.1.4.

TABLE 3.4
DPU SHIELDING EFFECTIVENESS FIGURE OF MERIT
RADIATED SUSCEPTIBILITY

TELEVISION RECEIVERS

BROADCAST CHANNEL 59 (740–746 MHz)

SAMPLE NO.	MAXIMUM SUSCEPT-IBILITY	ORIENTATION (degrees) 45.0	90.0	135.0	180.0	225.0	270.0	315.0	AVERAGE SUSCEPT-IBILITY
007	88.5	77.5	64.0	58.5	60.0	64.5	64.5	64.5	68.8
027	80.5	68.0	74.0	63.5	71.5	67.5	67.5	71.5	69.0
021	81.0	83.0	70.0	74.0	64.5	71.0	61.5	73.5	72.8
008	83.0	72.5	67.5	87.0	70.5	71.5	83.5	73.0	77.1
028	84.0	70.0	65.0	66.0	70.0	87.5	64.0	65.5	73.8
011	87.5	87.0	89.0	74.0	76.5	70.0	87.5	80.0	82.1
016	70.5	74.0	78.5	71.5	75.0	77.0	74.5	75.5	74.9
013	72.0	76.5	81.5	83.0	81.5	78.5	78.5	82.0	79.8
032	72.5	81.3	74.3	77.8	84.8	73.8	77.8	82.3	79.1
034	77.0	82.0	78.5	82.0	81.5	81.0	80.5	79.0	80.4
019	75.5	82.5	86.0	87.5	97.5	89.0	86.5	89.5	88.6
022	78.5	85.0	99.0	90.5	86.5	83.5	81.5	82.5	88.4
020	78.5	84.5	86.0	97.0	101.0	85.5	85.0	84.0	90.8
025	81.0	83.0	93.0	91.0	118.0	87.0	87.0	99.0	102.3
035	83.0	83.0	83.5	87.5	91.0	85.5	99.0	86.0	89.2
017	83.5	99.0	87.0	91.5	102.5	94.0	86.0	106.0	97.0
010	85.5 –MEDIAN	106.0	93.5	101.0	96.0	96.0	87.0	90.0	95.8
002	84.8	91.3	90.3	104.8	100.8	85.8	84.3	106.3	97.7
001	86.0	88.0	92.0	93.0	89.5	94.5	99.0	88.5	92.3
012	87.0	93.0	97.0	95.0	98.0	101.0	102.0	102.0	98.1
023	87.0	104.0	97.5	96.0	97.0	97.0	97.0	110.0	100.5
033	89.0	124.0	106.5	111.5	121.5	109.0	98.5	115.5	114.6
029	89.0	100.0	97.0	98.0	113.0	92.0	93.0	99.5	101.1
024	89.0	98.5	103.0	105.0	101.5	99.0	94.0	100.5	100.0
026	89.0	91.5	97.5	106.0	95.0	97.5	93.5	94.0	97.1 –MEDIAN
009	90.0	109.0	101.5	104.0	101.0	98.0	101.0	108.5	103.3
031	90.0	98.5	100.5	102.5	103.5	98.0	92.5	99.0	99.1
018	90.5	100.0	114.5	112.0	99.0	94.5	99.0	95.5	104.6
015	91.0	94.0	102.0	98.5	97.0	102.0	96.0	102.0	98.6
005	91.5	93.5	98.0	96.5	100.0	92.5	97.0	105.0	97.9
030	92.0	98.5	99.5	99.5	100.5	103.0	103.5	102.0	100.4
006	92.5	101.5	98.5	106.0	98.0	98.0	112.5	99.5	103.0
014	92.5	96.0	103.0	100.0	104.5	104.0	94.0	96.5	99.9
003	95.0	97.5	104.0	103.0	104.5	108.5	105.5	108.5	104.4

performing receiver for the orientation of "maximum susceptibility" may be different than the median performing receiver in the "average susceptibility" column.

The receiver data is tabulated in order of performance, worst to best, with respect to the maximum susceptibility orientation. ***The worst performing receiver is defined as the receiver which is most susceptible to DPU interference and, therefore, exhibits the lowest figure of merit.*** The performance order may be significantly different for the "average susceptibility" figure of merit.

A review of the best and worst performing receivers for each test channel demonstrates the tremendous range in DPU susceptibility performance in modern television receivers. The difference in the figures of merit between the best and worst performing receivers, averaged over the four test channels, is 41.7 dB. This means that a field strength 122 times greater is required to achieve "just perceptible" interference in the best performing receiver compared to the worst performing receiver.

As was described in the example of Section 3.2.1, it is possible to calculate the ambient field strength required to produce "just perceptible" interference (D/U ratio of 55 dB) when the figure of merit is known. This is accomplished by simply subtracting 55 dB from the figure of merit to yield the field strength in units of decibels above a millivolt per meter (dBmV/m). Dividing this value by 20 and taking the inverse logarithm yields the field strength in millivolts per meter (mV/m). Table 3.5 below shows the ambient field strength required to produce "just perceptible" interference in the best, median, and worst performing television receivers for each of the four test channels.

Test Sample	Channel 6		Channel 12		Channel 78		Channel 59	
	Max. Suscept.	Avg. Suscept.	Max. Suscept.	Avg. Suscept.	Max. Suscept.	Avg. Suscept.	Max. Suscept.	Avg. Suscept.
Best	40.0	49.1	77.1	217.0	114.0	314.1	100.5	971.6
Median	7.1	13.7	27.4	61.4	28.6	79.6	23.8	127.1
Worst	0.8	0.9	0.5	1.4	0.7	1.2	0.8	3.7

Table 3.5 Ambient Field Strength (mV/m) Required to Produce "Just Perceptible" Interference (55 dB D/U) in Television Receivers

Table 3.5 clearly shows that the worst performing television receivers are extremely sensitive to radiated co-channel ambient fields. Even in the median performing receiver, DPU interference occurs at relatively low ambient field strengths, particularly

at VHF frequencies. In contrast, the susceptibility performance of the best performing television receiver, for each test channel, is comparable to the performance of a cable converter (Section 3.4.1.3 contains cable converter test results).

The figure of merit data shows a general improvement in susceptibility performance with increasing frequency. The "average susceptibility" figure of merit for the median performing receiver increases by 20 dB between cable channel 6 (82 - 88 MHz) and broadcast channel 59 (740 - 746 MHz). The improvement is only 10 dB for the "maximum susceptibility" orientation for the same two test channels.

The figure of merit is highly dependent on the orientation of the receiver with respect to the DPU source, particularly at higher frequencies. For this reason, a single measurement performed on a television receiver at an arbitrary orientation can be misleading with regard to the maximum and/or average susceptibility. Figures 3.12 and 3.13 demonstrate the variation in relative susceptibility of a television receiver, as a function of orientation, for cable channel 6 and broadcast channel 59, respectively. These plots were created by first radiating the television receiver with a constant ambient interfering field. The turntable was then slowly rotated through a 360 degree arc while the magnitude of the interfering signal, at the measurement test point location, was measured on a spectrum analyzer. For this test, the spectrum analyzer was placed in the "zero span" mode (tuned RF receiver), and the sweep time was adjusted to approximate the time required for one full rotation of the turntable. As can be seen from the two figures, the variation in relative susceptibility to radiated fields is much more pronounced on the higher test channel.

In general, television receivers connected to a cable source are least susceptible to DPU ambient fields when the picture screen is oriented toward the radiation source, and most susceptible when the assembly, consisting of the RF input connector, interconnect cable, and tuner shielded enclosure, is oriented broadside to the plane of the impinged field. The maximum susceptibility orientation, for 84% of the DPU tests, fell within one of the shaded arcs depicted in Figure 3.14.

3.4.1.2 VCR Radiated Susceptibility Tests Results

Tables 3.6 through 3.9 present the shielding effectiveness figures of merit for the test sample population of 8 VCR's. The tabular data format is the same as that described for television receiver susceptibility in the previous Section. Because there are an even number of test samples in this category, a median figure of merit was interpolated between the pair of median performing test samples indicated by an asterisk. This median value is used in Table 3.10 below and in the graphs of Section 3.4.1.4.

The range in performance between the best performing VCR and worst performing VCR, averaged over the four test channels, is approximately 18.5 dB (less than a

FIGURE 3.12 TYPICAL PLOT OF TELEVISION RECEIVER RELATIVE SUSCEPTIBILITY VERSUS ORIENTATION

CABLE CHANNEL 6

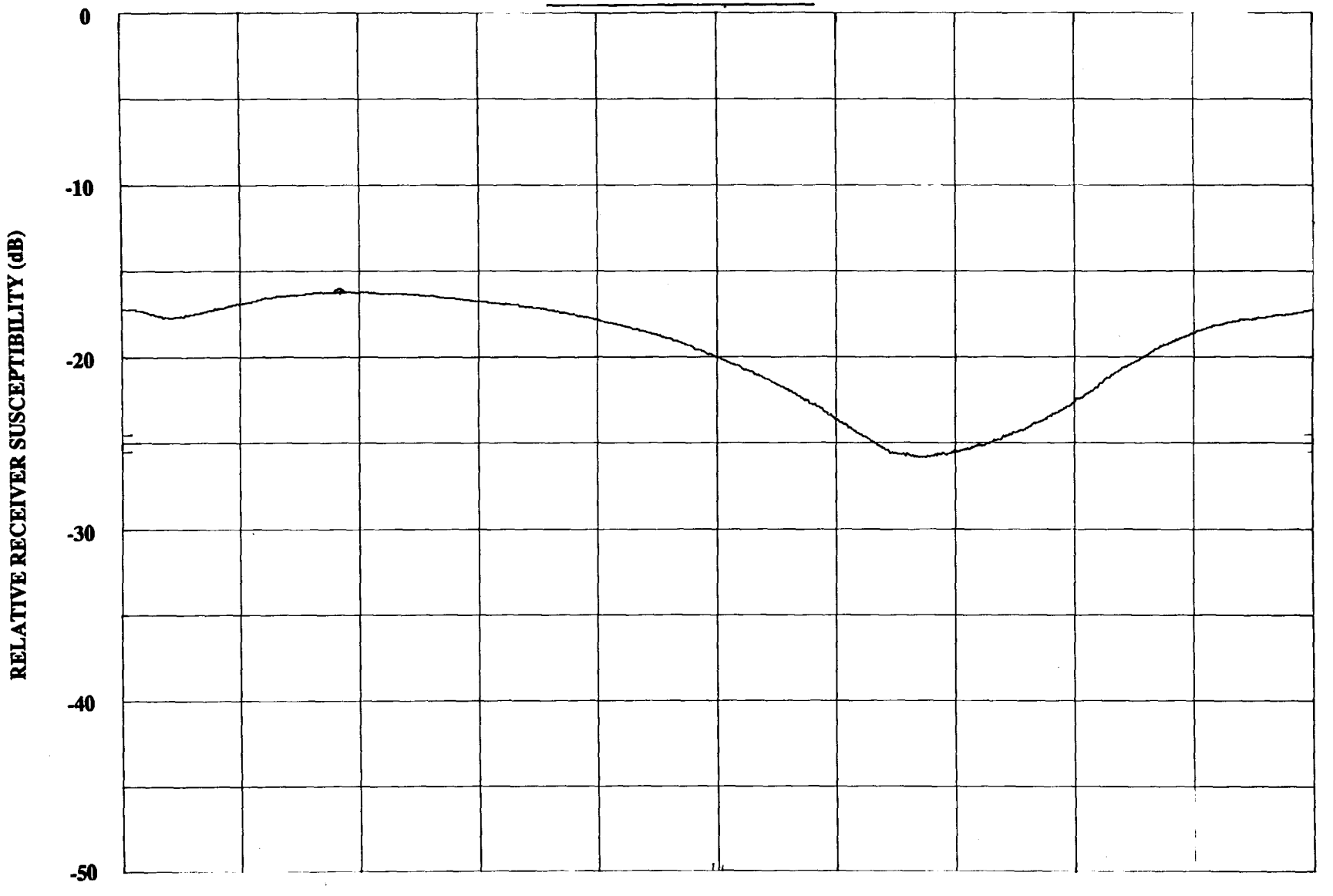

CARL T. JONES CORPORATION

FIGURE 3.13 TYPICAL PLOT OF TELEVISION RECEIVER RELATIVE SUSCEPTIBILITY VERSUS ORIENTATION

BROADCAST CHANNEL 59

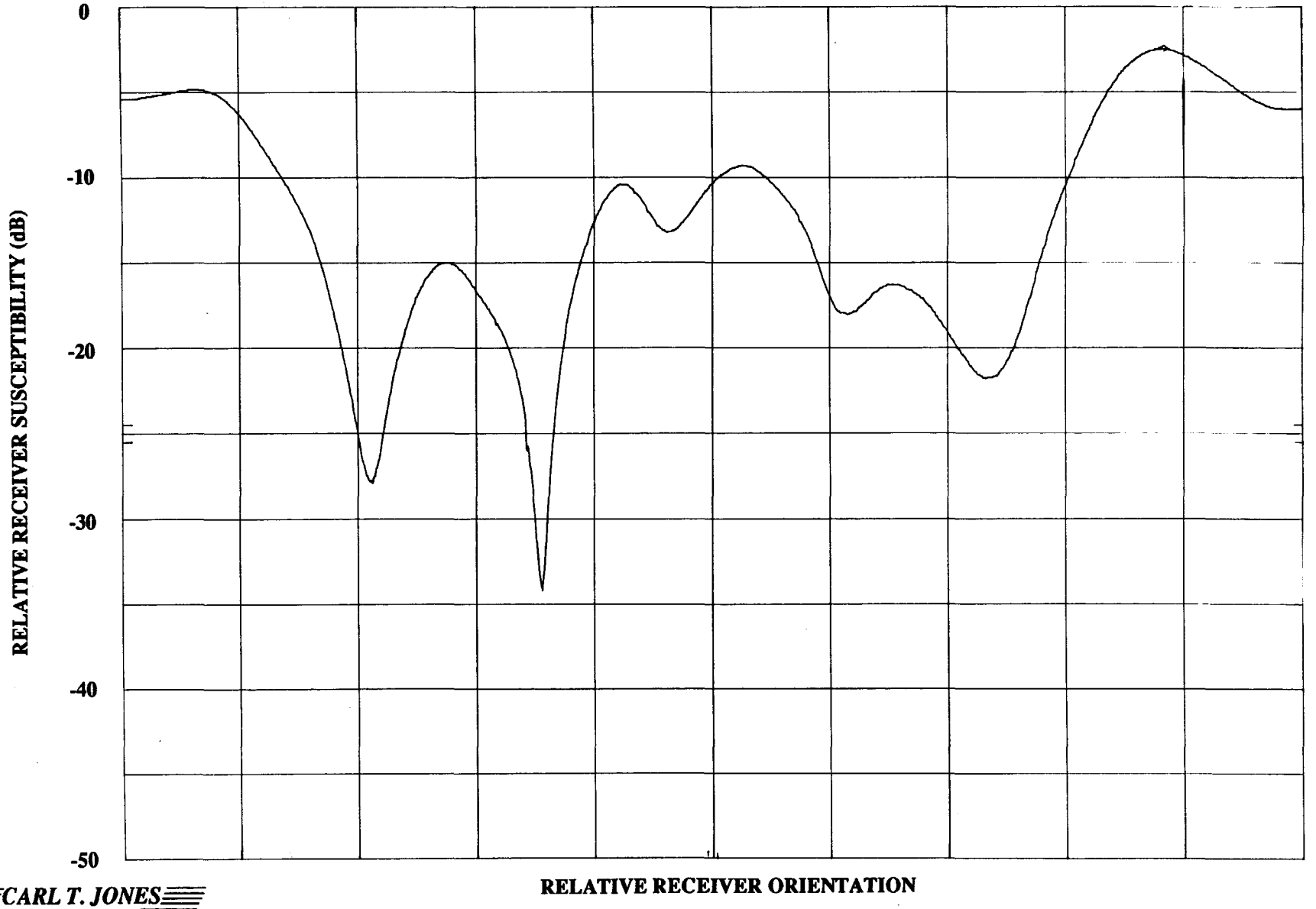

CARL T. JONES CORPORATION

FIGURE 3.14 TELEVISION RECEIVER MAXIMUM SUSCEPTIBILITY ORIENTATION

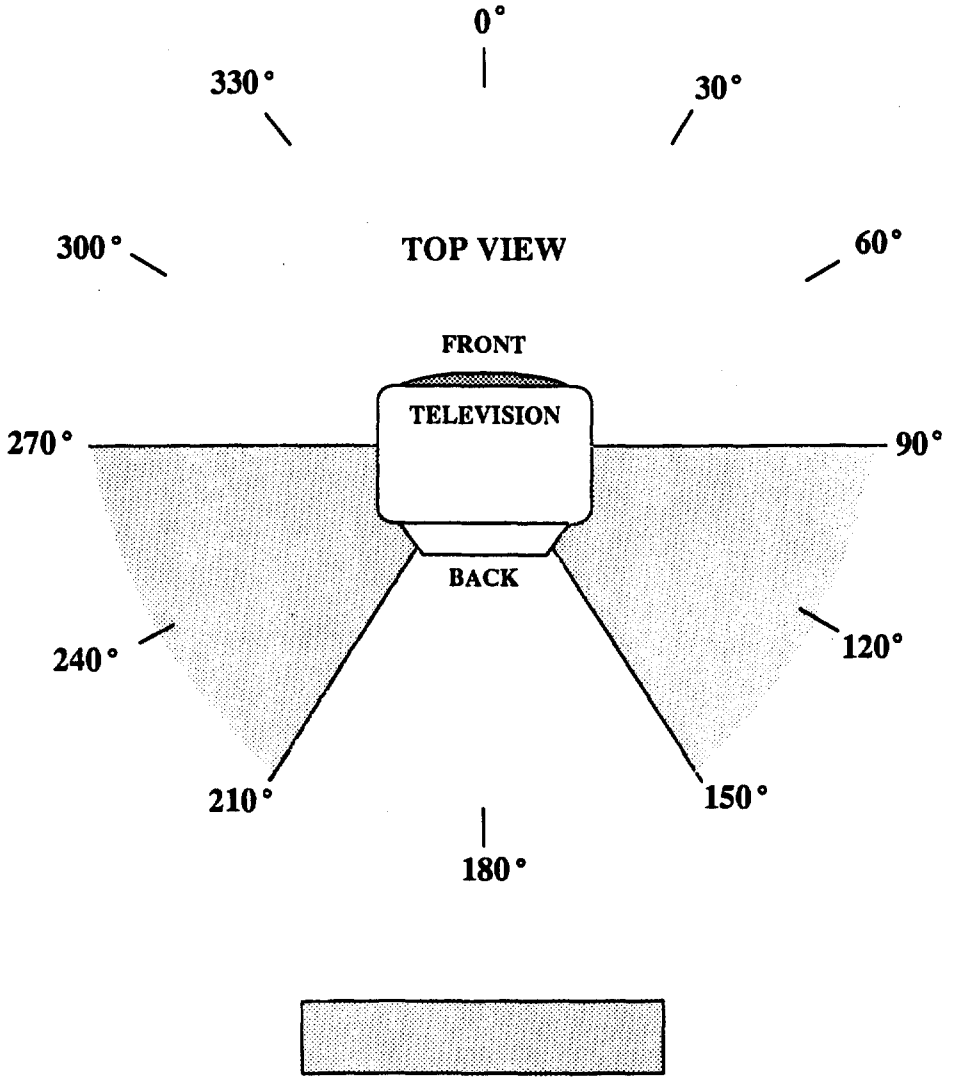

TABLE 3.6
DPU SHIELDING EFFECTIVENESS FIGURE OF MERIT
RADIATED SUSCEPTIBILITY

VIDEO CASSETTE RECORDERS

CABLE CHANNEL 6 (82–88 MHz)

SAMPLE NO.	MAXIMUM SUSCEPT-IBILITY	ORIENTATION (degrees) 45.0	90.0	135.0	180.0	225.0	270.0	315.0	AVERAGE SUSCEPT-IBILITY
102	62.0	69.5	74.0	76.0	65.0	63.0	64.0	64.5	68.8
106	63.5	69.5	73.0	75.0	75.0	64.0	66.0	67.5	70.3
103	65.5	65.5	70.5	70.5	72.0	69.0	72.5	73.5	70.4
104	71.5 *	79.0	76.5	83.5	85.5	80.5	83.0	84.5	81.5 *
107	76.0 *	77.5	81.0	82.5	81.0	82.5	82.5	81.0	80.8 *
101	81.0	81.5	82.5	86.0	88.5	82.5	91.5	88.5	86.1
108	81.0	87.0	88.0	85.0	86.0	82.0	84.5	86.5	85.3
105	87.0	90.5	94.5	98.5	95.5	89.0	90.0	90.0	92.7

NOTE: Because there are an even number of samples in this test no single median sample is indicated above.
An interpolated figure of merit pertaining to the average of the two median samples (*) is represented in the graphical analysis of Section 3.4.1.4.

TABLE 3.7
DPU SHIELDING EFFECTIVENESS FIGURE OF MERIT
RADIATED SUSCEPTIBILITY

VIDEO CASSETTE RECORDERS

CABLE CHANNEL 12 (204–210 MHz)

SAMPLE NO.	MAXIMUM SUSCEPT-IBILITY	ORIENTATION (degrees) 45.0	90.0	135.0	180.0	225.0	270.0	315.0	AVERAGE SUSCEPT-IBILITY
102	77.2	83.7	86.2	85.7	92.7	79.2	80.2	85.7	85.1
106	78.2	80.2	80.7	79.7	85.7	84.2	85.7	90.7	84.1
103	81.2	83.2	88.2	103.2	88.2	86.7	88.2	90.2	91.6 *
107	82.2 *	86.7	92.7	91.2	91.2	84.2	84.2	84.7	88.0
108	85.2 *	90.7	96.2	103.2	99.2	89.2	92.2	103.7	97.2
101	86.2	89.7	91.7	91.2	89.7	89.2	89.2	87.7	89.5 *
104	91.2	93.2	95.7	111.7	96.7	91.7	94.2	101.7	100.1
105	95.7	98.7	106.7	105.7	109.7	106.7	97.7	97.2	103.8

NOTE: Because there are an even number of samples in this test no single median sample is indicated above.
An interpolated figure of merit pertaining to the average of the two median samples (*) is represented in the graphical analysis of Section 3.4.1.4.

TABLE 3.8
DPU SHIELDING EFFECTIVENESS FIGURE OF MERIT
RADIATED SUSCEPTIBILITY

VIDEO CASSETTE RECORDERS

CABLE CHANNEL 78 (546–552 MHz)

SAMPLE NO.	MAXIMUM SUSCEPT-IBILITY	ORIENTATION (degrees) 45.0	90.0	135.0	180.0	225.0	270.0	315.0	AVERAGE SUSCEPT-IBILITY
106	80.1	89.1	94.6	98.6	102.1	93.6	89.6	103.1	96.4
107	82.6	88.6	90.1	107.1	97.6	87.6	91.1	105.1	97.8
103	83.6	86.1	90.1	91.1	86.6	88.1	96.1	91.6	90.0
102	84.6 *	90.1	94.1	91.1	94.1	95.6	97.1	97.1	93.8
101	85.1 *	92.1	96.6	94.6	102.1	95.6	97.6	102.1	97.1
108	87.1	96.6	90.6	82.6	96.6	93.1	86.6	82.6	91.1 *
105	89.1	91.1	87.6	86.6	97.6	92.6	87.6	89.1	90.9
104	89.1	90.6	87.6	98.6	92.1	92.1	95.6	101.1	94.6 *

NOTE: Because there are an even number of samples in this test no single median sample is indicated above.
An interpolated figure of merit pertaining to the average of the two median samples (*) is represented in the graphical analysis of Section 3.4.1.4.

TABLE 3.9
DPU SHIELDING EFFECTIVENESS FIGURE OF MERIT
RADIATED SUSCEPTIBILITY

VIDEO CASSETTE RECORDERS

BROADCAST CHANNEL 59 (740–746 MHz)

SAMPLE NO.	MAXIMUM SUSCEPT-IBILITY	ORIENTATION (degrees) 45.0	90.0	135.0	180.0	225.0	270.0	315.0	AVERAGE SUSCEPT-IBILITY
105	78.0	85.0	81.5	92.0	94.5	91.5	108.5	96.0	95.9
107	80.5	88.0	88.5	85.5	92.5	90.0	86.0	100.5	90.9
106	81.5	85.0	84.5	91.0	91.0	89.5	87.0	88.0	87.8
102	85.5 *	91.0	90.5	97.5	96.0	94.0	92.5	91.5	93.0
103	88.0 *	92.5	96.5	96.0	90.0	88.5	91.0	99.0	93.6 *
101	88.5	90.5	92.0	103.5	95.0	90.0	96.5	95.0	95.2 *
104	88.5	99.0	96.5	100.0	109.0	90.0	100.0	103.5	100.5
108	90.0	94.5	95.5	92.5	96.0	96.0	98.0	102.0	96.3

NOTE: Because there are an even number of samples in this test no single median sample is indicated above.
An interpolated figure of merit pertaining to the average of the two median samples (*) is represented in the graphical analysis of Section 3.4.1.4.

factor of 10). This range is considerably less than the range for television receivers (41.7 dB).

The field strength required to produce "just perceptible" interference in the best, median, and worst performing VCR is tabulated in Table 3.10 below.

Test Sample	Channel 6		Channel 12		Channel 78		Channel 59	
	Max. Suscept.	Avg. Suscept.	Max. Suscept.	Avg. Suscept.	Max. Suscept.	Avg. Suscept.	Max. Suscept.	Avg. Suscept.
Best	40.0	76.8	108.9	274.2	50.9	137.2	56.5	188.8
Median	8.7	20.3	27.4	59.8	31.2	91.7	38.9	93.4
Worst	2.3	4.9	12.9	28.6	18.1	56.2	14.2	43.5

Table 3.10 Ambient Field Strength (mV/m) Required to Produce "Just Perceptible" Interference (55 dB D/U) in VCR's

The worst and median performing VCR's, on each test channel, exhibit DPU interference at relatively low ambient field strengths, particularly at VHF frequencies. The performance of the worst performing VCR, however, is approximately 18 times (25 dB) better than the performance of the worst performing television receiver (averaging maximum and average susceptibility field strengths across the four test channels). In contrast, the performance of the median VCR is almost identical to the performance of the median television receiver when averaged across the four test channels.

DPU susceptibility performance of the median VCR improves approximately 10 dB between cable channel 6 and cable channel 12, and then exhibits only gradual improvement between cable channel 12 and broadcast channel 59.

3.4.1.3 Cable Converter Radiated Susceptibility Tests Results

Contained in Tables 3.11 through 3.13 are the shielding effectiveness figures of merit for the test sample population of 13 cable converters. The tabular data format is the same as that described in the previous sections for television receivers and VCR's.

Because cable converters do not tune to broadcast channel 59, no results are presented for this channel. Further, four of the thirteen cable converters did not tune to cable channel 78 and, therefore, only nine cable converters were tested on channel 78.

TABLE 3.11
DPU SHIELDING EFFECTIVENESS FIGURE OF MERIT
RADIATED SUSCEPTIBILITY

CABLE CONVERTERS

CABLE CHANNEL 6 (82–88 MHz)

SAMPLE NO.	MAXIMUM SUSCEPT-IBILITY	ORIENTATION (degrees) 45.0	90.0	135.0	180.0	225.0	270.0	315.0	AVERAGE SUSCEPT-IBILITY
206	81.0	84.0	85.5	90.5	96.5	83.5	93.5	99.5	91.6
203	89.0	90.0	90.5	92.0	97.0	89.5	91.0	102.5	94.1
208	89.0	89.5	90.0	92.0	93.5	91.5	93.0	93.5	91.7
209	90.0	90.0	94.5	91.5	90.5	100.0	93.5	91.5	93.4
218	90.0	91.0	94.0	104.0	93.5	92.0	92.0	91.5	94.9 –MEDIAN
201	90.5	91.5	94.5	95.5	94.5	91.5	91.5	91.0	92.8
222	92.0 –MEDIAN	93.5	93.0	94.5	96.5	96.0	97.5	98.0	95.4
214	92.0	93.0	94.5	95.0	95.0	91.5	93.5	93.0	93.6
216	92.5	95.0	95.5	104.5	99.0	93.5	94.0	93.0	96.9
224	93.0	95.0	96.5	97.5	99.0	97.0	99.0	100.5	97.5
212	93.5	98.0	109.0	106.5	109.5	95.0	102.0	108.5	104.7
220	97.0	98.0	99.5	101.0	104.0	99.0	101.0	103.0	100.6
204	101.0	104.5	110.5	108.5	103.5	104.5	102.5	101.5	105.2

NOTE: Of the 24 cable converters received, there are a total of 13 unique cable converters in the sample population.

TABLE 3.12
DPU SHIELDING EFFECTIVENESS FIGURE OF MERIT
RADIATED SUSCEPTIBILITY

CABLE CONVERTERS

CABLE CHANNEL 12 (204–210 MHz)

SAMPLE NO.	MAXIMUM SUSCEPT-IBILITY	ORIENTATION (degrees) 45.0	90.0	135.0	180.0	225.0	270.0	315.0	AVERAGE SUSCEPT-IBILITY
206	85.2	90.2	94.7	94.2	90.2	92.2	93.2	86.2	91.4
222	96.2	97.2	102.2	104.7	101.2	100.7	104.7	100.2	101.4
201	96.7	105.7	107.7	109.2	106.2	102.2	106.2	99.7	105.1
214	98.2	100.2	101.2	101.7	118.2	112.2	99.7	102.7	107.4
216	99.7	103.7	110.7	109.2	108.7	111.2	105.2	105.2	107.5
209	102.2	111.2	110.7	113.2	113.7	111.7	108.2	109.7	110.7
218	102.2 –MEDIAN	103.7	109.7	108.7	109.7	106.7	106.7	106.7	107.2
212	103.2	105.2	108.2	115.2	111.7	109.7	107.2	107.7	109.3 –MEDIAN
204	103.2	108.2	117.2	109.2	110.2	108.7	112.2	105.7	110.3
224	107.7	111.2	111.2	110.2	110.2	119.7	125.2	112.7	115.7
220	107.7	115.7	122.7	118.7	118.2	113.7	113.2	112.7	116.4
203	108.2	110.2	121.1	125.7	117.7	120.2	113.2	112.2	118.0
208	111.2	116.2	126.2	115.7	114.7	116.2	116.2	113.2	117.5

NOTE: Of the 24 cable converters received, there are a total of 13 unique cable converters in the sample population.

TABLE 3.13
DPU SHIELDING EFFECTIVENESS FIGURE OF MERIT
RADIATED SUSCEPTIBILITY

CABLE CONVERTERS

CABLE CHANNEL 78 (546–552 MHz)

SAMPLE NO.	MAXIMUM SUSCEPT-IBILITY	ORIENTATION (degrees) 45.0	90.0	135.0	180.0	225.0	270.0	315.0	AVERAGE SUSCEPT-IBILITY
206	87.1	94.6	95.6	114.6	97.6	94.1	94.1	89.6	100.9
214	87.6	95.1	99.1	103.1	91.1	88.6	101.6	88.6	96.4
201	88.6	91.1	93.1	94.6	98.6	99.1	93.1	95.1	94.8
216	95.0	99.5	113.0	109.5	96.5	104.0	99.0	97.0	104.1
209	95.1 –MEDIAN	96.6	97.1	95.6	96.1	103.6	97.1	100.6	98.2
212	96.1	98.6	101.1	105.1	102.1	101.1	111.1	102.1	103.3 –MEDIAN
222	96.1	99.1	116.6	107.1	97.1	103.1	96.6	102.6	105.3
220	102.1	103.6	115.6	105.1	107.6	112.1	105.6	105.6	106.4
218	102.6	106.6	102.1	105.6	105.1	103.1	107.1	116.1	107.3

NOTE: Of the 24 cable converters received, there are a total of 13 unique cable converters in the sample population.

There are several sample numbers missing in the tabular data in this category. The reason is that several of the cable converters received by CTJC were duplicate models, and it was decided not to test these units. Therefore, although the duplicate units were assigned a test sample number on receipt, they were not tested.

In general, the figure of merit for the best performing cable converter is approximately 10 times (20 dB) better than the worst performing cable converter. There is a marked increase in the figures of merit for cable converters when compared to both television receivers and VCR's on each of the three test channels.

The field strength required to produce "just perceptible" interference in the best, median, and worst performing cable converter for each of the three test channels is tabulated in Table 3.14 below.

Test Sample	Channel 6		Channel 12		Channel 78	
	Max. Suscept.	Avg. Suscept.	Max. Suscept.	Avg. Suscept.	Max. Suscept.	Avg. Suscept.
Best	199.5	323.6	648.6	1407.7	241.0	465.6
Median	70.8	98.8	230.1	518.2	101.6	261.2
Worst	19.9	67.6	32.5	66.0	40.4	98.1

Table 3.14 Ambient Field Strength (mV/m) Required to Produce "Just Perceptible" Interference (55 dB D/U) in Cable Converters

The table indicates that a significantly higher field strength is required to produce "just perceptible" interference in a cable converter than in a television receiver or VCR. This means that cable converters are significantly less sensitive to radiated DPU interference than are television receivers or VCR's. The field strength required to produce "just perceptible" interference in the worst performing cable converter is greater than that required to produce "just perceptible" interference in the median performing television receiver or VCR. Comparison of the performance of the median performing cable converter with the median performing television receiver or VCR shows greater than a 15 dB improvement in performance.

3.4.1.4 Graphical Comparison of Radiated Susceptibility Results

A graphical comparison of the radiated susceptibility performance of television receivers, VCR's, and cable converters is presented in Figures 3.15 and 3.16 in terms of the field strength required to produce "just perceptible" interference. The figures

FIGURE 3.15 FIELD STRENGTH REQUIRED TO PRODUCE "JUST PERCEPTIBLE" INTERFERENCE IN THE MEDIAN TEST SAMPLE

ORIENTATION OF MAXIMUM SUSCEPTIBILITY

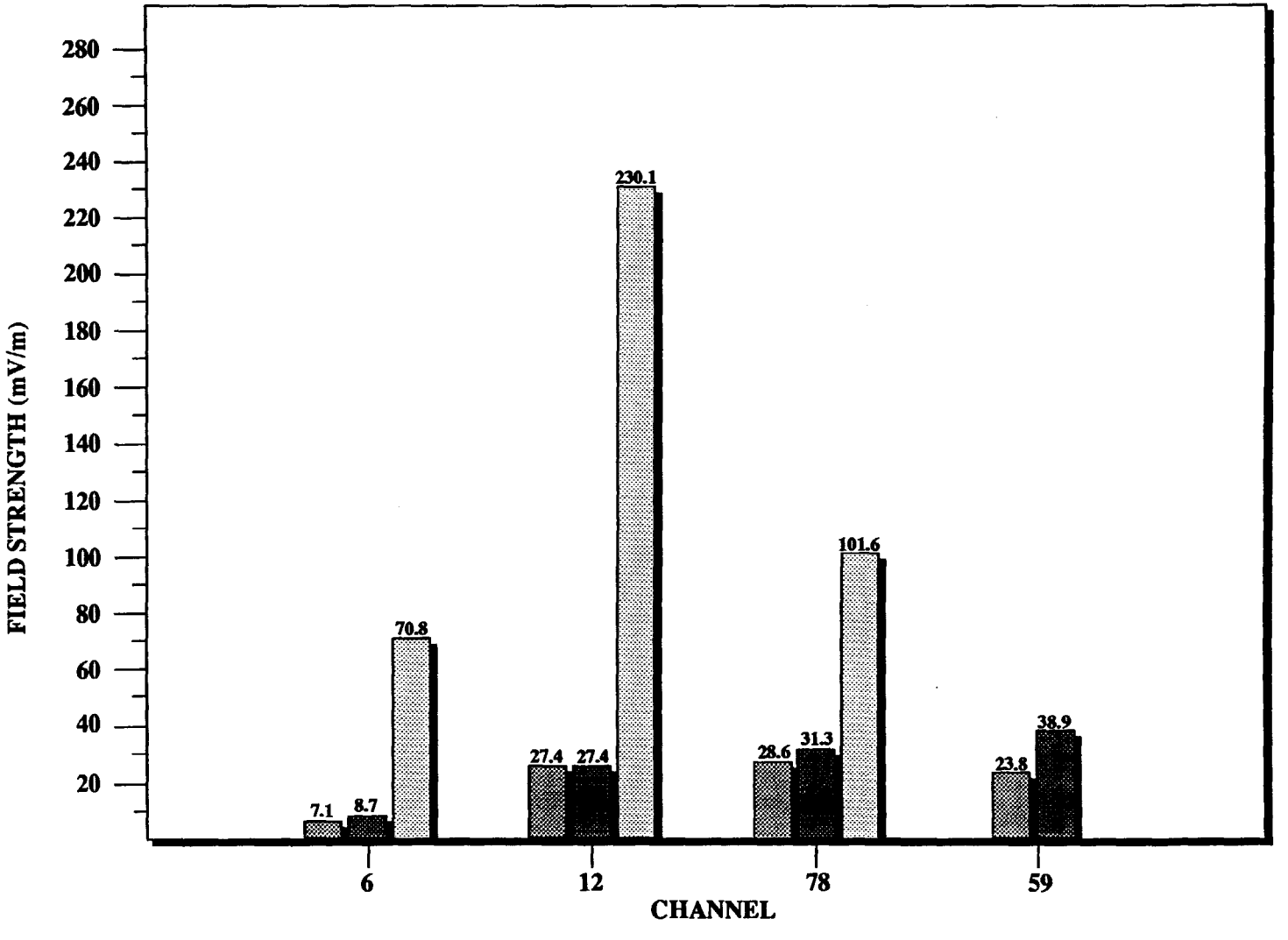

CARL T. JONES CORPORATION

TV RECEIVER VCR CABLE CONVERTER

FIGURE 3.16 FIELD STRENGTH REQUIRED TO PRODUCE "JUST PERCEPTIBLE" INTERFERENCE IN THE MEDIAN TEST SAMPLE

AVERAGE SUSCEPTIBILITY

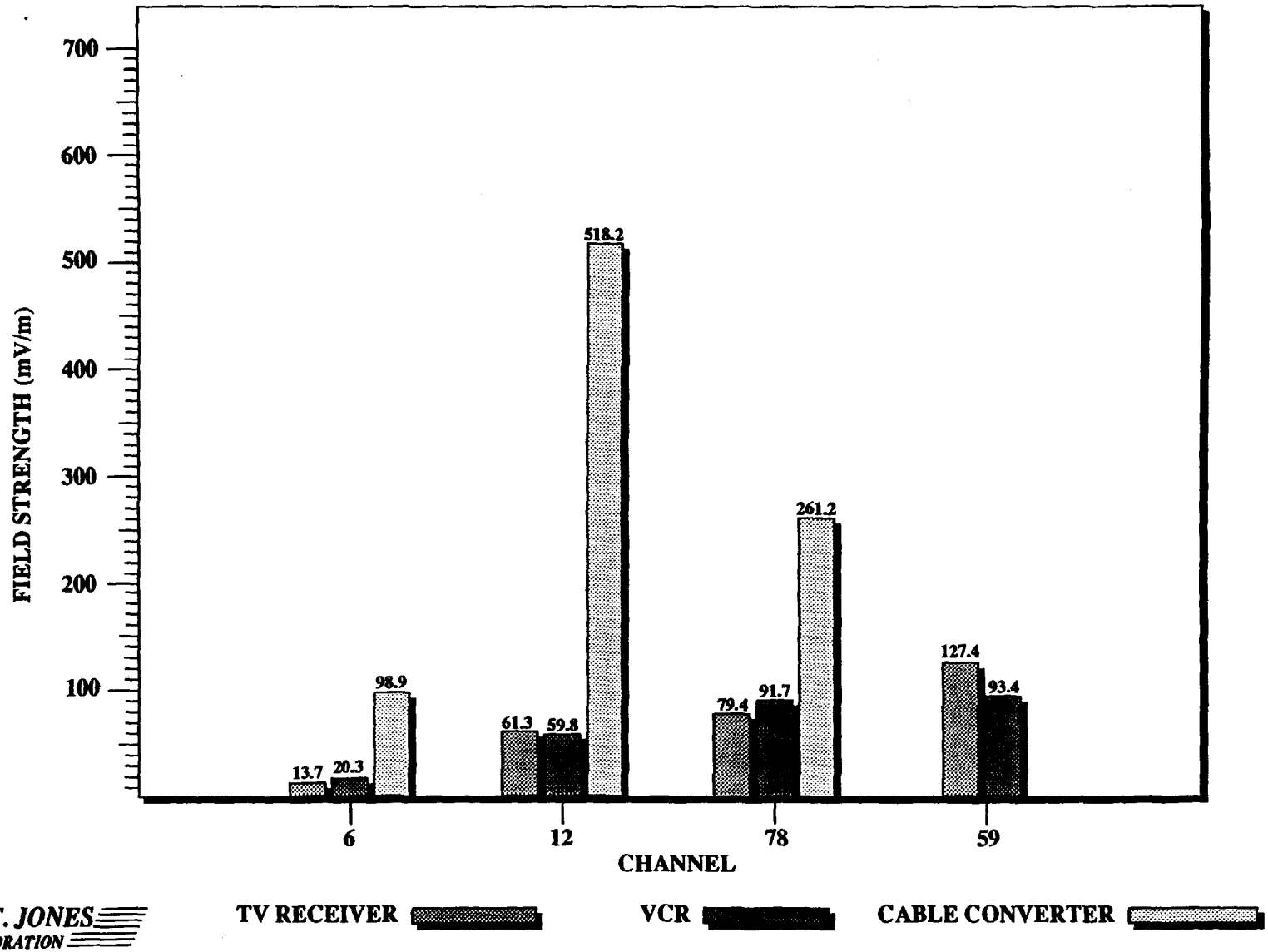

CARL T. JONES CORPORATION

compare performance of the median performing test samples in each device category at each of the test channels. Keep in mind that cable converters do not tune to broadcast channel 59 and, therefore, no cable converter data is presented for this test channel.

Comparative results presented in Figure 3.15 represent performance of the median test sample oriented for maximum susceptibility. The results presented in Figure 3.16 represent performance of the median test sample considering the average of the measurements made at the eight incremental orientations (average susceptibility).

As demonstrated by the figures, significantly higher field strengths are required to produce "just perceptible" interference in the median cable converter than are required to produce "just perceptible" interference in television receivers or VCR's. The figures also show that there is little difference in the performance of the median television receiver and the median VCR on each of the test channels.

Figures 3.17 and 3.18 present a graphical comparison of the radiated susceptibility performance of the median test sample considering performance on all three test channels. Channel 59 test results are excluded in the median sample performance due to the fact that no cable converter data is available for this channel. These figures again show that cable converters exhibit an approximate 15 dB higher tolerance to DPU interference fields than do television receivers or VCR's. The figures also show a 6 to 9 dB difference between average susceptibility and maximum susceptibility performance for the median performing receiver in each device category.

3.4.2 Conducted Current Susceptibility Test Results

Conducted current susceptibility tests were performed on the sample population of 35 television receivers, 8 VCR's, and 13 cable converters in accordance with the procedures described in Section 3.3.5. Tests were performed with a current injected onto the shield of the input coaxial cable and again with a current injected onto the AC power cable. Tests were performed at test channels 6 and 12. The test results are presented in a tabular and graphic format in the following Sections.

3.4.2.1 Television Receiver Conducted Current Susceptibility Test Results

Tables 3.15 and 3.16 contain tabulations of the shielding effectiveness figure of merit for television receiver conducted current susceptibility. Table 3.15 presents the results for cable channel 6, and Table 3.16 presents the results for cable channel 12. The figure of merit data is presented in order of the worst performing test sample to the best performing test sample with respect to conducted current on the input coaxial cable shield. The order of performance may be significantly different with respect to

FIGURE 3.17 FIELD STRENGTH REQUIRED TO PRODUCE "JUST PERCEPTIBLE" INTERFERENCE IN THE MEDIAN TEST SAMPLE CONSIDERING ALL TEST CHANNELS

ORIENTATION OF MAXIMUM SUSCEPTIBILITY

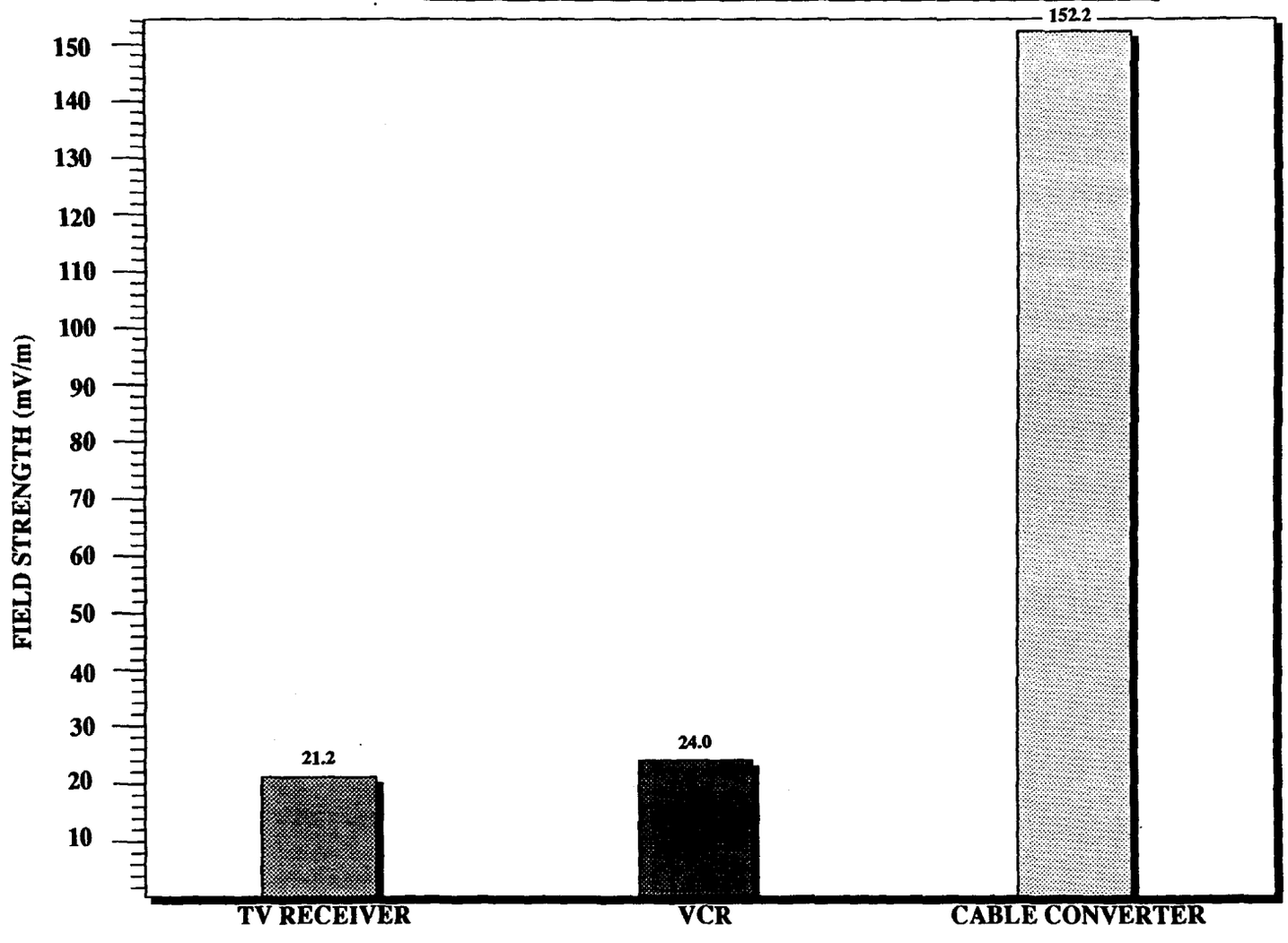

CARL T. JONES CORPORATION

FIGURE 3.18 FIELD STRENGTH REQUIRED TO PRODUCE "JUST PERCEPTIBLE" INTERFERENCE IN THE MEDIAN TEST SAMPLE CONSIDERING ALL TEST CHANNELS

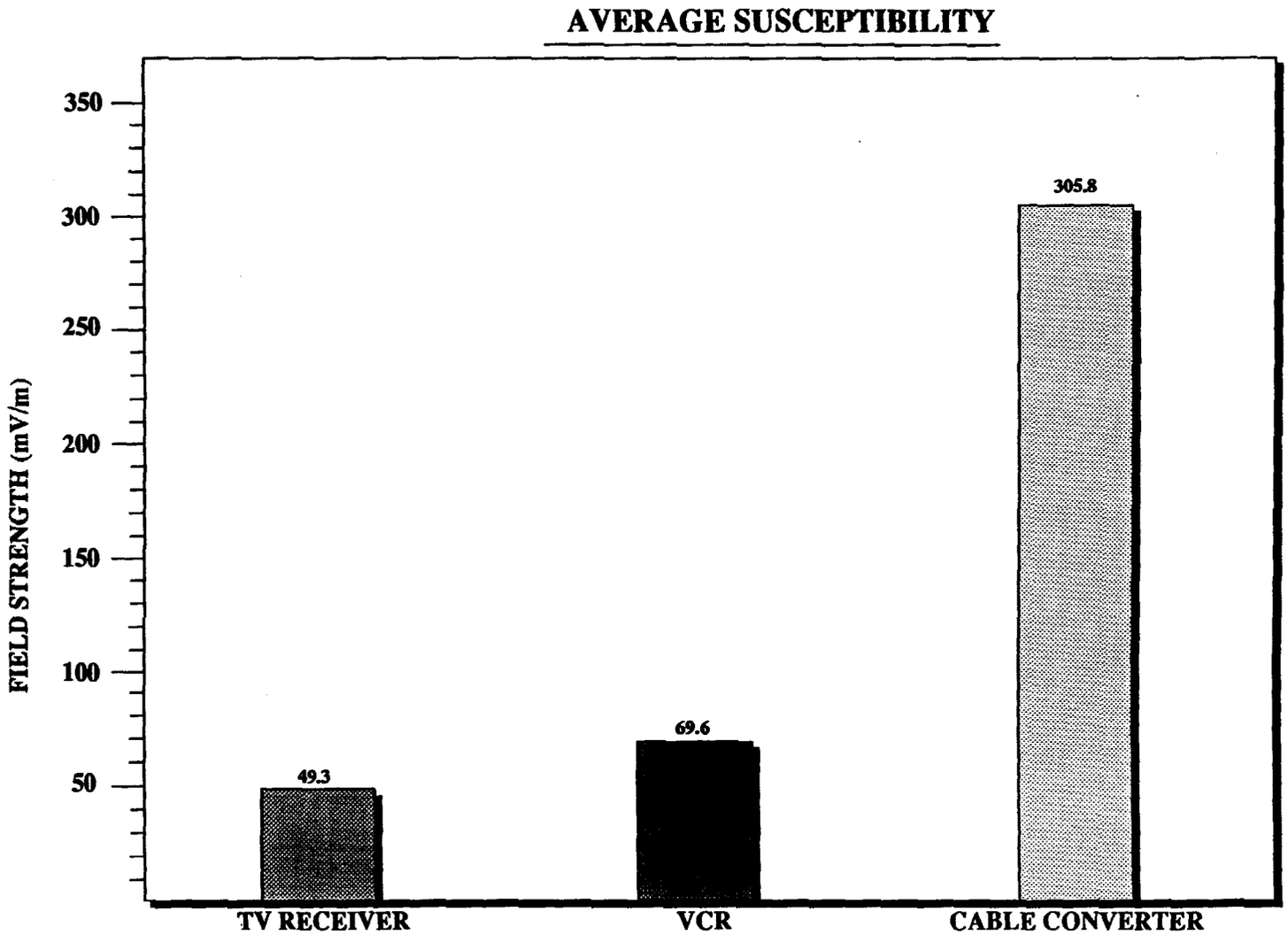

TABLE 3.15
DPU SHIELDING EFFECTIVENESS FIGURE OF MERIT
CONDUCTED CURRENT SUSCEPTIBILITY

TELEVISION RECEIVERS

CABLE CHANNEL 6 (82–88 MHz)

SAMPLE NO.	RF INPUT CABLE SHIELD	AC POWER CABLE
034	62.6	69.6
027	65.1	71.6
028	65.6	76.6
019	66.1	77.1
018	68.6	76.1
016	69.6	78.6
021	70.1	80.1
005	70.6	96.1
033	76.6	86.1
035	78.1	85.1
007	78.1	96.6
013	79.6	84.6
029	79.6	103.6
009	81.6	92.6
017	82.1	95.1
011	82.6	96.1
001	84.6	93.6
008	85.1 –MEDIAN	85.1
002	85.6	81.6
003	86.1	84.1
006	88.6	107.1
010	89.6	85.1
014	90.1	87.1
032	90.1	87.6
022	92.1	111.6
023	92.1	105.1
030	92.1	91.1 –MEDIAN
020	92.6	100.1
004	93.6	97.1
026	95.1	109.6
031	97.1	115.1
012	97.1	84.1
025	97.6	99.1
015	98.1	105.1
024	103.1	97.1

TABLE 3.16
DPU SHIELDING EFFECTIVENESS FIGURE OF MERIT
CONDUCTED CURRENT SUSCEPTIBILITY

TELEVISION RECEIVERS

CABLE CHANNEL 12 (204–210 MHz)

SAMPLE NO.	RF INPUT CABLE SHIELD	AC POWER CABLE
027	42.6	59.6
028	48.1	69.1
019	59.6	75.1
018	61.6	79.6
007	62.6	67.6
034	63.1	84.6
016	64.6	79.6
021	65.6	71.6
001	67.6	71.6
011	76.1	89.6
029	77.1	97.6
013	78.1	91.6 –MEDIAN
002	79.6	90.6
017	80.6	85.1
014	81.1	93.6
005	82.6	87.1
020	83.1	88.1
033	83.6 –MEDIAN	97.6
032	84.6	89.6
004	84.6	92.1
003	85.6	90.1
030	86.6	92.6
006	86.6	97.1
031	87.1	93.6
012	87.1	102.6
010	87.6	101.1
009	88.1	96.6
015	88.6	83.6
008	89.6	94.1
025	91.1	97.1
024	92.6	110.6
026	92.6	112.6
035	95.1	102.6
023	95.1	105.1
022	104.6	97.6

currents on the AC power cable. A median test sample is identified for the input coaxial cable test and for the AC power cable test.

There is an extraordinary range in the figures of merit between the best and worst performing television receivers. The range in performance between the best and worst performing test samples, averaged over the two test channels, is 56.7 dB (a factor of 682) for susceptibility to currents flowing on the input coaxial cable shield, and 50 dB (a factor of 318) for currents flowing on the AC power cable.

Of the 35 receivers tested on channel 6, 27 were more susceptible to currents flowing on the shield of the input cable than on the AC power cable, 1 was equally susceptible, and 7 were more susceptible to currents flowing on the AC power cable. At cable channel 12, only 2 receivers were more susceptible to currents flowing on the AC power cable, and 33 were more susceptible to currents flowing on the shield of the input coaxial cable.

A comparison of the figures of merit for the median test samples, at each test channel, indicate that in the median performing receiver, there is a 6 to 8 dB greater susceptibility to interfering currents flowing on the shield of the input coaxial cable compared to the AC power cable. This means that television receivers are, generally, 2 to 2.5 times more susceptible to DPU interfering currents flowing on the RF input coaxial cable shield than on the AC power cable. The difference in performance of the median test sample on the two test channels was less than 2 dB.

3.4.2.2 VCR Conducted Current Susceptibility Test Results

Tabulations of the figures of merit for VCR susceptibility to conducted currents are contained in Tables 3.17 and 3.18 for cable channels 6 and 12, respectively. Because there are an even number of test samples in this category, a median figure of merit was interpolated between the pair of median performing test samples as indicated by an asterisk.

The range in performance between the best and worst VCR test sample, averaged over the two test channels, is 26 dB (a factor of 20) for susceptibility to DPU interfering currents on the input coaxial cable shield, and 28 dB (a factor of 25) for DPU interfering currents on the AC power cable.

Six of eight test samples exhibited greater susceptibility to DPU interfering currents on the shield of the input coaxial cable than on the AC power cable at test channel 6. Five of eight test samples exhibited greater susceptibility to interfering currents on the shield of the input coaxial cable at channel 12. The average performance (all VCR's and both channels) of the 8 VCR's tested showed a 13.6 dB (a factor of 4.8) greater susceptibility to currents on the input coaxial cable shield than on the AC power cable.

TABLE 3.17
DPU SHIELDING EFFECTIVENESS FIGURE OF MERIT
CONDUCTED CURRENT SUSCEPTIBILITY

VIDEO CASSETTE RECORDERS

CABLE CHANNEL 6 (82–88 MHz)

SAMPLE NO.	RF INPUT CABLE SHIELD	AC POWER CABLE
107	84.1	91.6
106	86.6	88.1
102	90.6	96.1 *
103	95.6 *	101.1
108	97.6 *	94.9 *
104	99.1	115.6
105	103.1	94.6
101	107.1	116.1

NOTE: Because there are an even number of samples in this test no single median sample is indicated above. An interpolated figure of merit pertaining to the average of the two median samples is represented in the graphical analysis of Section 3.4.2.4.

TABLE 3.18
DPU SHIELDING EFFECTIVENESS FIGURE OF MERIT
CONDUCTED CURRENT SUSCEPTIBILITY

VIDEO CASSETTE RECORDERS

CABLE CHANNEL 12 (204–210 MHz)

SAMPLE NO.	RF INPUT CABLE SHIELD	AC POWER CABLE
103	77.1	109.1
106	81.6	96.6 *
107	82.6	94.1 *
104	89.1 *	98.6
102	91.6 *	90.6
105	96.1	111.1
108	96.1	83.6
101	104.6	86.1

NOTE: Because there are an even number of samples in this test no single median sample is indicated above. An interpolated figure of merit pertaining to the average of the two median samples (*) is represented in the graphical analysis of Section 3.4.2.4.

The input cable shield test results show a decrease in the median performance between test channels 6 and 12 of 6.1 dB. For the AC power cable test, the performance of the median receiver was unchanged between the two test channels.

A comparison of the figures of merit for the median television receiver and VCR test samples indicates that the median performing VCR is 9.5 dB less susceptible, than the median performing television receiver, to interfering currents flowing on the shield of the input coaxial cable, and 4.1 dB less susceptible to interfering currents on the AC power cable.

3.4.2.3 Cable Converter Conducted Current Susceptibility Test Results

Tables 3.19 and 3.20 contain the figures of merit for cable converter conducted current susceptibility. The range in performance between the best and worst cable converter test sample, averaged over the two test channels, is 27 dB (a factor of 22) for susceptibility to DPU interfering currents on the input coaxial cable shield and 36 dB (a factor of 63) for DPU interfering currents on the AC power cable.

A review of the tables indicates that approximately half of the cable converters were more susceptible to DPU interfering currents on the input coaxial cable shield and half of the cable converters were more susceptible to currents on the AC power cable.

The relatively high figures of merit for cable converters demonstrates a high degree of immunity in these devices to conducted currents. Comparing the figures of merit for the median performing cable converter to that of the median performing television receiver indicates that cable converters are approximately 20 dB less susceptible to DPU interfering currents than are television receivers. A similar comparison to the interpolated figure of merit for VCR's indicates that cable converters are 15 dB less susceptible to DPU interfering currents than are VCR's.

3.4.2.4 Graphical Comparison of Conducted Current Susceptibility Test Results

Figures 3.19 and 3.20 provide a graphical comparison of performance for television receivers, VCR's, and cable converters in terms of the current required to produce "just perceptible" interference. Figure 3.19 shows the performance comparison for interfering currents on the shield of the input coaxial cable; while Figure 3.20 shows the performance comparison for interfering currents on the AC power cable.

The figures clearly demonstrate that cable converters can tolerate much greater interfering currents than can television receivers or VCR's before the onset of DPU interference.

TABLE 3.19
DPU SHIELDING EFFECTIVENESS FIGURE OF MERIT
CONDUCTED CURRENT SUSCEPTIBILITY

CABLE CONVERTERS

CABLE CHANNEL 6 (82–88 Mhz)

SAMPLE NO.	RF INPUT CABLE SHIELD	AC POWER CABLE
216	95.1	96.1
224	103.1	113.1 –MEDIAN
201	104.6	111.1
222	104.6	116.6
220	104.6	114.1
206	105.1	96.1
208	105.1 –MEDIAN	115.1
203	106.1	101.1
218	106.6	104.6
214	115.1	104.1
209	115.6	116.6
212	120.1	120.1
204	123.6	119.1

NOTE: Of the 24 cable converters received, there are a total of 13 unique cable converters in the sample population.

TABLE 3.20
DPU SHIELDING EFFECTIVENESS FIGURE OF MERIT
CONDUCTED CURRENT SUSCEPTIBILITY

CABLE CONVERTERS

CABLE CHANNEL 12 (204–210 MHz)

SAMPLE NO.	RF INPUT CABLE SHIELD	AC POWER CABLE
203	95.6	108.6
201	99.6	115.6
204	100.1	89.6
212	106.6	117.6
206	107.1	95.6
214	107.6	109.6
216	108.1 –MEDIAN	83.6
208	109.6	117.6
209	110.1	113.6
224	112.1	108.6 –MEDIAN
218	114.1	98.6
220	114.6	107.6
222	121.1	111.6

NOTE: Of the 24 cable converters received, there are a total of 13 unique cable converters in the sample population.

FIGURE 3.19 CURRENT REQUIRED TO PRODUCE "JUST PERCEPTIBLE" INTERFERENCE IN THE MEDIAN TEST SAMPLE

INPUT COAXIAL CABLE SHIELD

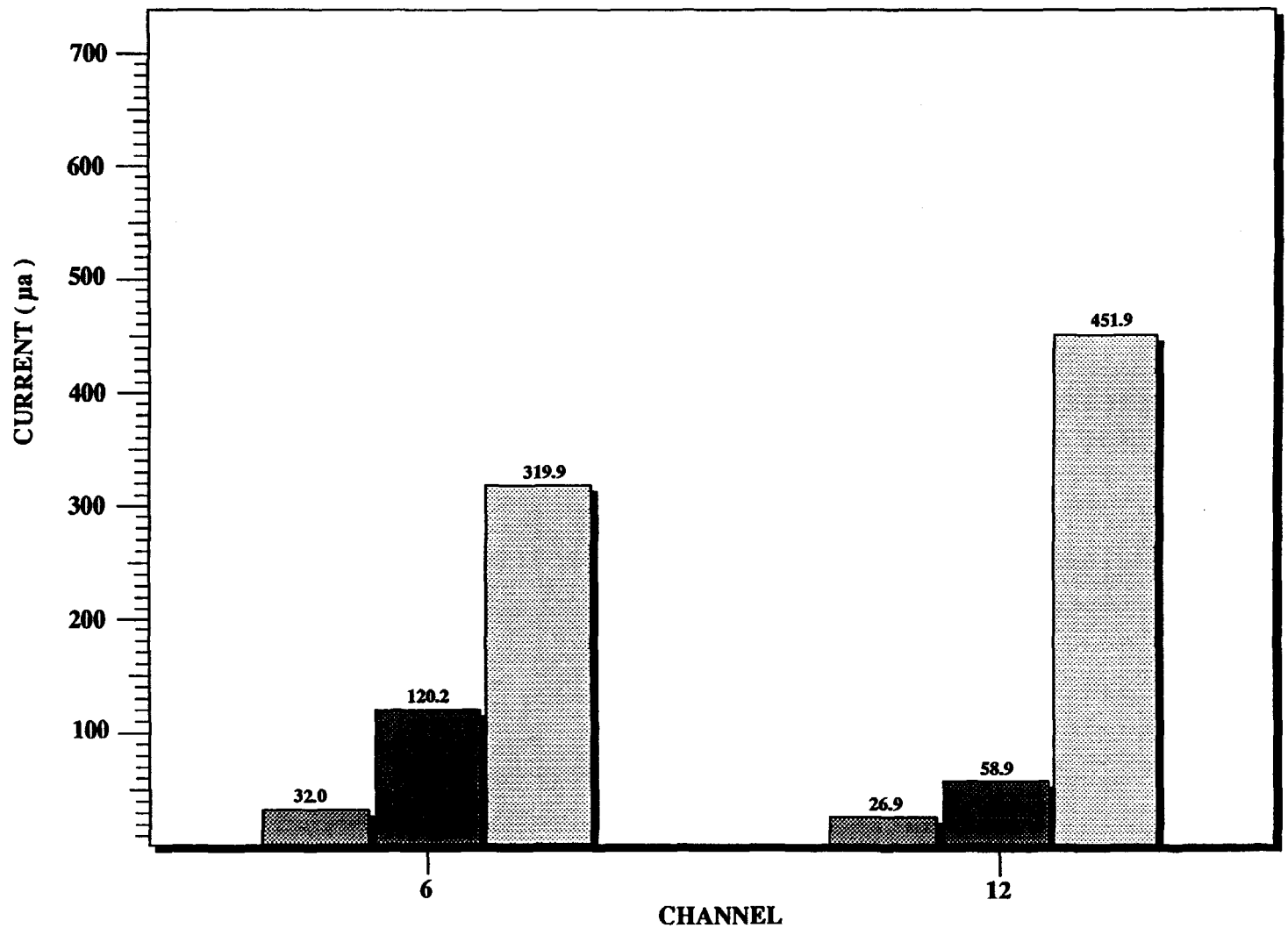

CARL T. JONES CORPORATION

TV RECEIVER VCR CABLE CONVERTER

FIGURE 3.20 CURRENT REQUIRED TO PRODUCE "JUST PERCEPTIBLE" INTERFERENCE IN THE MEDIAN TEST SAMPLE

AC POWER CABLE

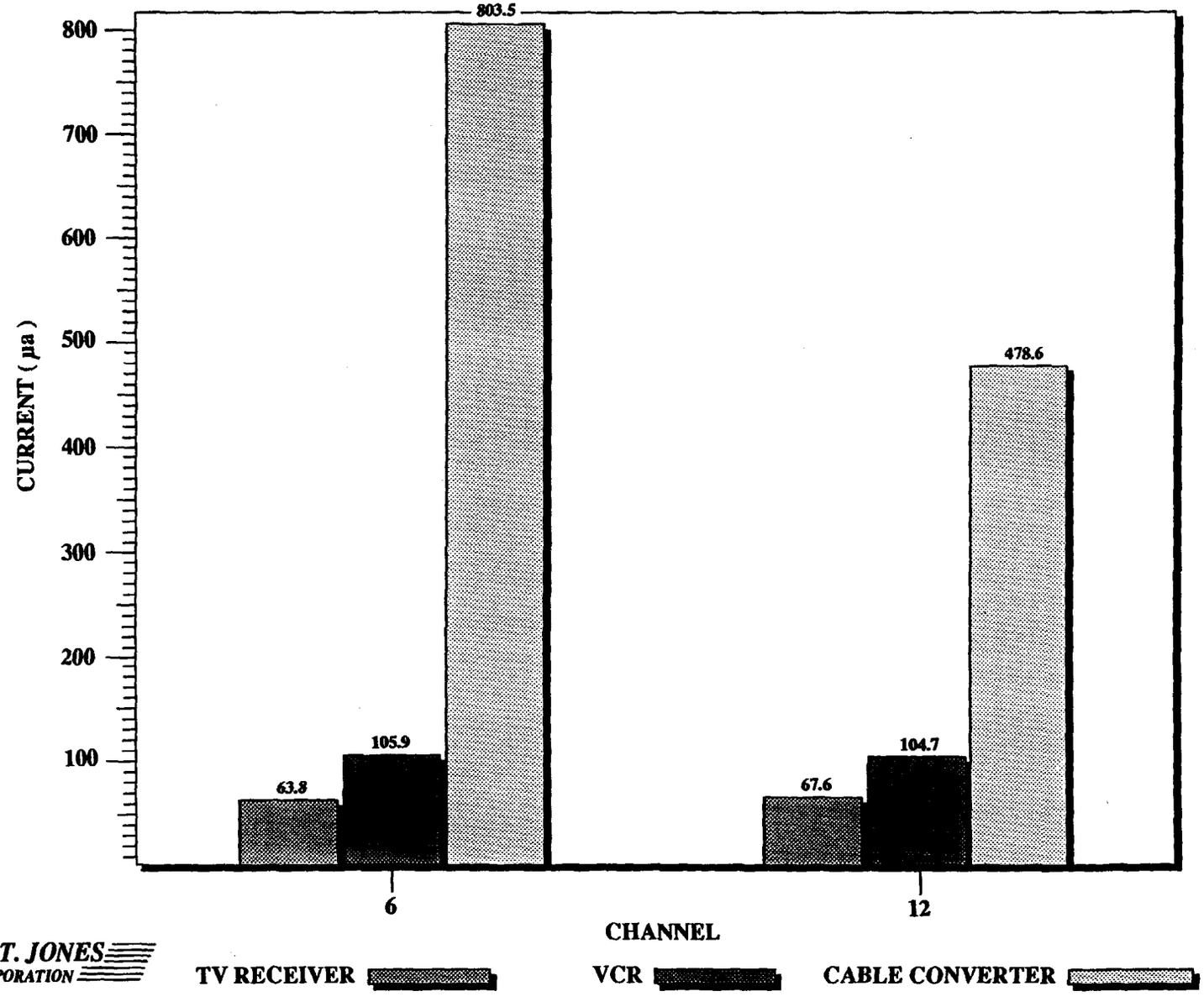

CARL T. JONES CORPORATION

Although there is no definitive data available at this time to quantify the magnitude of currents which might be present on the AC power cables and coaxial input cable shield in the consumer household, preliminary laboratory tests indicate that the currents required to create DPU interference in television receivers and VCR's can be created when the cables are subjected to relatively low ambient field strengths. Further study in this area may show that susceptibility to conducted currents may be a primary DPU ingress mode in many receivers, particularly at lower VHF frequencies.

4.0 Receiver Performance

4.0 Receiver Performance

4.1 Introduction

This Section of the report defines test methodologies and procedures for measuring certain receiver performance characteristics in modern consumer receiving equipment and presents test results on a sample population of 35 television receivers, 8 VCR's, and 13 cable converters. The eight receiver performance characteristics, which are addressed herein, relate directly to the interface between the cable delivery system and the consumer receiving device. Specifically, test methodologies, procedures, and results are presented for the following receiver performance categories:

- **Re-radiation of Cable Signals**
- **Local Oscillator Leakage and Backfeed**
- **A/B Switch Isolation**
- **DPU Backfeed**
- **VCR Through-Loss**
- **Adjacent Channel Rejection**
- **Image Rejection**
- **Tuner Overload Performance**

The first four performance categories listed above are related to potential interference to other cable subscriber equipment or other electronic devices. The last four performance categories relate to acceptable cable service.

Presented in Section 4.2 is a discussion of the test rationale and assumptions used in the development of the receiver performance test procedures. Section 4.3 presents the test methodology in each of the eight receiver performance categories. Detailed test procedures are presented in Section 4.4, and receiver performance test results are presented in Section 4.5.

4.2 Test Rationale and Assumptions

The complexity of conducting receiver performance tests on television receivers, VCR's, and cable converters can range from relatively straightforward to very complex. In designing the receiver performance test procedures contained here, an effort was made to develop procedures which were easily implemented and repeatable, and which place controls on the number and range of variables for a

given performance category. A discussion of the rationale and assumptions used in developing the key elements of the receiver performance test procedures is presented in the following paragraphs.

4.2.1 Test Channels

Four standard test channels were selected to represent receiver performance over the range of cable channels between 54 MHz and 550 MHz. The selected standard test channels are:

Cable Channel	Frequency
3	60 - 66 MHz
12	204 - 210 MHz
53	396 - 402 MHz
74	522 - 528 MHz

Receiver performance tests are performed on the channels listed above with the exception of two performance categories: Re-radiation of Cable Signals and DPU Backfeed. With regard to re-radiation of cable signals, the aeronautical frequency bands (118 - 137 MHz and 225 - 400 MHz) represent the greatest potential for interference from radiated cable signals and, therefore, channels falling within these frequency bands were selected for this test. Tests for re-radiation of cable signals are performed on the following channels:

Cable Channel	Frequency
15	126 - 132 MHz
25	228 - 234 MHz
37	300 - 306 MHz
53	396 - 402 MHz

DPU backfeed measurements are performed on the same channels which were selected for DPU susceptibility testing of television receivers, VCR's, and cable converters as described in Section 3.0. The DPU backfeed test channels are as follows:

Channel	Frequency
Cable Channel 6	82 - 88 MHz
Cable Channel 12	204 - 210 MHz
Cable Channel 78	546 - 552 MHz
Broadcast Channel 59	740 - 746 MHz

4.2.2 Measurement Test Point Location

Objective tests are performed in the test procedures described herein and, therefore, access to an output test point location is required in each performance category with the exception of Re-radiation of Cable Signals. A review of the test requirements indicates that certain measurements can be performed at the RF input and/or output port of the Equipment Under Test (EUT). Other tests require access to the baseband video signal.

Tests which can be performed at the RF input and/or output ports of the EUT include: local oscillator leakage and backfeed, VCR through-loss, DPU backfeed, and certain A/B switch isolation tests. Tests which require access to the baseband video signal include: image and adjacent channel rejection, tuner overload, and the remainder of the A/B switch isolation tests.

For receivers which do not have a baseband video output port (most television receivers and cable converters), a suitable test point location must be identified. Since cable converters have an RF output port, a high quality demodulator can be used to produce the baseband video signal. Television receivers have no RF output port and, therefore, a measurement test point must be located within the video electronics to bring the video signal to the exterior of the receiver chassis. The test probe used in this process must have impedance characteristics which do not adversely affect the video signal. Since only relative measurements will be performed at the video baseband measurement test point location, knowledge of the circuit impedance at the measurement point location is not required. Because of the difference in ground potential which may exist within the video electronics, an isolation transformer must be used on all receivers which are modified with baseband video probes.

4.2.3 Desired and Undesired Signal Level and Modulation

The selected test channel is defined as the "desired" channel. In order to ensure that the AGC and AFC circuits within the receiver are functioning under normal conditions, the desired video carrier is modulated with a standard 0 IRE or 10 IRE flat field. The level of the video carrier is adjusted as defined in the detailed test procedures for each tuner performance category. The measurement of the desired video carrier level is referenced to the peak sync tip of the modulated carrier. The aural carrier on the desired channel is unmodulated and adjusted to a level 10 dB below the video carrier level.

Signals on other channels are input to the EUT to simulate other active channels delivered by the cable system. These signals are unmodulated carriers. The number, level, and frequency of the unmodulated carriers is dependent on the specific receiver performance characteristic under test. The level of each unmodulated carrier is referenced to the modulated video carrier level of the desired signal.

Any signal which is produced within the receiver, due to the presence of one or more other carriers at the receiver input or due to inadequate A/B switch isolation, and which falls within the video passband of the desired channel, is defined as an "undesired" or "interfering" signal.

4.2.4 Desired to Undesired Signal Ratio and Signal Substitution Method

It is common practice to measure and report certain types of interfering signal levels, in terms of a ratio, referenced to the desired video carrier level. This ratio is sometimes referred to as the carrier to interference ratio (C/I) or the desired to undesired signal ratio (D/U). In the test procedures for receiver performance, the term "D/U signal ratio" is used to describe the relative interfering signal level for the image rejection, adjacent channel rejection, and tuner overload performance categories.

It is desirable to determine the D/U ratio at the input to the EUT (cable delivery system interface) in order to take advantage of subjective data referenced to this location, and to allow direct comparison of receiver performance and cable delivery system performance at the same (interface) location. This can be accomplished through the use of a calibrated reference signal which is input to the EUT along with the desired signal. The calibrated reference signal is used as a signal substitute to reference interfering signal levels, as measured in the video baseband, to an equivalent D/U ratio referenced to the input of the EUT.

For example, assume that a video measurement set, having spectral noise display capability, is connected to the baseband test point location of a television receiver. A desired video carrier is input to the receiver and adjusted to a level of 0 dBmV and modulated with a 10 IRE flat field. With no interfering signals present, the spectral display (averaging mode) on the video measurement set will show a relatively flat noise spectrum across the 4 MHz video passband.

Now, an unmodulated video carrier on the image frequency (15 channels above the desired channel) is combined with the desired carrier at the input to the receiver. The unmodulated image video carrier is adjusted to a level 10 dB above the desired video carrier level (+10 dBmV). A line spectrum will appear in the

baseband spectral display (image interfering signal) as a result of the newly added image carrier. The frequency of the line spectrum in the baseband video display, for conventional tuners, will be 1.5 MHz.

If the image carrier is removed from the input of the receiver and a calibrated reference signal is combined with the desired input signal at a frequency 1.5 MHz above the desired video carrier, a similar interfering signal will appear in the baseband spectral display. The input level of the reference signal can be adjusted until the level of the interfering signal, as observed in the baseband spectral display, is equal to the level observed when the image carrier was present. At this point, the interfering signal resulting from the image carrier has been directly replaced by an equivalent in-band interfering signal (signal substitute). By measuring the level of the reference signal at the receiver input port, an equivalent D/U signal ratio is determined for image interference referenced to the input of the receiver.

In this example, if the reference input signal (RF) were found to be -60 dBmV, then it can be stated that the equivalent in-band D/U signal ratio is 60 dB (0 dBmV - (-60 dBmV)). Image rejection for this receiver is calculated to be 70 dB (10 dBmV - (-60 dBmV)).

Notice that in the signal substitution measurement procedure, only relative values are important in the baseband measurement. Absolute measurements are only made at the input to the receiver where the impedance is known. Further, any noise introduced by the receiver or the measurement set is present in both the true interfering signal and the substitute signal and, therefore, is negated by the signal substitute measurement technique. The signal substitute technique is used in the measurement of image and adjacent channel rejection, tuner overload performance, and certain A/B switch isolation tests.

4.3 Test Methodology

This section addresses the methodology to perform the receiver performance tests in the eight performance categories. The descriptions herein provide a discussion of parameters to be measured, the recommended test instrumentation to perform each test, and the general procedures which will be followed. Detailed test procedures are contained in Section 4.4.

4.3.1 Re-radiation of Cable Signals

The FCC regulates signal radiation (leakage) from a cable delivery system under the technical standards of Part 76 of the FCC's Rules and Regulations. Cable operators are required, under this regulation, to maintain leakage throughout the

delivery system at levels below the maximum allowable levels as delineated in the Rules. The test described here is designed to measure cable signal leakage from a television receiver, VCR, or cable converter when connected to a cable delivery system.

The test is performed on an FCC-approved, three-meter range where accurate and repeatable results are attainable. The EUT is placed on a rotatable non-metallic table, and the RF input is connected to a TV signal generator (video baseband generator and agile channel modulator). It is important to use a high quality, double shielded coaxial cable for this connection in order that coaxial cable leakage is not a contributor to the measured emission level.

A horizontally polarized tuned dipole antenna, spectrum analyzer, preamplifier, and calibrated signal source are used to measure the level of the radiated emission from the EUT. Block diagrams of the test and EUT configurations are contained in Figures 4.1 and 4.2.

For this test, the input level of the selected test channel video carrier is adjusted to +15 dBmV, and the video carrier is modulated with a 0 IRE or 10 IRE flat field. Radiated emissions measurements are made only on the video carrier frequency of the selected test channel. At each test frequency, the radiated emission is maximized by rotating the EUT through a 360 degree arc and raising and lowering the receive antenna between 1 and 4 meters above the ground plane.

The test is performed with the EUT powered and then repeated with power to the EUT turned off. If the EUT is equipped with an A/B switch at the RF input, a second test is performed with the unused port selected, i.e., if the input cable is connected to port A, port B is selected on the EUT. If the EUT is furnished with interconnecting cables, the radiated emissions are measured with the cables attached in a normal configuration.

4.3.2 Local Oscillator Leakage and Backfeed

The purpose of this test is to measure the level of the local oscillator signal and other spurious signals which emanate from the EUT and are conducted back toward the cable delivery system via the RF input coaxial cable. The equipment configuration for the local oscillator and backfeed measurement is shown in Figure 4.3.

The television signal generator consists of an agile channel modulator and baseband signal generator. This generator provides the desired modulated video carrier and unmodulated aural carrier. A directional coupler, preamplifier, and spectrum analyzer are used to measure the level of the local oscillator and other

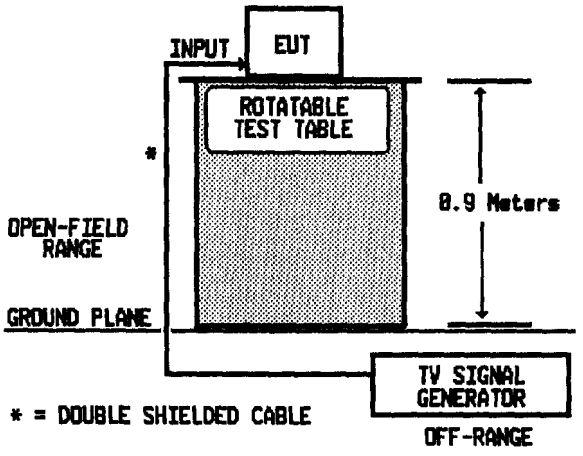

Figure 4.1 Re-radiation of Cable Signals EUT Configuration

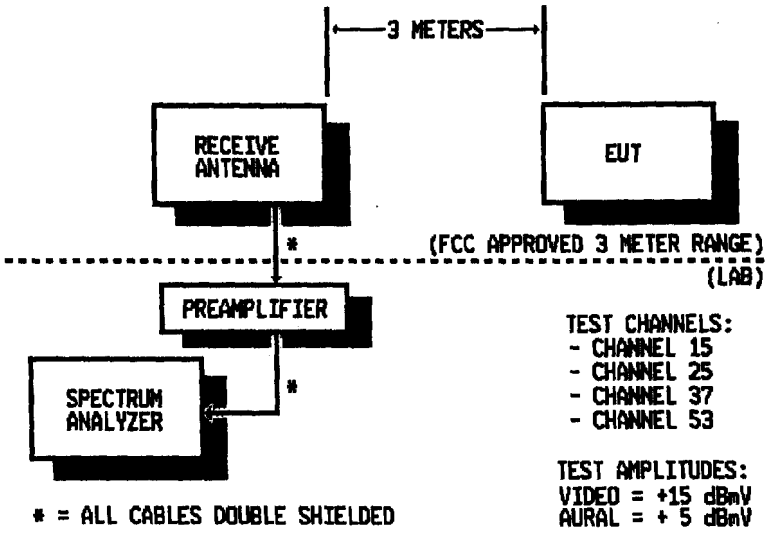

Figure 4.2 Re-radiation of Cable Signals Test Equipment Configuration and Test Parameters

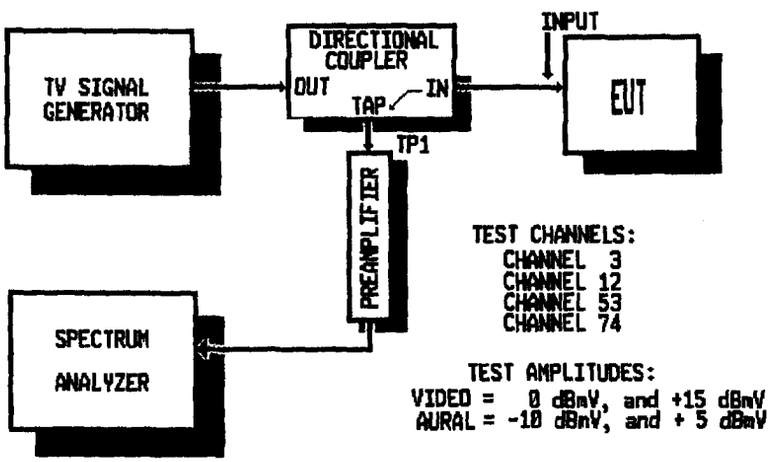

Figure 4.3 Local Oscillator and Backfeed Test Equipment Configuration and Test Parameters

spurious signals. Since this is an absolute measurement of the voltage appearing at the input connector of the EUT, a complete calibration must be performed over the entire test band prior to commencing the test.

The test procedure is relatively straightforward. The test generator and EUT are tuned to the desired test channel. The spectrum analyzer is adjusted to display the local oscillator frequency of the test channel. The amplitude of the modulated video carrier is adjusted for +15 dBmV at the input to the EUT. The aural carrier is unmodulated and adjusted for a level 10 dB below the visual carrier. The amplitude of the local oscillator is measured on the spectrum analyzer. The test is repeated for a visual carrier level of 0 dBmV.

"Backfeed" is generally defined as any spurious signal emanating from the tuner back toward the cable delivery system. For this test, the spectrum is scanned, using the spectrum analyzer, in 100 MHz increments to a maximum frequency of 600 MHz. Any spurious emissions identified in the scanning process which exceed -35 dBmV are measured and recorded.

4.3.3 A/B Switch Isolation

Devices which have two selectable RF input ports are to be tested for isolation between the non-selected input port and the selected input port (A to B and B to A) and between the non-selected input port and the output port (A to C and B to C). Figure 4.4 shows the switch configuration and lists the isolation tests to be performed. In addition, the A/B switch internal to a VCR will be tested for isolation between the input and output port when the VCR is operating in the "VCR Play" mode. Figure 4.5 shows the switch configuration for the VCR internal switch isolation test.

4.3.3.1 Non-Selected to Selected Input Port Isolation

Figure 4.6 shows the test configuration for the non-selected to selected input port (A to B and B to A) isolation test. In this measurement procedure, an unmodulated (CW) signal is input at the non-selected input port (port A) of the EUT. The resultant signal level is measured at the selected input port (port B) using a spectrum analyzer. The ratio of the input level at port A to the measured output level at port B is the isolation of the switch (recorded in dB). The test is repeated with port A as the selected port and port B as the non-selected port. The test is repeated with power to the EUT turned off. If the non-selected input port is not internally terminated, a 75 Ohm terminator is used at the input to this port.

4.3.2 Non-Selected Input to Output Port Isolation

Figure 4.7 shows the test configuration for performing isolation measurements between the non-selected input port (port B) and the output port (port C) with a desired television signal input on the selected port A. Since it is not practical to gain direct access to port C, the measurement is performed at the baseband test point location using the signal substitution method described in Section 4.2.4.

In this procedure, a desired television signal is input at the selected input port A. The video carrier of the desired signal is modulated with a 0 IRE or 10 IRE flat field modulation and adjusted to a level of +0 dBmV. The desired aural carrier is unmodulated and adjusted to a level of -10 dBmV. An "undesired" CW signal is input at the non-selected port (port B) at a frequency between the video and aural carriers (approximately 2.55 MHz above the video carrier). This signal is adjusted to a level of +30 dBmV. Using a television measurement set with spectrum noise capability or a spectrum analyzer, the baseband spectrum is monitored at the

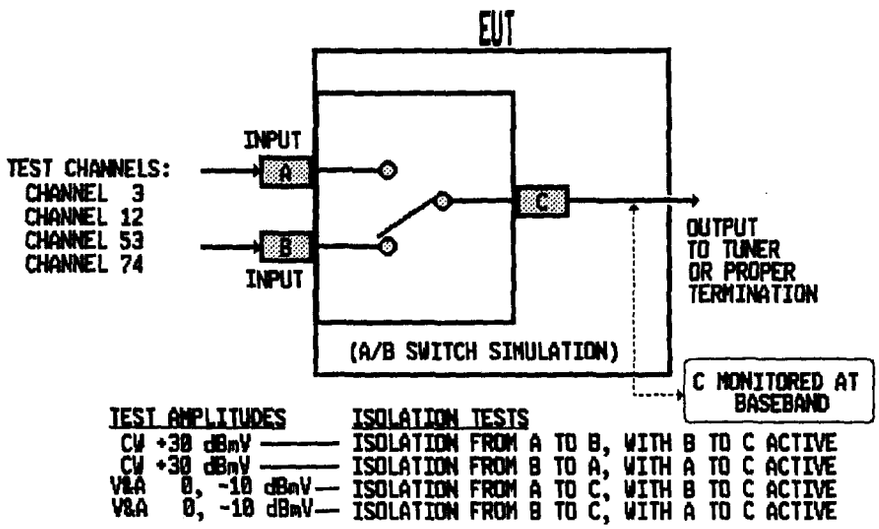

Figure 4.4 Switch Configuration and Isolation Test Parameters for Devices Having Two Selectable RF Input Ports

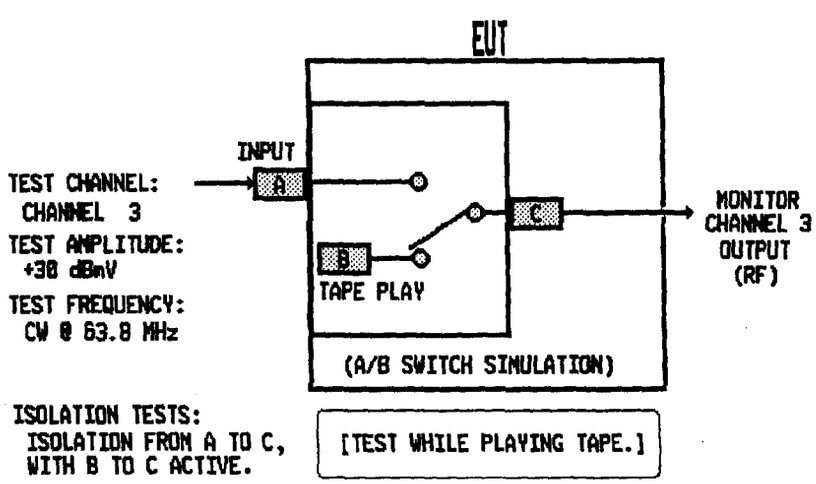

Figure 4.5 VCR Internal Switch Configuration and Isolation Test Parameters

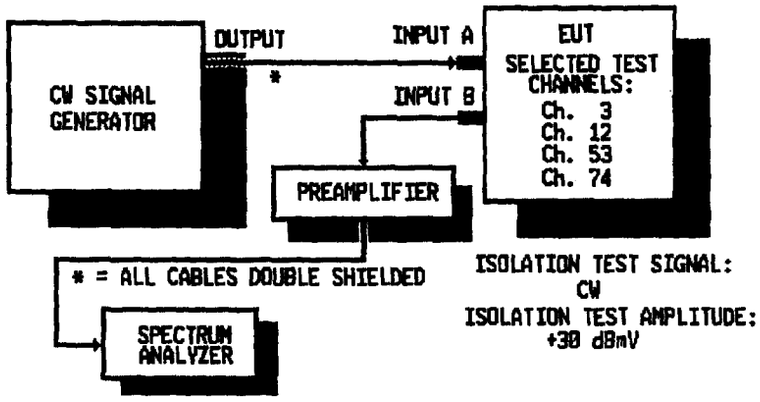

Figure 4.6 Non-selected to Selected Input Port A/B Switch Isolation Test Configuration

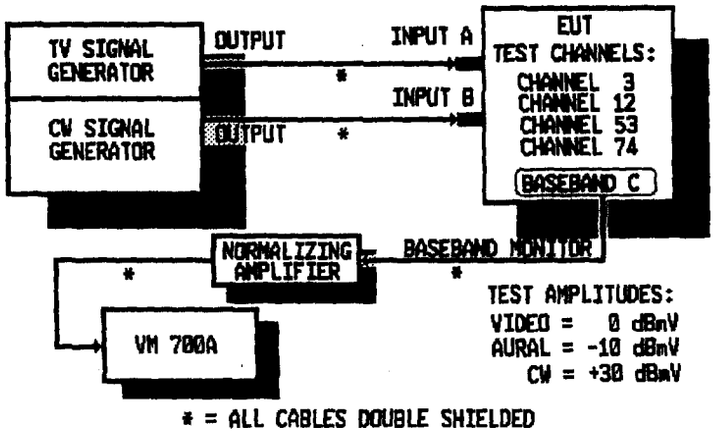

Figure 4.7 Non-selected Input to Output Port Switch Isolation Test Configuration

video baseband test point location. If the switch has less than 90 dB of isolation at the test frequency, the undesired signal will appear in the baseband display as a line spectrum at a frequency of 2.55 MHz.

After the level of the signal in the baseband display is recorded, the undesired signal is removed from the non-selected port and combined with the desired signal into the selected port (reduced by 60 dB). The new signal is the reference signal used in the signal substitution method. The reference signal is adjusted so that the resultant baseband signal level exactly equals the previously noted level when the signal was present at the non-selected port. The switch isolation is the ratio of the undesired signal level to the reference signal level. For example, if the final measured reference signal level is -52 dBmV, then the switch isolation (non-selected input port to output port) is 82 dB (30 dBmV - (-52 dBmV)). The test is repeated with port B selected on the EUT. Note: If the non-selected input port is not internally terminated, a 75 Ohm terminator is used at the input to this port.

4.3.3.3 VCR Input to Output Port Internal Switch Isolation

This test is designed to measure isolation between the input and output ports of a VCR internal switch when the VCR is operating in the "VCR Play" mode. In this mode, a cable television signal at the input port, on channel 3 or 4 (dependent on the selected VCR output channel), may interfere with the channel 3 or 4 VCR output to the television receiver due to inadequate internal switch isolation. Figure 4.8 shows the test configuration for this isolation measurement.

The VCR output channel is selected to channel 3, and a CW signal is input at the RF input connector at a frequency between the aural and visual carriers of channel 3 (approximately 2.55 MHz above the visual carrier). The CW signal is adjusted for an amplitude of +30 dBmV. A tape is inserted in the VCR containing a 0 IRE or 10 IRE flat field picture. The level of the CW signal is measured at the output of the VCR using a spectrum analyzer. The isolation of the VCR internal switch is the ratio of the input CW signal level to the measured output level (recorded in dB). Because the test frequency was chosen between the aural and visual carriers, at a frequency where video energy is minimal, dynamic range for this measurement should be 90 dB or better.

4.3.4 DPU Backfeed

Direct Pickup interference (DPU) is a form of co-channel interference which occurs as a result of the susceptibility of a receiver to ambient fields having in-band frequency components. The primary sources of DPU, in a receiver connected to a cable delivery system, are over-the-air television broadcast signals and signals

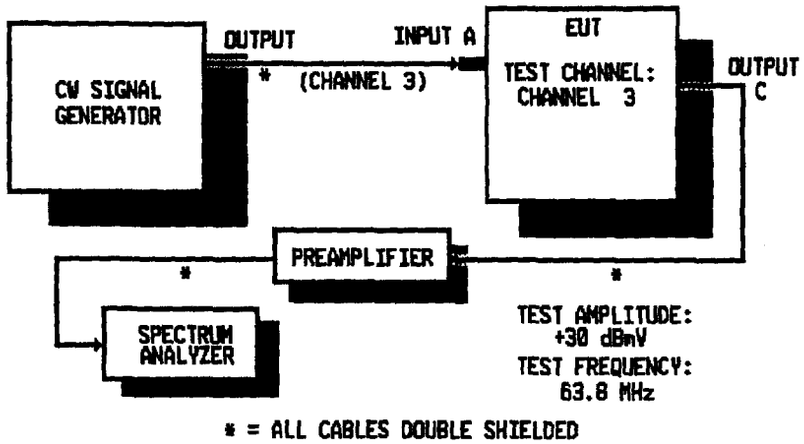

Figure 4.8 VCR Input to Output Port Internal Switch Isolation Test Configuration

from other fixed and mobile communications facilities operating in the same frequency spectrum as the cable delivery system. If a receiver connected to a cable delivery system is susceptible to DPU, the resultant interfering signal may be conducted back toward the cable delivery system and interfere with other subscribers' receivers connected to the system. This interference mechanism is similar to the local oscillator and backfeed mechanism discussed in Section 4.3.2.

For this test, the EUT is placed on a rotatable nonconducting table within a calibrated enclosure as shown in Figure 4.9. The enclosure is pre-calibrated for field uniformity over the volume of the EUT and for absolute field strength at each test channel. A full description of the requirements for a calibrated DPU test enclosure is contained in Section 3.3 of this report.

The DPU Backfeed test equipment configuration is shown in Figure 4.10. A desired television signal is input to the EUT via the TV signal generator (agile channel modulator and baseband generator). The desired video carrier is modulated with a 0 IRE or 10 IRE flat field modulation and set to a level of +15 dBmV at the input to the EUT. The aural carrier is unmodulated and adjusted to

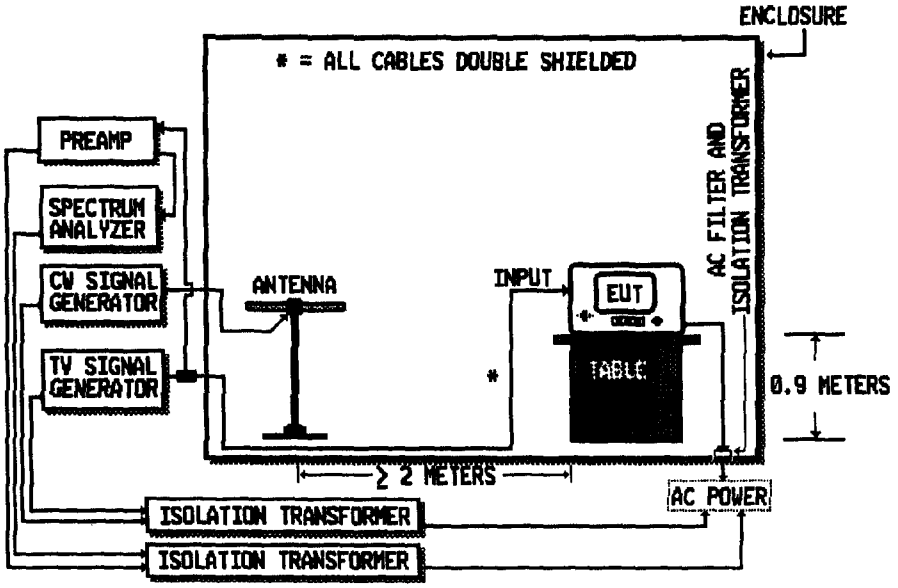

Figure 4.9 DPU Backfeed Test System Configuration

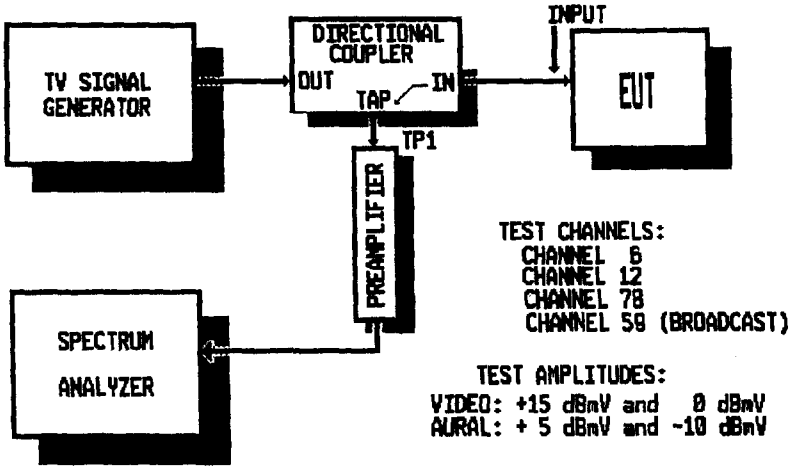

Figure 4.10 DPU Backfeed Test Equipment Configuration and Test Parameters

a level 10 dB below the video carrier level. The EUT is irradiated with a CW ambient field strength at a frequency 2.55 MHz above the desired video carrier frequency. The level of the ambient field strength is adjusted to 100 mV/m at the EUT. The EUT is rotated through an arc of 360° to maximize the DPU backfeed signal level. A directional coupler, preamplifier, and spectrum analyzer are used to measure the level of the DPU backfeed signal. The test is repeated for each of the four standard test channels and for a desired visual carrier level of 0 dBmV.

4.3.5 VCR Through-Loss

VCR through-loss is the ratio of the input RF signal level to the output RF signal level of a VCR when the VCR is operating in the through or TV mode (passing the RF signal to the next device in a cascade manner). The measurement is performed with a CW signal input to the VCR at a +10 dBmV level. The output is measured with a spectrum analyzer, and the ratio is the through-loss of the VCR recorded in dB. A block diagram of the VCR through-loss test equipment configuration is shown in Figure 4.11. The test is performed at four frequencies corresponding to the four standard test channels.

4.3.6 Adjacent Channel Rejection

Relatively high level adjacent channel signals are present at the input to a receiver which is connected to a cable delivery system. Inadequate adjacent channel rejection capability of the tuner can result in picture degradation due to adjacent channel interference. Those carriers which are closest in frequency to the desired channel present the greatest potential for interference. Because of this, adjacent channel rejection tests are performed for the following adjacent channel carriers: lower adjacent aural carrier, lower adjacent color subcarrier, and upper adjacent video carrier. In order to quantify the adjacent channel rejection for the three carriers listed above, objective tests are performed using the signal substitution method described in Section 4.2.4. A block diagram of the adjacent channel rejection test equipment configuration is shown in Figure 4.12.

The desired video carrier is modulated with a 0 IRE or 10 IRE flat field modulation. The visual carrier level is adjusted for +10 dBmV. The unmodulated aural carrier is set 10 dB below the visual carrier. A CW signal is combined with the desired channel at the input of the EUT to simulate the adjacent channel carrier under test. The CW signal is set for a level which represents the maximum allowable or, in the case of the lower adjacent channel color subcarrier, the maximum expected level. Since the FCC Rules allow a maximum 3 dB difference in amplitude between adjacent channels, the maximum upper adjacent video carrier level is +13 dBmV for this test. The lower adjacent aural carrier can

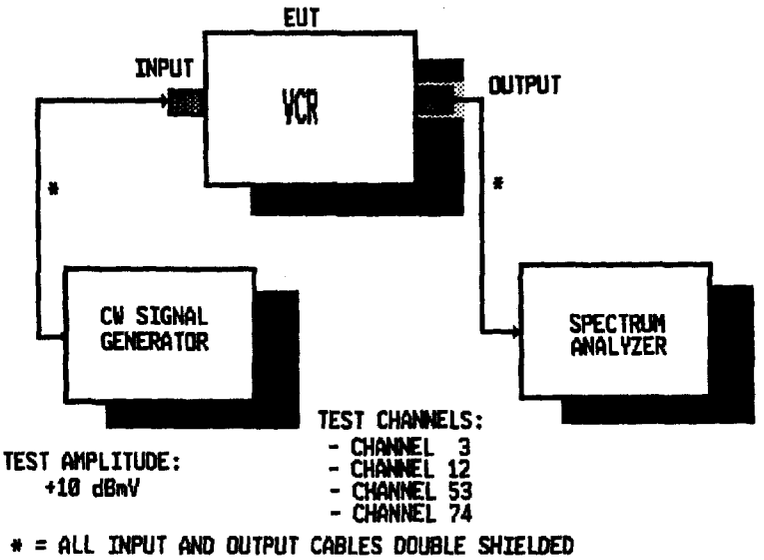

Figure 4.11 VCR Through-Loss Test Equipment Configuration and Test Parameters

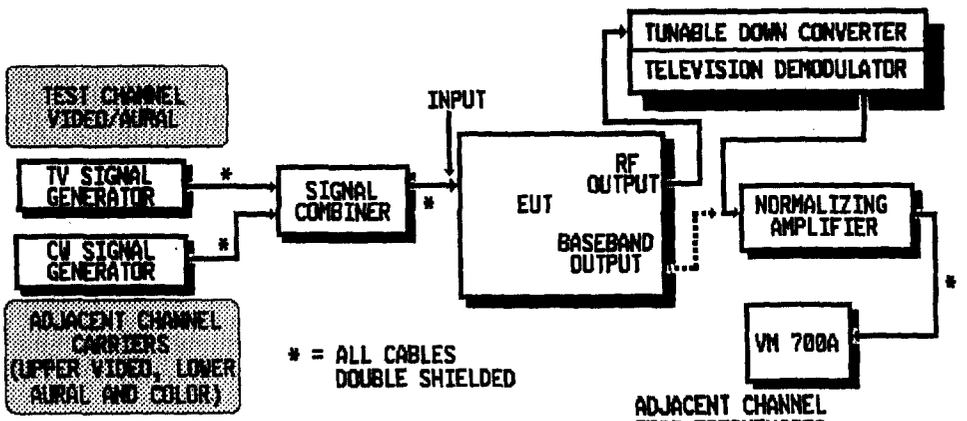

TEST AMPLITUDES

UV =	+13 dBmV
LA =	+ 3 dBmV
LC =	- 2 dBmV
DV =	+10 dBmV
DA =	0 dBmV

TEST CHANNELS	ADJACENT CHANNEL TEST FREQUENCIES		
	UPPER VIDEO	LOWER AURAL	LOWER COLOR
CHANNEL 3	67.25 MHz	59.75 MHz	58.83 MHz
CHANNEL 12	211.25 MHz	203.75 MHz	202.83 MHz
CHANNEL 53	403.25 MHz	395.75 MHz	394.83 MHz
CHANNEL 74	529.25 MHz	521.75 MHz	520.83 MHz

Figure 4.12 Adjacent Channel Rejection Test Equipment Configuration and Test Parameters

be within 10 dB of the lower adjacent video carrier, which can be 3 dB greater than the desired video carrier. The maximum lower adjacent aural carrier level is, therefore, +3 dBmV. The maximum expected lower adjacent color subcarrier is -2 dBmV.

Using a television measurement set having noise spectrum capability (or spectrum analyzer), the resultant in-band interfering signal is monitored at the video baseband measurement test point location. The resultant interfering signal will appear as a line spectrum in the baseband spectral display (averaging mode). The frequency of the baseband line spectrum is 1.5 MHz when a lower adjacent aural carrier is present, 2.41 MHz when the lower adjacent color subcarrier is present, and 3 MHz when the upper adjacent video carrier is present. If no signal is present, the resultant in-band interfering signal is below the noise floor of the EUT.

Using the signal substitution method, the adjacent channel carrier is removed and a reference signal input at the corresponding in-band RF frequency. The reference signal level is adjusted so that the resultant level of the line spectrum in the baseband spectral display is equal to the level observed when the adjacent channel carrier was present. The reference signal level is measured at the input of the EUT. The adjacent channel rejection is the ratio of the adjacent channel carrier level to the measured reference signal level.

For example, if the measured reference signal level for a lower adjacent aural carrier test is -58 dBmV, then the adjacent channel rejection is 61 dB (+3 dBmV - (-58 dBmV)). Further, the equivalent in-band desired to undesired signal ratio (carrier to interference ratio) is 68 dB (10 dBmV - (-58 dBmV)). The test is repeated for each of the three adjacent channel carriers and all four desired test channels.

4.3.7 Image Rejection

An image frequency is converted to an in-band IF signal at the output of the mixer, in a similar manner to the desired channel. For conventional single conversion tuners, the image video carrier falls 15 channels above the desired video carrier. Inadequate image filter rejection will result in picture degradation due to in-band image interference. A receiver connected to a cable delivery system will have an image carrier present for most channels. The level of the image carrier can be significantly higher than the desired video carrier. The FCC requires that visual carriers at the receiver input vary no more than 10 dB, plus 1 dB for each 100 MHz of bandwidth above 300 MHz. In a 550 MHz cable delivery system, the variation between carriers can be as much as 13 dB.

In order to quantify the image rejection characteristics of the receiver under test, an objective test is performed using the signal substitution method. The test procedure parallels the adjacent channel test procedure described in the previous Section.

A block diagram of the image rejection test equipment configuration is shown in Figure 4.13. The desired signal consists of a video carrier modulated with the standard 0 IRE or 10 IRE flat field modulation. For this test, the desired video carrier level is set to 0 dBmV. The desired aural carrier is unmodulated and input at a level 10 dB below the video carrier (-10 dBmV). A CW signal is used to simulate the image video carrier. The frequency of the image carrier is 90 MHz above the desired video carrier frequency. The image carrier level is adjusted to a level 13 dB above the desired video carrier level (+13 dBmV), representing the maximum allowable variation for a 550 MHz cable delivery system.

A television measurement set having noise spectrum capability is used to monitor the baseband spectrum. The resultant in-band image interfering signal will appear in the baseband spectral display as a line spectrum at a frequency of 1.5 MHz. Using the signal substitution method, image rejection is measured in the identical manner to adjacent channel rejection described in the preceding Section and in the example of Section 4.2.4. This procedure yields the image rejection (recorded in dB) and the equivalent in-band D/U signal ratio for the worst case amplitude variation between the desired and image video carriers. The image rejection test is performed on all four standard test channels.

4.3.8 Tuner Overload

A continuous spectrum of high level signals is present at the input to the consumer receiving device when the device is connected to a cable delivery system. The number and level of video carriers present at the input of the receiver, combined with the nonlinear characteristics of the receiver's RF amplifier(s), may result in an unacceptable level of distortion in the video picture (tuner overload). The most pronounced of the distortion products are referred to as Composite Triple Beat (CTB) and Composite Second Order (CSO). The CTB products fall on the video carrier of the desired channel. The CSO products fall displaced in frequency from the desired video carrier by ±.75 MHz or ±1.25 MHz for a Standard or IRC channelization plan and on the video carrier for an HRC channelization plan (the CSO products cannot be distinguished from the CTB products in an HRC system). Other distortion products, such as intermodulation and cross modulation, may also be created within the tuner; however, it is anticipated that the level of these products will be less than the levels of CTB and CSO for systems having a large number of channels.

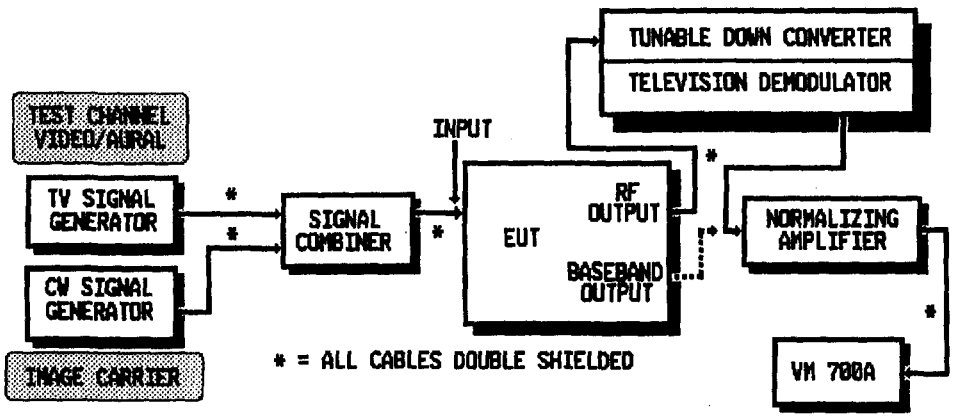

TEST CHANNELS:	IMAGE FREQUENCIES (CW):	TEST AMPLITUDES:
- CHANNEL 3	151.25 MHz	VIDEO = 0 dBmV
- CHANNEL 12	295.25 MHz	AURAL = -10 dBmV
- CHANNEL 53	487.25 MHz	IMAGE = +13 dBmV
- CHANNEL 74	613.25 MHz	

Figure 4.13 Image Rejection Test Equipment Configuration and Test Parameters

In order to quantify tuner overload performance, an objective test is performed which relies on the signal substitution method described previously. The test procedure requires the use of a special multi-channel generator (Matrix generator) to simulate the signals which are delivered by the cable system.

A block diagram of the tuner overload test equipment configuration is shown in Figure 4.14. A desired signal is input through a combiner to the EUT. The desired channel video carrier is modulated with a 0 IRE or 10 IRE flat field modulation and adjusted to a level of +15 dBmV. The desired aural carrier is unmodulated and set to a level 10 dB below the desired video carrier level (+5 dBmV).

Because the CTB products fall on the desired carrier frequency, and the desired channel must be active in order to achieve normal operation of the tuner, it is necessary to frequency offset the desired channel in order to resolve the CTB products. For small offsets, the tuner AFC will easily "pull" to the offset frequency. It is recommended that the tuner overload tests be performed with the desired channel offset downward by at least 80 kHz.

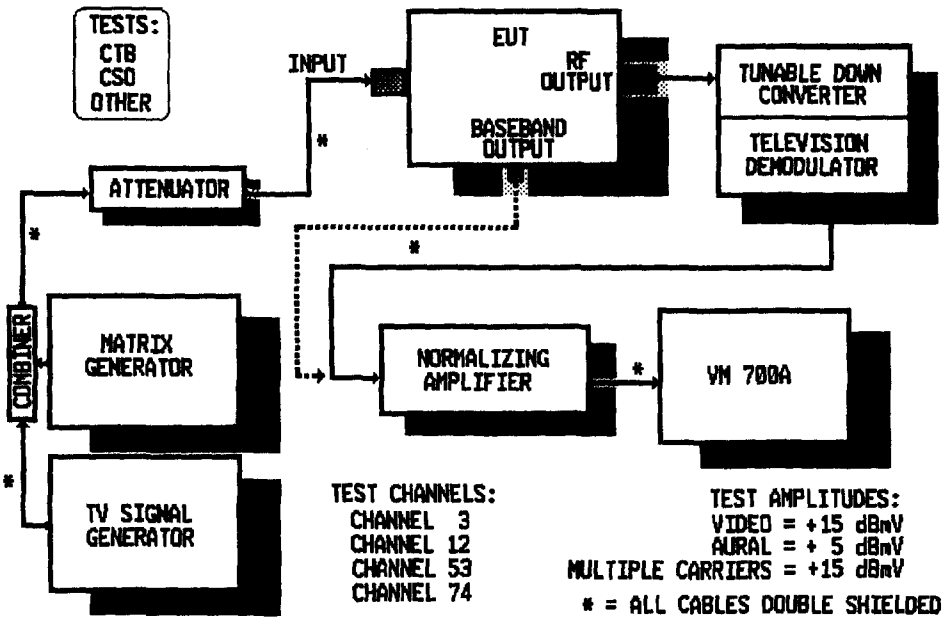

Figure 4.14 Tuner Overload Test Equipment Configuration and Test Parameters

Multiple CW signals are combined with the desired video and aural carriers and input to the EUT through a combiner. The CW signals represent the other video carriers delivered by the cable system between 54 MHz and 550 MHz. The desired video carrier and the image frequency video carrier (15 channels above the desired video carrier) are deactivated on the Matrix generator. The levels of all remaining CW carriers are set to +15 dBmV at the input to the EUT.

A television measurement set having noise spectrum capability is connected to the baseband video test point location through a normalizing amplifier. The resultant distortion products will appear as spectral lines in the display of the baseband spectrum (averaging mode). The level and frequency of each spectral line is recorded, and the Matrix generator is then turned off. Using the signal substitution method, an in-band reference signal is sequentially input to the EUT at the RF frequencies which correspond to the observed baseband spectral lines. The reference signal RF frequency is equal to the offset video carrier frequency plus the frequency of the baseband distortion product. At each frequency, the reference signal level is adjusted until the substitute signal, as observed in the baseband display, is equal to the level which was present when the Matrix

generator was active. The process is repeated for each of the distortion products observed. This measurement process results in an equivalent in-band D/U signal ratio (recorded in dB) for each distortion product.

4.4 Detailed Test Procedures

This section provides detailed test procedures for the eight tuner performance categories.

4.4.1 General Test Conditions

For each of the tuner performance tests described below, the EUT and test equipment are properly impedance matched. All cable losses, attenuator losses, amplifier gains, combiner losses, and directional coupler losses (through-loss and tap outputs) are measured and recorded for each test frequency. When required, additional amplification and filtering may be used. All calibrated signal inputs to the EUT are referenced to generator settings or generator output attenuator settings. All measurement receivers and signal generators are verified for accuracy using a NIST traceable calibrated power meter.

The measurement of the level of the desired modulated video carrier will be performed with a spectrum analyzer processing bandwidth of 300 kHz or greater and no video filtering. Narrower processing bandwidths and video filtering or averaging may be used when measuring unmodulated (CW) carriers and/or resultant unmodulated baseband interfering signals.

4.4.2 Re-Radiation of Cable Signals

4.4.2.1 Test Conditions

Test Channels: 15, 25, 37, and 53
Desired Video Carrier Level: +15 dBmV
Desired Aural Carrier Level: +5 dBmV
Video Modulation: 0 IRE or 10 IRE Flat Field
Test Range: FCC Approved, Three-Meter, Open-Field Range

4.4.2.2 Measurement Procedures

STEP #1 Place the EUT on a non-conductive, rotatable turntable elevated 0.9 meters above the ground plane. See Figures 4.1 and 4.2.

STEP #2 Position the test generator off of the three-meter, open-field test range.

Note: Radiated emissions measurements must be made on the test generator and terminated coaxial input cable (no EUT present) to verify that emissions emanating from the generator and input cable are well below the strictest leakage requirement of 26 dBuV/m at 3 meters.

STEP #3 Connect the test generator output to the input of the EUT via a double shielded, 75Ω coaxial cable and adjust for the required level at the input to the EUT.

STEP #4 Apply power to the EUT and tune to the desired test channel. Center the spectrum analyzer display for the desired video carrier frequency. Adjust the horizontally polarized receive dipole to the appropriate length for the desired video carrier frequency.

STEP #5 While viewing the spectrum analyzer display, maximize the measured emission by rotating the EUT over a 360° arc and by raising and lowering the receive antenna between one and four meters above the ground plane. Record the maximum emission amplitude.

STEP #6 Repeat STEP #5 with the EUT turned off.

STEP #7 If the EUT contains an A/B switch, select the opposite (open) input port on the EUT and repeat STEPS 4 and 5.

STEP #8 Repeat STEPS 3 through 7 for each of the remaining three test channels.

4.4.3 Local Oscillator Leakage and Backfeed

4.4.3.1 Test Conditions

Test Channels: 3, 12, 53, and 74
Desired Video Carrier Level: 0 dBmV and +15 dBmV
Desired Aural Carrier Level: -10 dBmV and +5 dBmV
Video Carrier Modulation: 0 IRE or 10 IRE Flat Field
Aural Carrier Modulation: Unmodulated

4.4.3.2 Measurement Procedures

STEP #1 Configure the EUT and test equipment as shown in Figure 4.3, and adjust the desired video carrier level to +15 dBmV at the input to the EUT. Adjust the desired aural carrier level to +5 dBmV.

STEP #2 Apply power to the EUT and tune to the desired test channel. Center the spectrum analyzer display on the local oscillator frequency (see table below).

Test Channel	Local Oscillator Frequency
3	107 MHz
12	251 MHz
53	443 MHz
74	569 MHz

STEP #3 Measure the local oscillator signal level on the spectrum analyzer and record on the data sheet.

STEP #4 Repeat STEPS 2 and 3 for a video carrier input level of 0 dBmV and an aural carrier level of -10 dBmV.

STEP #5 The frequency band from 5 MHz to 600 MHz will be investigated for other spurious emissions by scanning the spectrum on the spectrum analyzer in 100 MHz segments and recording spurious conducted emissions exceeding -35 dBmV.

STEP #6 Repeat STEPS 2 through 5 for each test channel.

4.4.4 A/B Switch Isolation

Three separate switch isolation tests are performed in this category. For devices having two selectable input ports, isolation is measured between the selected and non-selected input ports and between the non-selected input port and the output port. The third switch isolation test will be performed on VCR's only. This test measures the isolation between the input and output port when the VCR is operating in the "VCR Play" mode (channel 3 only).

4.4.4.1 Non-Selected to Selected Input Port Isolation

Each EUT containing two selectable input ports will be tested for isolation between the non-selected and selected input ports (A to B and B to A). See Figure 4.4 and Figure 4.6.

4.4.4.1.1 Test Conditions

Test Channels: 3, 12, 53, and 74.
Test Signal Level: +30 dBmV
Test Signal Modulation: Unmodulated (CW)

Note: The input impedance of each EUT must be measured to determine if its non-selected input port is internally terminated. If the non-selected port is not internally terminated, install a 75 Ohm termination for this test.

4.4.4.1.2 Measurement Procedures

STEP #1 Configure the EUT and test equipment as shown in Figure 4.6.

STEP #2 Apply power to the EUT and select the desired test channel. Select the B input port on the EUT.

STEP #3 Set the CW generator to the video carrier frequency of the first test channel and adjust the level for +30 dBmV at the A input port (non-selected input port) of the EUT.

STEP #4 Center the spectrum analyzer display on the desired video carrier frequency and measure the level of the test signal at input port B. The measurement system (preamplifier and spectrum analyzer) must be capable of resolving a signal of -60 dBmV (75 Ohms).

STEP #5 Calculate the isolation by subtracting the measured value of the test signal at port B (in units of dBmV) from the +30 dBmV input level at port A.

STEP #6 Repeat STEP #2 through STEP #5 with the A input port selected on the EUT and the test signal generator connected to the B input port.

STEP #7 Repeat STEP #2 through STEP #6 for the remaining three test channels.

STEP #8 Repeat STEP #2 through STEP #7 with power to the EUT turned off.

4.4.4.2 Non-Selected Input Port to Output Port Isolation

Each EUT containing two selectable input ports will be tested for isolation between the non-selected input port and the output port (A to C and B to C). See Figure 4.4 and Figure 4.7. Note: If the non-selected input port is not internally terminated, install a 75 Ohm termination at the input port for this test.

4.4.4.2.1 Test Conditions

Desired Test Channels: 3, 12, 53, and 74
Test Signal Amplitudes (at the EUT RF input port):
- Desired Video Carrier: 0 dBmV
- Desired Aural Carrier: -10 dBmV
- Undesired CW Carrier: +30 dBmV

Modulation:
- Desired Video Carrier: 0 IRE or 10 IRE Flat Field
- Desired Aural Carrier: Unmodulated
- Undesired CW Carrier: Unmodulated

Undesired CW Carrier Frequencies:

Test Channel	Undesired Carrier Frequency
Channel 3	63.80 MHz
Channel 12	207.80 MHz
Channel 53	399.80 MHz
Channel 74	525.80 MHz

4.4.4.2.2 Initial Calibration

STEP #1 Configure the test system as shown in Figure 4.7.

STEP #2 Adjust the TV signal generator (desired channel) for the desired video and aural carrier levels and modulation as measured at input port A of the EUT. Record generator/attenuator settings for each test channel.

STEP #3 For each undesired test frequency, adjust the CW signal generator (undesired signal generator) to obtain a signal level of +30 dBmV at input port B. Record the generator output level for each of the four undesired test frequencies.

4.4.4.2.3 Measurement Procedures

STEP #1 Apply power to the EUT and select the first test channel. Select input port A on the EUT (A to C active).

STEP #2 Adjust the TV signal generator (desired channel) to the settings obtained in STEP #2 of the calibration procedure for the first test channel.

STEP #3 Adjust the CW signal generator for the undesired test frequency for the first test channel and the output setting obtained in STEP #3 of the calibration procedure.

STEP #4 Set up the VM 700A television measurement set to display the noise spectrum of Field 1, Line 16 (0 IRE flat field). [Note: Verify that the EUT baseband signal is normalized to 1 Volt (Peak).] Scan the noise spectral display of the VM 700A (averaging mode) for an in-band interfering signal at approximately 2.55 MHz in the baseband display. Record the magnitude of the interfering signal.

Note: If no interfering signal is present, the isolation of the switch is sufficient to attenuate the undesired signal below the noise floor of the EUT. In this circumstance, record the noise floor level and proceed to the next test channel (STEP #8).

STEP #5 Remove the undesired CW signal from the B input port and combine the signal with the desired signal at the A input port (reduce the undesired signal generator output level by 60 dB). This new input is the signal substitute reference signal. The reference signal produces a similar interfering signal in the baseband spectral display to that produced when the undesired signal was present at the B input port.

STEP #6 Adjust the reference signal generator output until the interfering baseband signal magnitude is equal to the magnitude recorded in STEP #4. Record the reference generator output level.

STEP #7 Calculate the isolation by subtracting the reference generator output level recorded in STEP #6 from the undesired signal generator output level recorded in STEP #3 of the Initial Calibration Procedure.

STEP #8 Repeat STEP #1 through STEP #7 for the three remaining test channels.

STEP #9 Repeat STEP #1 through STEP #8 with input port B selected (desired signal input at port B and the undesired signal input at port A).

4.4.4.3 <u>VCR Input to Output Port Internal Switch Isolation</u>

Each VCR is tested for isolation between the RF input port and the RF output port when the VCR is operating in the "VCR Play" mode. See Figure 4.5 and Figure 4.8.

4.4.4.3.1 Test Conditions

Desired Test Channel: 3
Undesired CW Carrier Amplitude: +30 dBmV
Undesired CW Carrier Frequency: 63.80 MHz
Undesired CW Carrier Modulation: Unmodulated
VCR Output Channel: 3
VCR Operating Mode: "VCR Play" Mode
Test Tape Video Modulation: 0 or 10 IRE Flat Field

4.4.4.3.2 Measurement Procedures

STEP #1 Configure the test system and EUT as shown in Figure 4.8. Select channel 3 as the output channel on the VCR.

STEP #2 Adjust the CW signal generator (undesired signal generator) for a level of +30 dBmV at the input to the VCR.

STEP #3 Insert the test tape in the VCR and activate the "VCR Play" mode. Check to insure that the EUT is in the VCR operating mode.

STEP #4 Center the spectrum analyzer display on the undesired CW carrier frequency (63.80 MHz). Measure the level of the CW signal. Note: If no interfering signal is present, the isolation of the internal switch is sufficient to attenuate the undesired signal below the noise floor of the VCR.

STEP #5 Calculate the internal switch isolation by subtracting the level measured in STEP #4 (in dBmV) from +30 dBmV.

4.4.5 DPU Backfeed

Performance of the DPU Backfeed test requires a calibrated DPU test enclosure. The test enclosure must have a field uniformity of ±4 dB over the volume of the EUT at each of the test frequencies and be calibrated for absolute field strength.

4.4.5.1 Test Conditions

Test Channels: 6, 12, 78, and 59 (broadcast)
Desired Video Carrier Level: 0 dBmV and +15 dBmV
Desired Aural Carrier Level: -10 dBmV and +5 dBmV
Undesired Ambient Field Level: 100 mV/m
Video Carrier Modulation: 0 IRE or 10 IRE Flat Field
Aural Carrier Modulation: Unmodulated
Undesired Signal Modulation: Unmodulated
Undesired Signal Frequencies:

Test Channel	Undesired Signal Frequency
6	85.80 MHz
12	207.80 MHz
78	549.80 MHz
59 (Broadcast)	743.80 MHz

4.4.5.2 Measurement Procedures

STEP #1 Configure the EUT and test equipment as shown in Figures 4.9 and 4.10. Apply power to the EUT and tune to the first test channel.

STEP #2 Set the TV signal generator to the first test channel and adjust the output level of the generator to produce a desired video carrier level to +15 dBmV at the input to the EUT. Adjust the desired aural carrier level to +5 dBmV.

STEP #3 Adjust the CW signal generator to produce an ambient field strength of 100 mV/m at the undesired signal frequency for the first test channel. Note: The DPU enclosure should be pre-calibrated so that the output level of the CW signal generator can be directly related to field strength at the EUT for each test channel.

STEP #4 Center the spectrum analyzer display on the undesired signal frequency.

STEP #5 Measure the DPU backfeed signal level on the spectrum analyzer and record on the data sheet.

STEP #6 Repeat STEPS 2 through 5 for a video carrier input level of 0 dBmV and an aural carrier level of -10 dBmV.

STEP #7 Repeat STEPS 1 through 6 for each of the three remaining test channels.

4.4.6 VCR Through-Loss

4.4.6.1 Test Conditions

Test Channels: 3, 12, 53, and 74.
Video Carrier level: +10 dBmV
Modulation: Unmodulated (CW)
EUT Operating Mode: RF Through Mode Selected (TV mode).

4.4.6.2 Measurement Procedures

STEP #1 Configure the EUT and test equipment as shown in Figure 4.11. Apply power to the EUT and select the RF through mode (TV mode) of operation.

STEP #2 Adjust the CW signal generator to the video carrier frequency of the desired test channel and adjust the level of the unmodulated carrier to +10 dBmV at the input to the EUT.

STEP #3 Center the spectrum analyzer display on the frequency of the input signal and measure and record the signal level at the RF output port of the EUT.

STEP #4 Calculate the EUT through-loss by subtracting the output level measured in STEP #3 (dBmV) from the input level of +10 dBmV.

STEP #5 Repeat STEPS 2 through 4 for each of the remaining three test channels.

4.4.7 Adjacent Channel Rejection

Adjacent Channel rejection measurements are performed for the lower adjacent channel color subcarrier, the lower adjacent channel aural carrier, and the upper adjacent channel video carrier. These tests are performed in a sequential manner starting with the lower adjacent channel color subcarrier. A two-step testing process is used, an initial calibration measurement, followed by the adjacent channel rejection measurement.

4.4.7.1 Test Conditions

Test Channels: 3, 12, 53, and 74
Adjacent Channel Carrier Frequencies:

Channel	Lower Color	Lower Aural	Upper Video
Channel 3	58.83 MHz	59.75 MHz	67.25 MHz
Channel 12	202.83 MHz	203.75 MHz	211.25 MHz
Channel 53	394.83 MHz	395.75 MHz	403.25 MHz
Channel 74	520.83 MHz	521.75 MHz	529.25 MHz

Test Signal Amplitudes (at the EUT RF input port):

- Desired Video Carrier: +10 dBmV
- Desired Aural Carrier: 0 dBmV
- Lower Adjacent Channel Color Carrier: - 2 dBmV
- Lower Adjacent Channel Aural Carrier: + 3 dBmV
- Upper Adjacent Channel Video Carrier: +13 dBmV

Modulation:

- Desired Video Carrier: 0 IRE or 10 IRE Flat Field
- Desired Aural Carrier: Unmodulated
- Lower Adjacent Channel Color Carrier: Unmodulated
- Lower Adjacent Channel Aural Carrier: Unmodulated
- Upper Adjacent Channel Video Carrier: Unmodulated

4.4.7.2 Initial Calibration

STEP #1 Configure the test system and EUT as shown in Figure 4.12.

STEP #2 Adjust the test signal generator (desired channel) for the desired video and aural carrier levels and modulation as measured at the input to the EUT. Record generator/attenuator settings for each test channel.

STEP #3 For each test channel, adjust the CW signal generator (interfering signal generator) to obtain the required adjacent channel carrier level for each of the three adjacent channel signals as measured at the EUT's RF input port. Record generator output level for each adjacent channel frequency at each of the four test channels.

Note: When testing a cable converter, install the demodulator at the RF output of the cable converter to provide the baseband video signal.

4.4.7.3 Measurement Procedures

STEP #1 Adjust the test signal generator (desired channel) to the settings obtained in STEP #2 of the calibration procedure for the first test channel.

STEP #2 Adjust the CW signal generator for the lower adjacent color subcarrier frequency and output setting obtained in STEP #3 of the calibration procedure.

STEP #3 Set up the VM 700A television measurement set to display the noise spectrum of Field 1, Line 16 (0 IRE flat field). [Note: Verify that the EUT baseband signal is normalized to 1 Volt (Peak).] Scan the noise spectral display of the VM 700A (averaging mode) for an in-band interfering signal at approximately 2.42 MHz. Record the magnitude of the interfering signal.

Note: If no interfering signal is present, the level of the resultant interfering signal is below the noise floor of the EUT. In this circumstance, record the noise floor level and proceed to the next adjacent channel signal (STEP #6).

STEP #4 Change the frequency of the CW signal generator to the frequency of an equivalent in-band interfering signal (signal substitute reference signal). The frequency of the lower color subcarrier reference signal will be approximately equal to the desired video carrier frequency plus 2.42 MHz (for test channel

3, the reference signal, for the lower color subcarrier, will be approximately 63.67 MHz). Note that the reference signal produces a similar spectral line in the baseband spectral display as that produced by the lower adjacent color subcarrier.

STEP #5 Adjust the CW generator output level until the level of the reference interfering signal, as viewed in the baseband spectral display, is equal to the level recorded in STEP #3. Record the CW generator setting. The difference (dB) of the generator setting required to produce the lower adjacent channel color subcarrier (recorded in STEP #3 of the calibration procedure) and the final generator setting of the signal substitute reference signal is the adjacent channel rejection for the lower adjacent channel color subcarrier.

STEP #6 Repeat STEP #2 through STEP #5 for the lower adjacent channel aural carrier and the upper adjacent channel video carrier. The baseband interfering frequencies and reference signal frequencies are provided below for each of the adjacent channel signals and each of the four test channels.

STEP #7 Repeat STEP #1 through STEP #6 for each of the remaining test channels.

Approximate Frequency of Baseband Interfering Signal:

- Lower Adjacent Color Subcarrier: 2.42 MHz
- Lower Adjacent Aural Carrier: 1.50 MHz
- Upper Adjacent Video Carrier: 3.00 MHz

Approximate Reference Frequency for Lower Adjacent Color:

- Channel 3: 63.67 MHz
- Channel 12: 207.67 MHz
- Channel 53: 399.67 MHz
- Channel 73: 525.67 MHz

Approximate Reference Frequency for Lower Adjacent Aural:

- Channel 3: 62.75 MHz
- Channel 12: 206.75 MHz
- Channel 53: 398.75 MHz
- Channel 74: 524.75 MHz

Approximate Reference Frequency for Upper Adjacent Video:

- Channel 3: 64.25 MHz
- Channel 12: 208.25 MHz
- Channel 53: 400.25 MHz
- Channel 74: 526.25 MHz

4.4.8 Image Rejection

The Image Rejection test procedure is similar to the Adjacent Channel Rejection test procedure described in the preceding section. The procedure consists of an initial calibration in which the levels of the desired and undesired carriers are established at the input to the EUT, followed by the actual measurement procedure, in which signal substitution is employed. This test does not apply to cable converters employing double frequency conversion.

4.4.8.1 Test Conditions

Desired Test Channels: 3, 12, 53, and 74
Image Channel Carrier Frequencies:

Test Channel	Image Frequency
Channel 3	151.25 MHz
Channel 12	295.25 MHz
Channel 53	487.25 MHz
Channel 74	613.25 MHz

Test Signal Amplitudes (at the EUT RF input port):
- Desired Video Carrier: 0 dBmV
- Desired Aural Carrier: -10 dBmV
- Image Channel Video Carrier: +13 dBmV

Modulation:
- Desired Video Carrier: 0 IRE or 10 IRE Flat Field
- Desired Aural Carrier: Unmodulated
- Image Video Carrier: Unmodulated

4.4.8.2 Initial Calibration

STEP #1 Configure the test system and EUT as shown in Figure 4.13.

STEP #2 Adjust the TV signal generator (desired channel) for the desired video and aural carrier levels and modulation as measured at the input to the EUT. Record generator/attenuator settings for each test channel.

STEP #3 For each test channel, adjust the CW signal generator (image signal generator) to obtain the required image channel carrier level at the EUT's RF input port. Record the generator output level for each of the four test channels.

Note: When testing a cable converter, install the demodulator at the RF output of the cable converter to provide the baseband video signal.

4.4.8.3 Measurement Procedures

STEP #1 Adjust the TV signal generator (desired channel) to the settings obtained in STEP #2 of the calibration procedure for the first test channel.

STEP #2 Adjust the CW generator for the image carrier frequency and output setting obtained in STEP #3 of the calibration procedure for the first test channel.

STEP #3 Set up the VM 700A television measurement set to display the noise spectrum of Field 1, Line 16 (0 IRE flat field). [Note: Verify that the EUT baseband signal is normalized to 1 Volt (Peak).] Scan the noise spectral display of the VM 700A (averaging mode) for an in-band interfering signal at approximately 1.5 MHz in the baseband display. Record the magnitude of the interfering signal.

Note: If no interfering signal is present, the level of the resultant interfering signal is below the noise floor of the EUT. In this circumstance, record the noise floor level and proceed to the next test channel (STEP #6).

STEP #4 Change the frequency of the CW signal generator to the frequency of an equivalent in-band interfering signal (signal substitute reference signal). The frequency of the image reference signal will be approximately equal to the desired video carrier frequency plus 1.5 MHz (for test channel 3, the reference signal will be approximately 62.75 MHz). Note that the reference signal produces a similar spectral line in the baseband spectral display as that produced by the image carrier.

STEP #5 Adjust the CW generator output level until the level of the reference interfering signal, as viewed in the baseband spectral display, is equal to the level recorded in STEP #3. Record the CW generator setting. The difference (in dB) of the generator output setting required to produce the image channel carrier at a level of +13 dBmV (recorded in STEP #3 of the calibration procedure) and the final generator output setting of the reference signal (recorded in STEP #5) is the image channel rejection for the first test channel.

STEP #6 Repeat STEP #1 through STEP #5 for each of the remaining test channels. The approximate frequency of the signal substitute reference signal for each of the test channels is as follows:

Approximate Reference Frequency for Image Measurement:

- Channel 3: 62.75 MHz
- Channel 12: 206.75 MHz
- Channel 53: 398.75 MHz
- Channel 74: 524.75 MHz

4.4.9 Tuner Overload

Tuner overload measurements are performed with the desired test channel's aural and visual carriers offset downward in frequency by 80 kHz. The frequency offset is necessary to resolve the Composite Triple Beat product, which would otherwise fall on the desired video carrier frequency. The test procedure is similar to the adjacent channel and image channel procedures described in the preceding two sections. An initial calibration is performed to establish the input levels at each test frequency, followed by the actual measurement procedure which employs signal substitution for the measurement.

4.4.9.1 Test Conditions

Test Channels: 3, 12, 53, and 74
Offset Desired Carrier Frequencies:

Test Channel	Video Carrier	Aural Carrier
- Channel 3	61.17 MHz*	65.67 MHz*
- Channel 12	205.17 MHz*	209.67 MHz*
- Channel 53	397.17 MHz*	401.67 MHz*
- Channel 74	523.17 MHz*	527.67 MHz*

*Assigned Carrier Frequency Minus 80 kHz

Other Carrier Frequencies:
- All video carriers from channel 2 through channel 78, excluding the desired and image carriers.

Test Signal Amplitudes (at the EUT RF input port):
- Desired Video Carrier: +15 dBmV
- Desired Aural Carrier: +5 dBmV
- Other Video Carriers: +15 dBmV

Modulation:
- Desired Video Carrier: 0 or 10 IRE Flat Field
- Desired Aural Carrier: Unmodulated
- Other Video Carriers: Unmodulated

4.4.9.2 Initial Calibration

STEP #1 Configure the test system and EUT as shown in Figure 4.14.

STEP #2 With the Matrix generator disabled, adjust the TV signal generator (desired channel) for the desired video and aural carrier frequency offsets, levels, and modulation as measured at the input to the EUT. Record generator/attenuator settings for each test channel.

STEP #3 With the desired TV signal generator disabled, adjust the Matrix generator level controls so that each carrier is present at the input to the EUT at a level of +15 dBmV. Do not change individual carrier levels after this step.

STEP #4 With both the desired TV signal generator and Matrix signal generator disabled, set the reference CW signal generator to a frequency 0.5 MHz above the desired channel video carrier frequency and adjust for a level of +15 dBmV as measured at the input connector of the EUT. Record the generator output level. Repeat this step for all four test channels.

Note: When testing a cable converter, install the demodulator at the RF output port of the converter to provide the baseband video signal.

4.4.9.3 Measurement Procedures

STEP #1 With the Matrix generator disabled, adjust the TV signal generator (desired channel) to the settings obtained in STEP #2 of the calibration procedure for the first test channel.

STEP #2 Prior to activating the Matrix generator, disable the desired video carrier and the image video carrier on the Matrix generator. After disabling these carriers, turn on the Matrix generator and verify that all other carriers between 54 MHz and 550 MHz are present at the input to the EUT.

STEP #3 Set up the VM 700A television measurement set to display the noise spectrum of Field 1, Line 16 (0 IRE flat field). [Note: Verify that the EUT baseband signal is normalized to 1 Volt (Peak).] Scan the noise spectral display of the VM 700A (averaging mode) for in-band interfering signals. If present, CTB products will appear at approximately 0.08 MHz in the baseband display. CSO products will appear at 0.83 MHz and/or 1.33 MHz. Note that these products will appear 0.08 MHz higher than normal due to the offset of the desired channel. Other distortion products may also appear in the baseband display. Record the frequency and magnitude of each interfering signal.

Note: If no interfering signal is present, the level of the resultant interfering signals are below the noise floor of the EUT. In this circumstance, record the noise floor level and proceed to the next test channel (STEP #7).

STEP #4 Disable the Matrix generator and turn on the reference CW signal generator. For each interfering frequency recorded in STEP #3, a reference signal must be generated and input to the EUT which results in the identical interfering signal in the baseband display (signal substitution). The reference signal frequency will be equal to the desired carrier frequency (with offset) plus the baseband frequency of the interfering signal as recorded in STEP #3. Adjust the reference signal generator output frequency to correspond to the first interfering frequency recorded in STEP #3. Note that the reference signal produces a similar spectral line in the baseband spectral display as that produced by the Matrix generator.

STEP #5 Adjust the CW generator output level until the level of the reference interfering signal, as viewed in the baseband spectral display, is equal to the level recorded in STEP #3. Record the CW generator setting. The difference (in dB) of the reference generator output level (recorded in STEP #4 of the calibration procedure) and the final reference generator output level (recorded in STEP #5) is the equivalent in-band D/U ratio for the particular distortion product being measured.

STEP #6 Repeat STEPS 4 and 5 for each of the interfering signals recorded in STEP #3.

STEP #7 Repeat STEP #1 through STEP #6 for each of the remaining test channels.

4.5 Receiver Performance Test Results

This section presents test results in the eight receiver performance categories for a sample population of 35 television receivers, 8 VCR's and 13 cable converters.

4.5.1 Re-radiation of Cable Signals Test Results

All 56 test samples were tested for re-radiation of cable signals on each of the four test channels, in accordance with the test procedures contained in Section 4.4.2. Devices which were supplied with interconnecting cables were tested with the cables attached to the EUT in a normal configuration and properly terminated.

Prior to commencing the actual performance testing, initial tests were performed on the measurement system and television signal generator and associated coaxial

cable to verify that: 1) the measurement system sensitivity was sufficient for the measurement of cable signal re-radiation, and 2) radiated emissions from the television signal generator and input coaxial cable were well below the expected levels of re-radiation from the test samples.

The FCC regulates radiation from a cable delivery system under Part 76.605(a)(12) of its Rules and Regulations. The limit of radiation from a cable delivery system is 15 microvolts per meter (uV/m), at a distance of 30 meters, for frequencies less than or equal to 54 MHz and greater than 216 MHz; and 20 uV/m, at a distance of 3 meters, for frequencies between 54 MHz and 216 MHz. In order to make meaningful measurements of the re-radiation of cable signals from consumer receiving equipment, the sensitivity of the measurement system and the radiated emissions from the television signal generator and coaxial cable must be less than the FCC limits on each of the four test channels.

The preliminary tests performed at the CTJC test facility verified that the emissions from the television generator and coaxial input cable were less than the sensitivity of the measurement system, and that the measurement system sensitivity was less than the FCC limits. A comparison of the FCC limit and the measurement system sensitivity, for each test channel, is contained in Table 4.1 below. The data contained in Table 4.1 is referenced to a distance of 3 meters.

Test Channel	Frequency (MHz)	FCC Limit (uV/m @ 3 M)	Sensitivity (uV/m @ 3 M)
15	126 - 132	20	10
25	228 - 234	150	13
37	300 - 306	150	14
53	396 - 402	150	23

Table 4.1 Comparison of FCC Radiation Limit and Measurement System Sensitivity for Each Test Channel

Tests performed on the total test sample population showed that radiated cable signal emissions, for the majority of receivers tested, were below the minimum sensitivity of the measurement system and, therefore, well below the FCC limits. For devices with two selectable RF input ports, there was no measurable difference in radiated emissions with either input selected.

Cable signal radiated emissions were measurable on six television receivers. The measurement data on the six television receivers is contained in Table 4.2. Radiated emissions (uV/m) are presented in the table for each of the four test channels and for EUT operating and non-operating conditions. The shaded values in Table 4.2 indicate those emission levels which exceed the FCC limits.

In summary, out of the 56 receivers tested, only two exhibited re-radiation of cable signals at levels which exceed the FCC limits for cable delivery systems, as specified in Part 76.605(a)(12) of the FCC's Rules and Regulations.

4.5.2 Local Oscillator Leakage and Backfeed Test Results

Local oscillator leakage and backfeed tests were performed on the total test sample population, in accordance with the procedures contained in Section 4.4.3. The test results are presented in this Section in terms of the voltage appearing at the RF input port of the EUT.

Tests were performed at two different desired video carrier levels, 0 dBmV and +15 dBmV. It was determined from the test results that local oscillator leakage and backfeed are independent of the desired video carrier input level and, therefore, test results are presented for the 0 dBmV input level only.

4.5.2.1 Local Oscillator Leakage Test Results

The local oscillator leakage test results are presented in Tables 4.3 through 4.5 for television receivers, VCR's, and cable converters, respectively. Results are presented for each test sample in terms of the voltage appearing at the input port of the receiver, in units of decibels above one millivolt (dBmV).

The "less than" symbol (<) in the tables indicates that the local oscillator signal level was less than the sensitivity of the measurement system. The value following the "less than" symbol is the measurement system sensitivity for the specific channel under study.

Shading is used in the tables to highlight those voltage levels which could potentially cause "just perceptible" or greater interference in another subscriber's receiver. The minimum level of local oscillator leakage required to create "just perceptible" interference in another subscriber's receiver is dependent on the isolation between subscribers and the desired signal level at the other subscriber's receiver input port.

TABLE 4.2
RADIATED EMISSIONS
TELEVISION RECEIVERS

	FIELD STRENTGH (μV/m)							
	CHANNEL 15		CHANNEL 25		CHANNEL 37		CHANNEL 53	
SAMPLE NO.	POWER ON	POWER OFF	POWER ON	POWER OFF	POWER ON	POWER OFF	POWER ON	POWER OFF
007	*	*	17.8	13.5	19.0	19.9	34.7	30.9
016	*	*	26.3	26.3	*	*	*	*
019	13.3	*	*	*	*	*	*	*
021	14.9	13.9	27.5	51.3	*	*	*	*
027	14.9	*	87.1	125.9	114.8	177.8	295.1	436.5
028	16.4	*	97.7	144.5	69.2	194.9	223.9	338.8

* *Measured field strength below measurement system sensitivity.*

Exceeds emission limits specified in Part 76.605(a)(12) of the FCC Rules.

TABLE 4.3
LOCAL OSCILLATOR LEAKAGE
TEST RESULTS

TELEVISION RECEIVERS

SAMPLE NO.	CHANNEL 3 dBmV	CHANNEL 12 dBmV	CHANNEL 53 dBmV	CHANNEL 74 dBmV
001	−41.2	−42.9	−26.0	−18.9
002	−35.9	< −48.9	−28.4	−30.2
003	−35.9	< −48.9	−26.6	−29.5
004	< −49.2	< −48.9	−42.6	−36.6
005	< −49.2	−44.8	−42.3	< −42.4
006	−46.8	−45.6	−34.4	−24.5
007	< −49.2	< −48.9	−42.0	−31.0
008	−49.0	< −48.9	−42.5	−35.4
009	< −49.2	−37.3	−35.7	−32.8
010	< −49.2	−41.2	−35.1	< −42.4
011	< −49.2	< −48.9	< −45.2	< −42.4
012	−40.5	−29.9	−32.6	−21.9
013	−45.0	−45.8	−35.7	−22.4
014	−37.0	−38.5	−34.9	−29.3
015	< −49.2	−40.6	−37.5	−28.9
016	−38.8	< −48.9	−43.3	< −42.4
017	< −49.2	−44.8	−44.6	−19.0
018	−38.9	−30.8	< −45.2	< −42.4
019	−38.1	−37.2	−25.9	−26.0
020	< −49.2	< −48.9	−34.7	−37.2
021	< −49.2	−36.8	−30.8	−20.7
022	−41.9	< −48.9	< −45.2	−37.5
023	< −49.2	< −48.9	−43.7	−28.5
024	−40.9	−20.6	−26.8	−27.1
025	−45.1	< −48.9	< −45.2	−40.5
026	−47.5	−20.5	−24.7	−30.0
027	−44.3	−28.7	−43.3	−20.6
028	−39.3	−19.6	−15.0	−27.7
029	−35.5	−40.4	−25.8	−24.9
030	−44.5	< −48.9	−37.8	−32.3
031	−39.1	−36.6	−37.1	−34.4
032	−44.8	−45.1	−24.4	−30.1
033	−45.8	< −48.9	< −45.2	< −42.4
034	−41.6	< −48.9	< −45.2	< −42.4
035	< −49.2	< −48.9	< −45.2	< −42.4

NOTE: A "less than" symbol (<) indicates that the level is less than the measurement system sensitivity.

Level exceeds "just perceptible" interference threshold.

TABLE 4.4
LOCAL OSCILLATOR LEAKAGE
TEST RESULTS

VIDEO CASSETTE RECORDERS

SAMPLE NO.	CHANNEL 3 dBmV	CHANNEL 12 dBmV	CHANNEL 53 dBmV	CHANNEL 74 dBmV
101	−34.0	−40.4	< −45.2	−36.1
102	−44.8	−35.7	−40.5	−21.6
103	< −49.2	−45.6	< −45.2	< −42.4
104	< −49.2	< −48.9	−33.0	−35.1
105	< −49.2	< −48.9	< −45.2	< −42.4
106	−37.1	−35.6	−37.4	−10.4
107	−35.2	−31.4	−36.8	−12.2
108	−28.4	−38.1	−25.0	−26.7

NOTE: A "less than" symbol (<) indicates that the level is less than the measurement system sensitivity.

Level exceeds "just perceptible" interference threshold.

TABLE 4.5
LOCAL OSCILLATOR LEAKAGE
TEST RESULTS

CABLE CONVERTERS

SAMPLE NO.	CHANNEL 3 dBmV	CHANNEL 12 dBmV	CHANNEL 53 dBmV	CHANNEL 74 dBmV
201	< −49.2	< −48.9	< −45.2	< −42.4
203	< −49.2	< −48.9	< −45.2	*
204	< −49.2	< −48.9	< −45.2	*
206	< −49.2	−45.0	< −45.2	−41.1
208	< −49.2	< −48.9	*	*
209	< −49.2	< −48.9	< −45.2	< −42.4
212	< −49.2	< −48.9	< −45.2	< −42.4
214	< −49.2	< −48.9	< −45.2	< −42.4
216	< −49.2	< −48.9	< −45.2	< −42.4
218	< −49.2	< −48.9	< −45.2	< −42.4
220	< −49.2	< −48.9	< −45.2	< −42.4
222	< −49.2	< −48.9	< −45.2	< −42.4
224	< −49.2	< −48.9	< −45.2	*

NOTE: A "less than" symbol (<) indicates that the level is less than the measurement system sensitivity.
** Cable converter did not tune to this test channel.*

Recorded level exceeds "just perceptible" interference threshold.

The FCC requires a minimum of 18 dB of isolation between subscribers. In practice, the minimum isolation is thought to be 22 dB. Assuming that "just perceptible" interference is created at a desired to undesired (D/U) signal level of 55 dB, then for a desired signal level of 0 dBmV, an undesired (interfering) signal level of -55 dBmV at the input to the receiver will result in "just perceptible" interference. Taking into account the 22 dB minimum isolation between subscribers, the minimum level of local oscillator leakage required to create "just perceptible" interference in another subscriber's receiver is -33 dBmV. Test samples exhibiting local oscillator voltage levels greater than or equal to this threshold value are shaded in the tables.

A review of Table 4.3 indicates that local oscillator leakage performance in television receivers degrades with increasing frequency. None of the test samples exhibit performance which exceeds the threshold of "just perceptible" interference on Channel 3. However, on Channel 12, the threshold is exceeded for 17% of the test samples, 31% exceeded the threshold on Channel 53, and 60% exceeded the threshold on Channel 74. A similar pattern is exhibited in Table 4.4 for VCR's.

Television receivers and VCR's exhibited the highest levels of local oscillator leakage. The highest local oscillator voltage measured for a television receiver was -15 dBmV. The highest level measured for a VCR was -10.4 dBmV.

Test results for cable converters, presented in Table 4.5, show the level of local oscillator leakage in these devices was generally below the sensitivity of the measurement system. It is believed that most, if not all, of the cable converters tested employ double frequency conversion and, therefore, do not create a local oscillator signal within the cable television frequency band.

4.5.2.2 Backfeed Test Results

Backfeed, as defined here, is any spurious signal emanating from the EUT which is present at the RF input port. For each standard test channel, the RF input port of each EUT was scanned, over the frequency band from 5 MHz to 600 MHz, in 100 MHz increments. Any spurious signal identified in the scanning process, which was greater than -35 dBmV referenced to the input of the EUT, was recorded.

Table 4.6 presents the results of the backfeed measurements. Only five television receivers and three cable converters were found to have spurious emissions present at their RF input ports which exceeded -35 dBmV. Those emissions which are within the cable delivery system frequency band (54 to 550 MHz) and which exceed the "just perceptible" interference threshold (-33 dBmV) are shaded in the table.

TABLE 4.6
BACKFEED TEST RESULTS

	SAMPLE NO.	CHANNEL 3 MHz	CHANNEL 3 dBmV	CHANNEL 12 MHz	CHANNEL 12 dBmV	CHANNEL 53 MHz	CHANNEL 53 dBmV	CHANNEL 74 MHz	CHANNEL 74 dBmV
TELEVISIONS	001	41.26	−34.0	--	--	--	--	--	--
	011	--	--	45.75	−33.9	--	--	--	--
	012	--	--	502.00	−34.0	--	--	--	--
	013	41.22	−32.9	41.22	−32.1	--	--	41.22	−33.2
	019	45.75	−34.6	--	--	45.75	−32.3	45.75	−32.1
VIDEO CASSETTE RECORDERS		There were no emissions found to be greater than −35.0 dBmV							
CABLE CONVERTERS	209	8.02	−25.6	8.02	−25.0	8.02	−20.9	8.02	−18.6
	209	10.53	−20.4	12.80	−24.7	15.80	−31.4	--	--
	212	5.94	−30.7	--	--	--	--	--	--
	224	--	--	144.00	−1.7	336.00	−2.8	--	--

Emission frequency is within 54 to 550 MHz cable band and level exceeds "just perceptible" interference threshold.

In the case of the five television receivers, the majority of the emissions appear to be associated with the intermediate frequencies of the receiver. In the case of the cable converters, two of the units exhibited emissions at frequencies below the cable delivery system frequency band. Cable converter 224, however, generated emissions on two of the test channels which were within the cable frequency band and were more than 30 dB above the "just perceptible" interference threshold.

4.5.3 A/B Switch Isolation Test Results

Tests were performed on devices equipped with two selectable RF input ports for isolation between the non-selected and selected input port (A to B and B to A) and between the non-selected input port and the output port (A to C and B to C). In addition, tests were performed on each of the VCR's for isolation between the input port and the output port when the VCR is operating in the "VCR Play" mode.

4.5.3.1 Non-Selected to Selected Input Port Isolation Test Results

Input selector switch isolation standards for television receivers are specified by the FCC in Section 15.117(h) of its Rules and Regulations. Under this section of the Rules, isolation must be at least 80 dB between 54 and 216 MHz and at least 60 dB between 216 and 550 MHz. This level of isolation is required whether the device is powered or unpowered.

The non-selected to selected input port isolation test results are presented in Table 4.7 for the eight television receivers which were equipped with two selectable RF input ports. Isolation tests were performed from port A to port B with port B selected, and from port B to port A with port A selected. The tests were repeated with power to the receiver turned off. Shading is used in the table to highlight those measured values of isolation which are less than the FCC standard.

The test results of Table 4.7 indicate that switch isolation performance is generally not symmetric. The isolation from port A to port B may be significantly different than the isolation from port B to port A for the same test sample on the same test channel. Further, there can be significant differences in switch isolation characteristics between power on and power off conditions. The test results also indicate that switch isolation performance degrades substantially with increasing frequency.

TABLE 4.7
NON–SELECTED TO SELECTED INPUT PORT ISOLATION TEST RESULTS

	CHANNEL 3				CHANNEL 12			
	A TO B ISOLATION (dB)		B TO A ISOLATION (dB)		A TO B ISOLATION (dB)		B TO A ISOLATION (dB)	
SAMPLE NO.	POWER ON	POWER OFF	POWER ON	POWER OFF	POWER ON	POWER OFF	POWER ON	POWER OFF
010	89.5	> 106.9	102.6	> 106.9	91.0	89.7	83.6	88.2
011	> 106.9	> 106.9	89.2	90.6	91.9	86.4	75.2	77.4
013	> 106.9	> 106.9	> 106.9	> 106.9	92.4	85.2	89.1	76.6
014	94.3	74.3	> 106.9	74.5	70.7	87.0	97.5	87.4
016	98.6	97.1	99.3	103.0	100.6	80.1	87.0	83.2
029	89.8	96.5	87.0	90.4	87.9	78.3	84.1	82.4
032	102.9	104.9	89.6	> 106.9	> 106.6	> 106.6	81.4	87.4
035	> 106.9	> 106.9	105.5	> 106.9	79.4	86.0	83.1	84.3

NOTE: A "greater than" symbol (>) indicates that the interfering signal was below the sensitivity of the measurement system and, therefore, the actual isolation of the test sample is greater than the value to the right of the symbol.

Indicates isolation was less than the FCC minimum value of 80dB for frequencies between 54 MHz and 216 MHz.

TABLE 4.7 (cont'd)
NON–SELECTED TO SELECTED
INPUT PORT ISOLATION
TEST RESULTS

	CHANNEL 53				CHANNEL 74			
	A TO B ISOLATION (dB)		B TO A ISOLATION (dB)		A TO B ISOLATION (dB)		B TO A ISOLATION (dB)	
SAMPLE NO.	POWER ON	POWER OFF	POWER ON	POWER OFF	POWER ON	POWER OFF	POWER ON	POWER OFF
010	81.0	81.3	78.5	82.2	74.3	76.8	68.3	75.8
011	75.1	71.4	76.2	79.3	77.9	78.9	78.5	79.2
013	71.6	81.8	80.5	85.3	79.2	78.0	82.0	91.1
014	61.1	69.1	81.3	69.1	54.5	62.3	73.0	61.0
016	85.4	67.6	78.5	67.7	83.1	67.1	70.0	66.3
029	76.3	79.7	71.3	67.1	67.4	66.4	65.4	63.8
032	> 106.0	> 106.0	69.4	66.9	> 105.1	> 105.1	58.9	57.4
035	72.6	68.2	70.8	70.0	73.0	63.4	62.8	62.2

NOTE: A "greater than" symbol (>) indicates that the interfering signal was below the sensitivity of the measurement system and, therefore, the actual isolation of the test sample is greater than the value to the right of the symbol.

Indicates isolation was less than the FCC minimum value of 60dB for frequencies between 216 MHz and 550 MHz.

Six of the eight receivers tested exhibited switch isolation performance less than the FCC minimum standard, on at least one test channel, and in at least one of the four configurations tested. Of those six, only one receiver exhibited a switch isolation greater than 6 dB below the standard.

4.5.3.2 Non-Selected Input to Output Port Isolation Test Results

Test results for isolation between the non-selected input port and the output port are presented in Table 4.8. The input to output port isolation tests were performed on eight television receivers in accordance with the procedures described in Section 4.4.4.2.

Tests were performed for isolation between port A and port C with ports B and C common, and between port B and port C with ports A and C common.

The test results of Table 4.8 indicate that there can be significant differences in isolation performance dependent on the selected input port. Further, switch isolation performance between the input and output port degrades substantially with increasing frequency.

For a given undesired signal level at the non-selected input port and a given desired signal level at the selected input port, it is possible to calculate an isolation level which will result in "just perceptible" interference to the received picture. A D/U signal ratio of 55 dB at the output port is assumed to be the "just perceptible" interference threshold.

Given a signal level of +30 dBmV at the non-selected input port and a desired input signal level of 0 dBmV at the selected input port, a switch isolation of greater than 85 dB is required to insure that the resultant interference level is below the "just perceptible" threshold. For such a high level signal at the non-selected port, the majority of the receivers would exhibit interference above the "just perceptible" threshold level on the two UHF channels. For a more reasonable signal level of +15 dBmV at the non-selected input port, an isolation of 70 dB is required to insure that the interference level is below the "just perceptible" threshold. Four of the eight receivers exhibited switch isolation performance below this level on channel 74 for one of the two configurations tested.

TABLE 4.8
NON–SELECTED INPUT TO OUTPUT PORT ISOLATION TEST RESULTS

SAMPLE NO.	CHANNEL 3 A TO C ISOLATION (dB)	CHANNEL 3 B TO C ISOLATION (dB)	CHANNEL 12 A TO C ISOLATION (dB)	CHANNEL 12 B TO C ISOLATION (dB)	CHANNEL 53 A TO C ISOLATION (dB)	CHANNEL 53 B TO C ISOLATION (dB)	CHANNEL 74 A TO C ISOLATION (dB)	CHANNEL 74 B TO C ISOLATION (dB)
010	94.0	> 100.0	> 99.2	85.3	76.1	79.4	70.6	72.6
011	95.8	> 101.0	79.5	> 98.7	81.1	89.4	83.1	95.8
013	> 100.1	> 100.5	97.3	82.4	> 96.4	> 96.9	93.3	> 100.0
014	> 103.0	> 97.0	83.7	> 98.2	73.7	> 97.0	66.4	91.8
016	89.7	96.9	96.1	87.6	77.0	82.6	77.9	77.0
029	95.8	87.7	89.7	89.7	92.2	74.5	77.5	66.0
032	> 98.0	85.9	93.5	86.0	77.1	74.9	72.2	66.4
035	> 101.0	> 97.5	85.6	77.3	*	69.4	*	67.6

NOTE: A "greater than" symbol (>) indicates that the interfering signal was below the noise floor of the test sample and, therefore, the actual isolation is greater than the value to the right of the symbol.

** Television receiver did not tune to cable channels 53 and 74 with the "B" input port selected.*

4.5.3.3 Input to Output Port Internal Switch Isolation Test Results

Tests were performed on eight VCR's to determine the isolation between the input and output port when the VCR is operating in the "VCR Play" mode. For this test, a VHS test tape was created which contained a 10 IRE flat field picture. The VCR output was selected to channel 3, and a CW signal was input to the VCR at a level of +30 dBmV. The frequency of the CW signal was set to 63.8 MHz or 2.55 MHz above the channel 3 video carrier frequency. With the test tape playing, the VCR channel 3 output spectrum was scanned to identify the 63.8 MHz CW interfering signal. If a signal was present, the level of the signal was measured and the isolation determined.

The test results for the VCR input to output port internal switch isolation are presented in Table 4.9 below.

SAMPLE NO.	ISOLATION (dB)	SAMPLE NO.	ISOLATION (dB)
101	69.3	105	83.9
102	75.8	106	68.1
103	86.4	107	70.5
104	75.4	108	73.6

Table 4.9 VCR Input to Output Internal Switch Isolation (Channel 3)

VCR internal switch isolation ranged from a low of 68.1 dB to a high of 86.4 dB. The average isolation was found to be 77.8 dB.

In order to determine whether or not "just perceptible" or greater interference would be caused in any of the VCR's tested, the channel 3 video output carrier level was also measured for each EUT. The video carrier levels ranged from +4.3 dBmV to +5.6 dBmV. A D/U signal ratio of 55 dB is assumed to be the "just perceptible" interference threshold. For an output video carrier level of +5 dBmV, an interfering signal level of -50 dBmV, at the VCR output, would therefore result in "just perceptible" interference. Now, for a maximum expected input signal level

of +15 dBmV, the internal switch isolation must be greater than 65 dB (+15 dBmV - (-50 dBmV)) in order that the interference level is below the "just perceptible" threshold. All eight VCR's tested exhibited internal switch isolation greater than 65 dB.

4.5.4 DPU Backfeed Test Results

DPU backfeed tests were performed on the total sample population of 56 receivers in accordance with the procedures contained in Section 4.4.5. The test results are tabulated in Tables 4.10 through 4.12 for television receivers, VCR's and cable converters, respectively. **The values presented in the tables represent the voltage appearing at the input port of the EUT when the EUT is radiated with a 100 millivolt per meter (100 mV/m) ambient field strength at the EUT's orientation of maximum susceptibility.**

Tests were performed at two different desired input signal levels. Test results on channels 6 and 12 verified that the DPU backfeed voltage level is independent of the desired channel input signal level. Tests performed on channels 78 and 59 (broadcast) showed that the isolation of the directional coupler was insufficient to resolve the DPU backfeed signal for all test samples at the higher input level. For these reasons, only the test results obtained at the 0 dBmV input level are presented here.

Shading is used in the tables to highlight those DPU backfeed voltage levels which could potentially cause "just perceptible" or greater interference in another subscriber's receiver. The threshold level to create "just perceptible" interference in another subscriber's receiver is -33 dBmV as was discussed in Section 4.5.2.1.

The "less than" symbol (<) is used in the tables to indicate that the DPU backfeed voltage level is less than the sensitivity of the measurement system. The value following the "less than" symbol is the measurement system sensitivity for the channel under study.

A review of Table 4.10 indicates that several television receivers generate DPU backfeed signal levels which are greater than the threshold for "just perceptible" interference when radiated with a 100 mv/m ambient field strength. The number of receivers which generate DPU backfeed levels above the interference threshold is highest for cable channel 6 and decreases with increasing frequency. A similar relationship with frequency was observed in the DPU susceptibility tests described in Section 3.0.

TABLE 4.10
DPU BACKFEED
TEST RESULTS

TELEVISION RECEIVERS

SAMPLE NO.	CHANNEL 6 dBmV	CHANNEL 12 dBmV	CHANNEL 78 dBmV	CHANNEL 59 dBmV
001	−34.5	−30.5	< −50.3	< −44.3
002	−34.6	−32.7	−43.7	< −44.3
003	−32.8	−39.3	< −50.3	< −44.3
004	< −59.4	−44.5	−22.2	−28.0
005	−42.5	−43.4	−46.1	< −44.3
006	−51.1	−52.5	−47.7	< −44.3
007	−32.0	−18.5	−13.8	−16.2
008	−36.0	−42.0	−22.3	−27.9
009	−43.0	−42.3	< −50.3	< −44.3
010	−40.6	−45.5	−42.7	< −44.3
011	−24.0	−28.7	−30.8	−42.4
012	−42.3	−41.3	< −50.3	< −44.3
013	−29.3	−30.3	−28.6	−35.5
014	−32.5	−40.7	−46.9	−40.7
015	−42.6	< −56.7	< −50.3	< −44.3
016	−26.4	−27.6	−25.6	−34.7
017	−38.1	−42.0	−47.0	< −44.3
018	−16.7	−29.2	−46.5	< −44.3
019	−12.4	−26.2	−42.5	< −44.3
020	−34.4	−37.9	−45.4	< −44.3
021	−22.6	−13.6	−20.0	−26.1
022	−55.5	−43.9	−47.2	< −44.3
023	−48.9	< −56.7	−50.1	< −44.3
024	−53.3	−49.4	−45.7	< −44.3
025	−43.4	−44.5	< −50.3	< −44.3
026	−58.3	−48.0	< −50.3	< −44.3
027	−19.3	−5.4	−10.9	−23.8
028	−15.1	−6.9	−12.7	−26.8
029	−46.8	−48.2	< −50.3	< −44.3
030	−42.6	−44.5	< −50.3	< −44.3
031	−42.5	−44.6	< −50.3	< −44.3
032	−36.5	−37.2	−38.9	−40.7
033	−31.2	−46.2	< −50.3	< −44.3
034	−20.4	−29.9	−48.4	−35.8
035	−37.4	< −56.7	−49.2	< −44.3

NOTE: A "less than" symbol (<) indicates that the level is less than the mesurement system sensitivity.

Level exceeds "just perceptible" interference threshold.

TABLE 4.11
DPU BACKFEED
TEST RESULTS

VIDEO CASSETTE RECORDER

SAMPLE NO.	CHANNEL 6 dBmV	CHANNEL 12 dBmV	CHANNEL 78 dBmV	CHANNEL 59 dBmV
101	−56.0	< −56.7	< −50.3	< −44.3
102	−51.8	−52.3	< −50.3	< −44.3
103	−51.7	−35.6	−47.7	< −44.3
104	−57.0	−49.4	< −50.3	< −44.3
105	< −59.4	−51.5	< −50.3	< −44.3
106	−44.8	−37.7	−36.0	< −44.3
107	< −59.4	−41.8	−40.5	−34.3
108	−46.5	−49.1	< −50.3	< −44.3

NOTE: A "less than" symbol (<) indicates that the level is less than the mesurement system sensitivity.

Level exceeds "just perceptible" interference threshold.

TABLE 4.12
DPU BACKFEED
TEST RESULTS

CABLE CONVERTERS

SAMPLE NO.	CHANNEL 6 dBmV	CHANNEL 12 dBmV	CHANNEL 78 dBmV
201	−50.0	< −56.7	< −50.3
203	−42.2	< −56.7	*
204	−53.4	< −56.7	*
206	−44.9	−46.3	< −50.3
208	−56.7	< −56.7	*
209	−55.3	−49.3	< −50.3
212	−56.5	< −56.7	< −50.3
214	−54.1	< −56.7	< −50.3
216	−58.7	< −56.7	< −50.3
218	−59.0	−52.3	< −50.3
220	< −59.4	−53.4	< −50.3
222	−55.6	−41.8	< −50.3
224	−54.4	−49.4	*

NOTE: A "less than" symbol (<) indicates that the level is less than the measurement system sensitivity.
** Cable converter did not tune to this test channel.*

Level exceeds "just perceptible" interference threshold.

Comparison of the DPU backfeed test results of Table 4.10 with the television receiver DPU susceptibility test results (Tables 3.1 through 3.4) reveals that television receivers which are most susceptible to DPU interference produce the highest DPU backfeed signal levels. The highest DPU backfeed voltage measured for a television receiver was -5.4 dBmV, or 27.6 dB above the "just perceptible" interference threshold.

The DPU backfeed signal levels generated by VCR's and cable converters, presented in Tables 4.11 and 4.12, show no levels above the "just perceptible" interference threshold. There are several entries missing in Table 4.12 due to the fact that none of the cable converters tested tuned to broadcast channel 59, and only nine of the thirteen units tuned to cable channel 78.

4.5.5 VCR Through-Loss

The sample population of 8 VCR's was tested for through-loss in accordance with the test procedures contained in Section 4.4.6. Through-loss is defined as the loss between the input and output ports of a VCR when the VCR is operating in the "TV mode." The through-loss test results are tabulated in Table 4.13 below.

	VCR Through-Loss (dB)			
Sample No.	Channel 3	Channel 12	Channel 53	Channel 74
101	3.7	3.4	4.0	3.8
102	3.8	3.8	4.6	5.0
103	3.9	3.5	3.8	3.6
104	4.5	3.7	4.2	3.8
105	3.8	3.9	3.6	4.2
106	4.0	3.5	4.5	4.4
107	4.1	3.5	4.6	4.8
108	3.5	3.4	4.7	4.0

Table 4.13 VCR Through-Loss Test Results

The table indicates that the variation in through-loss, for the 8 VCR's tested, is relatively small, ranging from a minimum value of 3.4 dB to a maximum value of 5.0 dB. Averaging the results over the 8 test samples and 4 test channels yields an average VCR through-loss of 4.05 dB.

4.5.6 Adjacent Channel Rejection Test Results

Three sequential adjacent channel rejection tests were performed on each of the 56 test samples in accordance with the test procedures contained in Section 4.4.7. Rejection tests were performed for the following three adjacent channel carriers: lower adjacent color subcarrier, lower adjacent aural carrier, and upper adjacent video carrier. The results are presented in a tabular format in terms of the measured receiver rejection and the resultant equivalent desired to undesired (D/U) signal ratio.

The use of the "greater than" symbol (>) in the tables of this section indicates that the rejection or D/U signal ratio is greater than the value to the right of the symbol. The use of the "greater than" symbol also indicates that the receiver adjacent channel rejection was sufficiently high, such that the resultant baseband interfering signal was below the noise floor of the EUT.

Shading is used in the tables to highlight receiver performance which results in "just perceptible" or greater interference in the received picture. A D/U signal ratio of 55 dB, referenced to the input of the receiver, is assumed to be the "just perceptible" interference threshold.

4.5.6.1 Lower Adjacent Channel Color Subcarrier Test Results

Lower adjacent color subcarrier rejection tests were performed with the desired video carrier level set to +10 dBmV and the lower adjacent channel color subcarrier level set to -2 dBmV. The desired aural carrier level was set to 0 dBmV. Test results are presented in Tables 4.14 through 4.16 for television receivers, VCR's, and cable converters, respectively.

A review of Table 4.14 indicates that seven of the thirty-five television receivers tested exhibited interference levels greater than the "just perceptible" interference threshold on at least one channel. The majority of the receivers exhibited D/U ratios greater than 60 dB for the maximum expected level of the lower adjacent color subcarrier (-2 dBmV). The worst interference level produced in a television receiver was 13 dB greater than the "just perceptible" threshold.

TABLE 4.14
LOWER ADJACENT CHANNEL COLOR SUBCARRIER REJECTION TEST RESULTS

TELEVISION RECEIVERS

SAMPLE	CHANNEL 3		CHANNEL 12		CHANNEL 53		CHANNEL 74	
NO.	REJ.	D/U	REJ.	D/U	REJ.	D/U	REJ.	D/U
001	50.1	62.1	37.3	49.3	48.3	60.3	50.6	62.6
002	48.1	60.1	49.2	61.2	45.8	57.8	45.3	57.3
003	> 63.2	> 75.2	63.4	75.4	63.9	75.9	63.9	75.9
004	58.6	70.6	58.2	70.2	56.8	68.8	*	*
005	61.6	73.6	51.2	63.2	47.8	59.8	50.6	62.6
006	45.1	57.1	47.2	59.2	42.8	54.8	43.1	55.1
007	> 60.6	> 72.6	> 63.2	> 75.2	> 62.8	> 74.8	> 65.1	> 77.1
008	58.1	70.1	60.2	72.2	> 64.3	> 76.3	59.1	71.1
009	61.1	73.1	50.7	62.7	48.8	60.8	52.1	64.1
010	58.3	70.3	46.2	58.2	44.2	56.2	51.1	63.1
011	54.1	66.1	53.2	65.2	54.3	66.3	54.1	66.1
012	46.6	58.6	44.2	56.2	43.8	55.8	44.1	56.1
013	44.1	56.1	40.2	52.2	37.3	49.3	44.1	56.1
014	35.6	47.6	32.2	44.2	29.8	41.8	32.1	44.1
015	47.6	59.6	44.2	56.2	41.8	53.8	45.6	57.6
016	56.1	68.1	55.2	67.2	54.3	66.3	56.1	68.1
017	53.1	65.1	52.2	64.2	49.8	61.8	53.6	65.6
018	43.6	55.6	40.2	52.2	40.3	52.3	42.6	54.6
019	40.6	52.6	38.7	50.7	39.8	51.8	39.6	51.6
020	51.1	63.1	51.7	63.7	48.8	60.8	48.1	60.1
021	50.2	62.2	47.2	59.2	45.8	57.8	45.1	57.1
022	58.4	70.4	53.7	65.7	49.8	61.8	> 63.6	> 75.6
023	48.1	60.1	44.2	56.2	43.8	55.8	45.1	57.1
024	57.6	69.6	59.2	71.2	56.3	68.3	57.1	69.1
025	54.6	66.6	48.7	60.7	46.8	58.8	48.1	60.1
026	49.1	61.1	47.7	59.7	46.3	58.3	48.1	60.1
027	54.6	66.6	48.7	60.7	47.8	59.8	46.1	58.1
028	56.6	68.6	54.7	66.7	54.8	66.8	56.6	68.6
029	61.6	73.6	59.6	71.6	58.7	70.7	> 58.1	> 70.1
030	54.6	66.6	50.7	62.7	50.3	62.3	48.1	60.1
031	50.1	62.1	46.2	58.2	47.3	59.3	45.6	57.6
032	49.6	61.6	50.2	62.2	51.3	63.3	54.1	66.1
033	> 60.6	> 72.6	> 61.2	> 73.2	> 57.8	> 69.8	> 58.6	> 70.6
034	55.6	67.6	57.2	69.2	57.8	69.8	53.1	65.1
035	46.1	58.1	43.2	55.2	44.8	56.8	51.6	63.6

NOTE: A "greater than" symbol (>) indicates rejection or D/U ratio is greater than the value to the right of the symbol.
** Test sample did not tune to this channel.*

Level exceeds "just perceptible" interference threshold.

TABLE 4.15
LOWER ADJACENT CHANNEL
COLOR SUBCARRIER REJECTION
TEST RESULTS

VIDEO CASSETTE RECORDERS

SAMPLE	CHANNEL 3		CHANNEL 12		CHANNEL 53		CHANNEL 74	
NO.	REJ.	D/U	REJ.	D/U	REJ.	D/U	REJ.	D/U
101	46.6	58.6	44.2	56.2	45.8	57.8	46.1	58.1
102	46.6	58.6	44.2	56.2	47.8	59.8	42.1	54.1
103	> 55.6	> 67.6	> 60.2	> 72.2	> 61.3	> 73.3	> 59.1	> 71.1
104	48.6	60.6	46.2	58.2	50.8	62.8	50.6	62.6
105	49.6	61.6	47.2	59.2	46.8	58.8	48.1	60.1
106	47.1	59.1	43.2	55.2	43.8	55.8	42.1	54.1
107	50.6	62.6	50.2	62.2	51.3	63.3	45.6	57.6
108	39.6	51.6	37.7	49.7	36.8	48.8	37.6	49.6

NOTE: A "greater than" symbol (>) indicates rejection or D/U ratio is greater than the value to the right of the symbol.

Level exceeds "just perceptible" interference threshold.

TABLE 4.16
LOWER ADJACENT CHANNEL
COLOR SUBCARRIER REJECTION
TEST RESULTS

CABLE CONVERTERS

SAMPLE	CHANNEL 3		CHANNEL 12		CHANNEL 53		CHANNEL 74	
NO.	REJ.	D/U	REJ.	D/U	REJ.	D/U	REJ.	D/U
201	> 56.6	> 68.6	> 59.2	> 71.2	> 56.3	> 68.3	> 56.1	> 68.1
203	48.1	60.1	48.2	60.2	48.8	60.8	*	*
204	> 58.6	> 70.6	> 57.7	> 69.7	> 59.8	> 71.8	*	*
206	> 49.6	> 61.6	> 56.2	> 68.2	> 56.8	> 68.8	> 56.1	> 68.1
208	58.6	70.6	56.7	68.7	*	*	*	*
209	45.2	57.2	45.7	57.7	47.8	59.8	47.6	59.6
212	> 58.6	> 70.6	> 58.2	> 70.2	> 56.8	> 68.8	> 57.1	> 69.1
214	> 56.6	> 68.6	> 57.7	> 69.7	> 59.8	> 71.8	> 59.1	> 71.1
216	> 62.6	> 74.6	> 59.2	> 71.2	> 62.8	> 74.8	> 62.1	> 74.1
218	> 60.1	> 72.1	> 59.2	> 71.2	> 59.8	> 71.8	> 59.1	> 71.1
220	> 61.2	> 73.2	> 60.7	> 72.7	> 60.8	> 72.8	> 60.1	> 72.1
222	> 58.6	> 70.6	59.7	71.7	> 58.8	> 70.8	59.1	71.1
224	> 61.6	> 73.6	> 61.2	> 73.2	> 56.3	> 68.3	*	*

NOTE: A "greater than" symbol (>) indicates rejection or D/U ratio is greater than the value to the right of the symbol.
** Test sample did not tune to this channel.*

The average television receiver rejection to the lower adjacent channel color subcarrier was found to be 53.5 dB[1]. There was little or no variation in receiver rejection performance with frequency.

The VCR test results, presented in Table 4.15, show that three of the eight VCR's tested exhibited interference levels greater than the "just perceptible" interference threshold on at least one channel. Average rejection in VCR's was found to be 49.5 dB[1], or 4.0 dB less than the average television receiver rejection.

The cable converter test results for lower adjacent color subcarrier rejection are presented in Table 4.16. None of the cable converters exhibited interference levels greater than the "just perceptible" interference threshold. In most cases, the resultant baseband interference signal level was below the noise floor of the EUT. For this reason, no average rejection value is calculated for cable converters.

4.5.6.2 Lower Adjacent Channel Aural Carrier Test Results

Lower adjacent channel aural carrier rejection tests were performed with the desired video carrier level set to +10 dBmV and the lower adjacent aural carrier level set to +3 dBmV. The desired channel aural carrier level was set to 0 dBmV. Tables 4.17, 4.18, and 4.19 present the measured rejection and resultant equivalent D/U ratios for the lower adjacent aural carrier rejection performance tests.

Table 4.17 indicates that ten television receivers experienced "just perceptible" or greater interference when subjected to the maximum allowable lower adjacent channel aural carrier level. The average receiver rejection to the lower adjacent aural carrier was found to be 57.6 dB[1]. There was a slight reduction in rejection performance with increasing frequency.

The worst interference level produced in a television receiver was 7.0 dB greater than the "just perceptible" threshold. Generally, the resultant D/U ratios for television receivers in this performance category were greater than 60 dB.

---

[1]The average rejection value may be understated due to the fact that in certain receivers, the resultant baseband interference signal was below the noise floor of the EUT. In this case, a rejection value corresponding to an interfering signal equal to the noise floor of the EUT was used in the calculation of the average rejection.

TABLE 4.17
LOWER ADJACENT CHANNEL
AURAL CARRIER REJECTION
TEST RESULTS

TELEVISION RECEIVERS

SAMPLE	CHANNEL 3		CHANNEL 12		CHANNEL 53		CHANNEL 74	
NO.	REJ.	D/U	REJ.	D/U	REJ.	D/U	REJ.	D/U
001	> 65.3	> 72.3	69.4	76.4	58.5	65.5	> 60.3	> 67.3
002	48.3	55.3	48.4	55.4	45.8	52.8	47.3	54.3
003	> 68.7	> 75.7	68.4	75.4	66.0	73.0	68.8	75.8
004	61.8	68.8	62.9	69.9	61.3	68.3	*	*
005	> 68.8	> 75.8	61.4	68.4	58.5	65.5	61.8	68.8
006	45.8	52.8	46.4	53.4	45.0	52.0	43.8	50.8
007	55.8	62.8	55.4	62.4	57.0	64.0	57.8	64.8
008	58.3	65.3	56.6	63.6	59.5	66.5	58.3	65.3
009	63.8	70.8	57.9	64.9	56.0	63.0	59.8	66.8
010	63.8	70.8	55.4	62.4	56.5	63.5	59.8	66.8
011	43.8	50.8	63.4	70.4	65.0	72.0	64.8	71.8
012	56.8	63.8	57.4	64.4	56.5	63.5	56.8	63.8
013	59.3	66.3	54.4	61.4	51.5	58.5	56.8	63.8
014	42.8	49.8	41.9	48.9	41.0	48.0	41.8	48.8
015	55.3	62.3	53.4	60.4	53.0	60.0	54.8	61.8
016	44.8	51.8	45.4	52.4	44.0	51.0	44.8	51.8
017	56.8	63.8	55.4	62.4	45.5	52.5	47.3	54.3
018	58.3	65.3	54.9	61.9	57.5	64.5	58.3	65.3
019	42.8	49.8	41.9	48.9	46.5	53.5	45.3	52.3
020	48.8	55.8	48.4	55.4	47.0	54.0	46.3	53.3
021	60.8	67.8	56.4	63.4	58.0	65.0	55.8	62.8
022	53.3	60.3	51.9	58.9	51.0	58.0	51.3	58.3
023	46.8	53.8	45.4	52.4	44.5	51.5	45.3	52.3
024	52.3	59.3	55.4	62.4	53.5	60.5	53.8	60.8
025	53.8	60.8	49.9	56.9	47.5	54.5	48.3	55.3
026	54.8	61.8	55.4	62.4	53.5	60.5	54.8	61.8
027	58.3	65.3	54.4	61.4	53.0	60.0	52.3	59.3
028	52.8	59.8	52.9	59.9	52.0	59.0	53.8	60.8
029	62.8	69.8	61.4	68.4	61.5	68.5	> 64.8	> 71.8
030	52.8	59.8	51.4	58.4	51.0	58.0	50.3	57.3
031	57.8	64.8	59.4	66.4	55.5	62.5	54.3	61.3
032	48.8	55.8	49.9	56.9	51.0	58.0	52.8	59.8
033	> 68.8	> 75.8	> 66.4	> 73.4	> 67.5	> 74.5	> 66.8	> 73.8
034	55.8	62.8	59.4	66.4	59.0	66.0	54.8	61.8
035	63.3	70.3	62.9	69.9	62.0	69.0	59.3	66.3

NOTE: A "greater than" symbol (>) indicates rejection or D/U ratio is greater than the value to the right of the symbol.
** Test sample did not tune to this channel.*

Level exceeds "just perceptible" interference threshold.

TABLE 4.18
LOWER ADJACENT CHANNEL AURAL CARRIER REJECTION TEST RESULTS

VIDEO CASSETTE RECORDERS

SAMPLE	CHANNEL 3		CHANNEL 12		CHANNEL 53		CHANNEL 74	
NO.	REJ.	D/U	REJ.	D/U	REJ.	D/U	REJ.	D/U
101	54.3	61.3	51.9	58.9	53.0	60.0	52.8	59.8
102	47.3	54.3	46.4	53.4	45.5	52.5	44.8	51.8
103	44.8	51.8	43.9	50.9	45.5	52.5	44.8	51.8
104	50.8	57.8	48.4	55.4	50.0	57.0	49.8	56.8
105	50.8	57.8	50.4	57.4	51.0	58.0	51.8	58.8
106	47.8	54.8	46.4	53.4	46.0	53.0	44.8	51.8
107	51.8	58.8	52.9	59.9	52.0	59.0	45.8	52.8
108	46.8	53.8	45.4	52.4	44.5	51.5	44.8	51.8

Level exceeds "just perceptible" interference threshold.

TABLE 4.19
LOWER ADJACENT CHANNEL
AURAL CARRIER REJECTION
TEST RESULTS

CABLE CONVERTERS

SAMPLE	CHANNEL 3		CHANNEL 12		CHANNEL 53		CHANNEL 74	
NO.	REJ.	D/U	REJ.	D/U	REJ.	D/U	REJ.	D/U
201	> 61.8	> 68.8	63.9	70.9	61.5	68.5	63.3	70.3
203	57.8	64.8	60.9	67.9	62.0	69.0	*	*
204	> 63.3	> 70.3	> 63.9	> 70.9	> 65.0	> 72.0	*	*
206	55.8	62.8	56.4	63.4	55.5	62.5	55.8	62.8
208	> 66.8	> 73.8	> 64.9	> 71.9	*	*	*	*
209	> 63.8	> 70.8	> 64.4	> 71.4	> 65.5	> 72.5	> 63.8	> 70.8
212	> 63.8	> 70.8	> 64.4	> 71.4	> 62.0	> 69.0	> 63.8	> 70.8
214	> 63.3	> 70.3	> 63.4	> 70.4	> 65.0	> 72.0	> 64.8	> 71.8
216	65.8	72.8	66.4	73.4	63.0	70.0	> 67.8	> 74.8
218	58.3	65.3	57.4	64.4	58.0	65.0	> 65.8	> 72.8
220	> 65.8	> 72.8	> 65.4	> 72.4	66.0	73.0	> 65.8	> 72.8
222	57.8	64.8	56.4	63.4	56.0	63.0	57.3	64.3
224	54.8	61.8	53.9	60.9	56.0	63.0	*	*

NOTE: A "greater than" symbol (>) indicates rejection or D/U ratio is greater than the value to the right of the symbol.
** Test sample did not tune to this channel.*

Table 4.18 contains the test results for VCR's. Five out of the eight VCR's experienced interference levels greater than the "just perceptible" threshold when subjected to the maximum allowable lower adjacent aural carrier level. The average rejection was found to be 48.9 dB[1], or 8.7 dB lower than the average rejection for television receivers.

Test results for cable converters are presented in Table 4.19. None of the cable converters experienced interference levels above the "just perceptible" interference threshold when subjected to the maximum allowable lower adjacent aural carrier level. The resultant D/U ratios were all above 60 dB. Because the resultant baseband interference signal level was below the EUT noise floor, in a large percentage of the cable converters tested, no average rejection value is calculated.

4.5.6.3 Upper Adjacent Channel Video Carrier Test Results

Upper adjacent channel video carrier rejection tests were performed with the desired video carrier level set to +10 dBmV and the upper adjacent video carrier level set to +13 dBmV. The desired aural carrier was set to 0 dBmV. Tables 4.20, 4.21, and 4.22 present the test results for the upper adjacent channel video carrier rejection tests.

A review of all three Tables in this performance category indicates that only one television receiver exhibited interference levels greater than the "just perceptible" interference threshold when subjected to the maximum allowable upper adjacent video carrier level. The resultant baseband interference levels in most receivers tested were below the noise floor of the receiver.

4.5.7 Image Rejection Test Results

Image rejection tests were performed on the total sample population of 56 receivers in accordance with the test procedures contained in Section 4.4.8. The results are presented in a tabular format in Tables 4.23, 4.24, and 4.25 for television receivers, VCR's, and cable converters, respectively. The tables contain both the measured receiver image rejection and the resultant equivalent D/U signal ratio referenced to the receiver input.

---

[1]The average rejection value may be understated due to the fact that in certain receivers, the resultant baseband interference signal was below the noise floor of the EUT. In this case, a rejection value corresponding to an interfering signal equal to the noise floor of the EUT was used in the calculation of the average rejection.

TABLE 4.20
UPPER ADJACENT CHANNEL VIDEO CARRIER REJECTION TEST RESULTS

TELEVISION RECEIVERS

SAMPLE	CHANNEL 3		CHANNEL 12		CHANNEL 53		CHANNEL 74	
NO.	REJ.	D/U	REJ.	D/U	REJ.	D/U	REJ.	D/U
001	71.2	68.2	71.8	68.8	> 68.9	> 65.9	> 61.3	> 58.3
002	73.2	70.2	68.3	65.3	71.7	68.7	72.3	69.3
003	> 78.0	> 75.0	> 77.5	> 74.5	> 77.5	> 74.5	> 77.3	> 74.3
004	> 77.2	> 74.2	> 71.8	> 68.8	> 81.3	> 78.3	*	*
005	> 75.7	> 72.7	> 70.8	> 67.8	> 69.4	> 66.4	> 69.8	> 66.8
006	> 79.2	> 76.2	> 79.0	> 76.0	> 76.9	> 73.9	> 76.3	> 73.3
007	> 78.2	> 75.2	75.8	72.8	> 78.4	> 75.4	> 72.8	> 69.8
008	> 79.2	> 76.2	> 78.3	> 75.3	> 80.9	> 77.9	79.8	76.8
009	> 78.7	> 75.7	> 75.8	> 72.8	> 74.4	> 71.4	> 74.3	> 71.3
010	> 76.0	> 73.0	> 74.0	> 71.0	> 75.9	> 72.9	> 73.0	> 70.0
011	> 76.7	> 73.7	76.8	73.8	76.4	73.4	> 76.3	> 73.3
012	73.2	70.2	70.8	67.8	69.4	66.4	69.8	66.8
013	50.7	47.7	60.8	57.8	63.9	60.9	53.3	50.3
014	> 80.2	> 77.2	> 78.8	> 75.8	> 75.4	> 72.4	> 76.3	> 73.3
015	> 75.2	> 72.2	> 79.8	> 76.8	> 75.9	> 72.9	> 74.3	> 71.3
016	> 75.2	> 72.2	> 77.3	> 74.3	> 73.9	> 70.9	> 75.3	> 72.3
017	> 73.7	> 70.7	> 73.8	> 70.8	> 68.4	> 65.4	> 70.8	> 67.8
018	77.7	74.7	76.3	73.3	> 78.4	> 75.4	75.8	72.8
019	> 80.2	> 77.2	> 78.3	> 75.3	> 77.9	> 74.9	> 78.3	> 75.3
020	> 79.2	> 76.2	> 77.8	> 74.8	> 78.4	> 75.4	> 76.3	> 73.3
021	67.2	64.2	71.8	68.8	70.9	67.9	65.8	62.8
022	> 79.2	> 76.2	> 79.3	> 76.3	> 77.9	> 74.9	> 78.3	> 75.3
023	75.2	72.2	> 77.3	> 74.3	> 72.4	> 69.4	> 73.3	> 70.3
024	> 76.2	> 73.2	78.3	75.3	> 77.4	> 74.4	> 76.3	> 73.3
025	75.2	72.2	71.8	68.8	74.9	71.9	> 72.8	> 69.8
026	> 77.7	> 74.7	73.8	70.8	> 75.4	> 72.4	> 74.3	> 71.3
027	> 77.7	> 74.7	> 76.8	> 73.8	> 78.9	> 75.9	> 76.3	> 73.3
028	> 75.2	> 72.2	> 78.3	> 75.3	> 75.9	> 72.9	> 76.3	> 73.3
029	> 74.2	> 71.2	> 75.1	> 72.1	> 71.9	> 68.9	> 74.3	> 71.3
030	> 78.7	> 75.7	> 79.8	> 76.8	> 78.9	> 75.9	> 79.8	> 76.8
031	> 80.2	> 77.2	> 78.3	> 75.3	> 78.9	> 75.9	> 78.8	> 75.8
032	> 76.2	> 73.2	> 74.3	> 71.3	> 77.9	> 74.9	> 77.3	> 74.3
033	> 78.2	> 75.2	> 76.8	> 73.8	> 74.9	> 71.9	> 75.3	> 72.3
034	> 77.2	> 74.2	> 77.8	> 74.8	> 75.9	> 72.9	73.3	70.3
035	> 73.2	> 70.2	> 74.3	> 71.3	> 77.9	> 74.9	> 75.3	> 72.3

NOTE: A "greater than" symbol (>) indicates rejection or D/U ratio is greater than the value to the right of the symbol.
** Test sample did not tune to this channel.*

Level exceeds "just perceptible" interference threshold.

TABLE 4.21
UPPER ADJACENT CHANNEL
VIDEO CARRIER REJECTION
TEST RESULTS

VIDEO CASSETTE RECORDERS

SAMPLE	CHANNEL 3		CHANNEL 12		CHANNEL 53		CHANNEL 74	
NO.	REJ.	D/U	REJ.	D/U	REJ.	D/U	REJ.	D/U
101	> 73.7	> 70.7	> 72.8	> 69.8	> 72.9	> 69.9	> 71.3	> 68.3
102	70.7	67.7	> 71.3	> 68.3	> 69.9	> 66.9	> 67.3	> 64.3
103	> 75.2	> 72.2	> 73.3	> 70.3	> 76.9	> 73.9	> 73.3	> 70.3
104	> 75.2	> 72.2	> 76.8	> 73.8	> 77.4	> 74.4	> 75.3	> 72.3
105	> 77.2	> 74.2	> 74.8	> 71.8	> 74.9	> 71.9	> 74.3	> 71.3
106	> 75.2	> 72.2	> 74.8	> 71.8	> 75.9	> 72.9	> 71.3	> 68.3
107	> 77.2	> 74.2	> 76.8	> 73.8	> 77.9	> 74.9	> 71.3	> 68.3
108	74.2	71.2	73.8	70.8	> 74.9	> 71.9	> 72.8	> 69.8

NOTE: A "greater than" symbol (>) indicates rejection or D/U ratio is greater than the value to the right of the symbol.

TABLE 4.22
UPPER ADJACENT CHANNEL
VIDEO CARRIER REJECTION
TEST RESULTS

CABLE CONVERTERS

SAMPLE	CHANNEL 3		CHANNEL 12		CHANNEL 53		CHANNEL 74	
NO.	REJ.	D/U	REJ.	D/U	REJ.	D/U	REJ.	D/U
201	> 71.2	> 68.2	> 74.3	> 71.3	> 72.4	> 69.4	> 73.8	> 70.8
203	> 73.7	> 70.7	> 76.8	> 73.8	78.4	75.4	*	*
204	> 75.7	> 72.7	> 74.8	> 71.8	> 75.9	> 72.9	*	*
206	> 65.2	> 62.2	> 68.8	> 65.8	> 70.9	> 67.9	> 70.3	> 67.3
208	> 76.2	> 73.2	> 75.3	> 72.3	*	*	*	*
209	72.2	69.2	71.8	68.8	74.4	71.4	71.3	68.3
212	> 75.7	> 72.7	> 73.3	> 70.3	> 72.9	> 69.9	> 71.3	> 68.3
214	> 73.7	> 70.7	> 72.3	> 69.3	> 75.9	> 72.9	> 74.8	> 71.8
216	> 79.2	> 76.2	> 76.8	> 73.8	> 79.9	> 76.9	> 77.3	> 74.3
218	> 63.6	> 60.6	> 72.8	> 69.8	> 74.9	> 71.9	> 71.8	> 68.8
220	69.2	66.2	> 75.3	> 72.3	> 76.9	> 73.9	> 74.3	> 71.3
222	> 73.2	> 70.2	> 73.8	> 70.8	> 73.9	> 70.9	> 74.3	> 71.3
224	> 71.7	> 68.7	> 72.3	> 69.3	> 69.9	> 66.9	*	*

NOTE: A "greater than" symbol (>) indicates rejection or D/U ratio is greater than the value to the right of the symbol.
** Test sample did not tune to this channel.*

TABLE 4.23
IMAGE REJECTION
TEST RESULTS

TELEVISION RECEIVERS

SAMPLE	CHANNEL 3		CHANNEL 12		CHANNEL 53		CHANNEL 74	
NO.	REJ.	D/U	REJ.	D/U	REJ.	D/U	REJ.	D/U
001	> 84.1	> 71.1	75.5	62.5	63.1	50.1	60.6	47.6
002	74.6	61.6	78.5	65.5	72.1	59.1	67.6	54.6
003	> 85.1	> 72.1	78.5	65.5	87.1	74.1	68.0	55.0
004	81.1	68.1	73.5	60.5	57.1	44.1	*	*
005	68.1	55.1	64.5	51.5	69.1	56.1	62.1	49.1
006	78.1	65.1	76.5	63.5	76.1	63.1	83.6	70.6
007	80.6	67.6	71.5	58.5	75.1	62.1	64.1	51.1
008	85.1	72.1	74.0	61.0	73.1	60.1	64.6	51.6
009	78.1	65.1	62.5	49.5	62.6	49.6	76.6	63.6
010	76.1	63.1	68.5	55.5	72.1	59.1	69.6	56.6
011	> 84.1	> 71.1	78.5	65.5	70.6	57.6	69.1	56.1
012	84.1	71.1	69.0	56.0	72.1	59.1	63.6	50.6
013	> 85.6	> 72.6	81.5	68.5	71.6	58.6	78.6	65.6
014	> 82.6	> 69.6	73.0	60.0	71.1	58.1	76.1	63.1
015	85.1	72.1	77.9	64.9	74.1	61.1	81.6	68.6
016	80.1	67.1	73.5	60.5	63.6	50.6	66.1	53.1
017	> 83.1	> 70.1	> 82.5	> 69.5	> 79.1	> 66.1	67.6	54.6
018	> 86.6	> 73.6	67.5	54.5	78.6	65.6	77.6	64.6
019	> 86.1	> 73.1	66.0	53.0	76.6	63.6	70.1	57.1
020	78.1	65.1	83.0	70.0	62.6	49.6	58.7	45.7
021	> 86.1	> 73.1	77.2	64.2	71.1	58.1	59.6	46.6
022	77.6	64.6	74.0	61.0	49.1	36.1	58.2	45.2
023	> 85.1	> 72.1	74.5	61.5	69.6	56.6	65.1	52.1
024	> 84.6	> 71.6	> 85.5	> 72.5	> 83.6	> 70.6	> 84.6	> 71.6
025	78.1	65.1	71.5	58.5	49.1	36.1	58.1	45.1
026	80.1	67.1	66.0	53.0	71.1	58.1	67.6	54.6
027	77.7	64.7	72.5	59.5	47.6	34.6	55.1	42.1
028	> 84.1	> 71.1	68.5	55.5	74.1	61.1	82.6	69.6
029	83.5	70.5	77.6	64.6	60.1	47.1	61.6	48.6
030	84.6	71.6	65.5	52.5	56.1	43.1	51.6	38.6
031	85.1	72.1	68.5	55.5	58.6	45.6	55.6	42.6
032	> 82.1	> 69.1	69.0	56.0	50.1	37.1	53.6	40.6
033	81.1	68.1	72.5	59.5	> 81.1	> 68.1	74.6	61.6
034	81.1	68.1	75.5	62.5	> 85.1	> 72.1	64.6	51.6
035	82.1	69.1	78.5	65.5	56.6	43.6	> 78.6	> 65.6

NOTE: A "greater than" symbol (>) indicates rejection or D/U ratio is greater than the value to the right of the symbol.
** Test sample did not tune to this channel.*

Level exceeds "just perceptible" interference threshold.

TABLE 4.24
IMAGE REJECTION
TEST RESULTS

VIDEO CASSETTE RECORDERS

SAMPLE	CHANNEL 3		CHANNEL 12		CHANNEL 53		CHANNEL 74	
NO.	REJ.	D/U	REJ.	D/U	REJ.	D/U	REJ.	D/U
101	> 80.1	> 67.1	67.5	54.5	74.1	61.1	66.1	53.1
102	> 81.1	> 68.1	74.5	61.5	66.1	53.1	56.6	43.6
103	80.1	67.1	64.0	51.0	60.1	47.1	53.6	40.6
104	> 71.6	> 58.6	75.0	62.0	75.1	62.1	65.6	52.6
105	77.1	64.1	68.5	55.5	67.1	54.1	64.6	51.6
106	78.1	65.1	75.5	62.5	57.1	44.1	47.6	34.6
107	> 83.1	> 70.1	> 81.5	> 68.5	56.6	43.6	46.6	33.6
108	> 82.1	> 69.1	78.5	65.5	75.1	62.1	72.6	59.6

NOTE: A "greater than" symbol (>) indicates rejection or D/U ratio is greater than the value to the right of the symbol.
Level exceeds "just perceptible" interference threshold.

TABLE 4.25
IMAGE REJECTION
TEST RESULTS

CABLE CONVERTERS

SAMPLE	CHANNEL 3		CHANNEL 12		CHANNEL 53		CHANNEL 74	
NO.	REJ.	D/U	REJ.	D/U	REJ.	D/U	REJ.	D/U
201	80.1	67.1	83.0	70.0	83.1	70.1	60.1	47.1
203	> 75.1	> 62.1	76.5	63.5	77.1	64.1	*	*
204	> 81.6	> 68.6	> 82.0	> 69.0	> 84.1	> 71.1	*	*
206	75.1	62.1	70.0	57.0	61.1	48.1	58.1	45.1
208	> 80.1	> 67.1	> 77.5	> 64.5	*	*	*	*
209	> 79.6	> 66.6	> 82.5	> 69.5	> 82.1	> 69.1	> 81.5	> 68.5
212	> 83.6	> 70.6	79.5	66.5	84.6	71.6	> 82.6	> 69.6
214	> 81.1	> 68.1	> 84.0	> 71.0	> 84.1	> 71.1	> 83.1	> 70.1
215	> 82.1	> 69.1	> 83.5	> 70.5	> 84.6	> 71.6	> 82.6	> 69.6
216	> 79.1	> 66.1	> 78.5	> 65.5	> 79.1	> 66.1	> 78.6	> 65.6
218	83.1	70.1	82.5	69.5	83.1	70.1	> 82.6	> 69.6
220	> 83.1	> 70.1	> 83.5	> 70.5	> 83.1	> 70.1	#	#
222	> 81.1	> 68.1	> 79.5	> 66.5	> 82.1	> 69.1	> 79.1	> 66.1
224	> 80.1	> 67.1	> 81.5	> 68.5	> 72.1	> 59.1	*	*

NOTE: A "greater than" symbol (>) indicates rejection or D/U ratio is greater than the value to the right of the symbol.
** Indicates that the test sample did not tune to this channel.*
 # VM 700A television measurement set would not lock on to video baseband signal when image carrier was present.

Level exceeds "just perceptible" interference threshold.

As was the case in the previous section, the use of the "greater than" symbol (>) in the tables indicates that the rejection or D/U signal ratio is greater than the value to the right of the symbol. Shading is used in the tables to highlight receiver performance which results in "just perceptible" or greater interference in the received picture. A D/U signal ratio of 55 dB is assumed to be the "just perceptible" interference threshold.

The image rejection tests were performed with the desired video carrier level set to 0 dBmV and the image video carrier level set to +13 dBmV. The desired aural carrier level was set to -10 dBmV.

A review of Table 4.23 indicates that image rejection performance in television receivers is highly dependent on the selected channel. On channel 3, average rejection was found to be 82.4 dB[1], while on channel 74, the average image rejection was 72.2 dB[1]. The variation in image rejection performance is more pronounced in the number of receivers which experienced "just perceptible" or greater interference. None of the television receivers exhibited interference levels greater than the "just perceptible" threshold on channel 3, and only six experienced interference greater than the threshold on channel 12. This number increased to thirteen receivers (37% of the test samples) on channel 53 and twenty-one receivers (60% of the test samples) on channel 74.

Eight of the receivers exhibited an interference level, on at least one channel, which was greater than 10 dB above the "just perceptible" interference threshold when subjected to the maximum allowable image carrier level. The worst performing television receiver experienced an interference level which was more than 20 dB above the "just perceptible" level.

Image rejection performance for VCR's is presented in Table 4.24. As was the case with television receivers, VCR performance in this category is highly dependant on the selected channel. The average image rejection on channel 3 was 79.7 dB[1], while the average rejection on channel 74 was 63.1 dB.

The number of test samples which experienced "just perceptible" or greater interference ranged from none on channel 3 to seven out of the eight receivers on channel 74. Four of the VCR's experienced interference levels greater than 10 dB above the "just perceptible" interference level. The worst performing VCR exhibited an interference level 21.4 dB above the "just perceptible" level.

---

[1]The average rejection value may be understated due to the fact that in certain receivers, the resultant baseband interference signal was below the noise floor of the EUT. In this case, a rejection value corresponding to an interfering signal equal to the noise floor of the EUT was used in the calculation of the average rejection.

Image rejection performance for cable converters is presented in Table 4.25. Two of the thirteen cable converters exhibited image interference above the "just perceptible" interference threshold when subjected to the maximum allowable image carrier level. The worst performing cable converter exhibited an interference level 9.9 dB greater than the "just perceptible" level.

Because the resultant baseband interfering signal was below the EUT noise floor, in the majority of the test samples, an average rejection is not calculated. It can be stated, however, that image rejection is greater than 80 dB in the majority of the cable converters tested. The significantly better performance of cable converters in this category is largely due to the fact that double frequency conversion is employed in most, if not all, of the converters tested.

4.5.8 Tuner Overload Test Results

Tuner overload tests were performed on each of the 56 test samples in accordance with the test procedures contained in Section 4.4.9. The desired channel video carrier was set to a level of +15 dBmV, and the desired aural carrier was set to a level of +5 dBmV. The video carrier was modulated with a 10 IRE flat field modulation, and the aural carrier was unmodulated. The desired channel was offset downward in frequency by 80 kHz.

A Matrix generator was used to simulate other video carriers which are delivered by a cable system. All video carriers (between 54 and 550 MHz) were activated on the Matrix generator and input to the EUT, with the exception of the desired video carrier and the image video carrier. The simulated video carriers generated by the Matrix generator were unmodulated and set to a level of +15 dBmV.

The baseband video spectrum of the EUT was observed, using a Tektronix Model VM 700A television measurement set, to determine whether or not specific interfering signals were present, associated with Composite Triple Beat (CTB) products and Composite Second Order (CSO) products. An interfering signal resulting from CTB products will normally appear in the baseband spectral display at 0.0 MHz; however, because the desired channel is frequency offset, the actual frequency of the CTB interfering signal appears at .08 MHz. Similarly, CSO products at .75 MHz and 1.25 MHz appear at .83 MHz or 1.33 MHz in the baseband spectral display.

For each EUT, the spectrum at these three frequencies was observed to determine if a CTB or CSO interfering signal was present. If an interfering signal was present at these frequencies, the level of the interfering signal was measured and, using the signal substitution method, an equivalent in-band interfering signal

level at the input to the EUT was determined. In addition, all other interfering signals which were present in the baseband video spectrum were also measured in a similar manner.

The tuner overload test results are presented in a tabular format in Tables 4.26, 4.27, and 4.28 for television receivers, VCR's, and cable converters, respectively. The test results are presented in terms of an equivalent D/U signal ratio referenced to the input port of the EUT. For each test sample and each test channel, four equivalent D/U signal ratios are presented. The equivalent D/U ratios corresponding to CTB and CSO products are presented in the first three columns, and the equivalent D/U ratio corresponding to the highest other interfering signal observed in the baseband spectrum is presented in the last column. An asterisk (*) is used where the specific CTB or CSO interfering signal was below the noise floor of the EUT or where there were no other interfering signals which exceeded the noise floor of the EUT.

As was the case for adjacent channel and image interference, shading is used in the tables to highlight receiver performance which results in "just perceptible" or greater interference in the received picture. A D/U signal ratio of 55 dB, referenced to the input of the EUT, is assumed to be the "just perceptible" interference threshold.

4.5.8.1 Television Receiver Tuner Overload Test Results

Table 4.26 presents the tuner overload test results for television receivers. Twenty-three of the thirty-five television receivers exhibited interference at or above the "just perceptible" threshold level on at least one of the test channels and in at least one interfering category.

Thirteen television receivers exhibited CTB interference which was above the threshold level on at least one channel. Although there are more CTB products created on channels near the middle of the cable band, the number of receivers experiencing "just perceptible" or greater interference was greatest on the highest test channel. This might indicate that the selectivity of the RF filtering in some receivers is less on the higher channels, and/or that there exists greater nonlinearity in RF amplifier performance at the higher frequencies. The highest CTB interference level resulted in an equivalent D/U ratio of 41 dB at the input to the EUT or 14 dB above the "just perceptible" interference threshold.

Seventeen of the thirty-five television receivers exhibited CSO interference at levels equal to or greater than the "just perceptible" interference threshold on at least one test channel. The number of CSO products is greatest near the bottom and near the top of the cable band. This characteristic is demonstrated by the

TABLE 4.26
TUNER OVERLOAD
TEST RESULTS
CHANNELS 3 AND 12

TELEVISION RECEIVERS

	CHANNEL 3 D/U SIGNAL RATIO				CHANNEL 12 D/U SIGNAL RATIO			
SAMPLE	CTB	CSO	CSO	HIGHEST	CTB	CSO	CSO	HIGHEST
NO.	0.0	0.75	1.25	OTHER	0.0	0.75	1.25	OTHER
001	*	63.5	*	54.7	*	*	*	66.5
002	*	52.9	*	55.9	61.4	67.4	64.4	65.4
003	*	68.5	*	64.5	*	*	*	*
004	*	66.5	*	68.0	61.5	*	70.5	69.5
005	*	65.0	*	65.5	59.5	*	*	60.5
006	72.5	52.0	*	58.5	66.0	*	72.0	61.5
007	*	66.0	*	68.0	65.5	71.5	*	70.0
008	71.5	61.0	*	66.5	67.0	*	*	*
009	*	68.5	*	70.0	59.5	*	*	*
010	*	69.0	*	72.5	58.5	*	*	*
011	67.0	67.0	*	69.5	59.5	*	*	69.0
012	69.5	56.5	*	59.0	54.0	68.5	62.5	54.0
013	*	56.7	*	42.7	63.2	*	69.7	62.2
014	67.0	54.0	*	62.0	58.5	62.5	72.0	56.5
015	*	58.0	78.5	62.5	60.0	71.0	65.5	68.5
016	*	65.5	*	70.0	*	71.5	71.5	63.0
017	*	58.0	72.0	64.5	*	*	*	68.0
018	*	68.0	*	67.0	69.5	*	*	70.0
019	*	69.5	*	70.0	69.5	*	*	*
020	*	54.5	*	58.5	62.0	72.0	65.0	68.5
021	*	59.5	57.5	40.0	77.1	*	69.0	50.5
022	*	55.5	*	58.5	64.0	71.5	68.5	67.0
023	*	60.5	*	66.0	*	73.0	*	68.0
024	*	85.4	*	88.5	69.5	*	70.0	69.5
025	67.0	49.0	*	55.5	56.0	69.0	67.5	62.0
026	*	65.0	*	61.5	64.0	*	71.0	63.5
027	*	56.0	*	61.5	65.0	70.5	68.5	68.5
028	*	70.0	*	69.5	*	*	72.0	63.5
029	*	63.5	*	66.5	67.0	68.0	69.5	*
030	*	69.5	*	72.0	62.0	66.0	64.5	70.5
031	72.0	69.0	*	69.5	65.0	66.0	65.5	70.0
032	*	71.0	*	71.0	69.5	69.5	*	70.0
033	*	67.0	*	69.5	64.0	68.0	64.5	70.5
034	70.5	64.0	*	66.5	60.5	64.5	63.5	65.5
035	*	64.0	*	66.5	65.0	*	68.0	65.5

** Baseband interfering signal is below the noise floor of the test sample.*

Level exceeds "just perceptible" interference threshold.

TABLE 4.26 (cont'd)
TUNER OVERLOAD
TEST RESULTS
CHANNELS 53 AND 74

TELEVISION RECEIVERS

	CHANNEL 53 D/U SIGNAL RATIO				CHANNEL 74 D/U SIGNAL RATIO			
SAMPLE	CTB	CSO	CSO	HIGHEST	CTB	CSO	CSO	HIGHEST
NO.	0.0	0.75	1.25	OTHER	0.0	0.75	1.25	OTHER
001	*	*	55.0	62.5	*	*	*	63.0
002	48.5	*	*	60.0	50.5	*	*	59.5
003	66.5	*	61.5	69.5	65.0	*	60.0	69.0
004	59.5	75.0	65.0	70.5	*	*	*	*
005	61.0	*	54.0	62.0	*	*	*	64.0
006	60.5	*	66.0	67.0	55.0	*	47.0	68.0
007	63.5	*	*	68.0	68.0	*	*	70.0
008	63.0	*	*	67.0	69.5	*	*	66.0
009	63.5	*	64.5	61.0	*	*	*	70.5
010	*	*	70.5	61.5	*	*	*	69.5
011	56.0	*	71.0	61.0	65.5	*	71.0	57.0
012	55.5	*	*	58.5	62.5	*	67.5	60.5
013	55.2	*	44.2	47.7	52.7	71.7	51.7	46.2
014	55.0	64.0	42.5	62.5	56.0	*	48.5	55.5
015	62.0	*	59.0	68.0	58.5	*	55.0	65.0
016	53.0	*	67.5	*	56.5	*	51.0	*
017	*	*	57.0	*	59.5	*	57.0	*
018	49.5	*	*	70.0	52.5	*	45.5	63.5
019	46.0	*	*	65.0	49.5	*	50.0	59.5
020	*	*	*	*	*	*	*	*
021	53.5	*	46.5	48.5	51.0	*	50.5	48.0
022	58.5	72.5	54.5	67.5	56.0	*	42.5	67.5
023	69.5	*	53.0	*	64.5	*	55.5	66.5
024	61.0	*	*	56.5	65.5	*	61.5	56.0
025	56.5	70.5	54.5	58.5	55.0	*	42.5	60.0
026	64.5	*	*	69.5	66.5	*	56.0	51.5
027	56.5	*	57.0	66.0	56.0	*	43.5	67.5
028	62.5	*	*	60.0	67.0	*	57.0	56.5
029	54.5	*	*	59.5	61.0	*	69.5	58.0
030	41.0	*	60.0	57.5	51.5	*	60.0	67.0
031	44.0	*	63.0	61.5	53.0	*	55.5	65.0
032	63.5	72.5	63.0	56.0	46.0	*	69.0	52.0
033	66.0	*	63.0	*	66.0	*	59.0	57.0
034	64.0	*	59.0	66.0	57.5	*	54.0	63.0
035	67.5	*	61.5	65.5	67.0	73.0	61.5	57.5

** Baseband interfering signal is below the noise floor of the test sample.*

Level exceeds "just perceptible" interference threshold.

TABLE 4.27
TUNER OVERLOAD
TEST RESULTS
CHANNELS 3 AND 12

VIDEO CASSETTE RECORDERS

	CHANNEL 3 D/U SIGNAL RATIO				CHANNEL 12 D/U SIGNAL RATIO			
SAMPLE	CTB	CSO	CSO	HIGHEST	CTB	CSO	CSO	HIGHEST
NO.	0.0	0.75	1.25	OTHER	0.0	0.75	1.25	OTHER
101	*	61.5	*	66.5	*	*	*	*
102	90.2	79.7	*	76.8	63.0	71.0	68.0	64.0
103	*	80.1	*	87.1	*	*	*	*
104	92.9	79.6	*	83.5	63.0	70.0	71.0	70.0
105	*	77.9	*	84.5	64.0	*	*	64.5
106	69.5	67.5	93.7	71.5	69.0	*	70.0	70.0
107	92.3	86.9	*	88.7	69.0	74.0	73.0	70.0
108	84.8	81.6	*	85.6	65.0	71.0	71.0	64.0

** Baseband interfering signal is below the noise floor of the test sample.*
Level exceeds "just perceptible" interference threshold.

TABLE 4.27 (cont'd)
TUNER OVERLOAD
TEST RESULTS
CHANNELS 53 AND 74

VIDEO CASSETTE RECORDERS

	CHANNEL 53 D/U SIGNAL RATIO				CHANNEL 74 D/U SIGNAL RATIO			
SAMPLE	CTB	CSO	CSO	HIGHEST	CTB	CSO	CSO	HIGHEST
NO.	0.0	0.75	1.25	OTHER	0.0	0.75	1.25	OTHER
101	60.5	*	69.5	60.5	61.0	*	70.0	70.0
102	51.5	*	72.5	55.5	42.0	*	67.0	53.0
103	56.5	*	*	*	57.0	*	50.0	*
104	63.5	*	72.5	62.5	67.0	*	74.0	66.0
105	57.0	*	71.5	65.0	60.0	*	53.0	71.5
106	64.5	*	64.5	68.5	73.0	*	61.0	*
107	65.5	*	63.5	71.5	61.0	*	57.0	68.0
108	55.5	*	65.5	61.5	57.0	*	43.0	64.0

** Baseband interfering signal is below the noise floor of the test sample.*
Level exceeds "just perceptible" interference threshold.

TABLE 4.28
TUNER OVERLOAD
TEST RESULTS
CHANNELS 3 AND 12

CABLE CONVERTERS

	CHANNEL 3 D/U SIGNAL RATIO				CHANNEL 12 D/U SIGNAL RATIO			
SAMPLE	CTB	CSO	CSO	HIGHEST	CTB	CSO	CSO	HIGHEST
NO.	0.0	0.75	1.25	OTHER	0.0	0.75	1.25	OTHER
201	56.5	*	*	58.5	*	*	*	61.5
203	*	69.0	*	70.5	65.0	*	*	64.0
204	68.5	68.5	*	63.0	*	69.5	62.5	70.0
206	*	*	*	62.5	*	*	*	*
208	70.0	*	*	57.5	*	70.5	65.5	60.5
209	*	*	*	63.0	*	*	*	64.5
212	*	*	*	61.0	*	*	*	62.0
214	*	64.5	*	58.0	*	*	62.5	64.0
215	55.5	*	53.0	*	*	*	64.5	64.5
216	*	66.0	*	73.5	71.5	66.5	62.5	73.5
218	*	*	*	61.5	*	*	*	63.5
220	*	67.0	*	67.5	*	*	67.0	66.5
222	*	67.5	*	*	65.5	67.5	65.0	*
224	68.0	68.0	*	62.0	48.0	65.0	51.5	58.5

** Baseband interfering signal is below the noise floor of the test sample.*
Level exceeds "just perceptible" interference threshold.

TABLE 4.28 (cont'd)
TUNER OVERLOAD
TEST RESULTS
CHANNELS 53 AND 74

CABLE CONVERTERS

	CHANNEL 53 D/U SIGNAL RATIO				CHANNEL 74 D/U SIGNAL RATIO			
SAMPLE NO.	CTB 0.0	CSO 0.75	CSO 1.25	HIGHEST OTHER	CTB 0.0	CSO 0.75	CSO 1.25	HIGHEST OTHER
201	*	*	*	*	*	*	*	62.0
203	*	66.5	65.5	*	#	#	#	#
204	92.3	89.7	83.9	85.7	#	#	#	#
206	*	*	60.0	51.5	*	*	*	49.0
208	#	#	#	#	#	#	#	#
209	*	*	*	63.0	*	*	66.5	63.5
212	*	*	*	62.5	*	*	*	62.5
214	*	67.0	60.0	63.5	*	*	63.5	58.0
215	*	*	85.5	79.4	*	*	60.5	54.5
216	94.0	92.7	85.3	95.5	70.5	*	59.0	72.5
218	*	*	66.5	62.5	*	*	65.5	68.0
220	67.5	*	64.5	68.5	68.0	*	60.5	*
222	*	*	57.5	*	65.0	*	57.5	*
224	41.5	59.0	44.5	60.5	#	#	#	#

* Baseband interfering signal is below the noise floor of the test sample.
# Cable Converter did not tune to this channel.
Level exceeds "just perceptible" interference threshold.

number of receivers experiencing CSO interference at or above the "just perceptible" threshold on the highest and lowest test channels, compared with the number experiencing interference on the two middle test channels. As was the case with CTB interference, it also appears that CSO tuner overload performance degrades at higher frequencies.

CSO products near the bottom of the cable band represent the difference in two carrier frequencies and appear at 0.75 MHz in the baseband spectrum, while CSO products near the top of the cable band represent the sum of two carrier frequencies and appear at 1.25 MHz in the baseband spectral display. This characteristic is evidenced in the table by comparing the number of measurable CSO products in each CSO column (0.75 and 1.25 MHz) for test channels 3 and 74. The highest CSO interference level resulted in an equivalent D/U ratio of 42.5 dB at the input to the EUT or 12.5 dB above the "just perceptible" interference threshold. Three receivers exhibited this degree of interference on at least one channel.

The majority of receivers exhibited one or more other interfering signals in the baseband spectrum as a result of nonlinear mixing of input and internal signals. Six of the receivers exhibited other interfering signals at levels which exceeded the "just perceptible" interference threshold on at least one channel. Interference levels in two of these receivers exceeded the "just perceptible" threshold level on all four channels. The highest interference level in this category resulted in an equivalent D/U ratio of 40 dB, or 15 dB greater than the "just perceptible" interference threshold.

4.5.8.2 VCR Tuner Overload Test Results

VCR tuner overload test results are presented in Table 4.27. On test channels 3 and 12, none of the eight VCR's tested experienced interference greater than the "just perceptible" threshold in any of the four categories. One VCR experienced CTB interference at levels greater than the threshold on channels 53 and 74, and three VCR's exhibited CSO interference levels greater than the "just perceptible" interference threshold on channel 74 only.

Although the majority of VCR's exhibited one or more other interfering signals in the baseband spectrum, as a result of nonlinear mixing of input and/or internal signals, in only one case was the level greater than the "just perceptible" threshold level.

The highest interfering level observed for the eight VCR's resulted in a D/U ratio of 42 dB which is 13 dB above the "just perceptible" threshold level.

4.5.8.3 Cable Converter Tuner Overload Test Results

Tuner overload test results for cable converters are presented in Table 4.28. Three of the thirteen cable converters experienced interference above the "just perceptible" interference threshold on at least one of the test channels. Cable converter No. 224 exhibited the highest levels of interference, experiencing both CTB and CSO interference on channels 12 and 53. The highest interference level for cable converters resulted in an equivalent D/U ratio of 41.5 dB or 14.5 dB above the "just perceptible" interference threshold.

[redacted]

5.0 Perceptibility Measurements

BRONWEN LINDSAY JONES
972 Boston Post Road
Darien, CT 06820

DIRECT PICK-UP INTERFERENCE

SUBJECTIVE TESTS

October 12, 1993

Telephone: (203) 655-3881 Fax: (203) 655-6386

Introduction and Background

In 1986, CBS Laboratories, in conjunction with the National Association of Broadcasters, performed a series of subjective interference tests. One was a *"just perceptible"* co-channel interference test (a repeat of the well known "W" curve) with undesired signals spaced at intervals of 500 kHz. The desired signals were on UHF channel 23 whose visual carrier is at 525.5 MHz. In another, two undesired, co-channel signals were located near the visual subcarrier (500 kHz above) and the color subcarrier (100 kHz below). For the co-channel luminance interference the *"just perceptible"* level was found to be 63.5 dB on pictures and 68.65 dB on a 50-IRE-unit grey field. Picture quality was judged to be *"acceptable"* when the D/U was 62 dB. For co-channel chrominance interference, the *"just perceptible"* level was 58 dB on pictures and 62dB on 50-IRE grey, while *"acceptable"* picture quality was at 56.5 dB (see attachment A). One conclusion drawn from this study was that any worsening of the D/U resulted in less than *"acceptable"* reception. There was a sharp transition (almost no range) from *"acceptable"* to *"unacceptable"*, unlike what happens with random noise. The range was only 1.5 dB between *"just perceptible"* and *"acceptable"* in both cases. Stated another way, just past the point at which the interference was perceived, it was quickly (i.e. in 2 to 3 dB) judged unacceptable.

This new subjective study of direct pickup (DPU) interference was designed to establish and describe some "anchor points" to ground the Carl T. Jones Corp. (CTJC) objective 55 dB D/U *"just perceptible"* level to contemporary viewer sensitivities and to add subjective definition to the CTJC "Figure of Merit". It was designed also as a cross-check on the previous work of CBS/NAB to determine if the findings change over time.

Test Procedure

The equipment, receiver type and orientation etc. for the present study are described in detail in the CTJC report. The viewers stood or were seated in front of a 27-inch color television receiver from the objective tests, at viewing ratios of five- and four-times picture height respectively. Ambient illuminance, per CCIR viewing specifications, was low with back-lighting behind the display and neutral grey/off-white walls.

The test method was similar to the ascending/descending approach which is used to determine thresholds of perception as in hearing testing. The viewers for this study, six expert observers from the industry, determined the *"just perceptible"* points using the descending direction. They reduced the level of interference from a clearly perceptible level until a consensus was reached that the DPU interference was *"just perceptible"*. After each four 50-dB C/N trials, the viewers were presented with a 55 dB D/U at each channel and frequency used by CTJC for their objective measurements, and asked to rate the interference on a graphic scale of the CCIR impairment terms. A total of 140 judgments was made.

The desired signal was a 50-IRE-unit grey field as it was in the 1986 CBS/NAB study. The desired signal level was held constant at 0 dBmV. The undesired signal was a conducted DPU interference at those levels and channels used by CTJC, incorporating three channels at two carrier-to-noise ratios. Four frequencies within the 6-MHz channels were examined: visual carrier (VC) +0.25 MHz, VC+0.75 MHz, VC+1.75 MHz, and VC+2.55 MHz, the final frequency being the one also used in the CTJC objective measurements at a D/U of 55 dB. The interference appears on the screen as patterns which transition from a "thumb-print" wavy line appearance to a "basket-weave" pattern. The visibility of a particular interfering pattern depends upon its relationship to the horizontal sync sidebands. Impairments falling on a sideband are most visible,

and those falling midway between sidebands are least visible. It was expected that the 43 dB C/N level would result in higher *"just perceptible"* interference levels (i.e. smaller D/Us) due to noise masking, i.e. the noise hiding the presence of the interference. If the desired signal is strong and clear, such as at 50-dB C/N, the interference should be seen at lower interference levels (i.e. larger D/Us).

Results

The results section of this report and the Figures are presented in terms of undesired-to-desired (U/D), the reciprocal of D/U, for ease of interpretation. This merely means that the values become negative; the actual numbers remain the same.

Figure 1 is the 1986 CBS/NAB "W" contour. The three curves represent a grey field, a still-test picture and a motion-test picture. Since only slight differences were found, the new DPU subjective tests used only a 50-IRE-unit grey field. In the former study the desired signal level was -55 dBm which is equivalent to -6.25 dBmV and produces a rather poor and noisy signal. The current study employed 0 dBmV which is better, but not noise free, and also, in an abbreviated test, +10 dBmV which provides a good, fairly strong, signal.

The test results for Channel 6, (VC at 83.25 MHz), are shown in Figure 2, plotted with the 1986 CBS/NAB 50-IRE-unit data for comparison. Channel 6 reception was tested with a desired signal level of 0 dBmV and C/Ns of 50 and 43 dB. On the 50-dB more noise-free display, the DPU interference is perceived at lower signal interference levels than when it is apparently masked by the noise at a C/N of 43 dB. In general, in the Channel 6 test, DPU is visible at higher levels than in the Channel 23 UHF co-channel interference test. The -55 dB U/D point at VC+2.55 MHz used for the CTJC objective tests is marked on the

display with a large dot. It was rated mid-way between *"Imperceptible"* and *"Perceptible but not Annoying"* on the graphic scale, the point where a true perception threshold would be expected to fall.

The test results for Channel 12, (VC at 205.25 MHz), are shown in Figure 3 along with the earlier 50-IRE-unit data. Channel 12 reception was also tested at 0 dBmV with C/Ns of 50 and 43 dB. There is very little difference between the noisy and noise-free displays. In general, the DPU is visible at about the same levels as it was in the earlier CBS/NAB tests. The -55 dB U/D point at VC+2.55 MHz used for the CTJC objective tests marked on the display with a large dot was rated just below *"Perceptible, but not Annoying"*.

The test results for Channel 78, (VC at 547.25 MHz), are shown in Figure 4. Channel 78 reception was also tested at 0 dBmV with C/Ns of 50 and 43 dB. On the more noise-free displays with 50-dB C/N, the DPU interference was again seen at lower levels than when it was masked by the 43-dB C/N. In general, the DPU is visible at about the same levels as the earlier study had found with the possible exception of VC+2.55 MHz which was not tested in the 1986 study. The -55 dB U/D point at VC+2.55 MHz used for the CTJC objective tests (marked on the display with a large dot) was rated just above *"Perceptible, but not Annoying"*.

The test results for Channels 6 and 12 with the desired signal level increased (i.e. improved) to +10 dBmV are presented in Figures 5 and 6. When looking at Channel 6, DPU interference was seen at lower levels at +10 than at 0 dBmV, presumably due to a freeing-from-masking effect. In general, the DPU interference is visible at about the same levels as the co-channel interference was in the earlier study. The -55 dB U/D point at VC+2.55 MHz used for the CTJC

objective tests was rated *"Slightly Annoying"* under these conditions for the same reason, i.e. a lack of masking in the better signals. This masking effect is not apparent on Channel 12, where DPU interference was seen at levels quite intermingled with the other data, and the -55 dB U/D point was rated just better than *"Perceptible, but not Annoying"*.

The graphic-scale ratings of the -55 dB U/D test points are shown in Figure 7. The levels of all the test conditions on each channel are summarized in Table 1.

Conclusions

Clearly viewer sensitivities to this interference at *"just perceptible"* do not shift over time as do viewer opinions of picture quality. This can be explained by the fact that visual thresholds are being tested, not subjective opinions. Visual systems are not changing; however, technology and viewer expectations are.

The conclusion that any worsening of the interference level beyond *"just perceptible"* results in less than *"acceptable"* reception was again observed by the viewers and experimenters. Perhaps because the interference shows up in such definite patterns, it becomes objectionable very quickly.

The -55 dB U/D (55 dB D/U) test points, when presented blind to the viewers, were generally rated *"perceptible, but not annoying"*. It is reasonable to assume that this is equivalent in meaning to *"just perceptible"*.

It has been clearly demonstrated once again that a D/U of 55 dB is a good nominal visual threshold value for use as a reference, yardstick and/or anchor point.

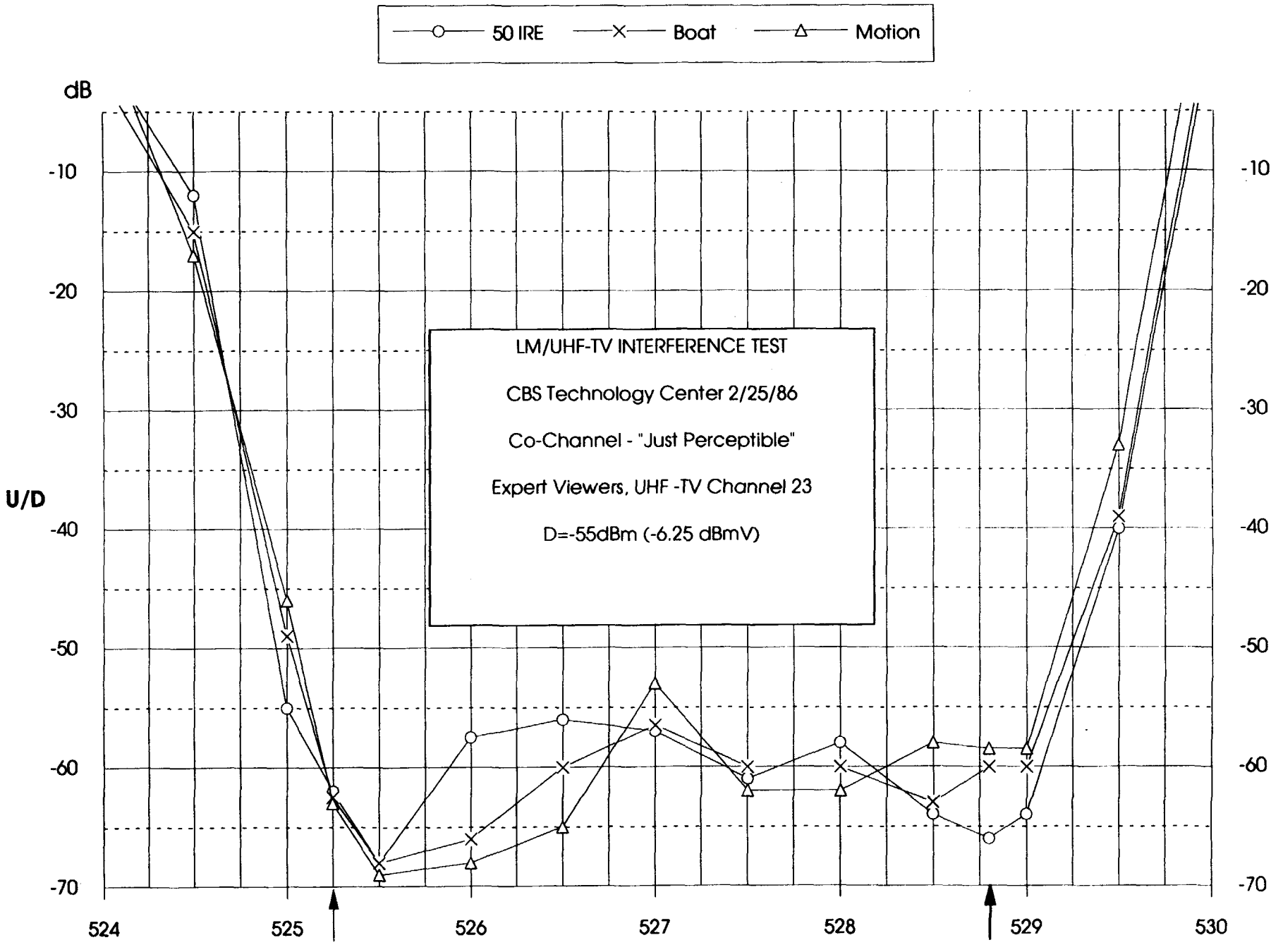
50 IRE
Boat
Motion
dB
U/D
-10
-20
-30
-40
-50
-60
-70
LM/UHF-TV INTERFERENCE TEST
CBS Technology Center 2/25/86
Co-Channel - "Just Perceptible"
Expert Viewers, UHF -TV Channel 23
D=-55dBm (-6.25 dBmV)
524
525
526
527
528
529
530
Visual Carrier
Color Subcarrier

Figure 1

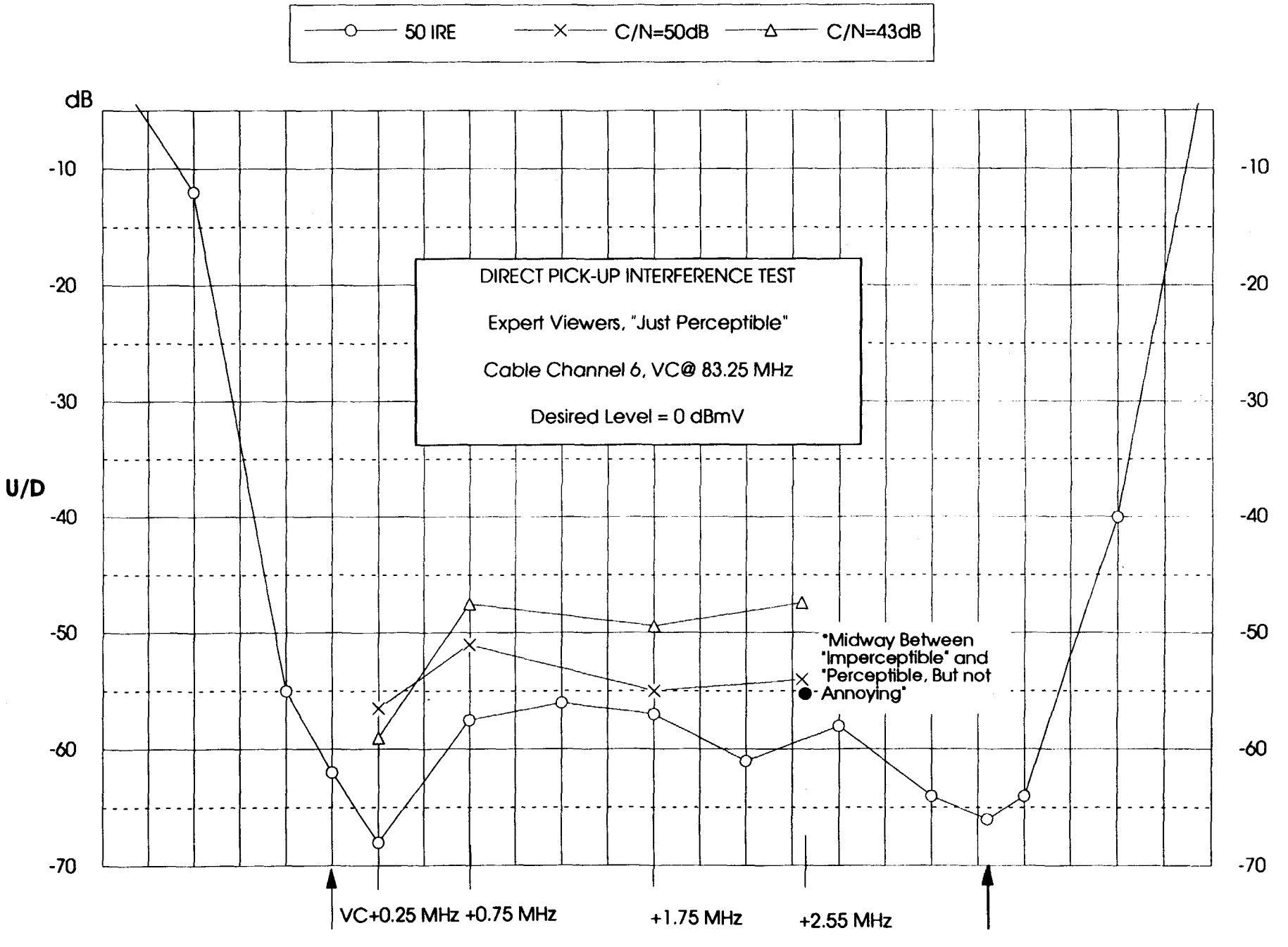
50 IRE
C/N=50dB
C/N=43dB
dB
U/D
-10
-20
-30
-40
-50
-60
-70
DIRECT PICK-UP INTERFERENCE TEST
Expert Viewers, "Just Perceptible"
Cable Channel 6, VC@ 83.25 MHz
Desired Level = 0 dBmV
*Midway Between "Imperceptible" and "Perceptible, But not Annoying"
VC+0.25 MHz
+0.75 MHz
+1.75 MHz
+2.55 MHz
Visual Carrier
Color Subcarrier

Figure 2

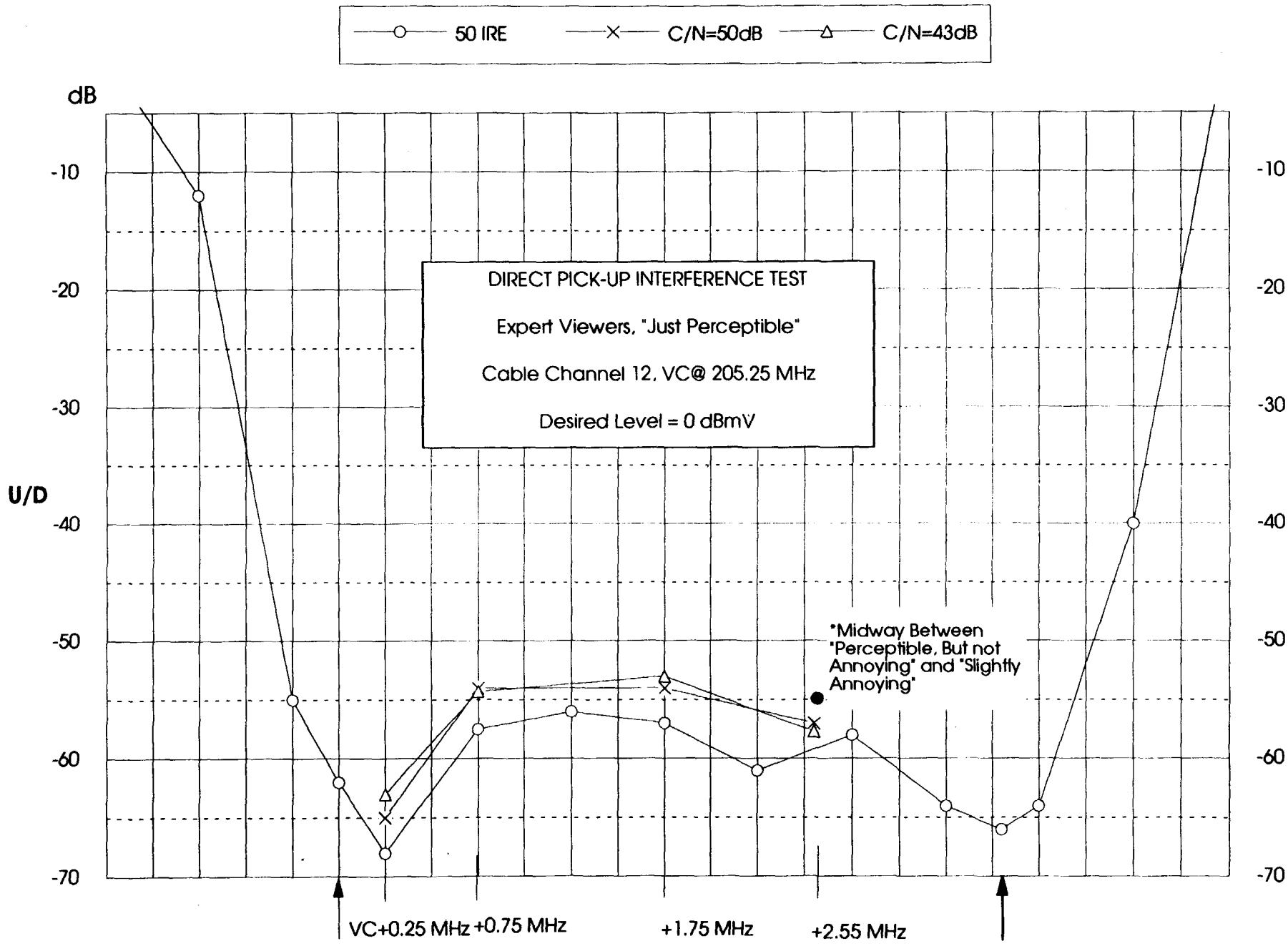
50 IRE
C/N=50dB
C/N=43dB
dB
U/D
-10
-20
-30
-40
-50
-60
-70
DIRECT PICK-UP INTERFERENCE TEST
Expert Viewers, "Just Perceptible"
Cable Channel 12, VC@ 205.25 MHz
Desired Level = 0 dBmV
*Midway Between "Perceptible, But not Annoying" and "Slightly Annoying"
VC+0.25 MHz
+0.75 MHz
+1.75 MHz
+2.55 MHz
Visual Carrier
Color Subcarrier

Figure 3

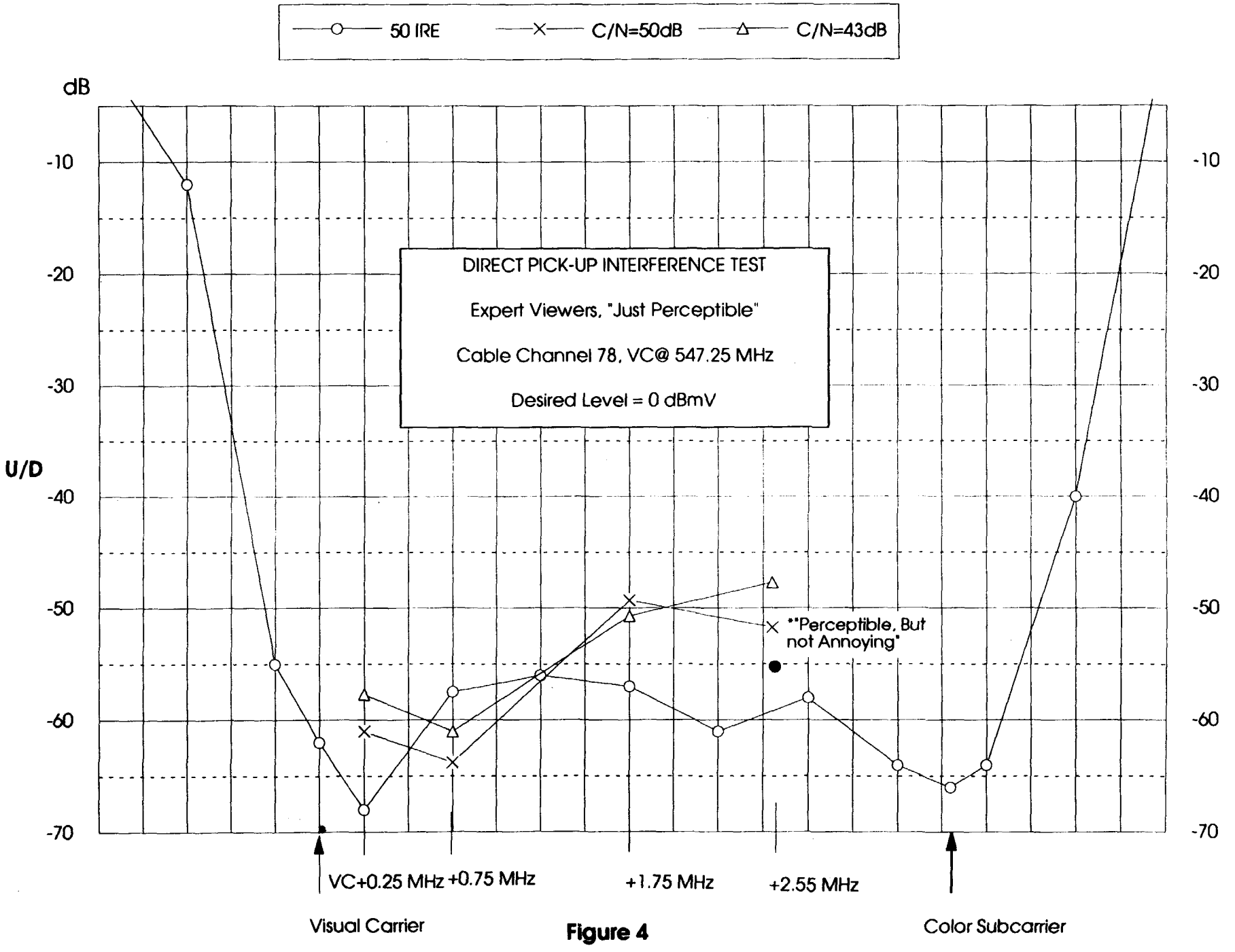
50 IRE
C/N=50dB
C/N=43dB
dB
U/D
-10
-20
-30
-40
-50
-60
-70
DIRECT PICK-UP INTERFERENCE TEST
Expert Viewers, "Just Perceptible"
Cable Channel 78, VC@ 547.25 MHz
Desired Level = 0 dBmV
**Perceptible, But not Annoying"
VC+0.25 MHz
+0.75 MHz
+1.75 MHz
+2.55 MHz
Visual Carrier
Color Subcarrier

Figure 4

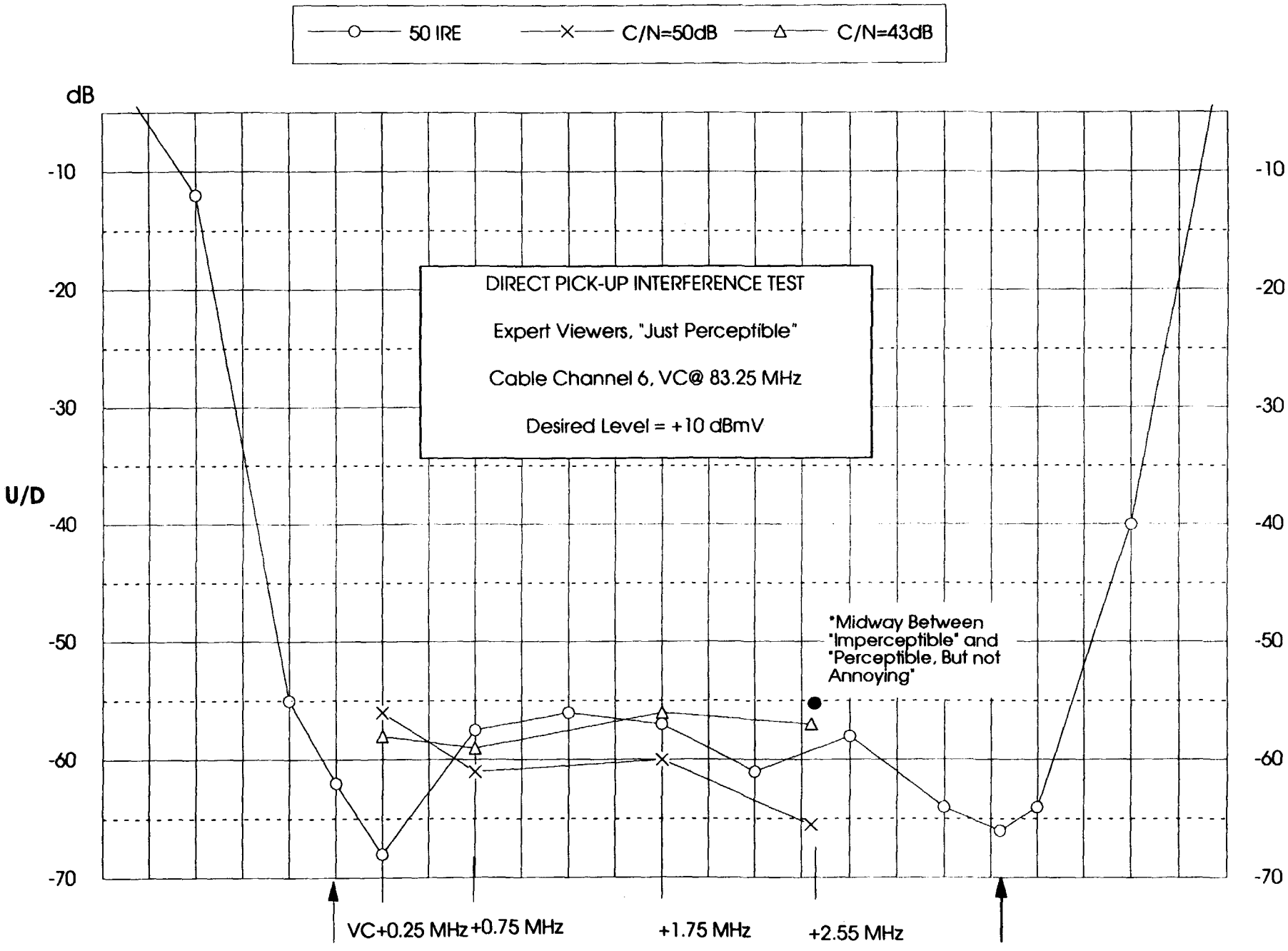
50 IRE
C/N=50dB
C/N=43dB
dB
U/D
-10
-20
-30
-40
-50
-60
-70
DIRECT PICK-UP INTERFERENCE TEST
Expert Viewers, "Just Perceptible"
Cable Channel 6, VC@ 83.25 MHz
Desired Level = +10 dBmV
*Midway Between "Imperceptible" and "Perceptible, But not Annoying"
VC+0.25 MHz
+0.75 MHz
+1.75 MHz
+2.55 MHz
Visual Carrier
Color Subcarrier

Figure 5

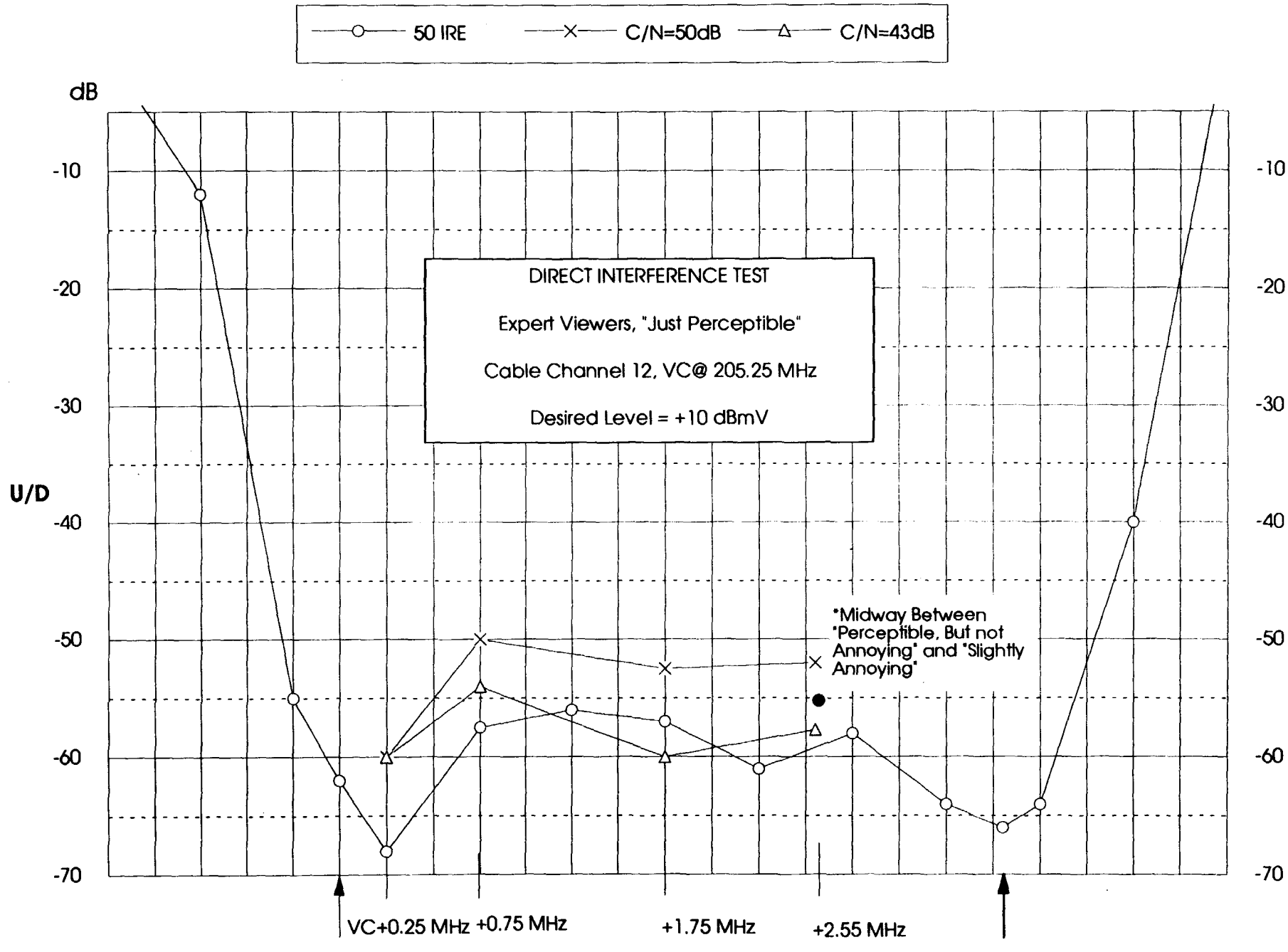
50 IRE
C/N=50dB
C/N=43dB
dB
U/D
-10
-20
-30
-40
-50
-60
-70
DIRECT INTERFERENCE TEST
Expert Viewers, "Just Perceptible"
Cable Channel 12, VC@ 205.25 MHz
Desired Level = +10 dBmV
*Midway Between "Perceptible, But not Annoying" and "Slightly Annoying"
VC+0.25 MHz
+0.75 MHz
+1.75 MHz
+2.55 MHz
Visual Carrier
Color Subcarrier

Figure 6

VIEWER RATING OF CTJC -55 dB TEST FRQUENCY
(C/N = 50 dB)

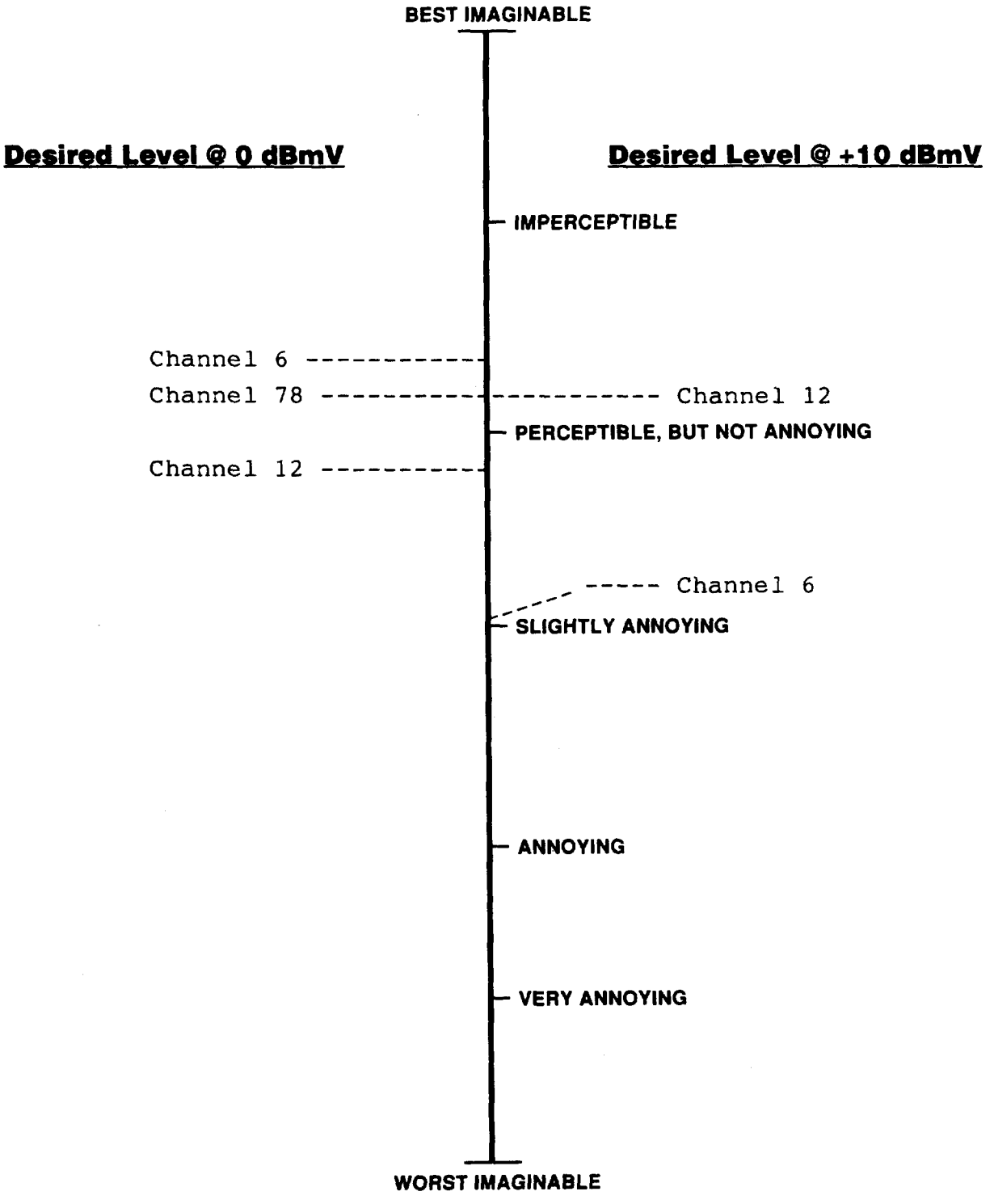

Figure 7

Frequency*	**Channel 6**		**Channel 12**		**Channel 78**
C/N = 50 dB		*+10 D*		*+10 D*	
VC+0.25,	-56.5 dB	*[56]*	-65 dB	*[60.5]*	-61 dB
VC+0.75,	-51	*[61]*	-54	*[54.5]*	-63.8
VC+1.75,	-55	*[60]*	-54	*[60]*	-49.3
VC+2.55,	-54	*[65.5]*	-57	*[56.5]*	-51.7
C/N = 43 dB					
VC+0.25,	-59	*[58]*	-63	*[60]*	-57.7
VC+0.75,	-47.5	*[59]*	-54.3	*[50]*	-61
VC+1.75,	-49.4	*[56]*	-53	*[53]*	-50.7
VC+2.55,	-47.4	*[57]*	-57.7	*[52]*	-47.7

* Visual Carrier (VC) of CH 6 @ 83.25 MHz
CH 12 @ 205.25 MHz
CH 78 @ 547.25 MHz

Desired Level = 0 dBmV except where italicized

Carrier to Noise (C/N) measured at the input to the receiver

TABLE 1: "JUST PERCEPTIBLE" IMPAIRMENT LEVELS

THRESHOLDS (Just Perceptible)

	Non-Expert	Expert
CO-LUMA	63	64.4
CO-CHROMA	57.8	58.6

Attachment A

6.0 Appendices

CARL T. JONES
CORPORATION

MITIGATING FACTORS

Carl T. Jones Corporation
7901 Yarnwood Court, Springfield, Virginia 22153-2899 (703) 569-7704 Fax: (703) 569-6417

Mitigating Factors

The FCC's F(50,50) propagation curves predict the field strength, at a given distance from a transmitting antenna, which will be received at 50% of the locations at least 50% of the time. The F(50,50) propagation curves were empirically derived, based on a large number of measurements performed on various television and radio broadcast stations throughout the United States. The F(50,50) propagation curves are based on outdoor receive locations and a receive antenna height nine meters above local ground level.

In evaluating the impact of DPU interference, it is desirable to predict the interfering field strength at the television receiver location. The receiver location is indoors and may be at a height different than the nine meter height used in the derivation of the F(50,50) curves. Further, the majority of DPU interference occurs in urban or suburban environments where there is a high density of manmade structures. These additional structures may act to attenuate the interfering signal to a greater extent than is predicted by the FCC's curves.

In this section, three mitigating factors are discussed: receiver height-gain, building attenuation, and urban and suburban clutter.

Receiver Height-Gain Factor

As was stated above, the FCC's F(50,50) curves are based on a receive antenna height of nine meters above local ground level. Since we are interested in determining the ambient field strength at the actual receiver height, it is desirable to establish a correction factor for receive heights other than nine meters. For example, a typical television receiver location on the first floor of a single family dwelling may be only two meters above local ground level. On the other hand, a receiver located on an upper floor of a high-rise apartment building may be at a height significantly greater than nine meters.

The ratio of two received field strengths, f_1 and f_2, measured at two different receive heights, h_1 and h_2, is referred to as the height-gain. Lee[1] presents empirically derived equations which express the height-gain, logarithmically, for a reference height, h_1, equal to three meters as follows:

---

[1]William C.Y. Lee, Mobile Communications Design Fundamentals (Indianapolis: Howard W. Sams & Co., 1986), 66-74; 220-221.

$$G_h = 10\log(h_2/3) \quad for\ h_2 < 3 \qquad (eq.\ 1)$$

and

$$G_h = 2h_2\log(h_2/3) \quad for\ 3 < h_2 < 10 \qquad (eq.\ 2)$$

where G_h = height-gain (dB)
h_2 = actual height of receiver (meters)

The height-gain equations above are graphically presented in Figure 1. In this graphic presentation, a receive height of nine meters has been chosen as the reference height to correspond with the receive antenna height used in the derivation of the F(50,50) curves. A linear relationship is used in the graph of for heights above 10 meters. The height-gain equation for heights above 10 meters can be expressed logarithmically as follows:

$$G_h = 20\log(h_2/10) \quad for\ h_2 > 10 \qquad (eq.\ 3)$$

The use of Figure 1 allows for the prediction of field strength at receiver heights other than nine meters by first determining the field strength at nine meters, through use of the F(50,50) curves, and then adding the height-gain correction factor for the actual height of the receiver. Note that the height-gain factor can be either positive or negative dependent on whether the actual receiver height is above or below nine meters. Should the height-gain correction factor result in a field strength value which exceeds the free space value, the free space value should be used.

Building Attenuation Factor

The F(50,50) propagation curves are based on outdoor receive locations; however, from a DPU interference standpoint, we are interested in the ambient field

strength at the indoor location of the television receiver. Building attenuation is a second mitigating factor which may result in a reduction in the predicted ambient field strength at the actual receiver location.

The results of several measurement programs, designed to quantify building attenuation, are reported in the literature. The attenuation is generally determined by first measuring the field strength of a transmitted signal at multiple locations just outside of the building under study, at ground level. The measurements are repeated at multiple locations inside of the building on one or more floors. The ratio of the average outside field strength to the average inside field strength is defined as the building attenuation. The building attenuation factor is typically expressed logarithmically.

Cox et al.[2] performed measurements in and around eight suburban homes to quantify attenuation to vertically polarized signals at a frequency of 800 MHz. A large number of measurements were made outside of each home, inside on the first and second floors, and in the basement. Regression analysis was used to analyze the data.

The findings of the study showed that the average building attenuation on the first floor was 5.5 dB, on the second floor -0.5 dB, and in the basement 14.3 dB. The negative attenuation or gain measured on the second floor indicates that the height-gain factor for measurements made on the second floor exceeded, on the average, the building attenuation factor.

Wells[3] reported on measurements of the average building attenuations for a large number of single family dwellings. The transmitting sources for these measurements were satellites having elevation angles between 36.1 and 55.4 degrees. These high elevation angles are similar to the condition of a dwelling in close proximity to a tall broadcast tower. At 860 MHz, the lowest frequency studied, the average attenuation to vertically polarized signals was 4.6 dB, and the average attenuation to horizontally polarized signals was 6.4 dB. These attenuation factors are in close agreement with the attenuation factor of 5.5 dB reported by Cox.

---

[2]D. C. Cox et al., "800-MHz Attenuation Measured In and Around Suburban Houses," AT&T Bell Laboratories Technical Journal, Vol. 63, No. 6 (July-August, 1984), 921-955.

[3]Paul I. Wells, "The Attenuation of UHF Radio Signals by Houses," IEEE Transactions on Vehicular Technology, Vol. VT-26, No. 4 (November, 1977), 358-362.

Smith[4] reported on measurements made of the attenuation of electric and magnetic fields by buildings over the frequency range from 20 kHz to 500 MHz. Smith developed a fitted attenuation curve for each building studied, which describes the building attenuation as a function of frequency.

Two single family detached residences were studied: Building 1 is described by Smith as having wood and brick exterior, and Building 2 is described as having aluminum siding exterior on the upper level and concrete block with brick veneer exterior on the lower level. For the frequencies between 50 MHz and 500 MHz (cable frequencies), the fitted curve for electric field attenuation for Building 1 ranged from approximately 0 dB to 7.5 dB. For Building 2, over the same frequency band, the electric field attenuation curve had a minimum value of 5.5 dB and a maximum value of 12.5 dB.

Walker[5] reports on building attenuations in three urban and eleven suburban multi-story office buildings in the greater Chicago metropolitan area. Attenuations in these buildings should be similar to that of multi-story apartment buildings. Measurements were performed in the 850 MHz cellular frequency band. Average building attenuation on the first floor of the urban buildings was found to be 18 dB, while the average attenuation on the first floor of the eleven suburban office buildings was 13.1 dB. The overall average attenuation for first floor location was 14.2 dB.

Walker reported further on the effect of the floor height-gain by plotting measured average attenuation versus building floor for the 14 buildings studied. A "least squares" straight line fit applied to the data resulted in a slope of 1.9 dB per floor. That is, the attenuation was found to decrease with increasing floor height at a rate of 1.9 dB per floor. The straight line fit intersects 0 dB attenuation between the sixth and seventh floors. This is the floor height at which the height-gain factor is equal but opposite to the building attenuation factor such that the average field strength within the building at this level is equal to the average field strength outside of the building at ground level.

---

[4]Albert A. Smith, Jr., "Attenuation of Electric and Magnetic Fields by Buildings," IEEE Transactions of Electromagnetic Compatibility, Vol. EMC-20, No. 3 (August, 1978), 411-418.

[5]E. H. Walker, "Penetration of Radio Signals into Buildings in the Cellular Radio Environment," The Bell System Technical Journal, Vol. 62, No. 9 (November, 1983), 2719-2734.

Rice[6] reports on measurements made in and around eleven multi-story office buildings in downtown New York City at 35 MHz and 150 MHz. The overall average attenuation on the first floor of the buildings studied was found to be 24 dB at 35 MHz and 22 dB at 150 MHz. Rice also provides a graph of building attenuation versus height above street level. Assuming a per floor height of 12 feet, the graph indicates that building attenuation decreases with increasing floor height at a rate of approximately 3 dB per floor between the second and tenth floors. The graph shows no decrease between the first and second floors. The straight line fit intersects 0 dB attenuation between the eighth and ninth floors, or two floors above the 0 dB intercept point found by Walker.

In summary, based on the literature, average building attenuations on the first floor of suburban homes ranged from 0 dB to 12.5 dB. In urban and suburban buildings, average building attenuations, for first floor locations, ranged from 13.1 dB to 24 dB. Further, the effect of building attenuation decreases with increasing floor height at a rate of between 1.9 dB and 3 dB per floor.

Urban and Suburban Clutter Factor

The high density of man-made structures in urban and suburban locations is known to increase path loss for mobile radio transmissions. A brief study was undertaken to evaluate whether or not an additional urban and/or suburban attenuation factor should be applied in predicting DPU interference levels.

Lee[1] presents a slope-intercept model for propagation in urban and suburban areas in the United States. Specific empirically derived parameter values are given for Philadelphia and Newark, as well as general parameter values for U.S. suburban areas. Based on this model, a graph of field strength versus distance was developed for the Philadelphia urbanized area (Figure 2) for a 100 KW ERP broadcast facility with an antenna height above average terrain of 305 meters (1,000 feet). This antenna height is typical for high powered television broadcast stations in the eastern United States.

For comparison purposes, two additional graphs of field strength versus distance are also shown in Figure 2; one graph is based on free space loss and the second graph is based on the FCC's F(50,50) propagation curves. Each of the three graphs is based on a receive antenna height of nine meters.

---

[6]L. P. Rice, "Radio Transmission into Buildings at 35 and 150 mc," The Bell System Technical Journal (January, 1959), 197-211.

Figure 2 indicates that Lee's urban propagation model predicts a slightly higher field strength than the FCC F(50,50) curves for distances less than two miles from the transmit antenna and a lower field strength for distances between 2 and 20 miles from the antenna. The greatest difference between the two graphs is approximately 4 dB. It should be pointed out that in deriving the urban field strength curve shown in Figure 2, the value of the model variable, n, was chosen to be 20 dB/decade which results in the lowest prediction of field strength. Lee indicates that this variable can range from 20 to 30 dB/decade. Selection of higher values of n can result in the predicted field strength being greater than the field strength predicted by the F(50,50) curves over the entire distance shown.

Based on the urban area slope-intercept model described by Lee, it appears that an additional attenuation factor of 0 to 4 dB may be appropriate for urban areas in the United States. No additional factor is recommended for suburban areas.

FIGURE 1

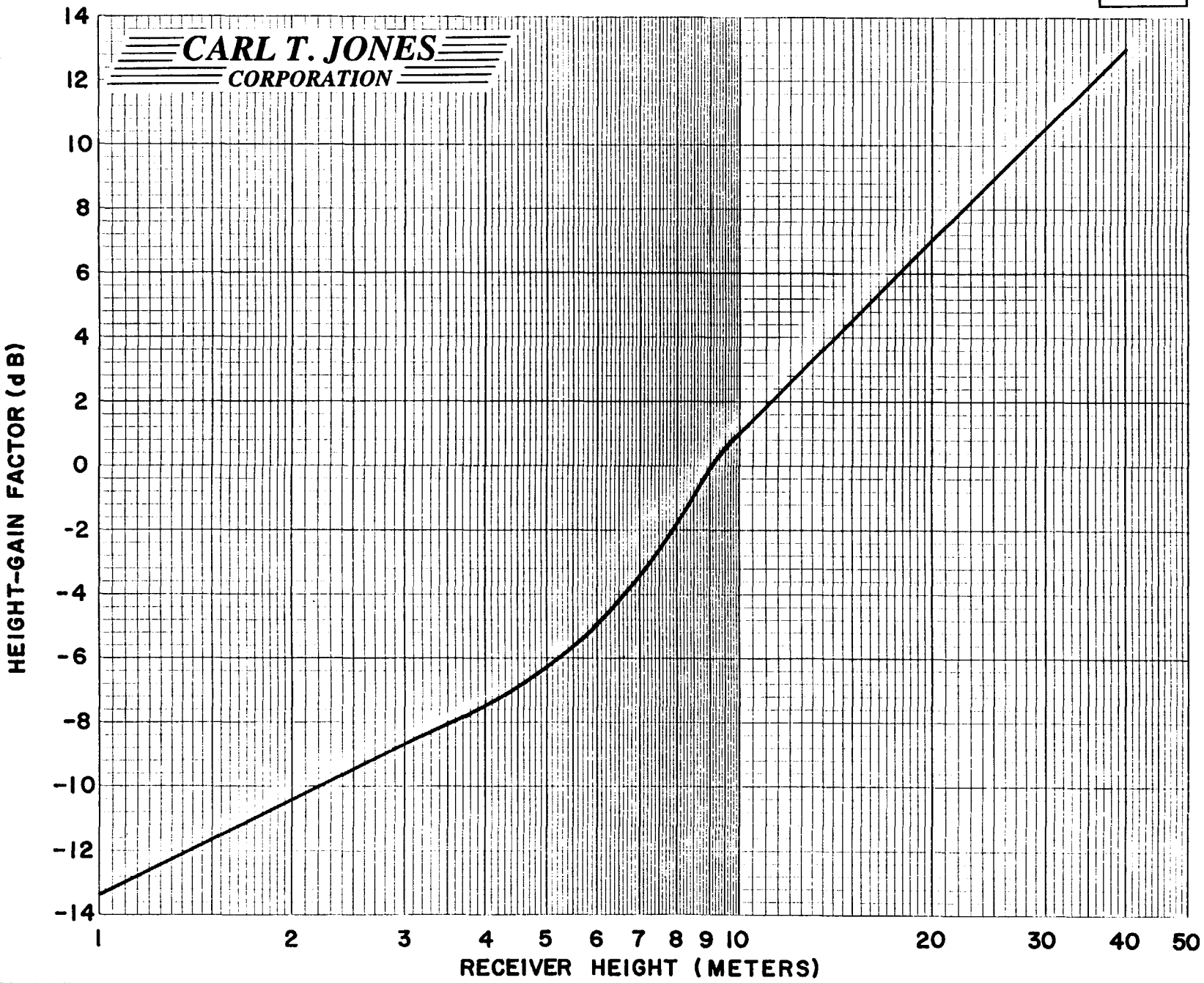
CARL T. JONES
CORPORATION
HEIGHT-GAIN FACTOR (dB)
14
12
10
8
6
4
2
0
-2
-4
-6
-8
-10
-12
-14
1
2
3
4
5
6
7
8
9
10
20
30
40
50
RECEIVER HEIGHT (METERS)

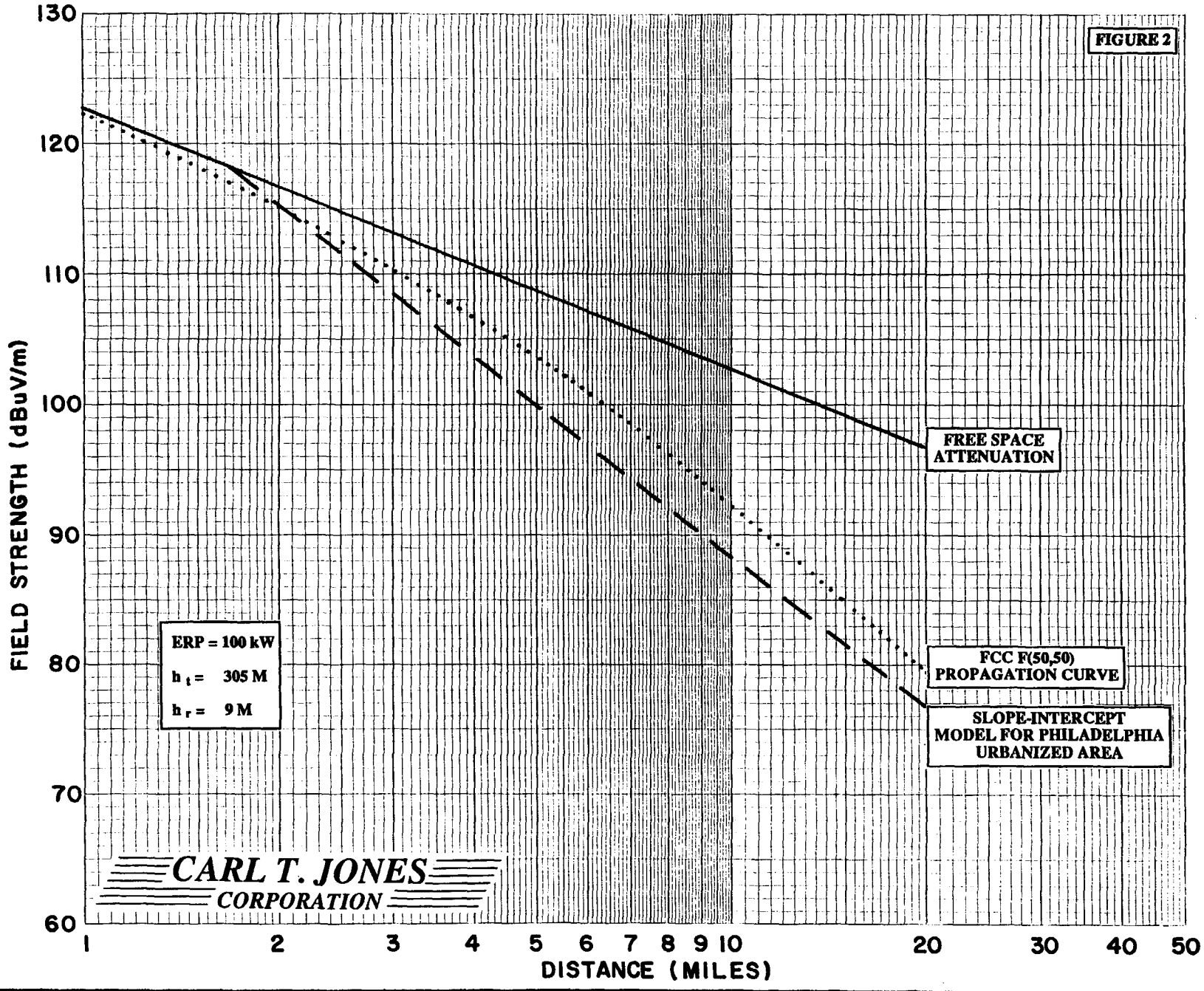
FIGURE 2
FIELD STRENGTH (dBuV/m)
130
120
110
100
90
80
70
60
1
2
3
4
5
6
7
8
9
10
20
30
40
50
DISTANCE (MILES)
FREE SPACE ATTENUATION
FCC F(50,50) PROPAGATION CURVE
SLOPE-INTERCEPT MODEL FOR PHILADELPHIA URBANIZED AREA
ERP = 100 kW
h t = 305 M
h r = 9 M
CARL T. JONES
CORPORATION

CARL T. JONES
CORPORATION

COMPILATION OF DETAILED DPU AND TUNER PERFORMANCE TEST DATA SHEETS

Carl T. Jones Corporation
7901 Yarnwood Court, Springfield, Virginia 22153-2899 (703) 569-7704 Fax: (703) 569-6417

TABLE OF CONTENTS

1.0 DIRECT PICKUP INTERFERENCE TESTING

1.1 DPU DATA SHEETS

2.0 TUNER PERFORMANCE TESTING

2.1 RE-RADIATION OF CABLE SIGNALS
2.2 LOCAL OSCILLATOR LEAKAGE AND BACKFEED
2.3 A/B SWITCH ISOLATION
2.3.1 NON-SELECTED TO SELECTED INPUT PORT ISOLATION
2.3.2 NON-SELECTED INPUT TO OUTPUT PORT ISOLATION
2.3.3 VCR INPUT TO OUTPUT PORT INTERNAL SWITCH ISOLATION
2.4 DPU BACKFEED
2.5 VCR THROUGH LOSS
2.6 ADJACENT CHANNEL REJECTION
2.7 IMAGE CHANNEL REJECTION
2.8 TUNER OVERLOAD

SECTION 1.0

DIRECT PICKUP INTERFERENCE TESTING

DATA SHEET
EUT #_____

DATE:_____ ENGINEER:_____

EUT MONITOR POINT: _____BASE-BAND, _____IF

TEST CHANNEL:_____

RADIATED SUSCEPTIBILITY

1. Configure the test configuration as shown in **Figure #4 and #7.** Ensure Generators are adjusted for 0 dBmV (TV video) and -55 dBmV (interference signal [IS]) at the EUT antenna input port.

   INITIAL SETTINGS:

   A. Generator #1 (TV) setting: _____ dBmV
   B. Generator #1 Frequency : _____ MHz
   C. Generator #2 (IS) setting: _____ dBmV
   D. Generator #2 Frequency : _____ MHz

2. Attach the IS monitor cable for the IF monitor or base-band monitor to the EUT. Allow 15 minutes for test system warm-up.

3. Adjust the Spectrum Analyzer to appropriate frequency band (for IF or base-band monitoring).

   ANALYZER SETTINGS:

   A. Resolution Bandwidth: _____ kHz
   B. Video Filtering : _____ Hz
   C. Reference Amplitude : _____ dBmV
   D. Start Frequency : _____ MHz
   E. Stop Frequency : _____ MHz

4. With the calibrated interference signal plus TV signal being conducted into the EUT, the indicated signal level of the interference reference signal is: _____ dBmV.

5. Configure the test system as shown in **Figures #2, and #5.** Adjust the interference generator, Generator #2, to the calibrated 3 V/m power setting.

   A. Generator #2 setting: _____ dBmV

6. While monitoring the interference signal on the analyzer, rotate the EUT to maximize the monitored interference reference signals amplitude.

INDICATE MAXIMIZED POSITION WITH ARROW.

(Maximized position = 0 degree reference.)
(Counter setting = 0.)

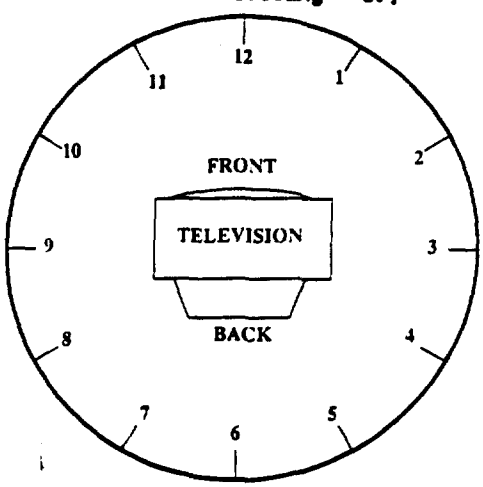

A. Indicated Interference Signal maximum level:_____ dBmV

NOTE: If the maximum indicated level is less than indicated in Step #4, above, test completed. Go to Step #8.

7. Reduce Interference signal generator, Generator #2, until the monitored interference signal matches the amplitude found in Step #4, above.

A. Generator #2 setting: _____ dBmV

8. Repeat Steps #5, #6, and #7, from above, with the EUT rotated to complete ±180 from the EUT's interference signal's maximized orientation, in 45 degree increments.

A. Plus 45°

1. Step #5, Generator #2 setting: _____ dBmV
2. Step #6, Indicated IS level : _____ dBmV
3. Step #7, Generator #2 setting: _____ dBmV

NOTE: If the maximum indicated level is less than indicated in Step #4, above, test completed.
The indicated IS: _____ dBmV

B. Plus 90°

1. Step #5, Generator #2 setting: _____ dBmV
2. Step #6, Indicated IS level : _____ dBmV
3. Step #7, Generator #2 setting: _____ dBmV

NOTE: If the maximum indicated level is less than indicated in Step #4, above, test completed.
The indicated IS: _____ dBμV

C. Plus 135°

1. Step #5, Generator #2 setting: _____ dBmV
2. Step #6, Indicated IS level : _____ dBmV
3. Step #7, Generator #2 setting: _____ dBmV

NOTE: If the maximum indicated level is less than indicated in Step #4, above, test completed.
The indicated IS: _____ dBmV

D. Plus 180°

1. Step #5, Generator #2 setting: _____ dBmV
2. Step #6, Indicated IS level : _____ dBmV
3. Step #7, Generator #2 setting: _____ dBmV

NOTE: If the maximum indicated level is less than indicated in Step #4, above, test completed.
The indicated IS: _____ dBmV

E. Minus 45°

1. Step #5, Generator #2 setting: _____ dBmV
2. Step #6, Indicated IS level : _____ dBmV
3. Step #7, Generator #2 setting: _____ dBmV

NOTE: If the maximum indicated level is less than indicated in Step #4, above, test completed.
The indicated IS: _____ dBmV

F. Minus 90°

1. Step #5, Generator #2 setting: _____ dBmV
2. Step #6, Indicated IS level : _____ dBmV
3. Step #7, Generator #2 setting: _____ dBmV

NOTE: If the maximum indicated level is less than indicated in Step #4, above, test completed.
The indicated IS: _____ dBmV

G. Minus 135°

1. Step #5, Generator #2 setting: _____ dBmV
2. Step #6, Indicated IS level : _____ dBmV
3. Step #7, Generator #2 setting: _____ dBmV

NOTE: If the maximum indicated level is less than indicated in Step #4, above, test completed.
The indicated IS: _____ dBmV

RADIATED DATA SUMMARY SHEET

1. **Reference** Interference Signal Generator setting:_____ dBmV
   [Generator #2, Paragraph 1(C)]

2. Zero degree Interferenec Generator setting: _____ dBmV
   [Generator #2, Paragraph 7(A)]
   1(C) - 7(A) = _____ dB

3. +45 degrees Interference Generator setting: _____ dBmV
   [Generator #2, Paragraph 8(A)(3)]
   1(C) - 8(A)(3) = _____ dB

4. +90 degrees Interference Generator setting: _____ dBmV
   [Generator #2, Paragraph 8(B)(3)]
   1(C) - 8(B)(3) = _____ dB

5. +135 degrees Interference Generator setting: _____ dBmV
   [Generator #2, Paragraph 8(C)(3)]
   1(C) - 8(C)(3) = _____ dB

6. +180 degrees Interference Generator setting: _____ dBmV
   [Generator #2, Paragraph 8(D)(3)]
   1(C) - 8(D)(3) = _____ dB

7. -45 degrees Interference Generator setting: _____ dBmV
   [Generator #2, Paragraph 8(E)(3)]
   1(C) - 8(E)(3) = _____ dB

8. -90 degrees Interference Generator setting: _____ dBmV
   [Generator #2, Paragraph 8(F)(3)]
   1(C) - 8(F)(3) = _____ dB

9. -135 degrees Interference Generator setting: _____ dBmV
   [Generator #2, Paragraph 8(G)(3)]
   1(C) - 8(G)(3) = _____ dB

DATA SHEET
EUT #_____

DATE:_____ ENGINEER:_____

EUT MONITOR POINT: _____BASE-BAND, _____IF

TEST CHANNEL: _____

INJECTION PROBE SUSCEPTIBILITY

1. Configure test configuration as shown in **Figure #6 and #9.** Ensure that the TV signal generator, Generator #1, is adjusted for 0 dBmV (TV video) into the EUT antenna port.

   Adjust the interference signal (IS) generator, Generator #2, to the level required to simulate a 3 V/m impinged signal onto the cable under test, via the cable clamps.

   INITIAL SETTINGS EUT ANTENNA INPUT CABLE:

   A. Generator #1 (TV) setting: _____ dBmV
   B. Generator #1 Frequency : _____ MHz
   C. Generator #2 (IS) setting: _____ dBmV
   D. Generator #2 Frequency : _____ MHz

2. Attach the monitor cable (IF monitor or base-band monitor) to the EUT. Allow 15 minutes for test system warm-up.

3. Adjust Spectrum Analyzer to appropriate frequency band for IF or baseband monitoring.

   ANALYZER SETTINGS:

   A. Resolution Bandwidth: _____ kHz
   B. Video filtering : _____ Hz
   C. Reference Amplitude : _____ dBmV
   D. Start Frequency : _____ MHz
   E. Stop Frequency : _____ MHz

4. With the calibrated, **maximized**, 3 V/m impinged interference signal being injected onto the EUT ANTENNA cable, the indicated signal level at the monitor point (IF or baseband), of the interference reference signal is: _____ dBmV.

5. Reduce the Interference signal generator level, Generator #2, until the monitored interference signal matches the amplitude found in Radiated Susceptibility Step #4.

Note: If the indicated monitored IS level is less than was recorded in Step #4, the test is completed.

A. Indicted Interference Reference level:_____ dBmV
B. Generator #2 setting: _____ dBmV

6. Configure test configuration as shown in **Figure #6 and #9**. Ensure that the TV signal generator, Generator #1, is adjusted for 0 dBmV (TV video) into the EUT antenna port.

   Adjust the interference signal (IS) generator, Generator #2, to the level required to simulate a 3 V/m impinged signal onto the EUT POWER cable, via the cable clamps.

   INITIAL SETTINGS EUT POWER CABLE:

   A. Generator #1 (TV) setting: _____ dBmV
   B. Generator #1 Frequency : _____ MHz
   C. Generator #2 (IS) setting: _____ dBmV
   D. Generator #2 Frequency : _____ MHz

7. Attach the monitor cable (IF monitor or base-band monitor) to the EUT. Allow 15 minutes for test system warm-up.

8. Adjust Spectrum Analyzer to appropriate frequency band for IF or baseband monitoring.

   ANALYZER SETTINGS:

   A. Resolution Bandwidth: _____ kHz
   B. Video filtering : _____ Hz
   C. Reference Amplitude : _____ dBmV
   D. Start Frequency : _____ MHz
   E. Stop Frequency : _____ MHz

9. With the calibrated, **maximized**, 3 V/m impinged interference signal being injected onto the POWER cable, the indicated signal level at the monitor point (IF or baseband), of the interference reference signal is: _____ dBmV.

10. Reduce the Interference signal generator level, Generator #2, until the monitored interference signal matches the amplitude found in Radiated Susceptibility Step #4.

    Note: If the indicated monitored IS level is less than was recorded in Step #4, the test is completed.

    A. Indicted Interference Reference level:_____ dBmV
    B. Generator #2 setting: _____ dBmV

INJECTED SUSCEPTIBILITY DATA SUMMARY SHEET

1. **Reference** Interference Signal Generator setting:_____ dBmV
   [Generator #2, Paragraph 1(C)]

2. **Reference** Interference Signal Generator setting:_____ dBmV
   [Generator #2, Paragraph 6(C)]

3. **VIDEO CABLE** Interferenec Generator setting: _____ dBmV
   [Generator #2, Paragraph 5(B)]
   1(C) - 5(B) = _____ dB

4. **POWER CABLE** Interference Generator setting: _____ dBmV
   [Generator #2, Paragraph 6(B)]
   6(C) - 10(B) = _____ dB

TV CONFIGURATION

COMMENTS: _____

SECTION 2.0

TUNER PERFORMANCE TESTING

OPEN FIELD RANGE EMISSIONS TEST DATA SHEET

EUT # _____

EUT ON PORT A SELECTED

CHANNEL	SELECTED EMISSION LEVEL (dBuV)	ANTENNA FACTOR AND CABLE LOSS (dB)	EMISSIONS LEVEL (uV/m)
15		13.5	
25		20.2	
37		23.0	
53		27.0	

EUT ON PORT B SELECTED

CHANNEL	SELECTED EMISSION LEVEL (dBuV)	ANTENNA FACTOR AND CABLE LOSS (dB)	EMISSIONS LEVEL (uV/m)
15		13.5	
25		20.2	
37		23.0	
53		27.0	

EUT OFF

CHANNEL	SELECTED EMISSION LEVEL (dBuV)	ANTENNA FACTOR AND CABLE LOSS (dB)	EMISSIONS LEVEL (uV/m)
15		13.5	
25		20.2	
37		23.0	
53		27.0	

COMMENTS: CABLE ALWAYS IN PORT A

DATE _____

ENGINEER _____

CARL T. JONES CORPORATION

LOCAL OSCILLATOR LEAKAGE
AND BACKFEED
DATA SHEET

EUT #: _____ Date: _____ EUT Type: _____

(Note: Spectrum Analyzer settings: RES Bw = 300 kHz, VBw = 30 kHz.)

1. Verify test configuration as shown in **Figure A** _____.
2. Verify **CW Generator is OFF** _____.
3. Set **BB Generator for 10 IRE** _____.
4. Set **Modulator for Channel #3** _____.
5. Adjust **Modulator Attenuator to 18.0 dB** _____.
   (Pre-calibrated to produce +15 dBmV Video Carrier and +5 dBmV Aural Carrier at the EUT input.)
6. While monitoring TP1, scan the EUT from 5 MHz to 600 MHz. Record frequencies and amplitudes of any emissions indicated greater than -22.0 dBmV ... which is greater than -35 dBmV at the EUT antenna input port, from 5 MHz to 600 MHz. Test Channel Video and Aural carriers will be excluded.
   (If many emissions are detected, make a spectral plot).

Frequency (MHz)	Indicated Level (dBmV)
107.00	

7. Set **Baseband Generator and Modulator for Channel #12, 10 IRE** _____.
8. Adjust **Modulator Attenuator to 18.0 dB** _____.
   (Pre-calibrated to produce +15 dBmV Video Carrier and +5 dBmV Aural Carrier at the EUT input.)
9. Select Spectrum Analyzer to monitor **TP1** (50Ω Input) _____.
10. While monitoring TP1, scan the EUT from 5 MHz to 600 MHz. Record frequencies and amplitudes of any emissions indicated greater than -22.0 dBmV ... which is greater than -35 dBmV at the EUT antenna input port, from 5 MHz to 600 MHz. Test Channel Video and Aural carriers will be excluded.
    (If many emissions are detected, make a spectral plot).

Frequency (MHz)	Indicated Level (dBmV)
251.00	

11. Set **Baseband Generator and Modulator for Channel #53, 10 IRE** _____.
12. Adjust **Modulator Attenuator to 13.0 dB** _____.
    (Pre-calibrated to produce +15 dBmV Video Carrier and +5 dBmV Aural Carrier at the EUT input.)
13. Select Spectrum Analyzer to monitor **TP1** (50Ω Input) _____.

14. While monitoring TP1, scan the EUT from 5 MHz to 600 MHz. Record frequencies and amplitudes of any emissions indicated greater than -22.0 dBmV ... which is greater than -35 dBmV at the EUT antenna input port, from 5 MHz to 600 MHz. Test Channel Video and Aural carriers will be excluded.
(If many emissions are detected, make a spectral plot).

Frequency (MHz)	Indicated Level (dBmV)
443.00	

15. Set **Baseband Generator and Modulator for Channel #74** _____.
16. Adjust **Modulator Attenuator to 14.0 dB** _____.
(Pre-calibrated to produce +15 dBmV Video Carrier and +5 dBmV Aural Carrier at the EUT input.)
17. Select Spectrum Analyzer to monitor **TP1** (50Ω Input) _____.
18. While monitoring TP1, scan the EUT from 5 MHz to 600 MHz. Record frequencies and amplitudes of any emissions indicated greater than -22.0 dBmV ... which is greater than -35 dBmV at the EUT antenna input port, from 5 MHz to 600 MHz. Test Channel Video and Aural carriers will be excluded.
(If many emissions are detected, make a spectral plot).

Frequency (MHz)	Indicated Level (dBmV)
569.00	

19. Set **Baseband Generator and Modulator for Channel #3, 10 IRE** _____.
20. Adjust **Modulator Attenuator to 33.0 dB** _____.
(Pre-calibrated to produce 0 dBmV Video Carrier and -10 dBmV Aural Carrier at the EUT input.)
21. Select Spectrum Analyzer to monitor **TP1** (50Ω Input) _____.
22. While monitoring TP1, scan the EUT from 5 MHz to 600 MHz. Record frequencies and amplitudes of any emissions indicated greater than -22.0 dBmV ... which is greater than -35 dBmV at the EUT antenna input port, from 5 MHz to 600 MHz. Test Channel Video and Aural carriers will be excluded.
(If many emissions are detected, make a spectral plot).

Frequency (MHz)	Indicated Level (dBmV)
107.00	

23. Set **Baseband Generator and Modulator for Channel #12, 10 IRE** _____.
24. Adjust **Modulator Attenuator to 33.0 dB** _____.
(Pre-calibrated to produce 0 dBmV Video Carrier and -10 dBmV

Aural Carrier at the EUT input.)

25. Select Spectrum Analyzer to monitor **TP1** (50Ω Input) _____.
26. While monitoring TP1, scan the EUT from 5 MHz to 600 MHz. Record frequencies and amplitudes of any emissions indicated greater than -22.0 dBmV ... which is greater than -35 dBmV at the EUT antenna input port, from 5 MHz to 600 MHz. Test Channel Video and Aural carriers will be excluded.
(If many emissions are detected, make a spectral plot).

Frequency (MHz)	Indicated Level (dBmV)
251.00	

27. Set **Baseband Generator and Modulator for Channel #53, 10 IRE** _____.
28. Adjust **Modulator Attenuator to 28.0 dB** _____.
(Pre-calibrated to produce 0 dBmV Video Carrier and -10 dBmV Aural Carrier at the EUT input.)
29. Select Spectrum Analyzer to monitor **TP1** (50Ω Input) _____.
30. While monitoring TP1, scan the EUT from 5 MHz to 600 MHz. Record frequencies and amplitudes of any emissions indicated greater than -22.0 dBmV ... which is greater than -35 dBmV at the EUT antenna input port, from 5 MHz to 600 MHz. Test Channel Video and Aural carriers will be excluded.
(If many emissions are detected, make a spectral plot).

Frequency (MHz)	Indicated Level (dBmV)
443.00	

31. Set **Baseband Generator and Modulator for Channel #74, 10 IRE** _____.
32. Adjust **Modulator Attenuator to 29.0 dB** _____.
(Pre-calibrated to produce 0 dBmV Video Carrier and -10 dBmV Aural Carrier at the EUT input.)
33. Select Spectrum Analyzer to monitor **TP1** (50Ω Input) _____.
34. While monitoring TP1, scan the EUT from 5 MHz to 600 MHz. Record frequencies and amplitudes of any emissions indicated greater than -22.0 dBmV ... which is greater than -35 dBmV at the EUT antenna input port, from 5 MHz to 600 MHz.
(If many emissions are detected, make a spectral plot).

Frequency (MHz)	Indicated Level (dBmV)
569.00	

CALIBRATION DATA FOR SIGNAL LOSS

[LO LEAKAGE FROM CABLE END (EUT INPUT) THROUGH SYSTEM ATTENUATOR; THROUGH DIRECTIONAL COUPLER (INPUT-TO-TAP OUTPUT); THROUGH AMPLIFIER; TO THE SPECTRUM ANALYZER INPUT (50Ω CONNECTOR).] **SEE FIGURE A.**

FREQUENCY (MHz)	INPUT (dBmV)	READING (dBmV)	GAIN (dB)
10.00	0.0	16.6	16.6
20.00	0.0	15.6	15.6
30.00	0.0	15.5	15.5
40.00	0.0	15.4	15.4
50.00	0.0	15.2	15.2
61.25 C	**0.0**	**15.1**	**15.1**
100.00	0.0	14.3	14.3
107.00 LO	**0.0**	**14.2**	**14.2**
150.00	0.0	14.1	14.1
200.00	0.0	13.8	13.8
205.25 C	**0.0**	**13.7**	**13.7**
250.00	0.0	13.9	13.9
251.00 LO	**0.0**	**13.9**	**13.9**
300.00	0.0	13.9	13.9
350.00	0.0	13.5	13.5
397.25 C	**0.0**	**11.9**	**11.9**
400.00	0.0	11.9	11.9
443.00 LO	**0.0**	**10.2**	**10.2**
500.00	0.0	8.9	8.9
523.25 C	**0.0**	**8.3**	**8.3**
569.00 LO	**0.0**	**7.4**	**7.4**
600.00	0.0	7.3	7.3

LOCAL OSCILLATOR LEAKAGE AND BACKFEED SYSTEM CONFIGURATION

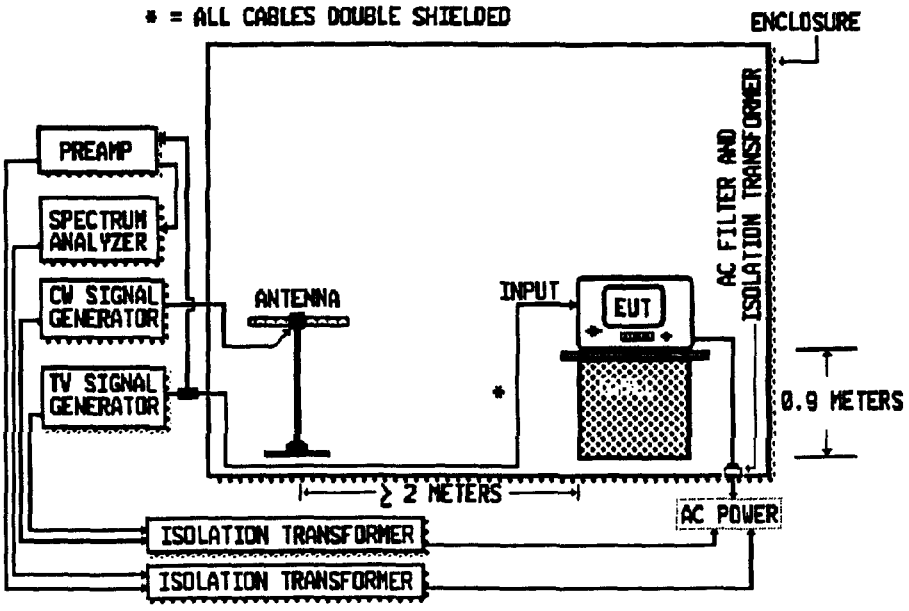

FIGURE A

LOCAL OSCILLATOR LEAKAGE AND BACKFEED TEST CONFIGURATION

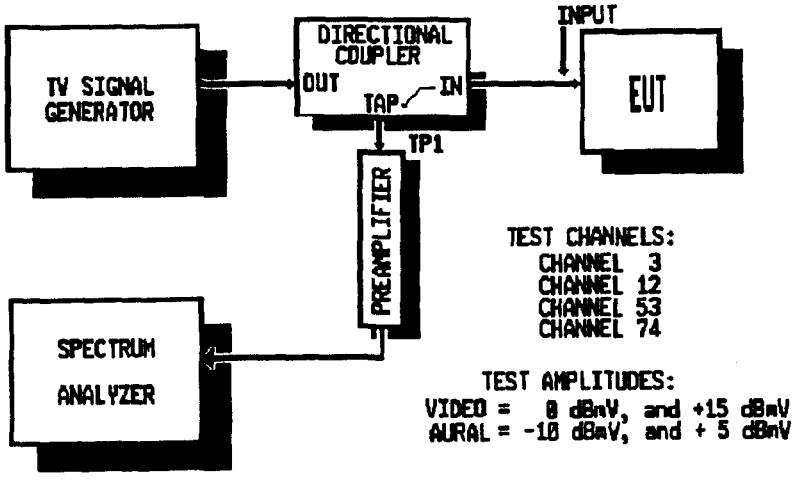

FIGURE 3

A/B SWITCH TEST
NON-SELECTED TO SELECTED INPUT PORT ISOLATION
(EUT's with A & B Inputs)

EUT# _____ DATE: _____ EUT TYPE: _____

CALIBRATION:

Measure the gain from the EUT input connector through the preamplifier to the spectrum analyzer for each test channel. See Figure 6.

GAIN for Channel 3 (61.25 MHz) ... _____ dB
GAIN for Channel 12 (205.25 MHz) ... _____ dB
GAIN for Channel 53 (397.25 MHz) ... _____ dB
GAIN for Channel 74 (523.25 MHz) ... _____ dB

A/B TEST

CHANNEL 3 TEST:

1. Verify that the test system is configured as shown in Figure 6 _____.
2. Turn on EUT to Channel 3 _____.
3. Adjust the CW generator for 61.25 MHz _____.
4. Adjust the CW generator for +30 dBmV (90 dBμV) at the EUT input connector _____.
5. Attach CW generator output to EUT A input connector _____.
6. Select the EUT to operate from the B input connector _____.
7. Measure the CW signal level at the B input connector port.
   B Port level: _____ dBmV
8. minus CH 3 gain = -_____ dB
9. equals **level at EUT** _____ dBmV
10. Isolation equals **<u>30 dBmV</u> - level at EUT** _____ = _____ dB.

CHANNEL 12 TEST:

1. Verify that the test system is configured as shown in Figure 6 _____.
2. Turn on EUT to Channel 12 _____.
3. Adjust the CW generator for 205.25 MHz _____.
4. Adjust the CW generator for +30 dBmV (90 dBμV) at the EUT input connector _____.
5. Attach CW generator output to EUT A input connector _____.
6. Select the EUT to operate from the B input connector _____.
7. Measure the CW signal level at the B input connector port.
   B Port level: _____ dBmV
8. minus CH 12 gain = -_____ dB
9. equals **level at EUT** _____ dBmV
10. Isolation equals **<u>30 dBmV</u> - level at EUT** _____ = _____ dB.

CHANNEL 53 TEST:

1. Verify that the test system is configured as shown in Figure 6 _____.
2. Turn on EUT to Channel 53 _____.
3. Adjust the CW generator for 397.25 MHz _____.
4. Adjust the CW generator for +30 dBmV (90 dBμV) at the EUT input connector _____.
5. Attach CW generator output to EUT A input connector _____.
6. Select the EUT to operate from the B input connector _____.
7. Measure the CW signal level at the B input connector port.
   B Port level: _____ dBmV
8. minus CH 53 gain = -_____ dB
9. equals **level at EUT** _____ dBmV
10. Isolation equals **30 dBmV - level at EUT** _____ = _____ dB.

CHANNEL 74 TEST:

1. Verify that the test system is configured as shown in Figure 6 _____.
2. Turn on EUT to Channel 74 _____.
3. Adjust the CW generator for 523.25 MHz _____.
4. Adjust the CW generator for +30 dBmV (90 dBμV) at the EUT input connector _____.
5. Attach CW generator output to EUT A input connector _____.
6. Select the EUT to operate from the B input connector _____.
7. Measure the CW signal level at the B input connector port.
   B Port level: _____ dBmV
8. minus CH 74 gain = -_____ dB
9. equals **level at EUT** _____ dBmV
10. Isolation equals **30 dBmV - level at EUT** _____ = _____ dB.

B/A TEST

CHANNEL 3 TEST:

1. Verify that the test system is configured as shown in Figure 6 _____.
2. Turn on EUT to Channel 3 _____.
3. Adjust the CW generator for 61.25 MHz _____.
4. Adjust the CW generator for +30 dBmV (90 dBμV) at the EUT input connector _____.
5. Attach CW generator output to EUT B input connector _____.
6. Select the EUT to operate from the A input connector _____.
7. Measure the CW signal level at the A input connector port.
   A Port level: _____ dBmV
8. minus CH 3 gain = -_____ dB
9. equals **level at EUT** _____ dBmV
10. Isolation equals **30 dBmV - level at EUT** _____ = _____ dB.

CHANNEL 12 TEST:

1. Verify that the test system is configured as shown in Figure 6 _____.
2. Turn on EUT to Channel 12 _____.
3. Adjust the CW generator for 205.25 MHz _____.
4. Adjust the CW generator for +30 dBmV (90 dBμV) at the EUT input connector _____.
5. Attach CW generator output to EUT B input connector _____.
6. Select the EUT to operate from the A input connector _____.
7. Measure the CW signal level at the A input connector port.
   A Port level: _____ dBmV
8. minus CH 12 gain = -_____ dB
9. equals **level at EUT** _____ dBmV
10. Isolation equals **30 dBmV - level at EUT** _____ = _____ dB.

CHANNEL 53 TEST:

1. Verify that the test system is configured as shown in Figure 6 _____.
2. Turn on EUT to Channel 53 _____.
3. Adjust the CW generator for 397.25 MHz _____.
4. Adjust the CW generator for +30 dBmV (90 dBμV) at the EUT input connector _____.
5. Attach CW generator output to EUT B input connector _____.
6. Select the EUT to operate from the A input connector _____.
7. Measure the CW signal level at the A input connector port.
   A Port level: _____ dBmV
8. minus CH 53 gain = -_____ dB
9. equals **level at EUT** _____ dBmV
10. Isolation equals **30 dBmV - level at EUT** _____ = _____ dB.

CHANNEL 74 TEST:

1. Verify that the test system is configured as shown in Figure 6 _____.
2. Turn on EUT to Channel 74 _____.
3. Adjust the CW generator for 523.25 MHz _____.
4. Adjust the CW generator for +30 dBmV (90 dBμV) at the EUT input connector _____.
5. Attach CW generator output to EUT B input connector _____.
6. Select the EUT to operate from the A input connector _____.
7. Measure the CW signal level at the A input connector port.
   A Port level: _____ dBmV
8. minus CH 74 gain = -_____ dB
9. equals **level at EUT** _____ dBmV
10. Isolation equals **30 dBmV - level at EUT** _____ = _____ dB

A/B SWITCH ISOLATION TEST CONFIGURATION

TEST SYSTEM #1 ... A TO B - WITH B TO C ACTIVE

TEST SYSTEM #1 ... B TO A - WITH A TO C ACTIVE

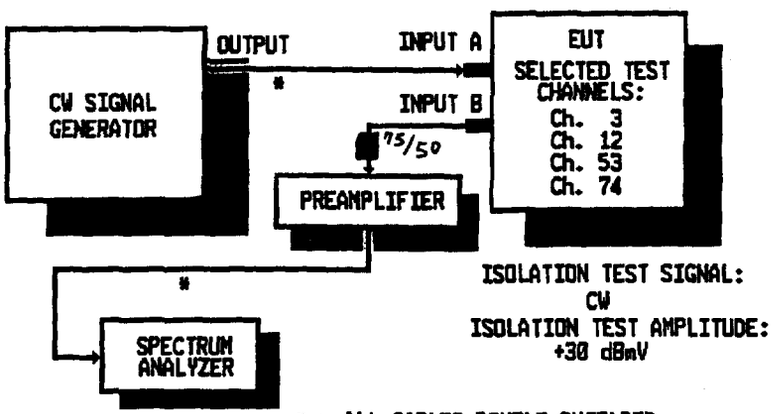

ISOLATION TEST SIGNAL:
CW
ISOLATION TEST AMPLITUDE:
+30 dBmV

* = ALL CABLES DOUBLE SHIELDED

Figure 6

A/B SWITCH ISOLATION TEST CONFIGURATION

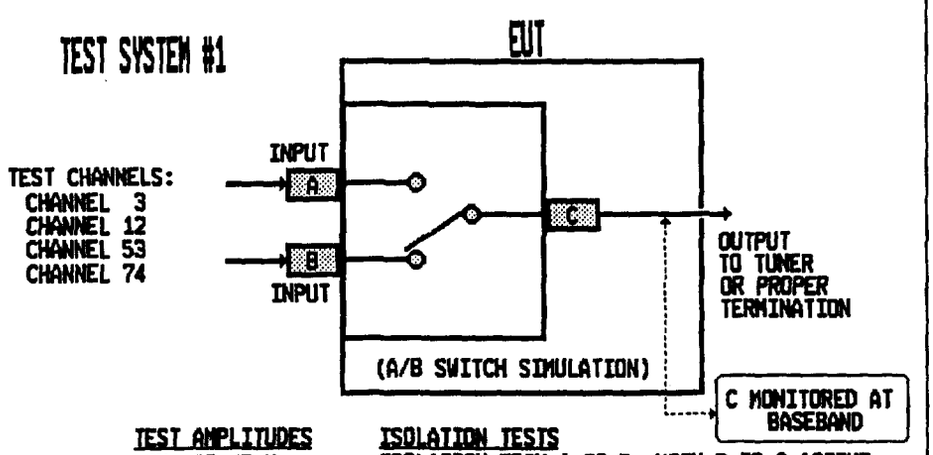

TEST AMPLITUDES	ISOLATION TESTS
CW +30 dBmV	ISOLATION FROM A TO B, WITH B TO C ACTIVE
CW +30 dBmV	ISOLATION FROM B TO A, WITH A TO C ACTIVE
V&A 0, -10 dBmV	ISOLATION FROM A TO C, WITH B TO C ACTIVE
V&A 0, -10 dBmV	ISOLATION FROM B TO C, WITH A TO C ACTIVE

Figure 6

TEST GENERATOR CONFIGURATION
FOR
A/B SWITCH ISOLATION TESTING

Depending on whether the EUT input is terminated, or not, the following test signal source configuration will be used.

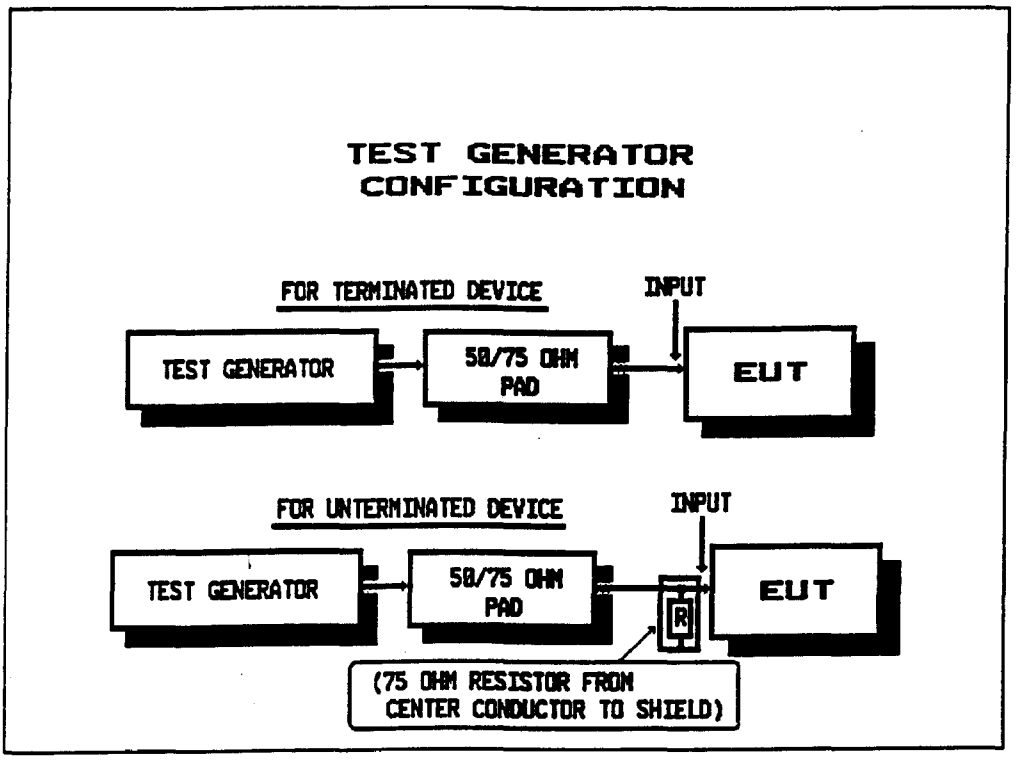

A/B SWITCH TEST
NON-SELECTED INPUT TO OUTPUT PORT ISOLATION

EUT #:_____ DATE _____ EUT TYPE:_____

CALIBRATING THE VM 700A:

1. Verify test system as shown in Figure 7, and 7A _____.
2. Measure **CW GENERATOR 1** loss from output to EUT input:

Channel 03 ... 63.80 MHz ... _____ dB
Channel 12 ... 207.80 MHz ... _____ dB
Channel 53 ... 399.80 MHz ... _____ dB
Channel 74 ... 525.80 MHz ... _____ dB

B/C TEST

CHANNEL 3 TEST:

1. Verify that the test system is configured as shown in Figure 7, and 7A _____.
2. Verify **CW GENERATOR 1** is OFF _____.
3. Select **TV SIGNAL GENERATOR** (Baseband Generator and Modulator) for Channel 3 operation _____.
4. Adjust **TV SIGNAL GENERATOR** (Baseband Generator and Modulator) for 0 dBmV Video Carrier and -10 dBmV Aural Carrier at the input connector, Input A, of the EUT _____.
5. Adjust the **CW GENERATOR 2** for 63.80 MHz _____.
6. Adjust the **CW GENERATOR 2** for +30 dBmV (90 dBμV) at the input connector, Input B, of the EUT _____.
7. Select the EUT to operate from the A input connector _____.
8. Adjust the VM 700A to monitor the EUT's baseband Frequency Spectrum, Field 1, Line 16 _____.
9. From the VM 700A, measure the injected isolation frequency reference level:

FREQUENCY (MHz)	**EMISSION LEVEL (dBmV)**
≈1.04 MHz	_____

10. Turn-off CW GENERATOR 2 _____.
11. Turn-on CW GENERATOR 1 to 63.80 MHz _____.
12. Using **CW GENERATOR 1**, adjust output level until isolation frequency reference level (Step 9) is matched.

CW GENERATOR 2 OUTPUT LEVEL (dBμV)

_____

13. CW GENERATOR 1 OUTPUT LEVEL (Step 12) - cable loss _____ = isolation substitute signal level at EUT = _____ dBμV.

14. Isolation = 90 dBμV - level recorded in Step 13 = _____ dB.

15. Turn-off CW GENERATOR 1 _____.

CHANNEL 12 TEST:

1. Verify that the test system is configured as shown in Figure 7, and 7A _____.
2. Verify **CW GENERATOR 1** is OFF _____.
3. Select **TV SIGNAL GENERATOR** (Baseband Generator and Modulator) for Channel 12 operation _____.
4. Adjust **TV SIGNAL GENERATOR** (Baseband Generator and Modulator) for 0 dBmV Video Carrier and -10 dBmV Aural Carrier at the input connector, Input A, of the EUT _____.
5. Adjust the **CW GENERATOR 2** for 207.80 MHz _____.
6. Adjust the **CW GENERATOR 2** for +30 dBmV (90 dBμV) at the input connector, Input B, of the EUT _____.
7. Select the EUT to operate from the A input connector _____.
8. Adjust the VM 700A to monitor the EUT's baseband Frequency Spectrum, Field 1, Line 16 _____.
9. From the VM 700A, measure the injected isolation frequency reference level:

FREQUENCY (MHz)	**EMISSION LEVEL (dBmV)**
≈2.55 MHz	_____

10. Turn-off CW GENERATOR 2 _____.
11. Turn-on CW GENERATOR 1 to 207.80 MHz _____.
12. Using **CW GENERATOR 1**, adjust output level until isolation frequency reference level (Step 9) is matched.

CW GENERATOR 1 OUTPUT LEVEL (dBmV)

_____

13. CW GENERATOR 1 OUTPUT LEVEL (Step 12) - cable loss _____ = isolation substitute signal level at EUT = _____ dBmV.

14. **Isolation = 30 dBmV - level recorded in Step 13 = _____ dB.**

15. Turn-off CW GENERATOR 1 _____.

CHANNEL 53 TEST:

1. Verify that the test system is configured as shown in Figure 7, and 7A _____.
2. Verify **CW GENERATOR 1** is OFF _____.
3. Select **TV SIGNAL GENERATOR** (Baseband Generator and Modulator) for Channel 53 operation _____.
4. Adjust **TV SIGNAL GENERATOR** (Baseband Generator and Modulator) for 0 dBmV Video Carrier and -10 dBmV Aural Carrier at the input connector, Input A, of the EUT _____.
5. Adjust the **CW GENERATOR 2** for 399.80 MHz _____.
6. Adjust the **CW GENERATOR 2** for +30 dBmV (90 dBμV) at the input connector, Input B, of the EUT _____.
7. Select the EUT to operate from the A input connector _____.
8. Adjust the VM 700A to monitor the EUT's baseband Frequency Spectrum, Field 1, Line 16 _____.
9. From the VM 700A, measure the injected isolation frequency reference level:

FREQUENCY (MHz)	**EMISSION LEVEL (dBmV)**
≈2.55 MHz	_____

10. Turn-off CW GENERATOR 2 _____.

11. Turn-on CW GENERATOR 1 to 399.80 MHz _____.
12. Using **CW GENERATOR 1**, adjust output level until isolation frequency reference level (Step 9) is matched.
    CW GENERATOR 1 OUTPUT LEVEL (dBmV)
    _____
13. CW GENERATOR 1 OUTPUT LEVEL (Step 12) - cable loss _____ = isolation substitute signal level at EUT = _____ dBmV.

14. Isolation = 30 dBmV - level recorded in Step 13 = _____ dB.

15. Turn-off CW GENERATOR 1 _____.

CHANNEL 74 TEST:

1. Verify that the test system is configured as shown in Figure 7, and 7A _____.
2. Verify **CW GENERATOR 1** is OFF _____.
3. Select **TV SIGNAL GENERATOR** (Baseband Generator and Modulator) for Channel 74 operation _____.
4. Adjust **TV SIGNAL GENERATOR** (Baseband Generator and Modulator) for 0 dBmV Video Carrier and -10 dBmV Aural Carrier at the input connector, Input A, of the EUT _____.
5. Adjust the **CW GENERATOR 2** for 525.80 MHz _____.
6. Adjust the **CW GENERATOR 2** for +30 dBmV (90 dBμV) at the input connector, Input B, of the EUT _____.
7. Select the EUT to operate from the A input connector _____.
8. Adjust the VM 700A to monitor the EUT's baseband Frequency Spectrum, Field 1, Line 16 _____.
9. From the VM 700A, measure the injected isolation frequency reference level:

FREQUENCY (MHz)	**EMISSION LEVEL (dBmV)**
≈2.55 MHz	_____

10. Turn-off CW GENERATOR 2 _____.
11. Turn-on CW GENERATOR 1 to 525.80 MHz _____.
12. Using **CW GENERATOR 1**, adjust output level until isolation frequency reference level (Step 9) is matched.
    CW GENERATOR 1 OUTPUT LEVEL (dBmV)
    _____
13. CW GENERATOR 1 OUTPUT LEVEL (Step 12) - cable loss _____ = isolation substitute signal level at EUT = _____ dBmV.

14. Isolation = 30 dBmV - level recorded in Step 13 = _____ dB.

15. Turn-off CW GENERATOR 1 _____.

A/C TEST

CHANNEL 3 TEST:

1. Verify that the test system is configured as shown in Figure 7, and 7A _____.
2. Verify **CW GENERATOR 1** is OFF _____.

3. Select **TV SIGNAL GENERATOR** (Baseband Generator and Modulator) for Channel 3 operation _____.
4. Adjust **TV SIGNAL GENERATOR** (Baseband Generator and Modulator) for 0 dBmV Video Carrier and -10 dBmV Aural Carrier at the input connector, Input B, of the EUT _____.
5. Adjust the **CW GENERATOR 2** for 63.80 MHz _____.
6. Adjust the **CW GENERATOR 2** for +30 dBmV (90 dBμV) at the input connector, Input A, of the EUT _____.
7. Select the EUT to operate from the B input connector _____.
8. Adjust the VM 700A to monitor the EUT's baseband Frequency Spectrum, Field 1, Line 16 _____.
9. From the VM 700A, measure the injected isolation frequency reference level:

FREQUENCY (MHz)	**EMISSION LEVEL (dBmV)**
≈2.55 MHz	_____

10. Turn-off CW GENERATOR 2 _____.
11. Turn-on CW GENERATOR 1 to 63.80 MHz _____.
12. Using **CW GENERATOR 1**, adjust output level until isolation frequency reference level (Step 9) is matched.

CW GENERATOR 1 OUTPUT LEVEL (dBmV)

_____

13. CW GENERATOR 1 OUTPUT LEVEL (Step 12) - cable loss _____ = isolation substitute signal level at EUT = _____ dBmV.

14. **Isolation = 30 dBmV - level recorded in Step 13 = _____ dB.**

15. Turn-off CW GENERATOR 1 _____.

CHANNEL 12 TEST:

1. Verify that the test system is configured as shown in Figure 7, and 7A _____.
2. Verify **CW GENERATOR 1** is OFF _____.
3. Select **TV SIGNAL GENERATOR** (Baseband Generator and Modulator) for Channel 12 operation _____.
4. Adjust **TV SIGNAL GENERATOR** (Baseband Generator and Modulator) for 0 dBmV Video Carrier and -10 dBmV Aural Carrier at the input connector, Input B, of the EUT _____.
5. Adjust the **CW GENERATOR 2** for 207.80 MHz _____.
6. Adjust the **CW GENERATOR 2** for +30 dBmV (90 dBμV) at the input connector, Input A, of the EUT _____.
7. Select the EUT to operate from the B input connector _____.
8. Adjust the VM 700A to monitor the EUT's baseband Frequency Spectrum, Field 1, Line 16 _____.
9. From the VM 700A, measure the injected isolation frequency reference level:

FREQUENCY (MHz)	**EMISSION LEVEL (dBmV)**
≈2.55 MHz	_____

10. Turn-off CW GENERATOR 2 _____.
11. Turn-on CW GENERATOR 1 to 207.80 MHz _____.
12. Using **CW GENERATOR 1**, adjust output level until isolation frequency reference level (Step 9) is matched.

CW GENERATOR 1 OUTPUT LEVEL (dBmV)

_____

13. CW GENERATOR 1 OUTPUT LEVEL (Step 12) - cable loss _____ = isolation substitute signal level at EUT = _____ dBmV.

14. Isolation = 30 dBmV - level recorded in Step 13 = _____ dB.

15. Turn-off CW GENERATOR 1 _____.

CHANNEL 53 TEST:

1. Verify that the test system is configured as shown in Figure 7, and 7A _____.
2. Verify **CW GENERATOR 1** is OFF _____.
3. Select **TV SIGNAL GENERATOR** (Baseband Generator and Modulator) for Channel 53 operation _____.
4. Adjust **TV SIGNAL GENERATOR** (Baseband Generator and Modulator) for 0 dBmV Video Carrier and -10 dBmV Aural Carrier at the input connector, Input B, of the EUT _____.
5. Adjust the **CW GENERATOR 2** for 399.80 MHz _____.
6. Adjust the **CW GENERATOR 2** for +30 dBmV (90 dBμV) at the input connector, Input A, of the EUT _____.
7. Select the EUT to operate from the B input connector _____.
8. Adjust the VM 700A to monitor the EUT's baseband Frequency Spectrum, Field 1, Line 16 _____.
9. From the VM 700A, measure the injected isolation frequency reference level:

FREQUENCY (MHz)	**EMISSION LEVEL (dBmV)**
≈2.55 MHz	_____

10. Turn-off CW GENERATOR 2 _____.
11. Turn-on CW GENERATOR 1 to 399.80 MHz _____.
12. Using **CW GENERATOR 1**, adjust output level until isolation frequency reference level (Step 9) is matched.

CW GENERATOR 1 OUTPUT LEVEL (dBmV)

_____

13. CW GENERATOR 1 OUTPUT LEVEL (Step 12) - cable loss _____ = isolation substitute signal level at EUT = _____ dBmV.

14. Isolation = 30 dBmV - level recorded in Step 13 = _____ dB.

15. Turn-off CW GENERATOR 1 _____.

CHANNEL 74 TEST:

1. Verify that the test system is configured as shown in Figure 7, and 7A _____.
2. Verify **CW GENERATOR 1** is OFF _____.
3. Select **TV SIGNAL GENERATOR** (Baseband Generator and Modulator) for Channel 74 operation _____.
4. Adjust **TV SIGNAL GENERATOR** (Baseband Generator and Modulator) for 0 dBmV Video Carrier and -10 dBmV Aural Carrier at the input connector, Input B, of the EUT _____.
5. Adjust the **CW GENERATOR 2** for 525.80 MHz _____.
6. Adjust the **CW GENERATOR 2** for +30 dBmV (90 dBμV) at the input connector, Input A, of the EUT _____.
7. Select the EUT to operate from the B input connector _____.

8. Adjust the VM 700A to monitor the EUT's baseband Frequency Spectrum, Field 1, Line 16 _____.
9. From the VM 700A, measure the injected isolation frequency reference level:

FREQUENCY (MHz)	**EMISSION LEVEL (dBmV)**
≈2.55 MHz	_____

10. Turn-off CW GENERATOR 2 _____.
11. Turn-on CW GENERATOR 1 to 525.80 MHz _____.
12. Using **CW GENERATOR 1**, adjust output level until isolation frequency reference level (Step 9) is matched.

CW GENERATOR 1 OUTPUT LEVEL (dBmV)

_____

13. CW GENERATOR 1 OUTPUT LEVEL (Step 12) - cable loss _____ = isolation substitute signal level at EUT = _____ dBmV.

14. Isolation = 30 dBmV - level recorded in Step 13 = _____ dB.

15. Turn-off CW GENERATOR 1 _____.

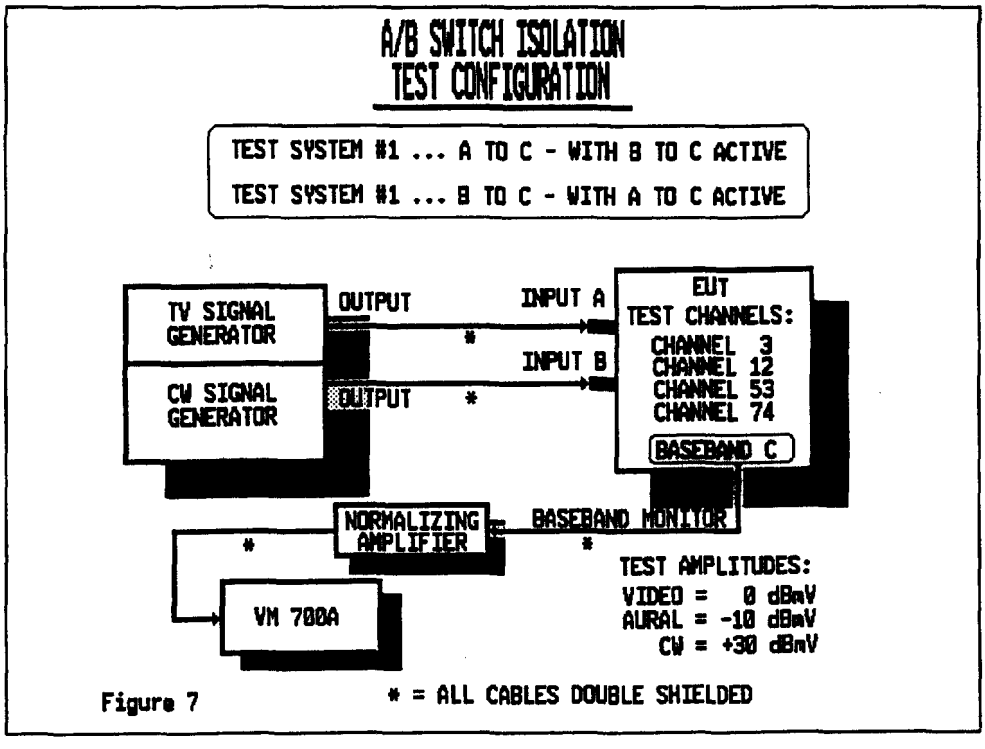

Figure 7

Figure 7A

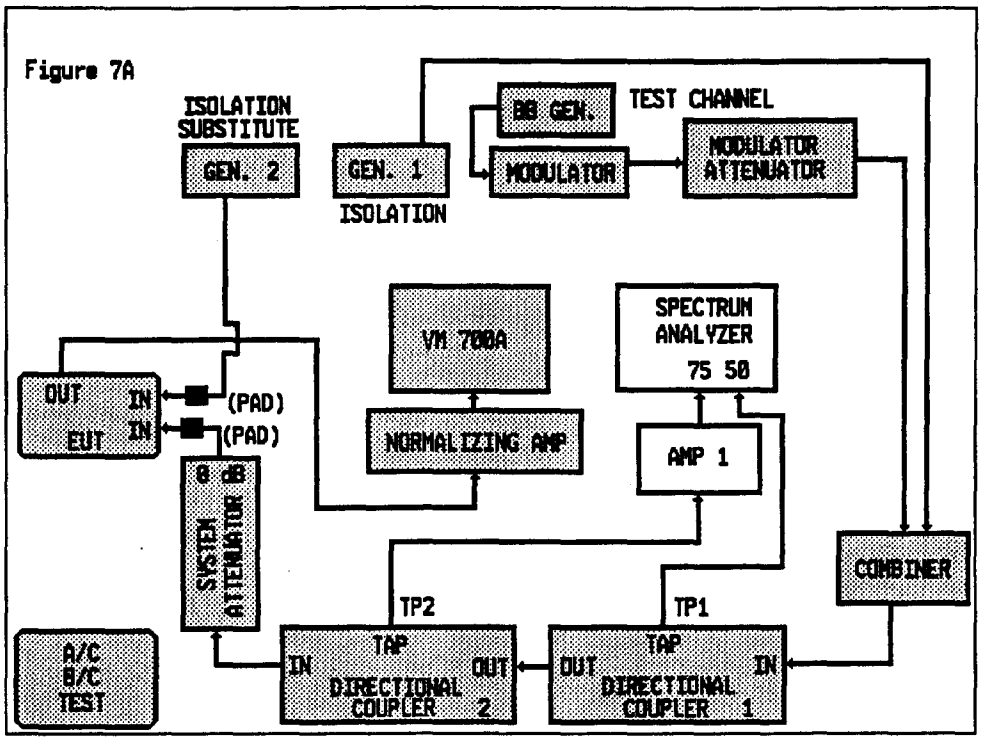
ISOLATION
SUBSTITUTE
GEN. 2
GEN. 1
ISOLATION
BB GEN.
TEST CHANNEL
MODULATOR
MODULATOR
ATTENUATOR
VM 700A
SPECTRUM
ANALYZER
75 50
OUT
IN
EUT
IN
(PAD)
(PAD)
NORMALIZING AMP
AMP 1
0 dB
SYSTEM
ATTENUATOR
COMBINER
TP2
TP1
A/C
B/C
TEST
TAP
IN
OUT
DIRECTIONAL
COUPLER 2
TAP
OUT
IN
DIRECTIONAL
COUPLER 1

A/B SWITCH TEST
VCR INPUT TO OUTPUT PORT INTERNAL SWITCH ISOLATION
(VCR's only)

EUT# _____ DATE: _____ EUT TYPE: _____

CALIBRATION:

Measure the gain from the EUT output connector through the preamplifier to the spectrum analyzer for the test channel. See Figure 8.

GAIN for Channel 3 (63.80 MHz) ... _____ dB

A/C TEST

CHANNEL 3 TEST:

1. Verify that the test system is configured as shown in Figure 8 _____.
2. Insert test tape and turn-on EUT to Channel 3 _____.
3. Adjust the CW generator for 63.80 MHz _____.
4. Adjust the CW generator for +30 dBmV (90 dBμV) at the EUT input connector _____.
5. Attach CW generator output to EUT A input connector _____.
6. Select the EUT to operate in the TAPE PLAY mode _____.
7. Measure the CW signal level at the C output connector port.
   C Port level: _____ dBmV
8. minus CH 3 gain = -_____ dB
9. equals **level at EUT** _____ dBmV
10. Isolation equals **<u>30 dBmV</u> - level at EUT** _____ = _____ dB.

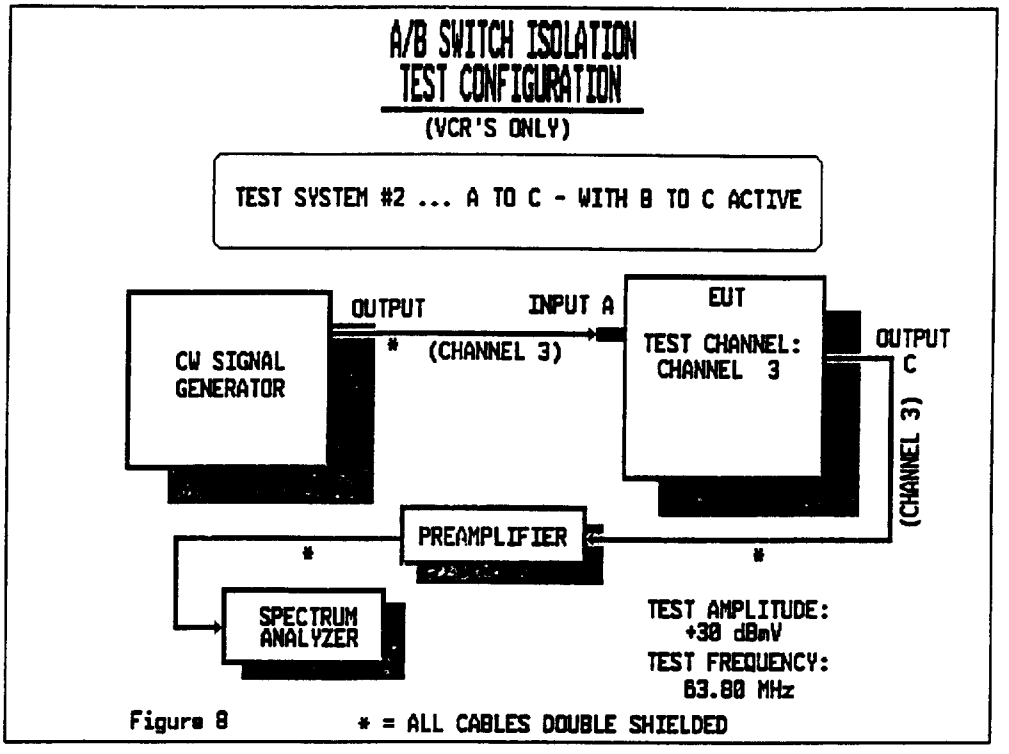

Figure 8

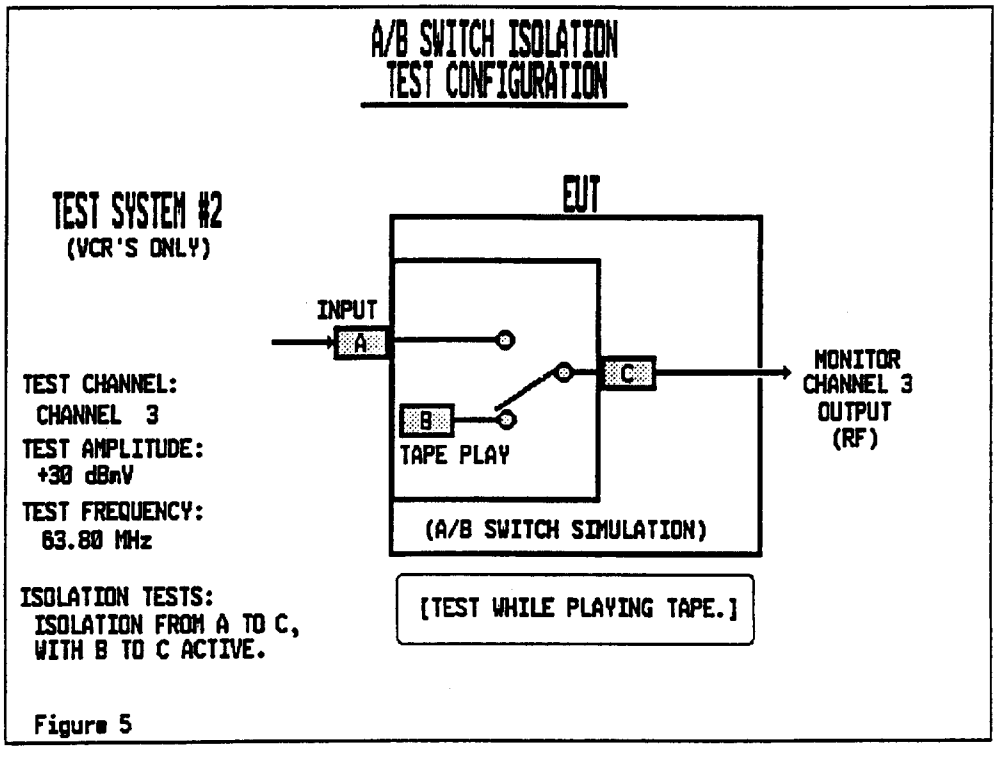

Figure 5

DPU BACKFEED
DATA SHEET

EUT #: _____ Date: _____ EUT Type: _____

(Note: Spectrum Analyzer settings: RES Bw = 30 kHz, VBw = 1 kHz.)

1. Verify test configuration as shown in **Figure E** _____.
2. Set **BB Generator for 10 IRE** _____.
3. Set **Modulator for Channel #6** _____.
4. Adjust **Modulator Attenuator to 18.0 dB** _____.
   (Pre-calibrated to produce +15 dBmV Video Carrier and +5 dBmV Aural Carrier at the EUT input.)
5. Adjust **CW Generator for 85.80 MHz** _____.
6. Adjust **CW Generator for 23.8 dBmV** _____.
   (Pre-calibrated to produce 100 mV/m at EUT.)
7. While monitoring TP1, measure and record **maximized** signal level detected at 85.80 MHz.

Frequency (MHz)	Indicated Level (dBmV)
85.80	

8. Set **Baseband Generator and Modulator for Channel #12, 10 IRE** _____.
9. Adjust **Modulator Attenuator to 18.0 dB** _____.
   (Pre-calibrated to produce +15 dBmV Video Carrier and +5 dBmV Aural Carrier at the EUT input.)
10. Adjust **CW Generator for 207.80 MHz** _____.
11. Adjust **CW Generator for 14.3 dBmV** _____.
    (Pre-calibrated to produce 100 mV/m at EUT.)
12. While monitoring TP1, measure and record **maximized** signal level detected at 207.80 MHz.

Frequency (MHz)	Indicated Level (dBmV)
207.80	

13. Set **Baseband Generator and Modulator for Channel #78, 10 IRE** _____.
14. Adjust **Modulator Attenuator to 13.0 dB** _____.
    (Pre-calibrated to produce +15 dBmV Video Carrier and +5 dBmV Aural Carrier at the EUT input.)
15. Adjust **CW Generator for 549.80 MHz** _____.
16. Adjust **CW Generator for 10.3 dBmV** _____.
    (Pre-calibrated to produce 100 mV/m at EUT.)
17. While monitoring TP1, measure and record **maximized** emission level detected at 549.80 MHz.

Frequency (MHz)	Indicated Level (dBmV)
549.80	

18. Set **Baseband Generator and Modulator for Channel #59** (Broadcast), 10 IRE _____.
19. Adjust **Modulator Attenuator to 20.0 dB** _____.

(Pre-calibrated to produce +15 dBmV Video Carrier and +5 dBmV Aural Carrier at the EUT input.)

20. Adjust **CW Generator for 743.80 MHz** _____.
21. Adjust **CW Generator for 10.9 dBmV** _____.
    (Pre-calibrated to produce 100 mV/m at EUT.)
22. While monitoring TP1, measure and record **maximized** emission level detected at 743.80 MHz.

Frequency (MHz)	Indicated Level (dBmV)
743.80	_____

23. Set **BB Generator for 10 IRE** _____.
24. Set **Modulator for Channel #6** _____.
25. Adjust **Modulator Attenuator to 33.0 dB** _____.
    (Pre-calibrated to produce 0 dBmV Video Carrier and -10.0 dBmV Aural Carrier at the EUT input.)
26. Adjust **CW Generator for 85.80 MHz** _____.
27. Adjust **CW Generator for 23.8 dBmV** _____.
    (Pre-calibrated to produce 100 mV/m at EUT.)
28. While monitoring TP1, measure and record **maximized** emission level detected at 85.80 MHz.

Frequency (MHz)	Indicated Level (dBmV)
85.80	_____

29. Set **Baseband Generator and Modulator for Channel #12, 10 IRE** _____.
30. Adjust **Modulator Attenuator to 33.0 dB** _____.
    (Pre-calibrated to produce 0 dBmV Video Carrier and -10.0 dBmV Aural Carrier at the EUT input.)
31. Adjust **CW Generator for 207.80 MHz** _____.
32. Adjust **CW Generator for 14.3 dBmV** _____.
    (Pre-calibrated to produce 100 mV/m at EUT.)
33. While monitoring TP1, measure and record **maximized** emission level detected at 207.80 MHz.

Frequency (MHz)	Indicated Level (dBmV)
207.80	_____

34. Set **Baseband Generator and Modulator for Channel #78, 10 IRE** _____.
35. Adjust **Modulator Attenuator to 28.0 dB** _____.
    (Pre-calibrated to produce 0 dBmV Video Carrier and -10.0 dBmV Aural Carrier at the EUT input.)
36. Adjust **CW Generator for 549.80 MHz** _____.
37. Adjust **CW Generator for 10.3 dBmV** _____.
    (Pre-calibrated to produce 100 mV/m at EUT.)
38. While monitoring TP1, measure and record **maximized** emission level detected at 549.80 MHz.

Frequency (MHz)	Indicated Level (dBmV)
549.80	_____

39. Set **Baseband Generator and Modulator for Channel #59**

(Broadcast) _____.

40. Adjust **Modulator Attenuator to 35.0 dB** _____.
(Pre-calibrated to produce 0 dBmV Video Carrier and -10 dBmV Aural Carrier at the EUT input.)

41. Adjust **CW Generator for 743.80 MHz** _____.

42. Adjust **CW Generator for 10.9 dBmV** _____.
(Pre-calibrated to produce 100 mV/m at EUT.)

43. While monitoring TP1, measure and record **maximized** emission level detected at 743.80 MHz.

Frequency (MHz)	Indicated Level (dBmV)
743.80	

CALIBRATION DATA FOR SIGNAL LOSS

[DPU BACKFEED FROM CABLE END (EUT INPUT) THROUGH SYSTEM ATTENUATOR; THROUGH DIRECTIONAL COUPLER (INPUT-TO-TAP OUTPUT); THROUGH AMPLIFIER; TO THE SPECTRUM ANALYZER INPUT (50Ω CONNECTOR).] **SEE FIGURE E.**

FREQUENCY (MHz)	INPUT (dBmV)	READING (dBmV)	GAIN (dB)
85.80	0.0	14.4	14.4
207.80	0.0	13.7	13.7
549.80	0.0	8.3	8.3
743.80	0.0	4.3	4.3

CW GENERATOR SETTING CALIBRATION
FOR
100 mV/m at EUT

1. Channel 6 ..... 23.8 dBmV.
2. Channel 12 ..... 14.3 dBmV.
3. Channel 78 ..... 10.3 dBmV.
4. Channel 59 (Broadcast) .... 10.9 dBmV.

DPU BACKFEED
SYSTEM CONFIGURATION

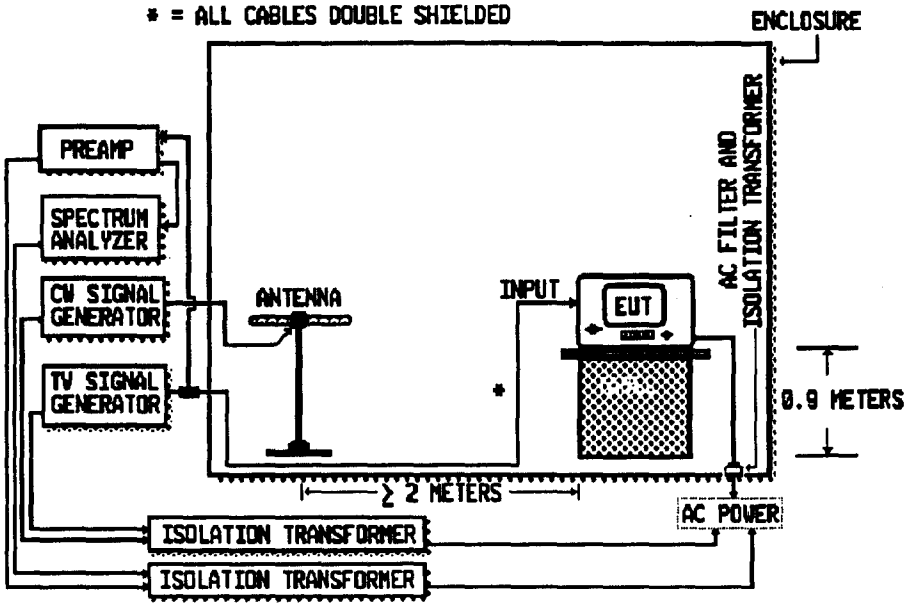

FIGURE E

DPU BACKFEED
EUT CONFIGURATION

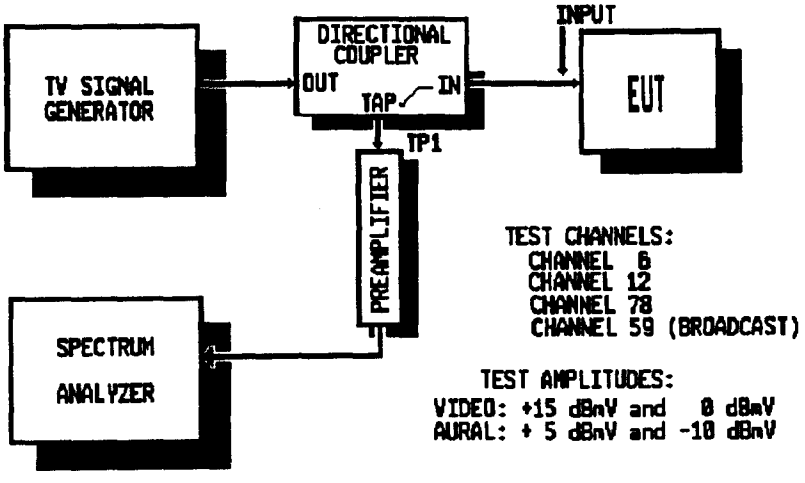

FIGURE 9

VCR THROUGH-LOSS TEST
(VCR's only)

EUT# _____ DATE: _____ EUT TYPE: _____

CHANNEL 3 TEST:

1. Verify that the test system is configured as shown in Figure 11 _____.

2. Adjust the CW generator for 61.25 MHz _____.
3. Adjust the CW generator for +10 dBmV at the EUT input connector _____.
4. Attach CW generator output to EUT A input connector _____.
5. Select the EUT for Channel 3 operation _____.
6. Select EUT for pass-through (input to output) _____.
7. Measure the CW signal level at the C output connector port.
   C Port level: _____ dBmV
8. Through-loss equals **10 dBmV - level at analyzer input** _____ dBmV - cable loss _____ dB = _____ dB.

CHANNEL 12 TEST:

1. Verify that the test system is configured as shown in Figure 11 _____.

2. Adjust the CW generator for 205.25 MHz _____.
3. Adjust the CW generator for +10 dBmV at the EUT input connector _____.
4. Attach CW generator output to EUT A input connector _____.
5. Select the EUT for Channel 3 operation _____.
6. Select EUT for pass-through (input to output) _____.
7. Measure the CW signal level at the C output connector port.
   C Port level: _____ dBmV
8. Through-loss equals **10 dBmV - level at analyzer input** _____ dBmV - cable loss _____ dB = _____ dB.

CHANNEL 53 TEST:

1. Verify that the test system is configured as shown in Figure 11 _____.

2. Adjust the CW generator for 397.25 MHz _____.
3. Adjust the CW generator for +10 dBmV at the EUT input connector _____.
4. Attach CW generator output to EUT A input connector _____.
5. Select the EUT for Channel 3 operation _____.
6. Select EUT for pass-through (input to output) _____.
7. Measure the CW signal level at the C output connector port.
   C Port level: _____ dBmV
8. Through-loss equals **10 dBmV - level at analyzer input** _____ dBmV - cable loss _____ dB = _____ dB.

CHANNEL 74 TEST:

1. Verify that the test system is configured as shown in Figure 11 _____.

2. Adjust the CW generator for 523.25 MHz _____.
3. Adjust the CW generator for +10 dBmV at the EUT input connector _____.
4. Attach CW generator output to EUT A input connector _____.
5. Select the EUT for Channel 3 operation _____.
6. Select EUT for pass-through (input to output) _____.
7. Measure the CW signal level at the C output connector port.
   C Port level: _____ dBmV
8. Through-loss equals **10 dBmV - level at analyzer input** _____ dBmV - cable loss _____ dB = _____ dB.

VCR THROUGH-LOSS TEST CONFIGURATION

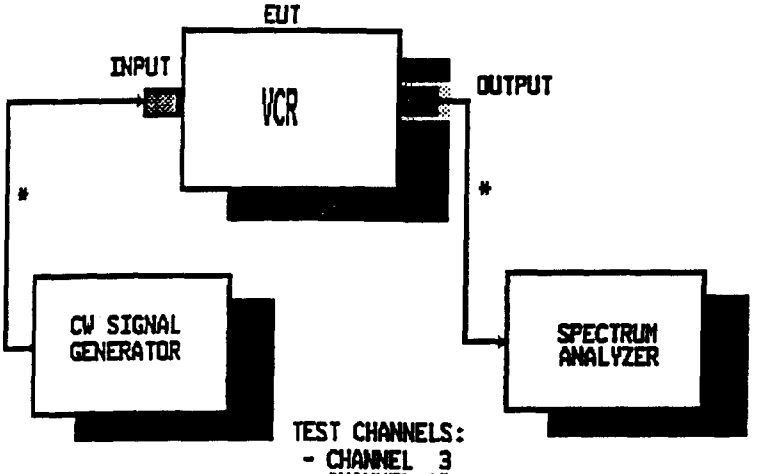

TEST CHANNELS:
- CHANNEL 3
- CHANNEL 12
- CHANNEL 53
- CHANNEL 74

TEST AMPLITUDE:
+10 dBmV

Figure 11

ADJACENT CHANNEL REJECTION
DATA SHEET

EUT #: _____ Date: _____ EUT Type: _____

(Note: System Attenuator set to 0 dB. Spectrum Analyzer settings: RES Bw = 300 kHz, VBw = 3 MHz.)

CALIBRATING THE VM 700A

1. Verify test system as shown in Figure B _____.
2. Verify Matrix Generator is OFF _____.
3. Verify Gen. 1 is OFF _____.
4. Turn on EUT and select for Channel 3 operation.
5. Set BB Generator and Modulator for for Channel #3, 100 IRE _____.
6. Set Modulator Attenuator for 21.5 dB _____.
7. Normalize the baseband input to the VM 700A, 140 IRE, using the Normalizing Amplifier, and the "WAVEFORM" selection on the VM 700A.

INITIAL CALIBRATION and MEASUREMENTS:

8. **Set Baseband Generator and Modulator for Channel 3**, 10 IRE _____.
9. Set Modulator Attenuator for 22.3 dB _____.
   (+10 dBmV Video, and 0 dBmV Aural at EUT.)
10. Adjust Gen. 2 for 58.83 MHz and 15.6 dBmV output _____.
    (-2.0 dBmV, lower channel Color at EUT.)
11. Verify 58.83 MHz level at TP1 ≈ -14.6 dBmV _____.
12. Verify 61.25 MHz level at TP1 ≈ - 3.3 dBmV _____.
13. Adjust VM 700A to monitor the EUT's baseband Frequency Spectrum, Field 1, Line 16 _____.
14. From the VM 700A, measure the adjacent channel component within the baseband and record its amplitude:

FREQUENCY (MHz)	EMISSION LEVEL (dBmV)
≈2.42	_____

15. Adjust Gen. 2 to 63.76 MHz _____.
16. Adjust Gen. 2 output to match the amplitude recorded above and record Gen. 2 output level:

FREQUENCY (MHz)	GENERATOR LEVEL (dBmV)
≈2.42	_____

17. Adjust Gen. 2 for 59.75 MHz and 20.8 dBmV output _____.
    (+3.0 dBmV, lower channel Aural at EUT.)
18. Verify 59.75 MHz level at TP1 ≈ -10.2 dBmV _____.
19. Verify 61.25 MHz level at TP1 ≈ - 3.6 dBmV _____.
20. Adjust VM 700A to monitor the EUT's baseband Frequency Spectrum, Field 1, Line 16 _____.
21. From the VM 700A, measure the adjacent channel component within the baseband and record its amplitude:

FREQUENCY (MHz)	EMISSION LEVEL (dBmV)
≈1.50	

22. Adjust Gen. 2 to 62.75 MHz _____.
23. Adjust Gen. 2 output to match the amplitude recorded above and record Gen. 2 output level:

FREQUENCY (MHz)	GENERATOR LEVEL (dBmV)
≈1.50	

24. Adjust Gen. 2 for 67.25 MHz and 31.2 dBmV output _____. (+13.0 dBmV, upper channel Video at EUT.)
25. Verify 67.25 MHz level at TP1 ≈ -0.5 dBmV _____.
26. Verify 61.25 MHz level at TP1 ≈ -3.0 dBmV _____.
27. Adjust VM 700A to monitor the EUT's baseband Frequency Spectrum, Field 1, Line 16 _____.

28. From the VM 700A, measure the adjacent channel component within the baseband and record their frequencies and emissions:

FREQUENCY (MHz)	EMISSION LEVEL (dBmV)
≈3.00	

29. Adjust Gen. 2 to 64.25 MHz _____.
30. Adjust Gen. 2 output to match the amplitude recorded above and record Gen. 2 output level:

FREQUENCY (MHz)	GENERATOR LEVEL (dBmV)
≈3.00	

31. **Set Baseband Generator and Modulator for Channel 12**, 10 IRE _____.
32. Set Modulator Attenuator for 23.5 dB _____. (+10 dBmV Video, and 0 dBmV Aural at EUT.)
33. Adjust Gen. 2 for 202.83 MHz and 16.2 dBmV output _____. (-2.0 dBmV, lower channel Color at EUT.)
34. Verify 202.83 MHz level at TP1 ≈ -14.0 dBmV _____.
35. Verify 205.25 MHz level at TP1 ≈ - 2.7 dBmV _____.
36. Adjust VM 700A to monitor the EUT's baseband Frequency Spectrum, Field 1, Line 16 _____.

37. From the VM 700A, measure the adjacent channel component within the baseband and record their frequencies and emissions:

FREQUENCY (MHz)	EMISSION LEVEL (dBmV)
≈2.42	

38. Adjust Gen. 2 to 207.67 MHz _____.
39. Adjust Gen. 2 output to match the amplitude recorded above and record Gen. 2 output level:

FREQUENCY (MHz)	GENERATOR LEVEL (dBmV)
≈2.42	

40. Adjust Gen. 2 for 203.75 MHz and 21.4 dBmV output _____. (+3.0 dBmV, lower channel Aural at EUT.)
41. Verify 203.75 MHz level at TP1 ≈ -9.5 dBmV _____.
42. Verify 205.25 MHz level at TP1 ≈ - 2.7 dBmV _____.
43. Adjust VM 700A to monitor the EUT's baseband Frequency

Spectrum, Field 1, Line 16 _____.

44. From the VM 700A, measure the adjacent channel component within the baseband and record their frequencies and emissions:

FREQUENCY (MHz)	EMISSION LEVEL (dBmV)
≈1.50	

45. Adjust Gen. 2 to 206.75 MHz _____.
46. Adjust Gen. 2 output to match the amplitude recorded above and record Gen. 2 output level:

FREQUENCY (MHz)	GENERATOR LEVEL (dBmV)
≈1.50	

47. Adjust Gen. 2 for 211.25 MHz and 31.8 dBmV output _____. (+13.0 dBmV, upper channel Video at EUT.)
48. Verify 211.25 MHz level at TP1 ≈ +0.1 dBmV _____.
49. Verify 205.25 MHz level at TP1 ≈ -2.7 dBmV _____.
50. Adjust VM 700A to monitor the EUT's baseband Frequency Spectrum, Field 1, Line 16 _____.

51. From the VM 700A, measure the adjacent channel component within the baseband and record their frequencies and emissions:

FREQUENCY (MHz)	EMISSION LEVEL (dBmV)
≈3.00	

52. Adjust Gen. 2 to 208.25 MHz _____.
53. Adjust Gen. 2 output to match the amplitude recorded above and record Gen. 2 output level:

FREQUENCY (MHz)	GENERATOR LEVEL (dBmV)
≈3.00	

54. **Set Baseband Generator and Modulator for Channel 53**, 10 IRE _____.
55. Set Modulator Attenuator for 20.2 dB _____. (+10 dBmV Video, and 0 dBmV Aural at EUT.)
56. Adjust Gen. 2 for 394.83 MHz and 17.8 dBmV output _____. (-2.0 dBmV, lower channel Color at EUT.)
57. Verify 394.83 MHz level at TP1 ≈ -13.6 dBmV _____.
58. Verify 397.25 MHz level at TP1 ≈ - 2.2 dBmV _____.
59. Adjust VM 700A to monitor the EUT's baseband Frequency Spectrum, Field 1, Line 16 _____.

60. From the VM 700A, measure the adjacent channel component within the baseband and record their frequencies and emissions:

FREQUENCY (MHz)	EMISSION LEVEL (dBmV)
≈2.42	

61. Adjust Gen. 2 to 399.67 MHz _____.
62. Adjust Gen. 2 output to match the amplitude recorded above and record Gen. 2 output level:

FREQUENCY (MHz)	GENERATOR LEVEL (dBmV)
≈2.42	

63. Adjust Gen. 2 for 395.75 MHz and 23.0 dBmV output _____.

(+3.0 dBmV, lower channel Aural at EUT.)

64. Verify 395.75 MHz level at TP1 ≈ - 9.1 dBmV _____.
65. Verify 397.25 MHz level at TP1 ≈ - 2.2 dBmV _____.
66. Adjust VM 700A to monitor the EUT's baseband Frequency Spectrum, Field 1, Line 16 _____.

67. From the VM 700A, measure the adjacent channel component within the baseband and record their frequencies and emissions:

FREQUENCY (MHz)	EMISSION LEVEL (dBmV)
≈1.50	

68. Adjust Gen. 2 to 398.75 MHz _____.
69. Adjust Gen. 2 output to match the amplitude recorded above and record Gen. 2 output level:

FREQUENCY (MHz)	GENERATOR LEVEL (dBmV)
≈1.50	

70. Adjust Gen. 2 for 403.25 MHz and 33.9 dBmV output _____.
(+13.0 dBmV, upper channel Video at EUT.)
71. Verify 403.25 MHz level at TP1 ≈ + 1.1 dBmV _____.
72. Verify 397.25 MHz level at TP1 ≈ - 2.2 dBmV _____.
73. Adjust VM 700A to monitor the EUT's baseband Frequency Spectrum, Field 1, Line 16 _____.

74. From the VM 700A, measure the adjacent channel component within the baseband and record their frequencies and emissions:

FREQUENCY (MHz)	EMISSION LEVEL (dBmV)
≈3.00	

75. Adjust Gen. 2 to 400.25 MHz _____.
76. Adjust Gen. 2 output to match the amplitude recorded above and record Gen. 2 output level:

FREQUENCY (MHz)	GENERATOR LEVEL (dBmV)
≈3.00	

77. **Set Baseband Generator and Modulator for Channel 74 (82)**, 10 IRE _____.
78. Set Modulator Attenuator for 18.9 dB _____.
(+10 dBmV Video, and 0 dBmV Aural at EUT.)
79. Adjust Gen. 2 for 520.83 MHz and 19.1 dBmV output _____.
(-2.0 dBmV, lower channel Color at EUT.)
80. Verify 520.83 MHz level at TP1 ≈ -13.5 dBmV _____.
81. Verify 523.25 MHz level at TP1 ≈ - 1.3 dBmV _____.
82. Adjust VM 700A to monitor the EUT's baseband Frequency Spectrum, Field 1, Line 16 _____.

83. From the VM 700A, measure the adjacent channel component within the baseband and record their frequencies and emissions:

FREQUENCY (MHz)	EMISSION LEVEL (dBmV)
≈ 2.42	

84. Adjust Gen. 2 to 525.67 MHz _____.
85. Adjust Gen. 2 output to match the amplitude recorded above and record Gen. 2 output level:

FREQUENCY (MHz)	GENERATOR LEVEL (dBmV)
≈2.42	

86. Adjust Gen. 2 for 521.75 MHz and 24.8 dBmV output _____. (+3.0 dBmV, lower channel Aural at EUT.)
87. Verify 521.75 MHz level at TP1 ≈ - 7.9 dBmV _____.
88. Verify 523.25 MHz level at TP1 ≈ - 1.3 dBmV _____.
89. Adjust VM 700A to monitor the EUT's baseband Frequency Spectrum, Field 1, Line 16 _____.

90. From the VM 700A, measure the adjacent channel component within the baseband and record their frequencies and emissions:

FREQUENCY (MHz)	EMISSION LEVEL (dBmV)
≈1.50	

91. Adjust Gen. 2 to 524.75 MHz _____.
92. Adjust Gen. 2 output to match the amplitude recorded above and record Gen. 2 output level:

FREQUENCY (MHz)	GENERATOR LEVEL (dBmV)
≈1.50	

93. Adjust Gen. 2 for 529.25 MHz and 34.3 dBmV output _____. (+13.0 dBmV, upper channel Video at EUT.)
94. Verify 529.25 MHz level at TP1 ≈ +1.1 dBmV _____.
95. Verify 523.25 MHz level at TP1 ≈ -1.3 dBmV _____.
96. Adjust VM 700A to monitor the EUT's baseband Frequency Spectrum, Field 1, Line 16 _____.

97. From the VM 700A, measure the adjacent channel component within the baseband and record their frequencies and emissions:

FREQUENCY (MHz)	EMISSION LEVEL (dBmV)
≈3.00	

98. Adjust Gen. 2 to 526.25 MHz _____.
99. Adjust Gen. 2 output to match the amplitude recorded above and record Gen. 2 output level:

FREQUENCY (MHz)	GENERATOR LEVEL (dBmV)
≈3.00	

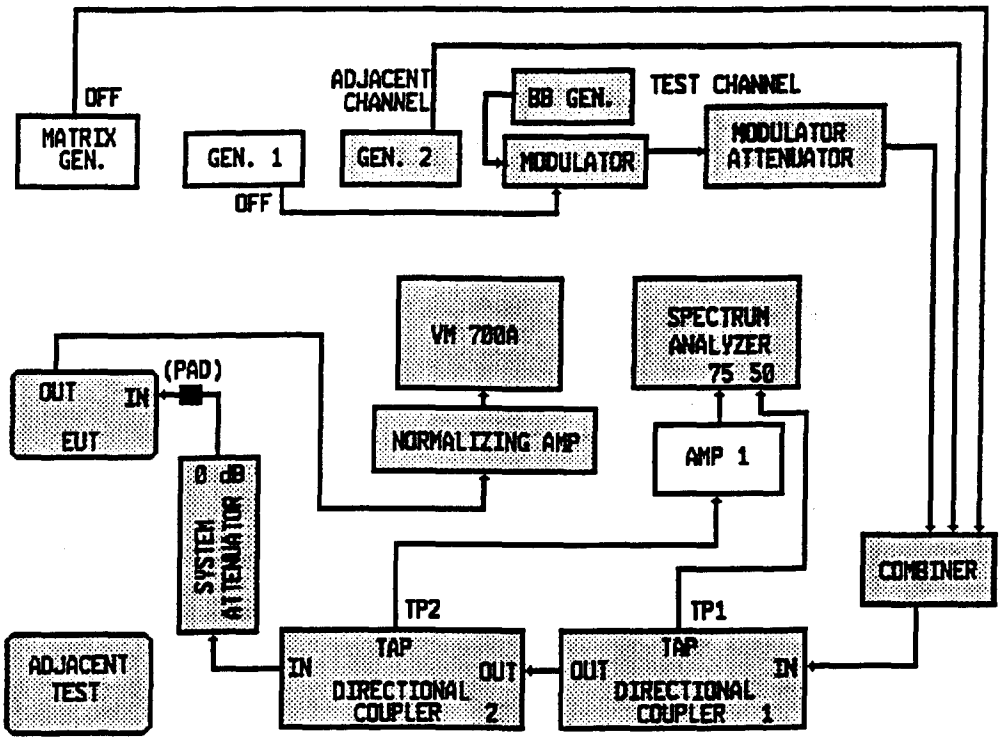

FIGURE B

ADJACENT CHANNEL REJECTION

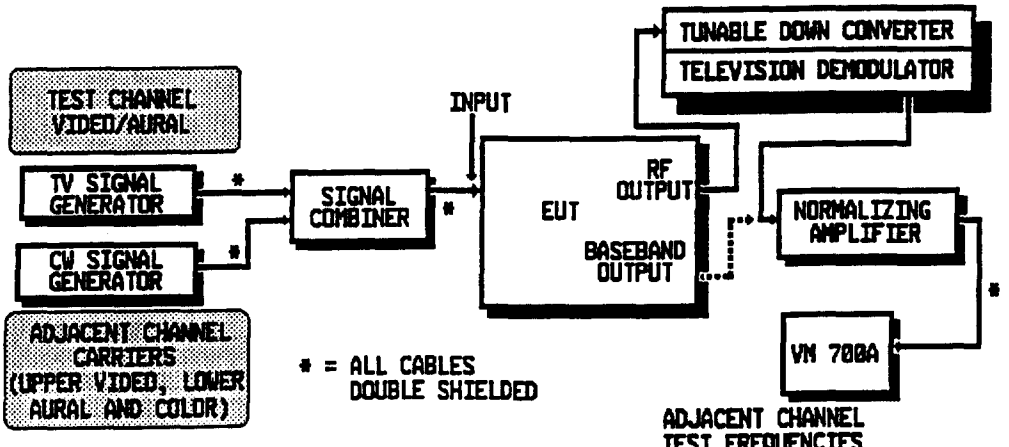

TEST AMPLITUDES

UV =	+13 dBmV
LA =	+ 3 dBmV
LC =	- 2 dBmV
DV =	+10 dBmV
DA =	0 dBmV

TEST CHANNELS

CHANNEL 3
CHANNEL 12
CHANNEL 53
CHANNEL 74

ADJACENT CHANNEL TEST FREQUENCIES

UPPER VIDEO	LOWER AURAL	LOWER COLOR
67.25 MHz	59.75 MHz	58.83 MHz
211.25 MHz	203.75 MHz	202.83 MHz
403.25 MHz	395.75 MHz	394.83 MHz
529.25 MHz	521.75 MHz	520.83 MHz

FIGURE 12

IMAGE CHANNEL REJECTION
DATA SHEET

EUT #: _____ Date: _____ EUT Type: _____

(Note: System Attenuator set to 0 dB. Spectrum Analyzer settings: RES Bw = 300 kHz, VBw = 3 MHz.)

CALIBRATING THE VM 700A

1. Verify test system as shown in Figure C _____.
2. Verify Matrix Generator is OFF _____.
3. Verify Gen. 1 is OFF _____.
4. Turn on EUT and select for Channel 3 operation.
5. Set BB Generator and Modulator for Channel #3 and 100 IRE _____.
6. Set Modulator Attenuator for 21.5 dB _____.
7. Normalize the baseband input to the VM 700A, 140 IRE, using the Normalizing Amplifier, and the "WAVEFORM" selection on the VM 700A.

INITIAL CALIBRATION and MEASUREMENTS:

8. **Set Baseband Generator and Modulator for Channel 3,** 10 IRE _____.
9. Set Modulator Attenuator for 32.7 dB _____.
   (0 dBmV Video, and -10 dBmV Aural at EUT.)
10. Adjust Gen. 2 for 151.25 MHz and +31.1 dBmV output _____.
    (+13 dBmV, Image channel at EUT.)
11. Verify 151.25 MHz level at TP1 ≈ - 0.2 dBmV _____.
12. Verify 61.25 MHz level at TP1 ≈ -12.9 dBmV _____.
13. Adjust VM 700A to monitor the EUT's baseband Frequency Spectrum, Field 1, Line 16 _____.
14. From the VM 700A, measure the image channel component within the baseband and record its amplitude:

FREQUENCY (MHz)	EMISSION LEVEL (dBmV)
≈1.50	_____

15. Adjust Gen. 2 to 62.75 MHz _____.
16. Adjust Gen. 2 output to match the amplitude recorded above and record Gen. 2 output level:

FREQUENCY (MHz)	GENERATOR LEVEL (dBmV)
≈1.50	_____

17. **Set Baseband Generator and Modulator for Channel 12,** 10 IRE _____.
18. Set Modulator Attenuator for 34.0 dB _____.
    (0 dBmV Video, and -10 dBmV Aural at EUT.)
19. Adjust Gen. 2 for 295.25 MHz and +32.5 dBmV output _____.
    (+13.0 dBmV, image channel at EUT.)
20. Verify 295.25 MHz level at TP1 ≈ + 0.3 dBmV _____.
21. Verify 205.25 MHz level at TP1 ≈ -12.3 dBmV _____.

22. Adjust VM 700A to monitor the EUT's baseband Frequency Spectrum, Field 1, Line 16 _____.

23. From the VM 700A, measure the image channel component within the baseband and record their frequencies and emissions:

FREQUENCY (MHz)	**EMISSION LEVEL (dBmV)**
≈1.50	_____

24. Adjust Gen. 2 to 206.75 MHz _____.
25. Adjust Gen. 2 output to match the amplitude recorded above and record Gen. 2 output level:

FREQUENCY (MHz)	**GENERATOR LEVEL (dBmV)**
≈1.50	_____

26. **Set Baseband Generator and Modulator for Channel 53**, 10 IRE _____.
27. Set Modulator Attenuator for 30.0 dB _____.
(0 dBmV Video, and -10 dBmV Aural at EUT.)
28. Adjust Gen. 2 for 487.25 MHz and +34.1 dBmV output _____.
(+13 dBmV, image channel at EUT.)
29. Verify 487.25 MHz level at TP1 ≈ + 0.8 dBmV _____.
30. Verify 397.25 MHz level at TP1 ≈ -11.3 dBmV _____.
31. Adjust VM 700A to monitor the EUT's baseband Frequency Spectrum, Field 1, Line 16 _____.

32. From the VM 700A, measure the adjacent channel component within the baseband and record their frequencies and emissions:

FREQUENCY (MHz)	**EMISSION LEVEL (dBmV)**
≈1.50	_____

33. Adjust Gen. 2 to 398.75 MHz _____.
34. Adjust Gen. 2 output to match the amplitude recorded above and record Gen. 2 output level:

FREQUENCY (MHz)	**GENERATOR LEVEL (dBmV)**
≈1.50	_____

35. **Set Baseband Generator and Modulator for Channel 74 (82)**, 10 IRE _____.
36. Set Modulator Attenuator for 28.9 dB _____.
(0 dBmV Video, and -10 dBmV Aural at EUT.)
37. Adjust Gen. 2 for 613.25 MHz and +34.6 dBmV output _____.
(+13 dBmV, image channel at EUT.)
38. Verify 613.25 MHz level at TP1 ≈ + 1.3 dBmV _____.
39. Verify 523.25 MHz level at TP1 ≈ -10.7 dBmV _____.
40. Adjust VM 700A to monitor the EUT's baseband Frequency Spectrum, Field 1, Line 16 _____.

41. From the VM 700A, measure the adjacent channel component within the baseband and record their frequencies and emissions:

FREQUENCY (MHz)	**EMISSION LEVEL (dBmV)**
≈1.50	_____

42. Adjust Gen. 2 to 524.75 MHz _____.
43. Adjust Gen. 2 output to match the amplitude recorded above and record Gen. 2 output level:

FREQUENCY (MHz)	GENERATOR LEVEL (dBmV)
≈1.50	

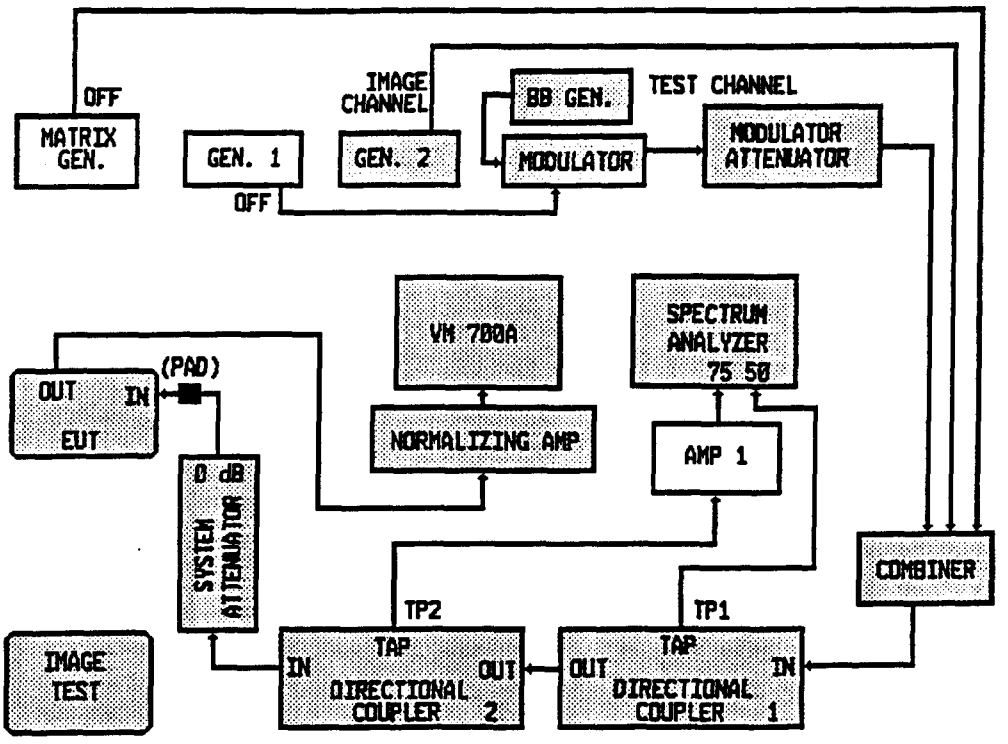

FIGURE C

IMAGE REJECTION

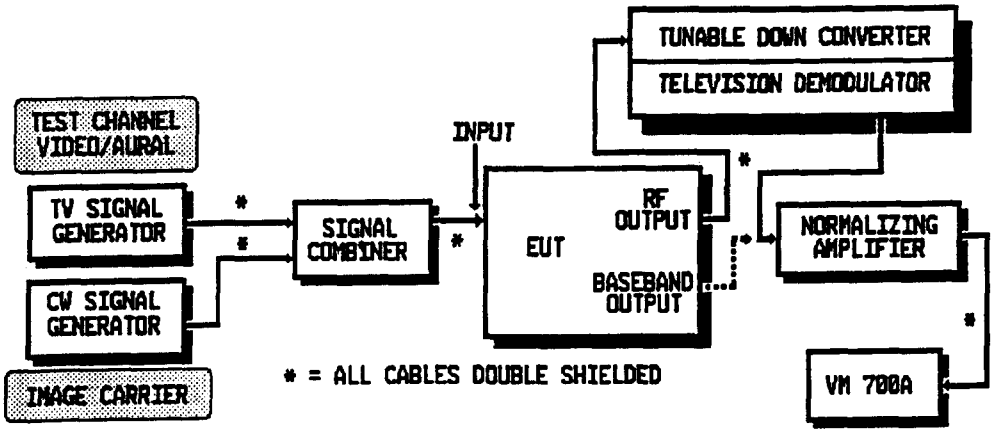

TEST CHANNELS:
- CHANNEL 3 — 61.25 MHz
- CHANNEL 12 — 205.25 MHz
- CHANNEL 53 — 397.25 MHz
- CHANNEL 74 — 523.25 MHz

IMAGE FREQUENCIES (CW):
151.25 MHz
295.25 MHz
487.25 MHz
613.25 MHz

TEST AMPLITUDES:
VIDEO = 0 dBmV
AURAL = -10 dBmV
IMAGE = +13 dBmV

FIGURE 13

TUNER OVERLOAD
(CTB/CSO)
DATA SHEET

EUT #: _____ Date: _____ EUT Type: _____

(Note: System Attenuator set to 0 dB. Spectrum Analyzer settings: RES Bw = 300 kHz, VBw = 3 MHz.)

CALIBRATING THE VM 700A

1. Verify test system as shown in Figure D _____.
2. Verify Matrix Generator is OFF _____.
3. Verify Generator 2 is OFF _____.
4. Turn on EUT and select for Channel 3 operation.
5. Set BB Generator and Modulator for Channel 3, 100 IRE _____.
6. Set Modulator Attenuator for 21.5 dB _____.
7. Normalize the baseband input to the VM 700A, 140 IRE, using the Normalizing Amplifier and the "WAVEFORM" selection on the VM 700A.
8. **Generator 2 was pre-calibrated with the <u>System Attenuator set to 0 dB</u>:**

   A. At each test channel, Generator 2 was set for a signal level of +15.0 dBmV at the TV input connector.

GENERATOR 2 SETTINGS

For CH. 3 ... **61.75 MHz** ..... Setting ___33.5___ dBmV
For CH. 12 ... **205.75 MHz** ..... Setting ___34.0___ dBmV
For CH. 53 ... **397.75 MHz** ..... Setting ___35.5___ dBmV
For CH. 74 ... **523.75 MHz** ..... Setting ___37.0___ dBmV

INITIAL CALIBRATION AND MEASUREMENTS:

9. **Set SYSTEM ATTENUATOR set to 0.0 dB** _____.
10. **Set MATRIX ATTENUATOR to 10.0 dB** _____.
11. **Set BASEBAND GENERATOR AND MODULATOR for Channel 3,** 10 IRE _____.
12. **Set MODULATOR ATTENUATOR to 17.2 dB** _____.
    (+15 dBmV Video and +5 dBmV Aural at EUT.)
13. Adjust Generator 1 for 49.188 MHz at 0 dBmV (LO) _____.
14. Turn on Matrix channels 2 through 78 (PPP) _____.
15. Turn off Matrix channels 3 and 19(F) _____.
16. Verify (Matrix) level at TP1 ≈ +2.5 (40 TO 550 MHz) dBmV_____.
17. Verify 61.17 MHz level at TP1 ≈ +1.5 dBmV _____.
18. Adjust VM 700A to monitor the EUT's baseband Frequency Spectrum, Field 1, Line 16 _____.

19. From the VM 700A, measure the tuner overload channel components, and any additional products, within the baseband and record their amplitudes:

FREQUENCY (MHz)	EMISSION LEVEL (dBmV)
≈ 0.08	
≈ 0.83	
≈ 1.33	

20. Turn off Matrix Generator and adjust Generator 2 to inband equivalent frequencies for recorded overload components listed in STEP #19 _____.
21. Adjust Generator 2 output to match the amplitude recorded above and record Generator 2 output level:

FREQUENCY (MHz)	GENERATOR LEVEL (dBmV)
≈ 61.25	
≈ 62.00	
≈ 62.50	

22. **Set MODULATOR for Channel 12**, 10 IRE, and turn off Generator 2 _____.
23. **Set BASEBAND GENERATOR AND MODULATOR ATTENUATOR to 17.7 dB** _____.
    (+15 dBmV Video and +5 dBmV Aural at EUT.)
24. Adjust Generator 1 for 49.2405 MHz at 0 dBmV (LO) _____.
25. Turn on Matrix channels 2 through 78 (PPP) _____.
26. Turn off Matrix channels 12 and 36 (W) _____.
27. Verify (Matrix) level at TP1 ≈ +2.5 (40 to 550 MHz) dBmV_____.
28. Verify 205.17 MHz level at TP1 ≈ +2.2 dBmV _____.
29. Adjust VM 700A to monitor the EUT's baseband frequency spectrum, Field 1, Line 16 _____.
30. From the VM 700A, measure the tuner overload channel components, and any additional products, within the baseband and record their amplitudes:

FREQUENCY (MHz)	EMISSION LEVEL (dBmV)
≈ 0.08	
≈ 0.83	
≈ 1.33	

44. **Set MODULATOR for Channel 74** (82), 10 IRE, and turn off Generator 2 _____.
45. **Set BASEBAND GENERATOR AND MODULATOR ATTENUATOR to 12.9 dB** _____.
(+15 dBmV video and +5 dBmV Aural at EUT.)
46. Adjust Generator 1 for 49.25378 MHz at 0 dBmV (LO) _____.
47. Turn on Matrix channels 2 through 78 (PPP) _____.
48. Turn off Matrix channels 74(LLL) and 89 (AAAA) _____.
49. Verify (Matrix) level at TP1 ≈ +2.5 (40 to 550 MHz) dBmV_____.
50. Verify 523.17 MHz level at TP1 ≈ +3.8 dBmV _____.
51. Adjust VM 700A to monitor the EUT's baseband frequency spectrum, Field 1, Line 16 _____.
52. From the VM 700A, measure the tuner overload channel components, and any additional products, within the baseband and record their amplitudes:

FREQUENCY (MHz)	EMISSION LEVEL (dBmV)
≈ 0.08	
≈ 0.83	
≈ 1.33	

53. Turn off Matrix Generator and adjust Generator 2 to inband equivalent frequencies for recorded overload components listed in STEP #52 _____.
54. Adjust Generator 2 output to match the amplitude recorded above and record Generator 2 output level:

FREQUENCY (MHz)	GENERATOR LEVEL (dBmV)
≈ 523.25	
≈ 524.00	
≈ 524.50	

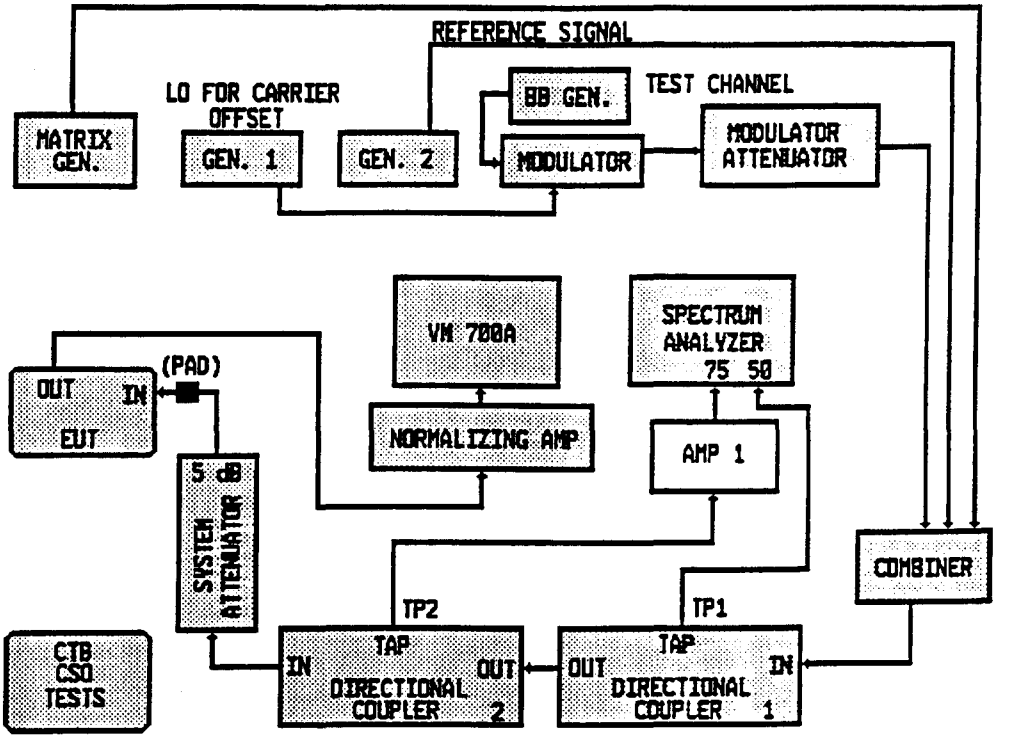

FIGURE D

TUNER OVERLOAD TEST CONFIGURATION

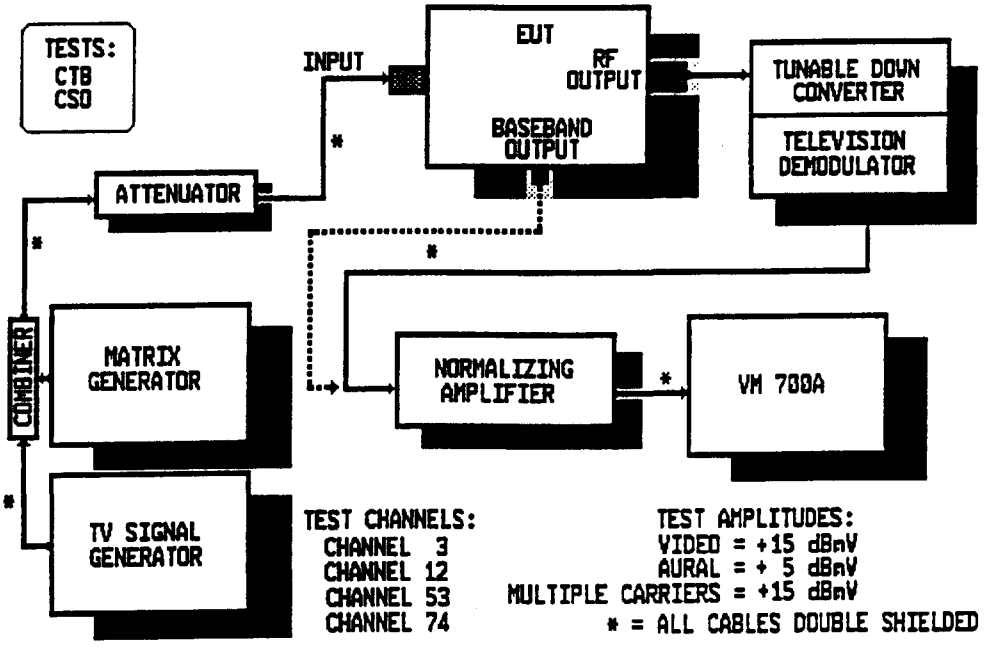

FIGURE 14