BINGHAM McCUTCHEN

Patrick J. Donovan
Direct Phone: (202) 373-6057
Direct Fax: (202) 373-6001
patrick.donovan@bingham.com

March 8, 2007

VIA ECFS

Bingham McCutchen LLP
2020 K Street NW
Washington, DC
20006-1806

202.373.6000
202.373.6001 fax

bingham.com

Boston
Hartford
London
Los Angeles
New York
Orange County
San Francisco
Silicon Valley
Tokyo
Walnut Creek
Washington

Marlene H. Dortch
Secretary
Federal Communications Commission
445 12th Street, SW
Washington, DC 20054

Re: RM-11293
RM-11303

Dear Ms. Dortch:

On March 15, 2001, a Coalition of Competitive Fiber Providers filed the attached Petition for Declaratory Ruling, CC Docket No. 01-77. The attached letter from the Coalition filed May 1, 2002 further explained the relief requested in the Petition.

Today, the Coalition is withdrawing its Petition for Declaratory Ruling. Nonetheless, the issues raised in these filings remain of continuing concern. For the reasons explained in these filings, the Commission should promptly adopt rules and policies, pursuant to Section 224 of the Act and other authority, that would facilitate the ability of competitive fiber providers to extend fiber into ILEC central offices as described in the Petition. This would strongly promote facilities-based competition.

American Fiber Systems, Inc. ("AFS") and Cavalier Telephone, LLC ("Cavalier") respectfully request that the attached filings be associated with the record of the above-referenced proceedings and that the above-referenced proceedings be expanded to encompass the issues raised in the earlier filings of the Coalition of Competitive Fiber Providers.

Please contact the undersigned if you have any questions

Sincerely,

Andrew D. Lipman
Russell M. Blau
Patrick J. Donovan

Bingham McCutchen LLP
bingham.com

Counsel for
American Fiber Systems, Inc.
Cavalier Telephone, LLC

Cc: Thomas Navin
Jeremy Miller

DOCKET FILE COPY ORIGINAL

RECEIVED

MAR 15 2001

FEDERAL COMMUNICATIONS COMMISSION
OFFICE OF THE SECRETARY

Before the
FEDERAL COMMUNICATIONS COMMISSION
Washington, D.C. 20554

In the Matter of	)
	)
Application of Sections 251(b)(4) and 224(f)(1)	)
Of the Communications Act of 1934, as amended,	)
To Central Office Facilities of	)
Incumbent Local Exchange Carriers	)

CC 01-77

PETITION FOR DECLARATORY RULING

COALITION OF COMPETITIVE FIBER PROVIDERS

Andrew D. Lipman
Patrick J. Donovan
Swidler Berlin Shereff Friedman, LLP
3000 K Street, N.W., Suite 300
Washington, D.C. 20007
Telephone: 202-424-7500
Facsimile: 202-424-7645
Counsel for the Coalition of Competitive Fiber Providers

Bruce Frankiewich
Vice President of Legal and Regulatory Affairs
American Fiber Systems, Inc.
100 Meridian Centre - Suite 250
Rochester, NY 14618
Telephone: 716-340-5400

Charles Stockdale
Vice President and Corporate Counsel
Fiber Technologies, LLC
140 Allens Creek Road
Rochester, NY 14618
Telephone: 716-697-5100

Steven Miller
General Counsel
Telseon Carrier Services, Inc.
7887 East Belleview Avenue
Englewood, CO 80111
Telephone: 720-554-7012

Steven Morris
Director, Regulatory Affairs
Global Metro Networks
8401 Colesville Road
Silver Spring, MD 20910
Telephone: 301-578-1900

Theresa Atkins
Assistant General Counsel
Telergy Network Services, Inc.
One Telergy Parkway
East Syracuse, NY 13057
Telephone: 315-362-2882

March 15, 2001

SUMMARY

In this petition for declaratory ruling, the Coalition of Competitive Fiber Providers requests that the Commission determine that competitive fiber providers may, pursuant to Sections 251(b)(4) and 224(f)(1) of the Act, extend fiber to CLECs collocated in ILEC central offices and place distribution frames in ILEC central offices. The Coalition is comprised of American Fiber Systems, Inc., Global Metro Networks, Ltd., Fiber Technologies, LLC, Telergy, Inc., and Telseon Carrier Services, Inc. A prompt consideration and grant of this petition would serve the goals of the Act by facilitating provision of competitive transport services and dark fiber to CLECs that, in turn, can lead to lower prices and greater service options to consumers.

Sections 251(b)(4) and 224(f)(1) of the Act require ILECs to offer telecommunications carriers nondiscriminatory access to "any" poles, ducts, conduits, or rights-of-way owned or controlled by ILECs. This right to nondiscriminatory access, including to any ILEC duct, conduit, or rights-of-way leading to, or in, ILEC central offices, is independent of any rights competitive fiber providers may have to collocate in ILEC central offices pursuant to Section 251(c)(6) of the Act. Moreover, interconnection or access to unbundled network elements is not a precondition under Sections 251(b)(4) and 224(f)(1) to access to ILEC central office duct, conduit, or rights-of-way. Similarly, CLECs collocated in ILEC central offices pursuant to section 251(c)(6) may use Sections 251(b)(4) and 251(b)(6) to cross-connect with other collocated CLECs irrespective of whatever additional rights they may have to do so under Section 251(c)(6).

The Commission's rules define "conduit"as a "structure" in which wires and cable may be installed. A "duct" is defined as a "raceway" which, in industry practice, refers to a channel

used for loosely holding electrical and telephone wires in buildings. These definitions are broad enough to encompass all wiring distribution systems used in ILEC central offices. The Commission should determine that any central office wiring distribution systems are duct or conduit within the meaning of the Commission's rules to which ILECs must offer nondiscriminatory access pursuant to Section 224(f)(1). The Commission should also determine that "defined pathways" used by ILECs to run wiring in central offices constitute rights-of-way that competitive fiber providers and other telecommunications carriers may access pursuant to section 224(f)(1).

As already permitted under Commission rules concerning attachments to ILEC duct, conduit, and rights-of-way generally, competitive fiber providers may include dark fiber as part of host attachments. In addition, consistent with current industry practice, the right of access to ILEC duct, conduit, and rights-of-way includes the right to install equipment that is associated with installation of wiring and cable such as connection devices, signal regenerators, and power supplies. The Commission should determine that competitive fiber providers may, pursuant to Section 224(f)(1), install connector blocks and distribution frames in ILEC central offices.

The Commission should grant this petition on an expedited basis.

TABLE OF CONTENTS

SUMMARY i

I. THE COALITION 1

II. DECLARATORY RELIEF IS WARRANTED 4

III. SECTIONS 251(b)(4) and 224 APPLY TO ILEC CENTRAL OFFICE FACILITIES 5

A. Section 224(f)(1) Applies to "Any" ILEC Facilities 5
B. Application of Section 224(f)(1) to ILEC Central Office Facilities Is Consistent with the Overall Structure of the Act 6

IV. APPLICATION OF SECTION 251(B)(4) AND SECTION 224(F)(1) OBLIGATIONS TO ILEC CENTRAL OFFICES WOULD SERVE THE GOALS OF THE ACT 7

V. ILEC FACILITIES LEADING TO, AND IN, ILEC CENTRAL OFFICES USED TO HOUSE, RUN, OR HOLD WIRING CONSTITUTE "DUCT" AND "CONDUIT" SUBJECT TO SECTION 224 OBLIGATIONS 8

VI. ILEC CENTRAL OFFICES CONTAIN RIGHTS-OF-WAY SUBJECT TO SECTION 224(F)(1) OBLIGATIONS 11

VII. CFPs MAY ACCESS CENTRAL OFFICE DUCT, CONDUIT AND RIGHTS-OF-WAY WITHOUT COLLOCATING UNDER SECTION 251(C)(6) 13

VIII. CLECs COLLOCATED IN ILEC CENTRAL OFFICES UNDER SECTION 251(C)(6) MAY ACCESS ILEC CENTRAL OFFICE DUCT AND CONDUIT TO CROSS-CONNECT WITH OTHER COLLOCATED CLECs 14

IX. DARK FIBER MAY BE INSTALLED IN ILEC CENTRAL OFFICE DUCT AND CONDUIT 15

X. "ACCESS" TO DUCT, CONDUIT, AND RIGHTS-OF-WAY INCLUDES THE RIGHT TO PLACE EQUIPMENT ON ILEC PREMISES 16

XI. SECTION 224(F)(1) APPLIES TO "MANHOLE ZERO" 18

XII. THE COMMISSION SHOULD GRANT THE PETITION ON AN EXPEDITED BASIS 19

XIII. CONCLUSION 20

Before the
FEDERAL COMMUNICATIONS COMMISSION
Washington, D.C. 20554

In the Matter of	)
	)
Application of Sections 251(b)(4) and 224(f)(1)	)
Of the Communications Act of 1934, as amended,	)
To Central Office Facilities of	)
Incumbent Local Exchange Carriers	)

PETITION FOR DECLARATORY RULING

American Fiber Systems, Inc., Global Metro Networks, Ltd., Fiber Technologies, LLC., Telergy, Inc., and Telseon Carrier Services, Inc. ("the Coalition") pursuant to Section 1.2 of the Commission's Rules, 47 C.F.R. § 1.2, submit this petition for declaratory ruling requesting that the Commission determine that incumbent local exchange carriers ("ILECs"), pursuant to Sections 251(b)(4) and 224(f)(1) of the Communications Act of 1934, as amended ("the Act"), must provide to telecommunications carriers nondiscriminatory access to any "duct, conduit, or right-of-way owned or controlled by" an ILEC leading to, or located in, ILEC central offices.

I. THE COALITION

The Coalition is comprised of telecommunications carriers that provide, or will provide, advanced fiber-based transport services, including interoffice transport, and/or dark fiber to end users and other telecommunications carriers. Coalition members together offer these services and products in virtually every region of the "lower 48" states and the District of Columbia. Coalition members have obtained, or are in the process of obtaining, state certification and interconnection agreements with ILECs in the states in which they will operate.

One aspect of Coalition members' business plans is provision of competitive fiber-based transport services and dark fiber to competitive local exchange carriers ("CLECs") collocated in ILEC central offices. In this petition, the Coalition refers to telecommunications carriers that include in their business plans provision of fiber-based transport services and dark fiber to CLEC as competitive fiber providers ("CFPs"). To implement this aspect of their business plan, CFPs need to access CLECs at their collocation space in ILEC central offices. CFPs need to access the ILEC central office for the purpose of extending fiber into the central office and connecting with CLECs collocated there. CFPs also need to install active electronics in CLEC collocation space and to place a distribution frame in the central office to facilitate future requests from CLECs for provision of fiber-based distribution services. In this Petition for Declaratory Ruling, the Coalition seeks a determination from the Commission that CFPs may obtain this access to the ILEC central office necessary to implement this aspect of their respective business plans, pursuant to Sections 251(b)(4) and 224(f)(1) of the Act.

Coalition members together represent a total capital investment of approximately $1 billion.

American Fiber Systems, Inc. is based in Rochester, New York. It plans to offer CLECs, ISPs and other customers high-capacity dark fiber networks and fiber-based telecommunications services in metropolitan areas of second and third-tier cities in 41 states, such as St. Louis, Missouri, Kansas City, Kansas and Missouri, and Nashville, Tennessee. American Fiber Systems, Inc. is certificated in eleven states and currently has applications pending in six other states.

Fiber Technologies, LLC is a CFP also based in Rochester, New York. Fiber Technologies, LLC is in the process of deploying fiber networks throughout the New England

and mid-Atlantic regions. Fiber Technologies, LLC has commenced service in Albany, New York, expects to do so in Syracuse, Buffalo, and Rochester, New York in the first quarter of 2001, and plans to expand its service to additional cities in Massachusetts, Rhode Island, Connecticut, Ohio, Pennsylvania, and other states later in the year.

Global Metro Networks, Inc., based in Silver Spring, Maryland, is constructing local fiber networks in major markets throughout the United States and Europe which will be used to provide telecommunications services to other carriers, ISPs and other large enterprises. Global Metro Networks, Inc. is in the process of obtaining state certification and interconnection agreements with ILECs in a number of states. Global Metro is currently constructing its network in California, Texas, Florida, Georgia, Illinois, Virginia, Maryland, and Washington, D.C.

Telergy, Inc., through its operating subsidiaries, is a facilities-based provider of advanced optical network solutions in the northeastern United States and Canada. Telergy's "OpticalNet" suite of services is delivered over its network which integrates last-mile private network builds with local metropolitan rings and long distance telecommunications facilities. Telergy is building its network on contiguous rights-of-way in its region, primarily using access rights granted by major utility companies.

Telseon Carrier Services, Inc., headquartered in Englewood, Colorado, currently provides "managed gigabit" IP telecommunications services to customers in 20 major U.S. cities, including San Francisco, Los Angeles, New York, Washington, D.C., Chicago, and Dallas over fiber facilities. Telseon's services permit customers to manage and efficiently utilize the bandwidth capacity of fiber. Telseon is in the process of obtaining state certifications and interconnection agreements with ILECs in every state in which it operates.

II. DECLARATORY RELIEF IS WARRANTED

Section 1.2 of the Commission's Rules provides that "[t]he Commission may, in accordance with Section 5(d) of the Administrative Procedure Act, on motion or on its own motion issue a declaratory ruling terminating a controversy or removing uncertainty."[1] As discussed, Coalition members need to access ILEC central offices for the purpose of providing service to CLECs collocated there. However, ILECs, with the exception of Verizon in former Bell Atlantic territory,[2] do not permit competitive fiber providers to do so. ILECs in the *Collocation Remand Proceeding*[3] contend that competitive fiber providers have no right to collocate in ILEC central offices under Section 251(c)(6) because they do not interconnect with the ILEC or access the UNEs of the ILEC.[4] ILECs do not permit CLECs generally, or competitive fiber providers in particular, to access poles, duct, conduit, or rights-of-way leading to, and in, ILEC central offices pursuant to Sections 251(b)(4) or 224(f)(1). SBC, for example, will only permit access to the "manhole" nearest to the central office.[5] Some ILEC interconnection agreements specifically exclude access to duct and conduit leading to, and in,

---

[1] 47 C.F.R. Section 1.2.

[2] Pursuant to its federal Competitive Alternate Transport Terminal ("CATT") tariff, Verizon in former Bell Atlantic territory permits CLECs and CFPs to extend fiber into the central office and place a distribution frame there. Verizon FCC Tariff No. 1, Section 19.10.3. Under the CATT tariff, Verizon provides a shared point within the central office at which a "competitive fiber provider can terminate its facilities for distribution to collocation arrangements within that central office." *Id.*

[3] *Deployment of Wireline Services Offering Advanced Telecommunications Capability and Implementation of the Local Competition Provisions of the Telecommunications Act of 1996*, CC Docket. Nos. 98-147, 96-98, Order on Reconsideration and Second Further Notice of Proposed Rulemaking in CC Docket No. 98-147 and Fifth Further NPRM in CC Docket No. 96-97, FCC 00-297 (Aug. 10, 2000)("*Collocation Remand Proceeding*").

[4] See Comments of SBC at 17; Comments of BellSouth at 7 (filed Oct. 12, 2000).

[5] *See* Comments of Metromedia Fiber Network Services, Inc., CC Docket No. 00-217, filed November 15, 2000, at 5. *See also* Reply Brief of Southwestern Bell, CC Docket No. 00-217, filed December 11, 2000, at 88.

ILEC central offices. On the other hand, as explained in this petition, the access requested by the Coalition is required under the Act. Accordingly, there is both a controversy and uncertainty concerning rights of CFPs under Sections 251(b)(4) and 224(f)(1) to access ILEC facilities leading to, and in, ILEC central offices. The Commission should address, and grant, the instant petition in order to eliminate this controversy and uncertainty. In other instances, the Commission has granted petitions for declaratory ruling to resolve disagreements between parties and to avoid multiple single claims in the future.[6] For the same reasons, and because grant of the petition would facilitate provision of competitive transport services, grant of this petition would serve the public interest.

III. SECTIONS 251(b)(4) and 224 APPLY TO ILEC CENTRAL OFFICE FACILITIES

A. Section 224(f)(1) Applies to "Any" ILEC Facilities

Section 224 (f)(1) provides that a utility "shall provide . . . any telecommunications carrier with nondiscriminatory access to any pole, duct, conduit, or right-of-way owned or controlled by it."[7] (emphasis added). On its face, therefore, Section 224(f)(1) provides that if the duct, conduit, or right-of-way is owned or controlled by the ILEC, the ILEC is obligated to provide nondiscriminatory access to it. In *the Competitive Networks Order*, the Commission found that Section 224(f)(1) requires "non-discriminatory access to any pole, duct, conduit, or

---

[6] *See e.g., Petition for Declaratory Ruling Regarding the Rights of Users (and CPE Vendors or Maintenance Personnel Acting on Users' Behalf) to Access Embedded Complex Intrasystem Wiring*, 101 FCC 2d 287 (1985).

[7] Section 251(b)(4) requires local exchange carriers to "afford access to the poles, ducts, conduits and rights of way of such carrier to competing providers of telecommunications services on rates, terms and conditions that are consistent with section 224." Section 271 requires Bell Operating Companies ("BOCs") to offer nondiscriminatory access to poles, ducts, conduit and rights-of-way owned by the BOC as part of the 14-point checklist with which BOCs must comply prior to obtaining authorization to provide interLATA service.

right-of-way owned or controlled" by a utility "without qualification."[8] Further, the FCC concluded that this obligation is "not limited by location..."[9] Accordingly, Section 224(f)(1) requires nondiscriminatory access to ILEC duct, conduit, and rights-of-way leading to, and in, ILEC central offices. The Commission would be creating an unlawful exclusion if it were to determine that Section 224(f)(1) does not apply to duct, conduit, and rights-of-way leading to, and in, ILEC central offices.[10]

B. Application of Section 224(f)(1) to ILEC Central Office Facilities Is Consistent with the Overall Structure of the Act

Section 251(c)(6) permits collocation of equipment "necessary for interconnection or access to unbundled network elements ..."[11] Section 224(f)(1), on the other hand, contains no such limitation and grants access to "any" ILEC pole, duct, conduit, or right-of-way. Thus, Sections 251(c)(6) and 224(f)(1) establish independent, and different, rights of access to ILEC central offices.

The availability of two different access rights is consistent with the overall structure of the Act. Sections 251(c)(6) and 224(f)(1) are intended to solve different, albeit overlapping problems. Section 251(c)(6) is intended primarily to solve the specific problems associated with

---

8 *Promotion of Competitive Networks in Local Telecommunications, Implementation of the Local Competition Provisions of the Telecommunications Act of 1996 and Review of Sections 68.104, and 68.213 of the Commissions Rules*, WT Docket No. 99-217, CC Dkt Nos. 96-97 and 88-57; First Report and Order and FNPRM in WT Docket No. 99-217, Fifth Report and Order in CC Docket No. 96-98 and Fourth Report and Order in CC Docket No. 88-57, FCC 00-377 (Rel. Oct. 25, 2000), at para. 80. ("*Competitive Networks Order*").

9 *Id.* para. 76.

10 Section 224(f)(2), 47 U.S.C. Section 224(f)(2), sets forth the only exception to this obligation: it permits a utility providing electric service to deny access to its poles, ducts, conduit or rights-of-way where there is insufficient capacity or for reasons of safety or reliability. This exception, which has been extended by the Commission to telephone companies, does not excuse the facility owner from a requirement to expand the available capacity or otherwise make adjustments necessary to ensure safety and reliability in order to accommodate a request for access.

11 47 U.S.C. Section 251(c)(6).

exchanging traffic and accessing UNEs. Section 224 is intended to solve a more general problem - the prohibitive expense associated with duplicating the infrastructure (poles, ducts, conduits, rights-of-way) needed to extend facilities to new customers. That CFPs are attempting to provide service to CLECs that are exercising their rights under Section 251(c)(6) does not in any way eliminate the problem Section 224 is intended to solve. To the contrary, because it would be impossible for a CFP to build its own ducts and conduit within a central office, the logic of applying Section 224 to ILEC central office facilities under these circumstances is compelling.

IV. APPLICATION OF SECTION 251(B)(4) AND SECTION 224(F)(1) OBLIGATIONS TO ILEC CENTRAL OFFICES WOULD SERVE THE GOALS OF THE ACT

The Telecommunications Act of 1996 was intended to establish "a pro-competitive, deregulatory national policy framework" designed to "promote competition and reduce regulation ... to secure lower prices and higher quality services for American telecommunications consumers and encourage the rapid deployment of new telecommunications technologies."[12]

Determining that CFPs and other telecommunications carriers may access ILEC central office duct, conduit, and rights-of-way would help achieve these goals by permitting CFPs to provide competitive transport and other services to CLECs in the most efficient, and, in many cases, the only economically feasible manner possible. Granting CFPs the right to bring fiber directly into central offices will reduce the expense and time required for a CLEC to expand the

---

[12] S. Conf. Rep. No. 230, 104th Cong. 2d Sess. 1 (1996). In implementing the statute, the Commission has the responsibility to adopt rules that will implement most quickly and effectively the national telecommunications policy embodied in the Act. *Telephone Number Portability*, First Report and Order and Further Notice of Proposed Rulemaking, CC Docket No. 95-116, FCC 96-286, rel. July 2, 1996.

number of central offices in which it operates. The availability of alternative transport facilities will enable CLECs to provide service to more consumers at lower prices. In addition, CFPs, as smaller and more flexible companies, are generally better positioned than ILECs to bring the newest technologies to their customers, which can facilitate provision of innovative and improved quality services to the public. Conversely, requiring CFPs to connect with CLECs only outside of ILEC central offices would limit CLECs to obtaining transport from the ILEC or constructing new facilities to a meet point with the CFP. The first of these options is antithetical to the competitive principles underlying the Act, while the second would impose on CLECs and CFPs the unnecessary and exorbitant costs of extending interconnection facilities to geographically dispersed locations around a central office. The ILEC central office remains one of the quintessential "bottleneck" facilities that CLECs, and in turn CFPs, must access in order to realistically be able to provide competitive services. Accordingly, apart from the direct mandate of the statute, the Commission should determine that CFPs may access ILEC duct, conduit, and rights-of-way pursuant to Sections 251(b)(4) and 224(f)(1) in order to promote the pro-competitive goals of the Act.

V. ILEC FACILITIES LEADING TO, AND IN, ILEC CENTRAL OFFICES USED TO HOUSE, RUN, OR HOLD WIRING CONSTITUTE "DUCT" AND "CONDUIT" SUBJECT TO SECTION 224 OBLIGATIONS

ILECs own and control a rich fabric of facilities leading to, and in, ILEC central offices that are used by the ILEC to house, run, and support wiring, cable, and transmission facilities. Without this, ILECs could not extend wiring and transmission facilities to, and in and around, the interior of central offices that are necessary to provide their various telecommunications services.

Some of these facilities consist of below- or above-ground vaults, pipes, and tubes of various dimensions in which wires are placed. In other cases, especially inside the central

office, ILECs use a variety of distribution systems to extend wiring in and around the central office. In some of these systems, wiring is not completely enclosed in pipe or tubes but instead is held in place by racks or clips or straps placed at various intervals along the run of wiring. Attachments A, B, and C to this petition present photographs of wiring distribution systems comprised of racks, pipe, and other means for distributing wiring throughout a central office or other building.

All of these wiring distribution systems achieve the same purpose of housing wiring, but are different based on the environment in which they are used. Thus, in central offices it may not be necessary for wiring to be installed in pipe because it is not exposed to the elements and because there is a lesser risk of harm to the facilities, and no risk to consumers. Congress intended that Section 224(f)(1) provide telecommunications carriers access to "bottleneck" facilities, in addition to other ILEC facilities. These wiring systems, especially those in the central office, retain the character of bottleneck facilities, regardless of the particular wiring mechanism used. Therefore, it would make little sense - - and would frustrate the fundamental access rights that Congress intended to establish in Section 224(f)(1) - - to precondition those rights on an ILEC's choice of wiring distribution systems. Accordingly, the Coalition requests that the Commission determine that all of such systems, and, indeed, any system used by ILECs to house, hold, or run wiring in central offices, constitute duct and conduit within the meaning of Section 224(f)(1).

In this connection, the Commission's definitions of "duct" or "conduit" are broad enough to encompass the full range of wiring distribution systems used in central offices. Section 1.1401(i) of the Commission's rules defines "conduit" as "a structure containing one or more ducts, usually placed in the ground, in which cables or wires may be installed." The clips, straps,

or racks used by ILECs, in some instances, to hold wiring in central offices constitute "structures." The Commission initially defined conduit as a pipe.[13] That it later changed the definition to "structure," shows that the Commission intended the definition to be sufficiently flexible to encompass anything in which wiring can be installed. Therefore, straps, clips, and racks used to hold and run wiring constitute a "conduit" within the meaning of Section 1.1401(i) of the Commission's rule.

Similarly, the Commission's rules define "duct" as a "single enclosed raceway for conductors, cable and/or wire." "Raceway" is not defined in the Commission's rules, but has been defined as a "metal or plastic channel used for loosely holding electrical and telephone wires in buildings."[14] Thus, "raceway," as used in the Commission's rules is broad enough to encompass wire distribution systems using straps, clips, or racks instead of pipes because a system of straps, clips, or racks forms a "channel" for holding telephone wires in the same way as pipe or tubes. Section 1.401(k) envisions that the raceway is "enclosed." The Commission should determine that it is not necessary for the raceway to be enclosed in the sense of being entirely covered. Rather, the wiring is "enclosed" when it is held in place by whatever wire distribution method the ILEC employs. The Coalition requests that, in addition to tubes or pipes, the Commission determine that a system of racks, clips or straps holding wiring in an ILEC central office constitutes a "duct" within the meaning of Sections 1.401(k) of the Commission's rules.

---

[13] Initially, the Commission defined conduit as "a pipe placed in the ground in which cable and/or wires may be installed. *Implementation of Section 703(e) of the Telecommunications Act of 1996*, 13 FCC Rcd 6777 (1998)("*Pole Attachment Order*"). This was later amended to be defined in the current rule as a "structure ... usually placed in the ground." *Amendment of Rules and Policies Governing Pole Attachments*, 15 FCC Rcd 6453, 6523 (2000).

[14] Newton's Telecom Dictionary, 14th Edition, Flatiron Publishing, 1998.

The Commission also should clarify that it is not necessary under the Commission's definitions of conduit and duct for ducts always to be placed in conduit. The Commission should determine that while conduits may contain ducts, ducts or raceways may hold wiring without being in conduits and that conduits may hold wiring without containing any ducts. As a general matter, the Commission should determine that its rules defining duct and conduit do not identify or establish the entire universe of wire distribution systems that telecommunications carriers may access pursuant to Section 224(f)(1). Rather, those rules provide an initial operational identification of some ILEC facilities that are subject to Section 224(f)(1) obligations without intending to identify every ILEC facility that could constitute a duct or conduit. The Commission should determine that any systems used by ILECs to house, run, or support wiring leading into, or in, ILEC central offices constitute duct and conduit within the meaning of Section 224(f)(1).

VI. ILEC CENTRAL OFFICES CONTAIN RIGHTS-OF-WAY SUBJECT TO SECTION 224(F)(1) OBLIGATIONS

In the *Competitive Networks Order*, the Commission determined that rights-of-way, in the context of buildings, include "at a minimum, defined areas such as ducts or conduit that are being used or have been specifically identified for use as part of a utility's transportation and distribution network."[15] Further, the Commission concluded that "a right-of-way exists within the meaning of Section 224, at a minimum, where (1) a pathway is actually used or has been specifically designated for use by a utility as part of its transmission and distribution network and (2) the boundaries of that pathway are clearly defined, either by written specification or by an

---

[15] *Competitive Networks Order* at Para. 76.

unambiguous demarcation."[16] The Commission also found that "where a utility uses its own property in connection with its transmission or distribution network in a manner that would trigger the obligations of Section 224 if it had obtained a right-of-way from a private landowner, we conclude that it should be considered to own or control a right-of-way within the meaning of section 224." [17] The Coalition requests that the Commission determine that these findings also apply to "pathways" used to run wiring and transmission facilities in ILEC central offices.

The Commission also should determine that any wiring or transmission facilities in ILEC central offices extending from or to switches is distribution plant. This is a reasonable result because ILEC transmission facilities and wiring running from switches in central offices are the beginning of distribution plant carrying telecommunications signals throughout the ILEC network. Since wiring in central offices can be considered to be distribution plant, all of the Commission's determinations in the *Competitive Networks Order* regarding pathways constituting rights-of-way subject to Section 224(f)(i) are applicable to ILEC central offices.

However, the Commission should determine that pathways are rights-of-way subject to Section 224(f)(1) regardless of whether it considers wiring inside ILEC central offices to be distribution plant. Assuming that this wiring is not distribution plant, it is noteworthy that the Commission's limitation of its findings in the *Competitive Networks Order* to ILEC distribution plant nevertheless was carefully crafted to extend only so far as necessary to address whether Section 224(f)(1) obligations extended to multitenant buildings ("MTEs"). The Commission interpreted Section 224(f)(1) given the facts presented and the subject matter of that phase of that proceeding – whether ILECs were required to provide CLECs nondiscriminatory access to ducts,

---

[16] *Id.* at Para. 82

[17] *Id.* at Para. 83.

conduit, and rights-of-way owned and controlled by the ILEC in MTEs. Thus, the Commission went no further than finding that rights-of-way under Section 224(f)(1) may exist in ILEC distribution plant. The Commission was careful to add that its finding that Section 224(f)(1) obligations applied to ILEC distribution plant was a finding that these obligations applied under that section "at a minimum."[18] Thus, the Commission carefully left open for a future determination that rights-of-way for purposes of Section 224(f)(1) exist in ILEC central offices even if facilities in the central office are not considered to be distribution plant. Accordingly, the Commission may determine in response to this petition that rights-of-way within the meaning of Section 224(f)(1) exist in ILEC central offices wherever defined pathways are used to run wiring, without in any respect contradicting the *Competitive Networks Order,* even if wiring in ILEC central offices is not considered to be distribution plant.

The Commission should consider pathways inside ILEC central offices to be rights-of-way that CFPs and other telecommunications carriers may access pursuant to Section 224(f)(1) even if such wiring is not distribution plant, because, as noted, the obligations of Section 224 apply regardless of location and because access by CFPs to these pathways would promote the Act's goals for all of the reasons stated above in Section IV.

VII. CFPs MAY ACCESS CENTRAL OFFICE DUCT, CONDUIT AND RIGHTS-OF-WAY WITHOUT COLLOCATING UNDER SECTION 251(C)(6)

Under Section 251(c)(6), ILECs must permit collocation of equipment necessary for interconnection or access to UNEs at the premises of the local exchange carrier. ILECs argue that under Section 251(c)(6), requesting carriers are limited to collocation for the purpose of

---

[18] *Competitive Networks Order* at para. 76

direct interconnection or access to the UNEs of the ILEC.[19] However, Sections 251(b)(4) and 224(f)(1) do not contain any such limitation. Rather, as the Commission has determined, those sections permit access to duct and conduit owned or controlled by the ILEC "without qualification."[20] For all the reasons discussed above, CFPs and other CLECs may access duct, conduit and rights-of-way in, and leading to, ILEC central offices under Sections 251(b)(4) and 224(f)(1). Therefore, under those sections, CFPs and CLECs may obtain such access irrespective of whether they will interconnect with, or access UNEs of, the ILEC. The Coalition requests that the Commission specifically determine that, under Sections 251(b)(4) and 224(f)(1) of the Act, CFPs and other telecommunications carriers may access ILEC duct and conduit in, and leading to, the central office for the purpose of providing service to CLECs collocated there irrespective of whether the CFP will interconnect with, or access UNEs of, the ILEC.

VIII. CLECs COLLOCATED IN ILEC CENTRAL OFFICES UNDER SECTION 251(C)(6) MAY ACCESS ILEC CENTRAL OFFICE DUCT AND CONDUIT TO CROSS-CONNECT WITH OTHER COLLOCATED CLECs

As discussed, it is not a precondition for obtaining nondiscriminatory access to ILEC duct, conduit, or rights-of-way in the central office that the telecommunications carrier collocate in the ILEC central office pursuant to Section 251(c)(6), or directly or indirectly interconnect with the ILEC, or access UNEs of the ILEC. On the other hand, there is no reason under the statute why CLECs collocated under Section 251(c)(6) may not also employ their rights under Sections 251(b)(4) and 224(f)(1) to access duct and conduit in the central office. Therefore, pursuant to Section 224(f)(1), CLECs collocated in ILEC central offices may access duct and

---

[19] See SBC Reply Comments, CC Docket No. 98-147 filed November 14, 2000, pp. 13, 24; BellSouth Reply Comments, CC Docket No. 98-147, filed November 14, 2000, p. 4-5; Verizon Reply Comments, CC Docket No. 98-147, filed November 14, 2000, pp. 4, 6.

[20] *Competitive Networks Order*, para. 80.

conduit for the purpose of interconnecting with other collocated CLECs. In this regard, Sections 251(b)(4) and 224(f)(1) provide an alternative statutory basis for CLEC cross-connection in ILEC central offices, in addition to CLECs' right to cross-connect under Section 251(c)(6). The Commission currently is considering in the *Collocation Remand Proceeding* the extent to which CLECs may cross-connect pursuant to Section 251(c)(6).[21] The Coalition requests that the Commission specifically determine that CLECs may cross-connect in ILEC central offices pursuant to Sections 251(b)(4) and 224(f)(1).

IX. DARK FIBER MAY BE INSTALLED IN ILEC CENTRAL OFFICE DUCT AND CONDUIT

In the *Pole Attachment Order*, which adopted rules implementing the amendments to Section 224 enacted in the Telecommunications Act of 1996,[22] the Commission determined that telecommunications carriers may include dark fiber as part of host attachments.[23] This was affirmed by the United States Court of Appeals for the 11th Circuit.[24] The court noted that dark fiber places no more burden on a pole than do the host attachments because fiber is merely bare capacity included within the host attachment at the time the cable is attached to the pole. In addition, the court presumed that in determining the rent for the host attachment, the Commission and the utility would account for the dark fiber within the attaching host.[25] Accordingly, the court affirmed the Commission's determination that utilities must permit

---

21 *See* n. 3, *supra*.

22 Pub. L. No. 104-104, 110 Stat. 61, 149-151.

23 *Pole Attachment Order*, 13 FCC Rcd 6777, 6811 (1998).

24 *Gulf Power Company v. FCC*, 208 F. 3d 1263 (11th Cir. 2000). *cert. granted on other grounds*, 121 S.Ct. 879 (January 22, 2001).

25 *Id.* 208 F. 3d at 1279.

attachment of dark fiber as part of a host attachment. The Coalition requests that the Commission determine that telecommunications carriers may include dark fiber as part of host attachments in ILEC duct, conduit, and right-of-way leading to, and in, ILEC central offices. The Commission should go a step further, however, and determine that telecommunications carriers may install dark fiber as separate attachments. This is reasonable because ILECs would be subject to compensation for any such attachments.

X. "ACCESS" TO DUCT, CONDUIT, AND RIGHTS-OF-WAY INCLUDES THE RIGHT TO PLACE EQUIPMENT ON ILEC PREMISES

Section 224(f)(1) requires ILECs to provide to telecommunications carriers "nondiscriminatory access to any pole, duct, conduit, or right-of-way owned or controlled by it."[26] Under this section, telecommunications carriers may install wiring and cabling. However, in order to effectively make use of this right, telecommunications carriers must also be able to install, at a minimum, equipment associated with wiring and cabling. For example, telecommunications carriers must be able to install connectors between lengths of wiring and cabling, signal regenerators to assure adequate signal strength, and power supplies adequate to operate electronics attached to wiring and cabling. In fact, telecommunications carriers and cable operators currently are installing equipment pursuant to Section 224(f)(1) in utility ducts, conduit, and rights-of-way, including cabinets and vaults to house some of this equipment.

The Coalition specifically requests that the Commission determine that, as part of their rights to nondiscriminatory access to ILEC duct, conduit, and rights-of-way, CFPs may install connector blocks and distribution frames at a convenient location in the ILEC central office. This equipment is integral to installation of wiring in that it permits connection of subsequent

---

[26] 47 U.S.C. Section 224(f)(1).

runs of wiring. It is functionally identical to the types of equipment that telecommunications carriers already install in ILEC duct, conduit, and rights-of-way pursuant to Section 224(f)(1) in that it permits connection of two segments of wiring. The alternative to this determination would be that CFPs must construct new access facilities each time a CLEC in the central office requests service from the CFP and additionally run separate continuous lengths of fiber to each CLEC in the central office from some point outside of the central office. This not only would impose unnecessary and prohibitive costs on the CFP that could thwart the provision of competitive transport services, but also would contravene standard industry technical practices, which permit, and use, connector blocks or distribution frames between segments of wiring.

The Coalition stresses that this would not result in any unreasonable occupation of ILEC property. As noted, Verizon already permits CFPs to extend wiring into its central offices and install a distribution frame.[27] This is persuasive evidence that this practice is reasonable for ILECs. And, of course, ILECs will be compensated for this use of their ducts, conduit, and rights-of-way under applicable Section 224 pricing rules or on a case-by-case basis.[28] Accordingly, the Commission should determine that CFPs and other telecommunications carriers may, under Sections 251(b)(4) and 224(f)(1), install equipment, including connector blocks and distribution frames associated with installation of wiring and cabling in ILEC central offices.

---

[27] *See* n. 2, *supra*.

[28] In the *Competitive Networks Order*, the Commission noted that existing pricing formulas for pole, duct, conduit, and rights-of-way do not appear to be directly transferable to the context of inside buildings. The Commission stated that to the extent the existing formulas do not apply to inside building situations, that it would determine reasonable and just compensation on a case-by-case basis. The Commission stated that it would consider initiating a rulemaking proceeding to establish rate formulas for in-building attachments in the future if it provides necessary or efficient to do so. *Competitive Networks Order*, para. 91.

XI. SECTION 224(F)(1) APPLIES TO "MANHOLE ZERO"

As discussed, Section 224(f)(1) applies to "any" duct or conduit owned or controlled by the ILEC. Obviously, the system of manholes and underground transmission facility distribution systems leading to the central office constitute duct or conduit. Therefore, that Section applies to "manhole zero," the term used in the industry for the manhole nearest the central office.

It is the Coalition's experience, however, that not all ILECs view "manhole zero" as a facility subject to Section 224(f)(1). Moreover, ILECs affording access to "manhole zero" often do so on a basis that is potentially unreasonably discriminatory. Some ILECs designate a single "manhole zero" for a central office to which telecommunications carriers should extend wiring. In other instances, the ILEC will designate multiple manholes. In many instances, it is not clear what the ILEC practices are in terms of providing access to "manhole zero."

The Coalition requests that the Commission specifically determine that "manhole zero" is subject to the nondiscriminatory access obligation of Section 224(f)(1). Further, the Commission should put ILECs on notice that they should establish reasonable practices concerning designation of, and access to, manholes nearest the central office, including advance notice of these practices.[29] The Commission should state that it will exercise its rulemaking authority to mandate specific practices in this area if ILECs do not otherwise meet their obligation under the Act.

---

[29] Of course, telecommunications carriers under Section 224(f)(1) have a right to access "any" manhole leading to the central offices. ILECs may established preferred manholes for access to central offices, but may not limit telecommunications carriers' rights to access any such manhole.

XII. THE COMMISSION SHOULD GRANT THE PETITION ON AN EXPEDITED BASIS

The Coalition additionally requests that the Commission consider and grant this petition on an expedited basis. As discussed, Section 224(f)(1) provides that ILECs must provide CFPs access to central office duct, conduit, and rights-of-way. At the same time, ILECs for the most part are not permitting CFPs pursuant to those statutory provisions to extend fiber into ILEC central offices to connect with CLECs there or to place associated fiber distribution frames in the central office. Furthermore, many CLECs would like to obtain the benefits of obtaining competitive fiber-based services from CFPs but are frustrated in their ability to do so because of ILEC policies in this area. This, in turn, delays the benefits to consumers, including greater service choices and lower prices, that provision of fiber-based competitive services to CLECs could bring. Accordingly, the Commission should consider and grant this petition on an expedited basis.

XIII. CONCLUSION

For the foregoing reasons, the Commission should promptly grant this petition.

Respectfully submitted,

Andrew D. Lipman
Patrick J. Donovan
Swidler Berlin Shereff Friedman, LLP
3000 K Street, N.W., Suite 300
Washington, D.C. 20007
Telephone: 202-424-7500
Facsimile: 202-424-7645
Counsel for the Coalition of Competitive Fiber Providers

Bruce Frankiewich
Vice President of Legal and Regulatory Affairs
American Fiber Systems, Inc.
100 Meridian Centre - Suite 250
Rochester, NY 14618
Telephone: 716-340-5400

Charles Stockdale
Vice President and Corporate Counsel
Fiber Technologies, LLC
140 Allens Creek Road
Rochester, NY 14618
Telephone: 716-697-5100

Steven Miller
General Counsel
Telseon Carrier Services, Inc.
7887 East Belleview Avenue
Englewood, CO 80111
Telephone: 720-554-7012

Steven Morris
Director, Regulatory Affairs
Global Metro Networks
8401 Colesville Road
Silver Spring, MD 20910
Telephone: 301-578-1900

Theresa Atkins
Assistant General Counsel
Telergy Network Services, Inc.
One Telergy Parkway
East Syracuse, NY 13057
Telephone: 315-362-2882

370349.2

March 15, 2001

CERTIFICATE OF SERVICE

I hereby certify that the foregoing Petition for Declaratory Ruling has been served by hand delivery to the persons on the attached list on this 15th day of March, 2001.

Candise M. Pharr

Candise M. Pharr

VIA HAND DELIVERY

Magalie Roman Salas, Secretary
Federal Communications Commissions
The Portals - TW-A325
445 Twelfth Street, S.W.
Washington, DC 20554

VIA HAND DELIVERY

Janice Myles
Common Carrier Bureau
Policy and Program Planning Division
RM 544
Federal Communications Commission
Washington, DC 20554

VIA HAND DELIVERY

Dorothy Atwood
Chief, Common Carrier Bureau
Federal Communications Commission
Common Carrier Bureau
445 12th Street, S.W. - Suite 5A848
The Portals
Washington, DC 20554

VIA HAND DELIVERY

Susan Ness, Commissioner
Federal Communications Commission
445 12th Street, S.W.
The Portals
Washington, DC 20554

VIA HAND DELIVERY

Jordan Goldstein
Federal Communications Commission
445 12th Street, S.W.
The Portals
Washington, DC 20554

VIA HAND DELIVERY

Rebecca Bynon
Federal Communications Commission
445 12th Street, S.W.
The Portals
Washington, DC 20554

VIA HAND DELIVERY

Kyle Dixon
Federal Communications Commission
445 12th Street, S.W.
The Portals
Washington, DC 20554

VIA HAND DELIVERY

Harold Furchtgott-Roth, Commissioner
Federal Communications Commission
445 12th Street, S.W. - 8TH Floor
The Portals
Washington, DC 20554

VIA HAND DELIVERY

Chairman Michael K. Powell
Federal Communications Commission
445 12th Street, S.W. - 8TH Floor
The Portals
Washington, DC 20554

VIA HAND DELIVERY

Sarah Whitesell
Federal Communications Commission
445 12th Street, S.W.
The Portals
Washington, DC 20554

VIA HAND DELIVERY

Gloria Tristani, Commissioner
Federal Communications Commission
445 12th Street, S.W. - 8TH Floor
The Portals
Washington, DC 20554

VIA HAND DELIVERY

Michelle Carey
Chief, Policy and Program Planning Division
Common Carrier Bureau
Federal Communications Commission
445 12th Street, S.W. - The Portals
Washington, DC 20554

VIA HAND DELIVERY

Kathy Farroba
Deputy Chief
Policy and Program Planning Division
Federal Communications Commission
445 12th Street, S.W. - The Portals
Washington, DC 20554

VIA HAND DELIVERY

Glen Reynolds
Associate Bureau Chief
Common Carrier Bureau
Federal Communications Commission
445 12th Street, S.W. - The Portals
Washington, D.C. 20554

VIA HAND DELIVERY

ITS Inc.
The Portals - 445 12th Street, SW
Washington, DC

VIA HAND DELIVERY

Brent Olsen
Deputy Chief
Policy and Program Planning Division
Federal Communications Commission
445 12th Street, S.W. - The Portals
Washington, DC 20554

VIA HAND DELIVERY

Carol Mattey
Deputy Chief
Common Carrier Bureau
Federal Communications Commission
445 12th Street, S.W. - The Portals
Washington, DC 20554

VIA HAND DELIVERY

William Kehoe
Policy and Program Planning Division
Federal Communications Commission
445 12th Street, S.W. - The Portals
Washington, DC 20554

VIA HAND DELIVERY

Tom Sugrue
Chief, Wireless Telecommunications Bureau
Federal Communications Commission
445 12th Street, S.W. - The Portals
Washington, DC 20554

VIA HAND DELIVERY

James Schlichting
Deputy Chief
Wireless Telecommunications Bureau
Federal Communications Commission
445 12th Street, S.W. - The Portals
Washington, DC 20554

VIA HAND DELIVERY

Diane Cornell
Wireless Telecommunications Bureau
Federal Communications Commission
445 12th Street, S.W. - The Portals
Washington, DC 20554

VIA HAND DELIVERY

Jeffrey Steinberg
Wireless Telecommunications Bureau
Federal Communications Commission
445 12th Street, S.W. - The Portals
Washington, DC 20554

ATTACHMENT A

Figure 12-16. Cabling in telephone equipment buildings. *A*, routed above equipment frames; *B*, routed between floors.

Source: **Engineering and Operations in the Bell System, Bell Telephone Laboratories, Second Edition 1982-1983, Library of Congress Catalog Card Number 83-72956, p. 562**

ATTACHMENT B

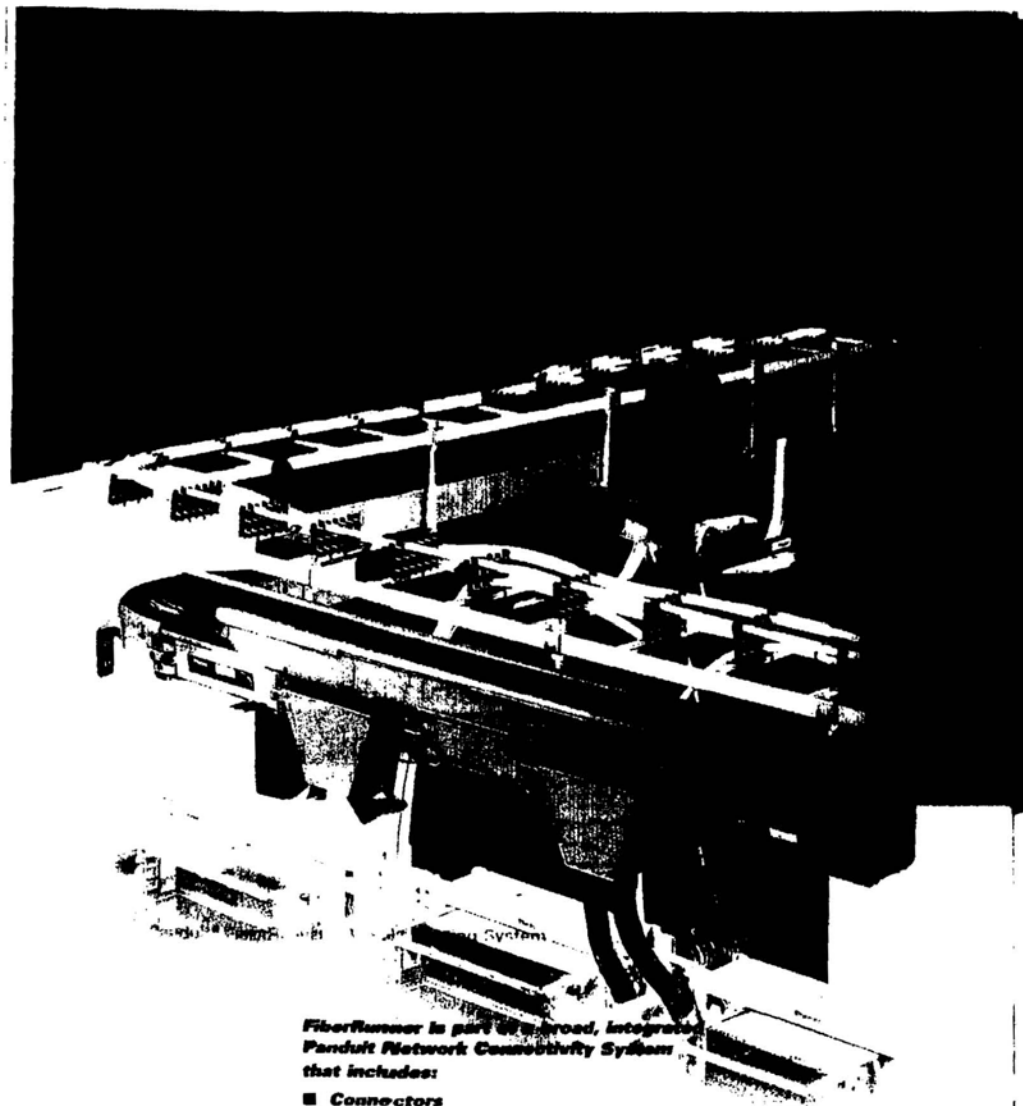

FiberRunner is part of a broad, integrated Panduit Network Connectivity System that includes:

- **Connectors**
- **Outlets**
- **Rack Systems**
- **Fiber Routing Systems**
- **Network Cable Tie Systems**
- **Network Identification Systems**
- **Network Grounding Systems**

Are you ready?

Fiber Optic Cable Routing System

Expanding or updating your network infrastructure to keep up with demand? Don't let your competition get there first. Avoid delays. Get your facilities up and running with lightspeed installations of Panduit's **FiberRunner**™ Fiber Routing System.

As part of Panduit's complete fiber distribution system, the new **FiberRunner** Routing System is the ideal method to route, segregate and protect large amounts of optical fiber cabling between, around and above distribution frames, terminal devices, splice enclosures and other equipment common in service provider facilities.

Be Future Ready with Panduit

FiberRunner Routing System Features:

Panduit's unique **QuikLock**™ Couplers and Mounting Brackets take less than five seconds to make a mechanically secure connection, linking components together faster for lightspeed installations. A sleek look and robust profile ensure an appealing installation strong enough to perform under extreme conditions. Hinged covers provide access for future cabling revisions and additions.

Multiple add-on options provide a system with versatile routing solutions capable of handling a variety of cable management and routing requirements now and in the future.

Cisco Systems
New World Ecosystem

Panduit is a member of Cisco's New World Ecosystem Partner Program.

Panduit
Quality
NETWORK CONNECTIVITY GROUP

Tinley Park, IL 60477 • Phone 708 532 1800 • Fax 708 460 2897
Website: www.panduit.com/ncg • Email: info@panduit.com

ATTACHMENT C

Home
Search
Website index
Course materials
Animations
Figures
Photos
Data files

Photo img3_046

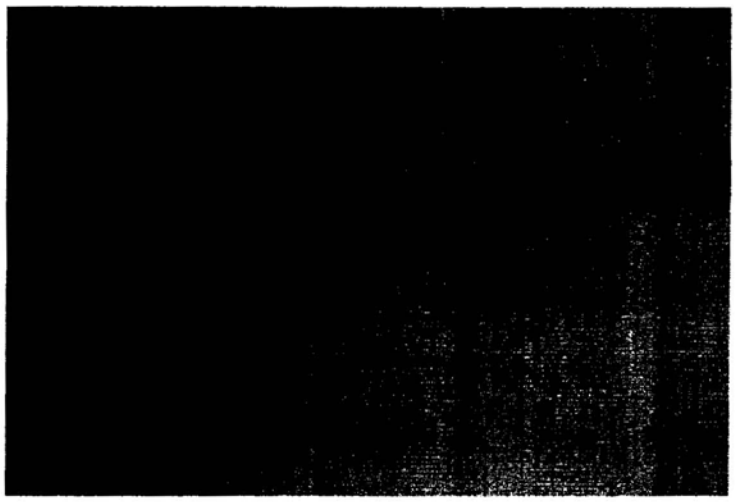

Item information

Caption:	On the left three Ethernet patch cables can be seen. Toward the top and right are conduits which cary various data and telephone cables throughout the building.
Photo:	img3_046
Type:	photo
Item:	Photo img3_046 without textual material
Keywords:	photo img3_046, ethernet, patch cable, conduit
Other sizes:	Photo img3_046 at other sizes - 192x128, 768x512

Photo img3_047

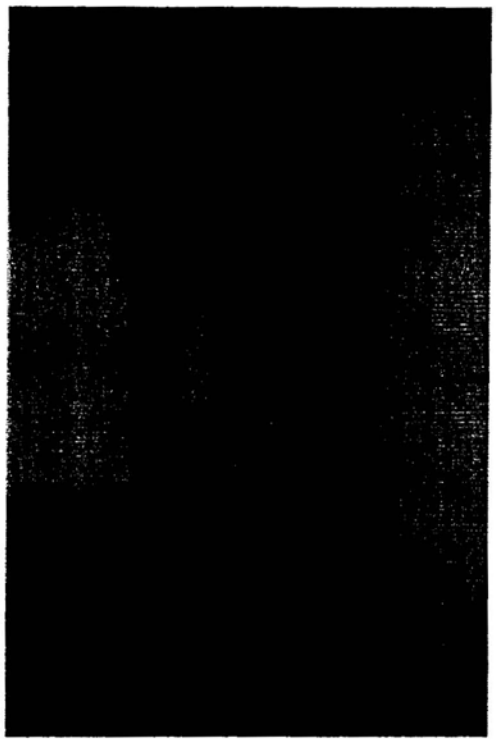

Item information

Caption:	A wiring closet containing, from top to bottom, three patch panels, two Ethernet hubs, and an Ethernet switch.
Photo:	img3_047
Type:	photo
Item:	Photo img3_047 without textual material
Keywords:	photo img3_047, wiring closet, patch panel, ethernet hub, ethernet switch
Other sizes:	Photo img3_047 at other sizes - 192x128, 768x512

Home
Search
Website index
Course materials
Animations
Figures
Photos
Data files

Photo img3_048

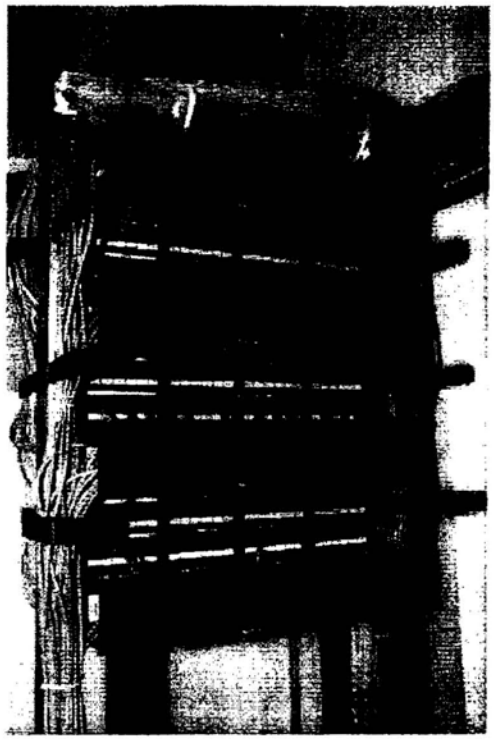

Item information

Caption:	A closeup of the three Ethernet patch cables. The blue cabling is twisted pair Ethernet cable.
Photo:	img3_048
Type:	photo
Item:	Photo img3_048 without textual material
Keywords:	photo img3_048, ethernet, patch cable, 10Base-T
Other sizes:	Photo img3_048 at other sizes - 192x128, 768x512

Home
Search
Website index
Course materials
Animations
Figures
Photos
Data files

Photo img3_049

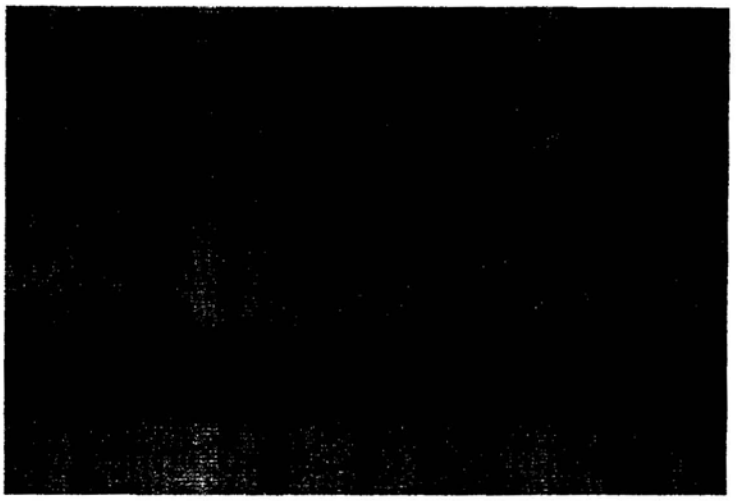

Item information

Caption:	Conduits carrying data and voice lines to other buildings on campus.
Photo:	img3_049
Type:	photo
Item:	Photo img3_049 without textual material
Keywords:	photo img3_049, conduit, voice, data
Other sizes:	Photo img3_049 at other sizes - 192x128, 768x512

Photo img1_064

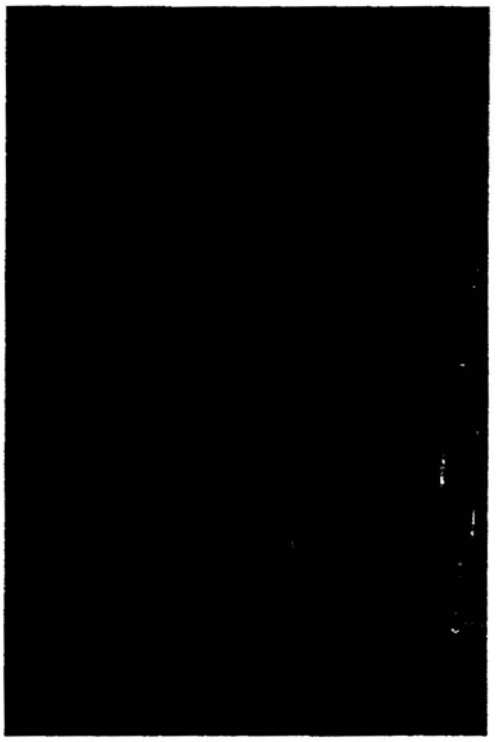

Item information

Caption:	
Photo:	img1_064
Type:	photo
Item:	Photo img1_064 without textual material
Keywords:	image img1_064
Other sizes:	Photo img1_064 at other sizes - 192x128, 768x512

ORIGINAL EX PARTE OR LATE FILED

SWIDLER BERLIN SHEREFF FRIEDMAN, LLP

THE WASHINGTON HARBOUR
3000 K STREET, NW, SUITE 300
WASHINGTON, DC 20007-5116
TELEPHONE (202) 424-7500
FAX (202) 424-7645
WWW.SWIDLAW.COM

NEW YORK OFFICE
THE CHRYSLER BUILDING
405 LEXINGTON AVENUE
NEW YORK, NY 10174
(212) 973-0111 FAX (212) 891-9598

ORIGINAL

May 1, 2002

RECEIVED

MAY - 1 2002

FEDERAL COMMUNICATIONS COMMISSION
OFFICE OF THE SECRETARY

ORIGINAL

VIA COURIER

Marlene H. Dortch, Secretary
Federal Communications Commission
445 12th Street, S.W.
Washington, DC 20554

Ex Parte
CC Docket No. 01-77

Dear Ms. Dortch:

This letter provides additional information in support of the Petition for Declaratory Ruling ("Petition") filed by the Coalition of Competitive Fiber Providers ("Coalition") concerning application of Section 224(f)(1) of the Communications Act of 1934, as amended, to ILEC duct and conduit leading to, and in, ILEC central offices.[1] For the reasons stated herein and in the Petition, the Commission should determine that telecommunications carriers may, pursuant to Section 224(f)(1), terminate multi-strand optical fiber cabling in an Optical Cable Entrance Facility ("OCEF") in the central office vault, extend fiber cabling between the CLECs' collocation space and the OCEF in the vault, and perform fusion splicing at the OCEF in the vault.[2]

An OCEF is a type of fiber distribution frame ("FDF") suitable for use in wet or other hostile environments or otherwise unconditioned space. An FDF is used to terminate, and interconnect, optical fiber cabling. Individual fiber strands in a cable are separated and placed on a frame on the FDF, which permits both efficient identification of each strand and splicing with other fiber terminated on the FDF. FDFs can vary in size depending on how many fiber strands are in the associated optical cabling. A photograph of an OCEF is provided in Attachment A to this letter. As indicated in Attachment A, the largest OCEF offered by Lucent measures only 42" x 30" x 12" and thus would occupy minimal space in the vault.

---

[1] *Pleading Cycle Established for Comments On Petition of Coalition of Competitive Fiber Providers for Declaratory Ruling of Sections 251(b)(4) and 224(f)(1),* Public Notice, CC Docket No. 01-77, DA 01-728, March 22, 2001.

[2] Among other telecommunications services provided by members of the Coalition, Telseon Carrier Services, Inc. provides "managed bandwidth" service.

No. of Copies rec'd 0+2
List ABCDE

It is not acceptable practice to terminate and interconnect multi-strand fiber optic cabling by means of numerous separate splices outside of an FDF. This would unduly complicate identification of individual strands of fiber, and threaten network reliability because fiber must be adequately protected from water and dust and physically supported in a frame to prevent breakage. Further, because an FDF permits ready identification of fiber strands in a cable, FDFs are essential to facilitate disaster recovery.

FDFs are also necessary in contemporary telecommunications networks because it is rarely practical to install continuous runs of fiber between carriers, or between customers and carriers. Instead, an FDF permits efficient configuration and interconnection, including changes in configuration and interconnection arrangements, of fiber optic cabling. For these reasons, industry practice dictates that an FDF is the only practical method for terminating and interconnecting multi-strand optical fiber cabling interconnecting several carriers. Because it is not possible, as a practical matter, to install and maintain fiber without using FDFs, unduly restrictive terms or conditions of use can preclude or hinder use of fiber optic cabling.

The central office vault is a structure, sometimes a room, located in, or immediately adjacent to, the central office that receives cable or wiring from outside the central office. It is usually underground. The vault is the first structure in the central office that receives wiring from the street. Attachment B to this letter presents a diagram showing a typical location of the cable vault in relation to the rest of the central office. Attachment C to this letter provides photographs of the interior of a vault in an ILEC central office showing copper and fiber cabling.

ILECs use their own duct and conduit leading to, and in, ILEC central offices to distribute fiber cabling. ILECs run multi-strand fiber cabling from the manhole nearest the central office ("manhole zero") through duct and conduit under the street to the central office vault. Ordinarily, ILECs do not install continuous runs of fiber from outside the central office to CLECs collocated in the central office because it is impractical to do so for the reasons described above. Depending on individual ILEC practices, the ILEC may terminate the cable in an FDF located in the vault or in an FDF in some other area of the central office. Attachment D is a schematic diagram developed by BellSouth in connection with its technical specifications for unbundled dark fiber showing fiber cable entering the vault and then terminating in an FDF.[3]

Other than Verizon, pursuant to its Competitive Alternate Transport Terminal tariff,[4] ILECs do not permit carriers to terminate multi-strand fiber cabling at an FDF in the central office. SBC and BellSouth permit competitive fiber providers ("CFPs") and other carriers to install an FDF, if at all, no closer to the central office than in a connection point further from the central office than "manhole zero." In many cases, the CFP must create this connection point

---

[3] Unbundled Dark Fiber Technical Specifications, Technical Reference, TR 73603, February 1999, Issue A, p. 8. (Attachment D hereto.)

[4] Verizon FCC Tariff No. 1, Section 19.10.3. A noted by Qwest, Verizon's CATT approach benefits both CFPs and ILECs by, among other reasons, permitting CFPs to use unconditioned space in the central office. Qwest Comments, CC Docket No. 01-77, filed April 23, 2001, p. 13.

itself by creating its own manhole or rebuilding and expanding an ILEC manhole. Upon request of a collocated CLEC, the ILEC will pull individual fiber strands, for a charge, from the CFP's connection point into the vault for termination on an ILEC FDF. Thus, SBC in connection with its Section 271 application for Oklahoma, stated that it will pull CLEC fiber from "the last entrance manhole at the SWBT central office or tandem switch location ...to the SWBT cable vault for termination on the SWBT fiber distribution frame."[5]

The ILECs' limitation on terminating multi-strand fiber cabling in an FDF only in a connection point at some distance from the central office materially and seriously discriminates against CFPs because it delays up to several months the time within which CFPs can provide service, and substantially increases costs to CFPs and their customers. ILECs charge the CFP or CLEC each time they pull a fiber strand into the central office. For an optical cable with 432 fiber strands, this could amount to nearly $1 million in unnecessary charges for utilization of every strand in such a cable.[6] In contrast, as noted, ILECs extend their own fiber cabling directly into the central office for connection to the ILEC FDF. ILECs are able thereby to achieve the efficiencies and substantial cost savings of one pull into the central office per cable, thus gaining a significant cost advantage in providing loop and transport services, in comparison to other facilities-based carriers. These additional charges for multiple pulls into the central office, as well as the significant time delays involved, are totally unnecessary and discourage facilities-based competition. ILEC requirements for multiple pulls also discourage facilities-based competition by causing premature and unnecessary exhaustion of building entrances (conduit and duct) space, which provides ILECs a further justification for denying or delaying access to the central office, which is perhaps ILECs' purpose in imposing these discriminatory requirements.

As discussed, termination of fiber in an FDF is inherent in use of optical fiber cabling, and, therefore, also is an indispensable feature of access to ILEC duct and conduit. Without the ability to use FDFs in an efficient manner in accordance with industry practice, CFPs and other carriers are deprived of meaningful access to ILEC duct and conduit. The Coalition requests that the Commission determine that the prohibition on termination of multi-strand fiber in an FDF in the central office violates the nondiscrimination obligations of Section 224(f)(1). In order to provide nondiscriminatory access to ILEC duct and conduit as required by Section 224(f)(1), ILECs must permit CFPs and other telecommunications carriers to install multi-strand fiber cabling in central office duct and conduit and terminate it in an FDF on approximately the same terms and conditions that would apply to the ILECs' use in their own operations.

However, it is not necessary for CFPs and other carriers to terminate fiber in an FDF in precisely the same locations in the central office as ILECs, although this could be required under the nondiscrimination standard of Section 224(f)(1). Instead, current ILEC practices which

---

[5] Affidavit of William C. Deere on Behalf of Southwestern Bell Telephone Co., CC Docket No. 00-217 p. 9.

[6] Verizon under its CATT tariff permits CFPs to terminate 432 strand fiber cabling at an FDF in the central office. Verizon Tariff FCC No. 1 Section 19.10.3 (B).

unlawfully restrict access to duct and conduit could be sufficiently corrected if ILECs are required to permit termination of fiber cabling in an FDF in the central office vault, or, if no space is available in the vault, in an area near the vault. In addition, the Commission should determine that CFPs and CLECs may, pursuant to Section 224(f)(1), access ILEC duct and conduit in the central office in order to extend fiber between the CLECs' collocation space and the OCEF in the vault. Similarly, ILECs must permit CFPs and other carriers to perform fusion splicing in order to provide nondiscriminatory access to duct and conduit as required by Section 224(f)(1). Fusion splicing is the standard industry method for splicing fiber on FDFs, and ILECs routinely perform fusion splicing in the vault.[7]

The Commission may make these requested determinations in order to assure meaningful and nondiscriminatory access to ILEC duct and conduit, as required by Section 224(f)(1). Furthermore, the central office vault constitutes conduit under the Commission's rules. Section 1.1401(i) of the Commission's rules defines conduit as "a structure containing one or more ducts, usually placed in the ground, in which cables or wiring may be installed." As noted, the ILEC central office vault is usually below ground and serves the purpose of receiving and holding cabling that enters the central office from the street. It is a structure in which cables and wiring are installed. Thus, central office vaults fall squarely within the Commission's definition of conduit, and, requiring that ILECs permit installation of OCEFs in vaults does not involve occupation of ILEC property other than duct and conduit. Therefore, the Commission may require ILECs to permit termination of fiber on an FDF in the vault in order to assure nondiscriminatory access to ILEC duct and conduit.

In addition, as discussed in the Petition, the facilities leading to, and in, ILEC central offices used to hold, support, and distribute cabling constitute duct and conduit. ILECs' tariffs, among other ILEC documents, describe these facilities in ways that make clear that the central office has numerous wiring distribution systems that constitute duct and conduit. Thus, Ameritech's access tariff imposes charges for use of central office "entrance conduit" and "innerduct," which it describes as extending from outside the central office to a splice point in the vault.[8] Ameritech also describes charges for pulling cable through the "riser," which it describes as running from the vault to the customer's collocation space in the central office.[9] Verizon, in its interstate access tariffs, describes facilities used to distribute CLEC fiber from the vault to central office equipment as "tubing."[10] Verizon also states that it will install CLEC fiber in the "Cable Support Structure" running from the vault to the collocation space.[11] ILECs' descriptions of these structures, whether as tubing, innerduct, conduit, risers, or cable support structures, and their function as permitting fiber to be pulled through them, are an admission that

---

7 *See. e.g.* Verizon FCC Tariff No. 1, Section 19.3.5(B)(4), effective April 28, 2001.

8 Ameritech Operating Companies, FCC Tariff No. 2, Section 16.3.6(B)(1)-(6).

9 *Id.*

10 Verizon FCC Tariff No. 1, Section 19.3.5(B)(4), effective April 28, 2001.

11 *Id.*

Rochester, NY 14618
Telephone: 716-697-5100

Steven Miller
General Counsel
Telscon Carrier Services, Inc.
7887 East Belleview Avenue
Englewood, CO 80111
Telephone: 720-554-7012

cc: Kyle Dixon
Matthew Brill
Jordan Goldstein
Dan Gonzalez
Dorothy Attwood
Jeffrey Carlisle
Christopher Libertelli
Michelle Carey
Eric Einhorn
Brent Olson
William Kehoe
Jack Yachbes
Linda Kinney
Debra Weiner

these structures are duct and conduit. It is disingenuous, therefore, for ILECs in their comments in this proceeding to have represented to the Commission that their central offices contain no duct or conduit.[12] As explained in the Petition, all of these wiring distribution systems constitute duct and conduit within the meaning of the Commission's rules.

Accordingly, the Coalition requests that the Commission determine that telecommunications carriers may, pursuant to Section 224(f)(1), terminate multi-strand optical fiber cabling in an OCEF in the central office vault, extend fiber cabling from the vault to CLECs collocated in the central office, and perform fusion splicing at the OCEF in the vault, or other location of the OCEF.

Sincerely,

Patrick J. Donovan
Counsel for the Coalition of Competitive Fiber Providers

Bruce Frankiewich
Vice President
Legal and Regulatory Affairs
American Fiber Systems, Inc.
100 Meridian Centre - Suite 250
Rochester, NY 14618
Telephone: 716-340-5400

Lisa Lutz
Corporate Counsel
City Signal Communications, Inc.
5 Great Valley Parkway
Suite 180
Malvern, PA 19355
Telephone: 484-527-0140 ext. 201

Steven Crawford
General Counsel
El Paso Global Networks, LLC
1001 Louisiana Street
Houston, TX 77002
Telephone:

Charles Stockdale
Vice President and Corporate Counsel
Fiber Technologies, LLC
140 Allens Creek Road

---

[12] BellSouth Comments, CC Docket No. 01-77, filed April 23, 2001, p. 5.

ORIGINAL

ATTACHMENT A

Optical Cable Entrance Facility (OCEF)

EF1-720/42 Side-Entry OCEF

The Optical Cable Entrance Facility (OCEF) cabinets are water-resistant enclosures intended for storing a large number of fiber splices between OSP and building-type cables in vault locations. The cabinets accommodate Lucent Lightpack, riser, and Building Cable sizes from 0.25-inch to 1.0-inch OD (0.64 to 2.54 cm).

The cabinet is designed to accommodate multiple cable sheaths through ports in the bottom, sides, and top. Cable entry ports are sealed, resulting in a National Electrical Manufacturers Association (NEMA) 4/12/13 rating — which means this unit provides protection against dust and water spray. Each cabinet incorporates a hinged, removable, lockable door that provides additional security.

The cabinet accepts the standard splice organizer tray, allowing complete access to any splice without disturbing other splices. The splice tray provides integrated strain relief for all types of fiber cable and buffer construction. Splice trays are designed for mechanical or fusion splices. The OCEF comes with a self-contained workshelf.

The OCEF enclosures are provided in two sizes. Each size OCEF may be ordered for either side entry or top and bottom entry.

OCEF Dimensions and Capacities

Product Code	Height	Width	Depth	Weight	# of Splices	# of Cables
OCEF1-288/22	22" (55.88 cm)	30" (76.2 cm)	12" (30.48 cm)	100 lb. (220.5 kg)	288	48
OCEF2-288/22	22" (55.88 cm)	30" (76.2 cm)	12" (30.48 cm)	100 lb. (220.5 kg)	288	24
OCEF1-720/42	42" (106.68 cm)	30" (76.2 cm)	12" (30.48 cm)	175 lb. (385.8 kg)	720	84
OCEF2-720/42	42" (106.68 cm)	30" (76.2 cm)	12" (30.48 cm)	175 lb. (385.8 kg)	720	24

Mar 25 02 04:45p p.2

ATTACHMENT B

(see page 3)

oOutside Plant Basics

TelecomWriting.com
Sponsored by
Aslan Technologies, Inc.

TelecomWriting.com Home

E-mail me!

- Telephone history series
- Mobile telephone history
- Telephone manual
- Digital wireless basics
- Cellular telephone basics
- Jade Clayton's pages
- Dave Mock's pages
- Seattle Telephone Museum
- Telecom clip art collection
- Britney Spears & telephones
- Bits and bytes
- Packets and switching

Search TelecomWriting.com Advanced search

The Wired Local Loop/ Books on OSP?/ Link to a Digital Loop Carrier Tutorial / The Wireless Local Loop / Norman Rockwell and OSP (really neat) / Outside Plant -- A Woman's Experience

The Basic Elements of Outside Plant

A single wire does not run from your house to the central office. A communication path is maintained, instead, by a collection of wires and cable, mostly twisted pair, often in large bundles, that connects like a chain to different equipment. Let's take one common example.

We'll follow your phone line from your house to the nearest CO or central office. This example combines aerial and buried plant. Let's assume that you live in an older neighborhood in a medium sized town. The kind with telephone cable running through the neighborhood's backyards on poles.

1. Telephone wiring inside your house first connects to the telco's wire at the *house protector* or *station protector*. This is the *demarcation point*. Your wiring ends here and the telco wiring begins.

1. The Demarcation Point

2. From here a *drop wire* containing several twisted pair goes to a *pole closure, an aerial terminal* or *ready access terminal*. Call it what you will, this is the termination of the subscriber's drop wire. Drop wires can be thirty feet long or thousands of feet in length. They contain several twisted pair, only the oldest drops containing a single twisted pair.

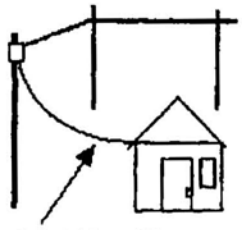

2. Aerial Drop Wire

3. The customer's twisted pair is connected to binding posts within the enclosure. Depending on the enclosure, a wire representing your twisted pair may now be connected to the aerial cable servicing your neighborhood. This sort of enclosure is inline with the aerial cable and may serve as a connecting or splice point. Or, a wire from the back of the enclosure may run to a *splice case* nearby. This marries the enclosure's wire with the larger aerial cable that services your area.

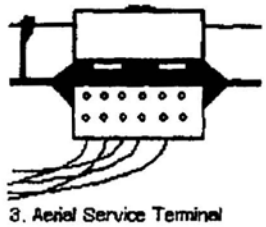

3. Aerial Service Terminal

4. This cable contains at least 50 pairs, commonly 100 or more. It's called *distribution cable* or *aerial cable* or F2 for being the *secondary feeder cable*. Several F2 cables may work their way back to the nearest SAI.

Click here for a picture of a standard aerial service terminal

And here's a picture of an aerial service terminal for fiber optic cable

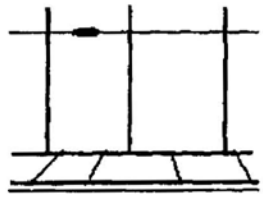

4. Aerial cable or F2

5. These F2 cables go underground via conduit before connecting to the *serving area interface*. In some areas the feeder does not go underground but is carried directly by the poles to the Serving Area Interface, which is described next.

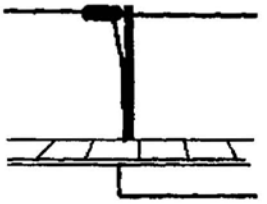

5. Distribution cable goes underground

6. The SAI or serving area interface. A big terminal block. Called B-Boxes, cross-connect boxes and APs, or Access Points. Whatever! Those ubiquitous gray-green cabinets you see nearly everywhere. They are usually mounted on the ground but can also be located on poles. F2 cable pairs connect with F1 pairs at this point. It's here that the individual twisted pairs are terminated. F1 or main feeder cables then go underground in conduit, usually to the nearest central office or remote switch. Or first to transmission equipment like a multiplexer and then to the C.O.

Click here for a picture of a typical cross connect box.

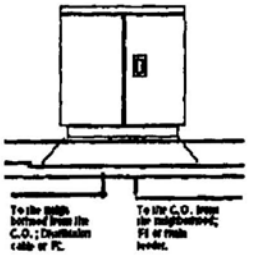

6. The Serving Area Interface

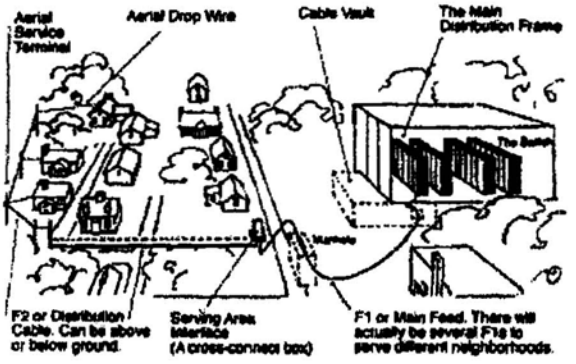

Once your signal hits the telephone switch it gets converted from an analog signal to a digital one. Although exceptions may exist, all traffic

in America between telephone switches is now digital. Only traffic in the local loop as described above remains analog, but, again, everything goes digital once it hits a switch.

Courtesy of Jade Clayton's Telecom Dictionary:

1.) Picture of a central office distribution frame

2.) Picture of a cable vault

Resources

If you want to know what those strange looking telco cabinets and housings are for, the ones you see around your neighborhood, go to Marconi's site and take a look at their product catalog. Great learning:

http://www.marconi.com/html/solutions/outside plant.htm

Here's another good company site:

http://media.telecomosp.com/downloads/pdf/copper/ds/dsacbs.pdf

Outside plant specifications, both aerial and buried. Detailed info:

http://www.usda.gov/rus/telecom/publications/bulletins.htm (external link)

The following describes, extensively, *inside* building procedures for telecom. You should take a look.

http://www.wa.gov/doc/Content/Telecom/Index.html

A comment . . .

"The problem with OSP is that everyone forgets it's still the basic core for the majority of telephony. Some think that Digital is all there is -- but you still have to have the local loop F1 (fiber or copper) for the span line, the system, and the F2 distribution loop to the customer. Or people think wireless is all there is. All the latest technology is very important but it won't replace the local loop for decades to come. Maybe never really."

"My friends in OSP say that we are the forgotten children or the step-children. But the telephone company can't function without us. We are the working grunts however. While IOF (inter-office facilities), Switch, and Wireless think *they* are all of it, they actually have just one piece of the pie."

Our anonymous OSP authority. . .

Digital Loop Carrier Tutorial

This telco.com tutorial seems good. It starts out this way,

"This tutorial-level presentation OF Digitall loop carrier (DLC) technology is for both nontechnical readers and the technically versed who lack network applications experience. It describes DLC technology with a focus on the primary motivations for its development. Other topics include a comparison to channel bank technology, the organization of DLC technology in North America, and a comparison of universal digital loop carrier (UDLC) and integrated digital loop carrier (IDLC) technologies. The concluding topic illustrates a functional equivalence between DLC and fiber-in-the-loop technologies. Although three generations of DLC technology have brought an abundance of features and capabilities, this paper sticks to the basics to remain instructional. Discussion is limited to North American DLC technologies. . . .

http://www.telco.com/products_solutions/WhitePapers/digital/page1.html (external link)

Books on OSP?

It is absolutely impossible to find books on OSP. I have one, Lee's, but it is quite dated. You'll be lucky to find any of the titles below. Try OSP Magazine instead. GTE also had a book or a series but I don't even have a title for it. This is all the information I have on these long out of print books, you may have to search Amazon, e-bay, and abe.com just to find one. Don't forget, though, this resource I mentioned above:

http://www.usda.gov/rus/telecom/publications/bulletins.htm (external link)

Books

Outside Plant, Frank K. Lee. Quite dated. Far too much on open wire construction.

Available here, along with many other tutorial books and videos:

http://www.abcteletraining.com/trainingmanuals.htm (external link)

Outside Plant Construction: Cable Maintenance Methods, Bell System. I am not sure whether this is a series or not, I think so. See the title below which suggests that it is.

Handbook Of Outside Plant Engineering, AT&T.

Standard Outside Plant Construction Methods., Book 1, Section 1--

Pole line construction. Compiled, edited, and produced by Kellogg switchboard and supply co. Chicago, Kellogg switchboard and supply co. [c1945] 1 v. incl. illus, tables, diagrs. 11 1/2 x 18 1/2cm.

Outside Plant Magazine (external link) is an excellent resource. Look for the numerous, helpful files in their back issue section. Many topics covered from an OSP point of view. Well worth checking out!

The Wireless Local Loop

I haven't written on the wireless local loop, but Nathan Muller sure has. Check out his excellent introduction to WLL in a chapter from the McGraw Hill Mobile Telecommunications Factbook.

Chapter 9, The Wireless Local Loop (7 pages, 280K in .pdf)

Reviews and Ordering information (external link to Amazon.com)

The Wired Local Loop/ Books on OSP?/ Link to a Digital Loop Carrier Tutorial / The Wireless Local Loop / Norman Rockwell and OSP (really neat)

---

abebooks.com

The best selection of used books on the web is at http://www.abe.com. Period. No argument. Advanced Book Exchange is an association of hundreds and hundreds of independent book sellers. I do not get a commission from them

because they do not have an affiliate program yet. But I've used and recommended them since late '95; you will be very happy with them.

TelecomWriting.com Home

E-mail me!

Current wireless news, reports and stock information gathered by ITtoolbox.com (Clicking here will not take you away from TelecomWriting.com)

TelecomWriting.com: West Sacramento, California USA

ATTACHMENT C

ATTACHMENT C

Picture 1

Picture 2

Picture 3

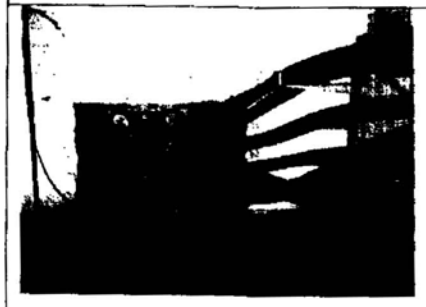

Picture 4

Picture 5

Picture 6

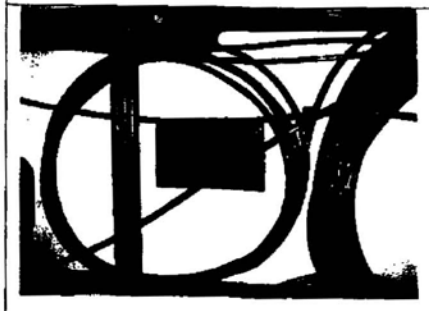

Picture 7

Picture 8

Picture 9

ORIGINAL

ATTACHMENT D

(see pg. 8)

BELLSOUTH
TELECOMMUNICATIONS

TR 73603

Unbundled Dark Fiber (UDF) Technical Specifications

Technical Reference

February, 1999
Issue A

NOTICE

This Technical Reference describes Unbundled Dark Fiber (UDF). This Unbundled Network Element (UNE) can provide a Competive Local Exchange Carrier (CLEC) a fiber transmission path between customer designated preimises and a BellSouth Telecommunications, Inc. (BST) Serving Wire Center or between BST Central Offices.

BellSouth Telecommunications, Inc., reserves the right to revise this document for any reason, including but not limited to, conformity with standards promulgated by various governmental or regulatory agencies, utilization of advances in the state of the technical arts, or the reflection of changes in the design of any equipment, techniques, or procedures described or referred to herein. Liability to anyone arising out of use or reliance upon any information set forth herein is expressly disclaimed, and no representations or warranties, expressed or implied, are made with respect to the accuracy or utility of any information set forth herein.

This document is not to be construed as a suggestion to any manufacturer to modify or change any of its products, nor does this document represent any commitment by BellSouth Telecommunications, Inc., to purchase any product whether or not it provides the described characteristics.

Nothing contained herein shall be construed as conferring by implication, estoppel or otherwise, any license or right under any patent, whether or not the use of any information herein necessarily employs an invention of any existing or later issued patent.

If further information is required, please contact:

Director – Transport Systems Engineering
BellSouth Telecommunications, Inc.
1884 Data Drive
Birmingham, Alabama 35244

© BellSouth Telecommunications, Inc., 1999
Printed in the U.S.A.

Unbundled Dark Fiber (UDF) Technical Specifications

CONTENTS

1. General 1
   1.1 Scope 1
   1.2 Use of This Document 1
2. Service Description 1
3. Network Rearrangements 1
4. Fiber Transmission Media 2
   4.1 Operating Wavelengths 2
   4.2 Typical Performance Characteristics 2

Table 1 – Typical Technical Characteristics of BST Optical Fiber and Components 2

5. Mechanical Interface 2
   5.1 Optical Fiber Termination and Arrangement 3
6. Optical Power Limitations 3
7. Engineering Design Information 3
8. Regeneration 4
9. Safety Requirements 4

Table 2 – IEC 825–1 and 825–2 Classes of Lasers, Power Limits & Safety Requirements 5

10. Maintenance 6
11. References 6

Figure 1 – Unbundled Dark Fiber Customer Premises to BST Serving Wire Center 8
Figure 2 – Unbundled Dark Fiber BST Central Office to BST Central Office 9
Figure 3 – Fiber Optic Mechanical Network Interface 10
Figure 4 – Optical System Reference Points (Points S and R) 11

Unbundled Dark Fiber (UDF) Technical Specifications

1. General

This document provides the technical specifications for Unbundled Dark Fiber (UDF) offered by BellSouth Telecommunications, Inc. (BST). This Unbundled Network Element (UNE) can provide a Competitive Local Exchange Carrier (CLEC) a fiber transmission path between a customer designated premises and a BST Serving Wire Center or between BST Central Offices. This service is sometimes referred to as Dry Fiber service but will be referred to as Dark Fiber service in this document. The term "dry" applies to the absence of DC power, whereas the term "dark" applies to the absence of regeneration.

1.1 Scope

This Technical Reference (TR) provides the technical specifications necessary for compatible operation between BST and CLECs. The requirements in this document were developed to establish a practical interface. Compliance with these specifications should provide a satisfactory interface in a high percentage of installations. If cases arise that have not been adequately addressed in this document, any resulting problems should be resolved through the cooperation of the user, BST and suppliers. BST encourages customer participation to ensure an orderly, functional and mutually trouble–free interface at all locations.

1.2 Use of This Document

Technical specifications have been established based upon Industry Standards developed by the American National Standards Institute (ANSI) and Bellcore. This TR articulates BST variations from these standards and provides clarification of specification and performance requirements as necessary.

2. Service Description

UDF service is offered as a point–to–point arrangement between a customer designated premises and BST Serving Wire Center or between BST Central Offices. UDF is offered without signal regeneration to compensate for signal losses. The service arrangement consists of four optical fibers and fiber terminating equipment as shown in Figure 1 and 2. UDF service will be routed through a BST Central Office for testing and maintenance functions. Current polices concerning recombination will be adhered to.

3. Network Rearrangements

BST reserves the right to rearrange its network and to modify the manner in which it provides service in order to meet its overall service requirements. This includes, but is not limited to, the right to engineer and construct its fiber optic facilities in accordance with its normal operations without the requirement to modify its materials, splicing techniques, or planned facility rearrangements to suit a specific customer request.

4. Fiber Transmission Media

UDF service shall be provided via single-mode fiber with a nominal zero dispersion wavelength at 1310 nanometers. The conventional dispersion-unshifted single-mode fiber (also known as EIA/TIA Class IVa fiber) shall generally meet the requirements detailed in Bellcore GR-20-CORE, *Generic Requirements for Optical Fiber and Optical Fiber Cables*, and ITU Recommendation G.652, *Characteristics of a Single-Mode Optical Fiber Cable*.

4.1 Operating Wavelengths

The service is provided over BST single-mode fiber optic cable which support operating wavelengths of 1310 nanometers (nm) and 1550 nm.

4.2 Typical Performance Characteristics

Table 1 provides typical characteristics of optical fiber and components commonly utilized in BST's network:

Table 1 – Typical Technical Characteristics of BST Optical Fiber and Components

Wavelength λ	1310 nm	1550 nm
Typical Fiber Loss	0.5 dB/km	0.35 dB/km
Discrete Reflectance (Splices, Connectors)	−40.0 dB	−40.0 dB
Return Loss (Fiber Cable)	+24.0 dB	+24.0 dB
Medium Zero Dispersion Wavelength	1310 ± 3 nm	Not Applicable
Chromatic Dispersion (Fiber Cable)	3.5 ps/nm−km	18.0 ps/nm−km
Chromatic Dispersion Slope (Fiber Cable)	0.093 ps/(nm−km^2)	0.093 ps/(nm−km^2)
Polarization Mode Dispersion (Fiber Cable)	10 ps	10 ps

The transmission characteristics of a specific UDF application may differ from the above typical performance characteristics.

5. Mechanical Interface

At the four fiber Network Interface (NI), BST will provide duplexable SC type (EIA/TIA SCFOC/2.5) plug and jack type connectors. BST will install the connector jack to serve as the NI. BST and the customer must each provide connector plugs to terminate their fibers at the NI. Each connector plug will contain 2 fibers, one for each direction of transmission. The connector jack will be the demarcation point between BST and the Customer Installation (CI). Figure 3 depicts the Fiber Optic Mechanical Network Interface.

5.1 Optical Fiber Termination and Arrangement

Optical fibers are terminated at the customer premises in a BST approved and constructed cabinet or Fiber Distributing Frame (FDF). BST typically uses a "tray" type splice on the customer premises and connectorized fibers from that splice to the cabinet or FDF.

6. Optical Power Limitations

Customer provided lasers shall not exceed +17.0 dBm in output power at 1550 nm (Class IIIb laser). In addition, the customer shall tell BST which class of laser (see Section 9) that they will be utilizing on their equipment.

7. Engineering Design Information

BST uses a design approach based on EIA/TIA–559, *Single–Mode Fiber Optic System Transmission Design,* and GR–253–CORE, *Synchronous Optical Network (SONET) Transport Systems: Common Criteria Physical Layer,* procedures for elements in its network.

For the purpose of optical parameter specifications, optical interfaces are referred to the Optical System Reference Diagram (Points S and R) as shown in Figure 4.

Point S is a reference point on the optical fiber just after the transmitter (Tx) optical connector(C_{Tx}). Point R is a reference point on the optical fiber just before the receiver (Rx) optical connector (C_{Rx}). Points S and R provide a convenient separation of the optical link into a transmitter subsection, a receiver subsection, and an optical path subsection. Optical parameters are specified for the transmitter at point S, for the receiver at point R, and for the optical path between Points S and R. All parameter values specified are worst–case values and are to be met over the ranges of standard operating conditions (i.e., temperature and humidity ranges); they include aging effects. The parameters are specified relative to an optical section design objective of a bit error ratio (BER) better than $1x10^{-10}$.

To ensure proper system performance it is necessary to specify attenuation and dispersion characteristics of the optical path. This specification is assumed to represent worst–case values including losses due to splices, connectors, optical attenuators (if used), or other passive optical devices, and any additional cable margin to cover allowances for the following:

(1) future modifications to the cable configuration (additional splices, increased cable lengths, etc.),

(2) fiber cable performance variations due to environmental factors, and

(3) degradation of any connector, optical attenuator (if used), or other passive optical device when provided.

For customer design purposes, BST will provide the following information, when it is available:

- Length of the fiber cable including 3% extra for possible cable reroute.
- Loss budget value in decibels/kilometer (dB/km) of fiber cable at $\lambda = 1310$ nm or $\lambda = 1550$ nm.
- Number of splices constructed and anticipated number of maintenance splices.
- Loss budget value of each splice in dB/splice.
- Loss budget value of single–mode fiber jumper in dB/jumper.

- Loss budget value of jumpers and connectors at the Lightguide Terminal Interconnect Equipment (LTIE) in dB at customer premises.
- Loss budget values of jumpers and connectors in dB used to connect fibers in BST office(s).

Note: **Loss Budget Values are end–of–life values which account for aging and are usually greater than actual measured values.**

8. Regeneration

UDF service is offered without regeneration, so it will be incumbent that the customer maintain, adequate margins to insure proper working of the fiber optic system.

9. Safety Requirements

The fiber optic system and required optical test equipment used in conjunction with UDF service must be registered and certified with the Department of Health, Education and Welfare Bureau of Radiological Health as specified in 21 CFR 1040.10. This document specifies performance requirements, labeling requirements and informational requirements. Documentation demonstrating system certification shall be available to assist in the determination of fiber optic safety precautions required to install, operate and maintain the system.

Optical powers from lasers are also classified by the International Electrotechnical Commission (IEC). Depending on the potential danger, IEC 825 requires that all laser equipment be classified into one of the following classes; 1, 2, 3a, 3b, or 4. Because the minimum power limits for class 4 lasers are not used in telecommunications, they are not considered for the purposes of this document. The other classes of lasers, the power limitations and the accompanying safety requirements are summarized in Table 2 on the following page.

Table 2 – IEC 825–1 and 825–2 Classes of Lasers, Power Limits & Safety Requirements

Laser	Maximum Power Levels		Safety Requirements
	1310 nm	1550 nm	
Class 1	9.4 dBm	10.0 dBm	Inherently Safe • Protective housing to prevent higher than classified emission. • Safety interlock in the housing to prevent access to non–classified emission levels. • Classification labels on the product and in the promotional literature. • Caution labels on service panels, interlocked or not • User safety information in operator and service manuals.
Class 2[1]	NA	NA	NA
Class 3a	13.8 dBm	17.0 dBm	Safe unless viewing aids are used Additional requirements to all of the above: • Key control • Beam stop to automatically disable the laser if no access is required. • Audible or visible "Laser On" warning.
Class 3b	27.0 dBm	27.0 dBm	Additional requirements to all of the above: • Remote control switch to allow disabling the laser by a door circuit. • Aperture label to indicate the location of the radiation output.

Special precautions and requirements for installation and use of optical systems (including amplifiers) and a description of viewing aids are given in IEC 825–2.

[1] Class 2 is used for visible laser products emitting wavelengths from 400 to 700 nm, these requirements are not considered pertinent.

10. Maintenance

The customer must cooperatively disable (turn–off) any optical transmission equipment on a dark fiber arrangement whenever BST must perform maintenance on those facilities.

11. References

GR–20–CORE, Generic Requirements for Optical Fiber and Optical Fiber Cable, Issue 1, September, 1994

GR–63–CORE, Network Equipment–Building System (NEBS), Generic Equipment Requirements, Issue 1, October 1995

GR–253–CORE, Synchronous Optical Network (SONET) Transport Systems: Common Criteria Physical Layer, Issue 2, December 1995

GR–326–CORE, Generic Requirements for Single–Mode Connectors and Jumper Assemblies, Issue 2, December 1996

Bellcore Technical References may be ordered by contacting:
Bellcore Customer Relations
8 Corporate Place – Room 3A–184
Piscataway, NJ 08854–4156
1–800–521–2673

EIA/TIA–559, Single–Mode Fiber Optic System Transmission Design

OFSTP–2, Effective Transmitter Output Power Coupled into Single–Mode Fiber Optic Cable

OFSTP–3, Fiber Optic Terminal Receiver Sensitivity and Maximum Receiver Input

OFSTP–10, Measurement of Dispersion Power Penalty in Single–Mode Systems

OFSTP–11, Measurement of Single Reflection Power Penalty for Fiber Optic Terminal Equipment

EIA/TIA documents may be ordered by contacting:
Telecommunications Industry Association
Engineering Department
2001 Pennsylvania Avenue N.W.
Washington, D.C. 20006
(202) 457–4966

IEC 825-1, Safety of Laser Products, Part 1: Equipment classification, requirements and user's guide, First Edition, 1993-11

IEC 825-2, Safety of Laser Products, Part 2: Safety of optical fiber communication systems, First Edition, 1993-09

ANSI Z136.2-1998, American National Standard for the Safe Use of Optical Fiber Communications Systems Utilizing Laser Diode and LED Sources

IEC and ANSI documents can be ordered from:
Global Engineering Documents
15 Inverness Way East
Englewood, CO 80112-5704
(800) 854-7179

21 CFR 1040, Performance Standard for Laser Products

This document may be obtained by contacting:
Director, Division of Compliance
Bureau of Radiological Health
5600 Fishers Lane
Rockville, MD 20857

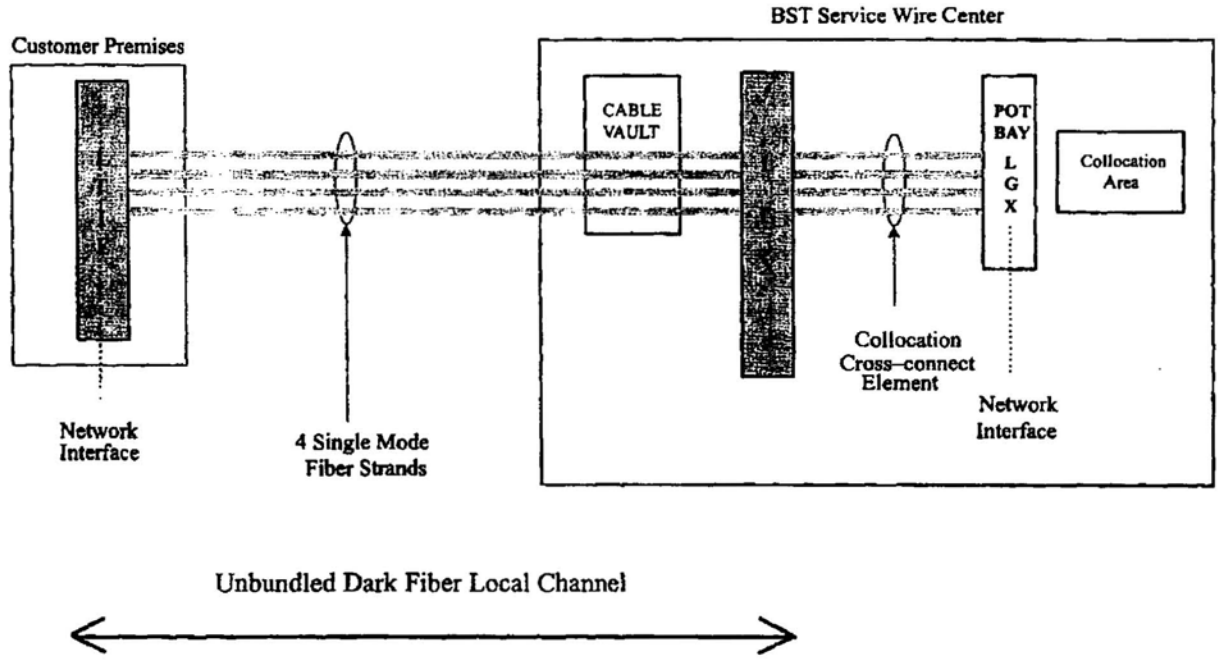

LTIE	Lightguide Terminal Interconnection Equipment
LGX	Fiber Distribution Frame
POT BAY	Point of Termination Bay

Note: The arrangement shown above is applicable to Physical Collocation. Current polices concerning recombination of elements will be adhered to.

Figure 1 – Unbundled Dark Fiber Customer Premises to BST Serving Wire Center

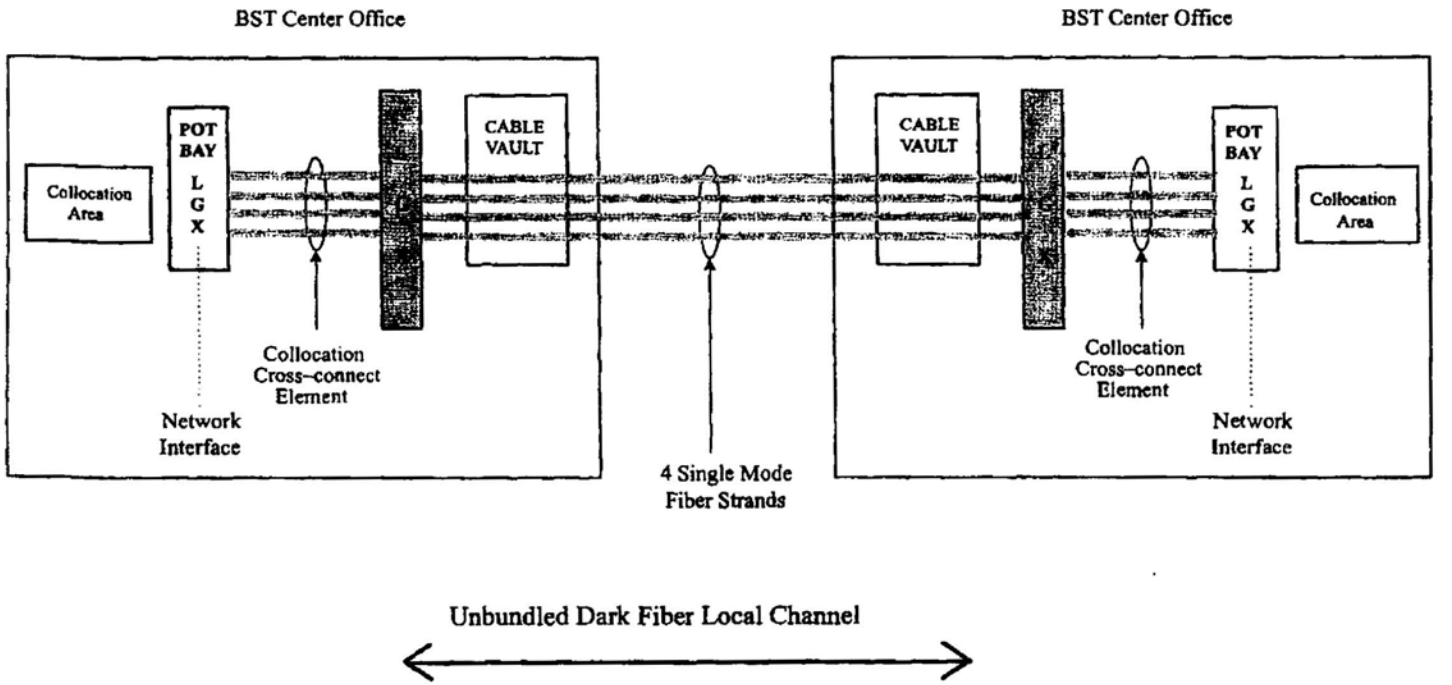

LTIE	Lightguide Terminal Interconnection Equipment
LGX	Fiber Distribution Frame
POT BAY	Point of Termination Bay

Note: The arrangement shown above is applicable to Physical Collocation. Current polices concerning recombination of elements will be adhered to.

Figure 2 – Unbundled Dark Fiber BST Central Office to BST Central Office

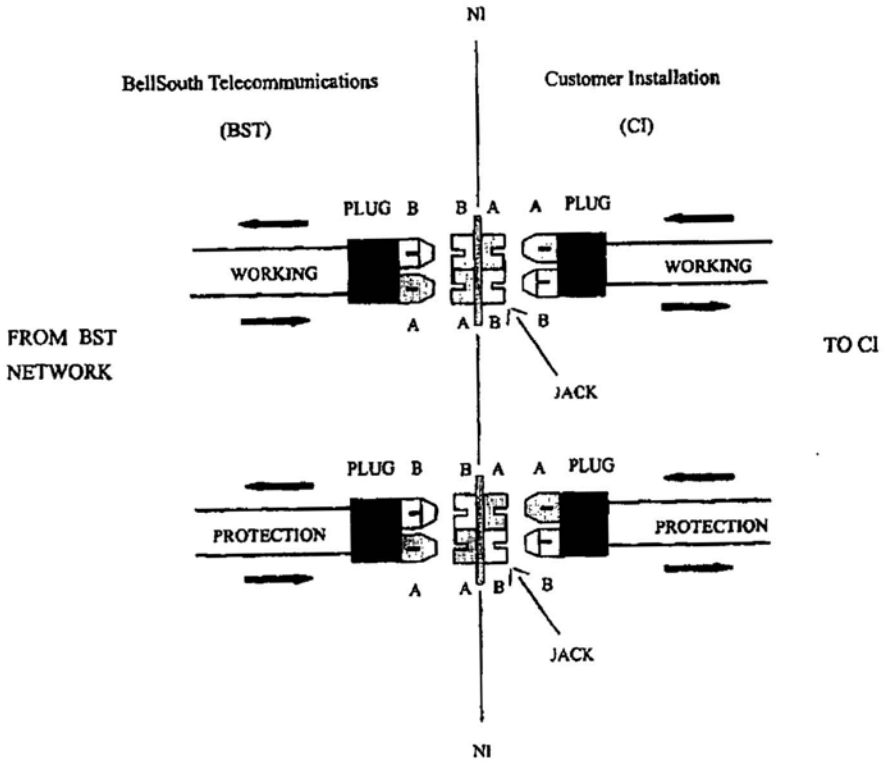

NOTES:

1 LIGHT LEAVES "A" PLUG AND ENTERS "A" JACK

2 LIGHT LEAVES "B" JACK AND ENTERS "B" PLUG

3 JACK AT NI PROVIDED BY BST (OPTIONALLY MAY BE PART OF OTHER NETWORK EQUIPMENT)

4 A SINGLE FIBER IS USED FOR EACH DIRECTION OR TRANSMISSION

5 FOR 4 FIBER INTERFCE BOTH WORKING AND PROTECTION PROVIDED

DIRECTION OF LIGHT

Figure 3 – 4 Fiber Optic Mechanical Network Interface

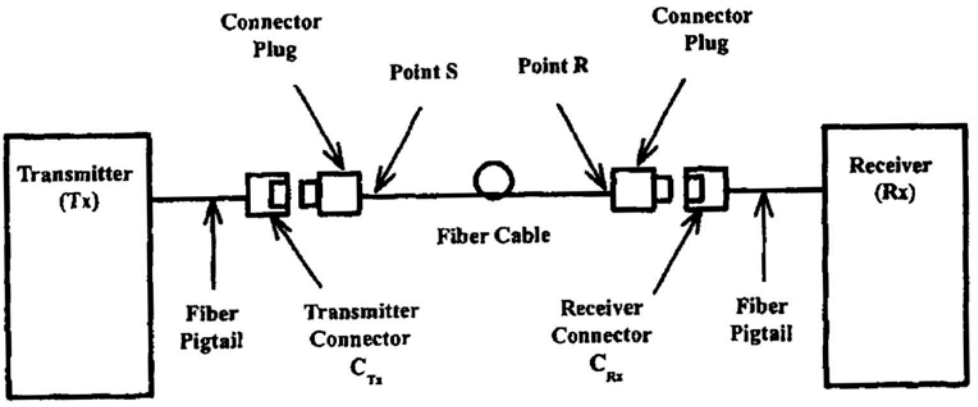

Figure 4 – Optical System Interfaces (Points S and R)

PLEASE HELP US

Please take a minute to provide us with feedback about this Technical Reference by completing the questions below. BellSouth is interested in receiving comments and suggestions to improve the quality of our publications. We will reply to your feedback individually, and appreciate your taking time to complete this form.

Technical Reference TR 73603

Why did you order this document (please check appropriate box)?

General Reference _____

Product Development _____

Service Development _____

Other (please explain) _____

Did this document provide the technical information you needed? Yes ____ No ____

Was the information presented logically and clearly? Yes ____ No ____

How could this document be improved? _____

_____

_____

_____

_____

Your name: _____

Position: _____

Company: _____

Address: _____

_____

_____

NO POSTAGE
NECESSARY
IF MAILED
IN THE
UNITED STATES

BUSINESS REPLY MAIL

FIRST-CLASS MAIL PERMIT NO. 83 BIRMINGHAM, AL

Postage will be paid by addressee:

DIRECTOR - TRANSPORT SYSTEMS ENG.
BELLSOUTH TELECOMMUNICATIONS, INC.
1884 DATA DRIVE
BIRMINGHAM, AL 35244

FOLD HERE