August 30, 2007

Ms. Marlene H. Dortch
Secretary
Federal Communications Commission
445 12th Street, SW, Room TWB-204
Washington, DC 20554

Re: Notice of Ex Parte Communication: *Qwest, AT&T and BellSouth Petitions for Forbearance*, WC Dkt. No. 06-125; *Embarq and Frontier Petitions for Forbearance*, WC Dkt. No. 06-147; and *Special Access Rates for Price Cap Local Exchange Carriers*, WC Dkt. No. 05-25

Dear Ms. Dortch:

Yesterday, Kathleen O'Brien Ham, Amy Wolverton, and I from T-Mobile USA, Inc. ("T-Mobile") met with Ian Dillner of Chairman Martin's office to discuss issues arising in the above-referenced proceedings.

With respect to the forbearance proceedings, T-Mobile urged the Commission to deny the "me-too" forbearance requests of Qwest, AT&T, BellSouth, Embarq and Frontier for the reasons set forth in the attached presentation. The services at issue in these proceedings are special access services that are critical inputs for T-Mobile's broadband services, in particular, its UMTS deployment. T-Mobile noted that the recent ACS forbearance grant is an inappropriate template for granting forbearance relief in these proceedings, which the Commission should require to be re-filed on a market-specific basis.

T-Mobile also discussed its position in the special access rulemaking. Because special access services are such critical inputs for wireless carriers (see Attachment A showing how T-Mobile uses special access links in its CMRS network), and because industry consolidation and forbearance relief have magnified the significant problems of the special access marketplace, the Commission should reform both its pricing flexibility rules and its price cap rules as set forth in the attached presentation.

One electronic copy of this ex parte notice is being submitted to the Secretary of the FCC in accordance with Section 1.1206 of the Commission's rules.

Sincerely,

/s/ Thomas J. Sugrue
Thomas J. Sugrue
Vice President Government Affairs

T-Mobile USA, Inc.
401 9th Street, NW Suite 550
Washington, DC 20004

Attachments

cc: Ian Dillner

T-Mobile USA, Inc.
401 9th Street, NW Suite 550
Washington, DC 20004

ILEC Forbearance Petitions & Special Access

August 29, 2007

T-Mobile

Deny "Me-Too" Forbearance Requests

- **The Commission should deny the "me-too" forbearance requests of Qwest, AT&T, BellSouth, Embarq, and Frontier.**
  - Requests seek relief similar to that granted to Verizon by operation of law in March 2006--now subject to court challenge.
  - ILECs fail to meet the statutory requirements for forbearance.
    - Record continues to show prices higher in pricing flexibility areas than in price cap areas.
    - ILECs mandate onerous exclusionary terms for discount contracts.
    - Consumers and public interest lose as broadband growth is stifled.
  - ACS forbearance grant is the wrong template.
    - Relief must be market specific. Petitions here did not include data for a market-specific analysis, particularly with respect to enterprise broadband services.
    - Relief depended on continued tariffing of other special access services; here, ILECs have pricing flexibility in most major MSAs.

Packet-Switched Broadband And Ethernet Are Critical Special Access Services

- **To the extent the petitioners receive any relief, the FCC should clarify that special access services are not part of any forbearance grant.**
- **Special access services are critical inputs that link thousands of cell sites throughout the U.S. to mobile switching centers.**
- **The relief requested would apply to packet-switched broadband and Ethernet services—used today for special access services and will be even more so in the future as 3G and 4G networks are deployed.**
  - T-Mobile already purchases these services from the petitioning ILECs out of their access tariffs.

Need For Reform Is Even More Urgent Than In 2005

- **In lieu of granting forbearance petitions, the Commission should strengthen its oversight of special access services.**
  - Ruling on the forbearance requests when special access rulemaking incomplete would be premature.

- **The 2006 GAO report concluded that prices for special access are supra-competitive.**

- **In refreshing the record, two major trends emerge:**
  - The industry is consolidating, decreasing the already-limited competition in the provision of special access.
  - ILECs are using forbearance petitions to decrease their existing regulatory obligations for special access services.

Reforming Special Access

The Commission should reform the pricing flexibility rules:

- Adopt more granular definitions of the areas to which pricing flexibility applies (e.g., wire-center approach, not MSA).
- Define separate categories of special access (e.g., channel terminations, channel mileage) to apply the triggers.
- Adopt stricter triggers based on the *Triennial Review Remand Order* for loops and transport (based on business lines and fiber-based collocators, not revenues).

Reforming Special Access

The Commission should reform the special access price cap rules:

- **Immediately impose an interim 5.3% X-factor (as proposed by the Commission in 2005) and adopt a new productivity factor based on the efficiencies that the ILECs often claim for their operations.**
  - As an additional interim step, the Commission should extend the special access merger conditions as interim nationwide rules until reform is complete.
- **Create separate service categories for special access services (e.g., channel mileage and channel terminations versus other services) to prevent price manipulation.**
- **Reinitialize rates based on forward-looking economic costs.**

Thank you

T · ·Mobile·®

stick together℠

ATTACHMENT A

Schematic View of CMRS Network

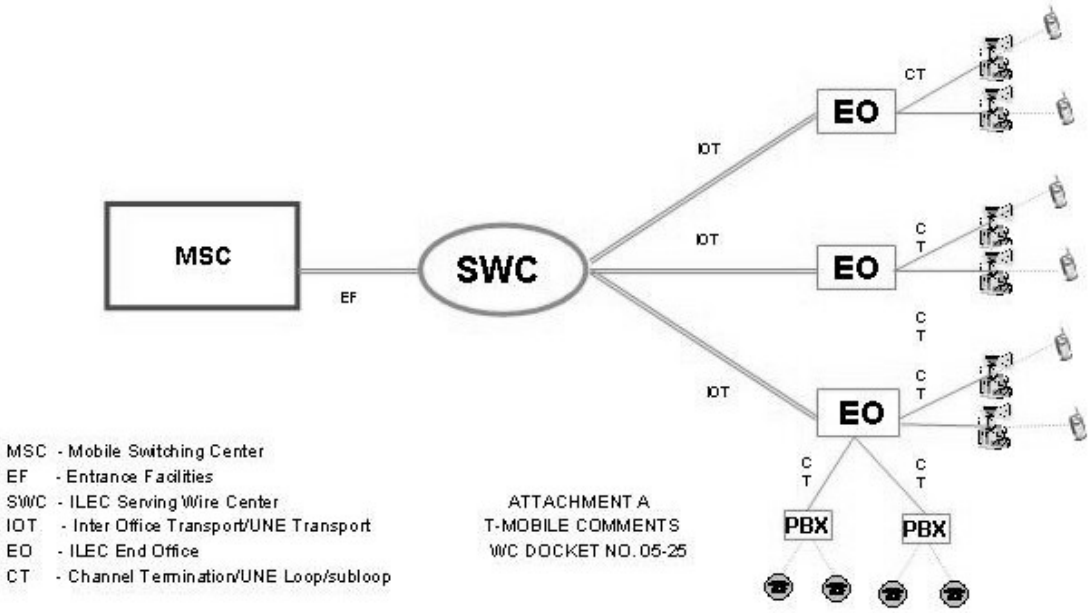

MSC - Mobile Switching Center
EF - Entrance Facilities
SWC - ILEC Serving Wire Center
IOT - Inter Office Transport/UNE Transport
EO - ILEC End Office
CT - Channel Termination/UNE Loop/subloop

ATTACHMENT A
T-MOBILE COMMENTS
WC DOCKET NO. 05-25