Before the
FEDERAL COMUNICATIONS COMMISSION
Washington, DC 20554

In the Matter of	)	
Unlicensed Operations in the TV Broadcast Bands	)	ET Docket No. 04-186
	)	
Additional Spectrum for Unlicensed Devices Below 900 MHz and In the 3 GHz Band	)	ET Docket No. 02-380

To: Office of Engineering and Technology

REPLY COMMENTS OF

NEW AMERICA FOUNDATION
MEDIA ACCESS PROJECT
CUWIN FOUNDATION
MICHAEL MARCUS, Sc.D., F-IEEE
Dr. PAUL KOLODZY
Dr. JOSEPH EVANS

NAF, et al. again applauds the FCC Office of Engineering and Technology (OET) for the recent technical studies on initial measurements of prototype TV white space devices (WSD). NAF, et al. believe that the *feasibility* of personal/portable WSDs to both detect-and-avoid occupied channels and to transmit on unoccupied first adjacent channels without causing harmful interference with licensed services has been clearly demonstrated both by the recent OET report,[1] in other studies,[2] and in deployments in other bands.[3] The remaining challenge for OET and the Commission is to define the explicit operating parameters that will govern device certification, so that a broader array of industry players can embark on the R&D necessary to refine personal/portable devices to meet those standards. We look forward to continuing to assist the Commission in developing WSD rules that will foster a new age in consumer applications and wireless technologies.

In these comments we respond to certain claims of incumbent interests opposed to opening the band's unused capacity for unlicensed access and clarify several important facets of the current WSD discussion, including issues related to: (1) adjacent channel interference parameters and a proposal for use of adjacent channel leakage ratios (as exemplified by the 3G industry); (2) efforts to select appropriate protection levels for out of band emissions, particularly with respect to the distance between devices: (3) wireless microphone sensing feasibility and a proposal for a protected transition for microphone licensees; and (4) MST/NAB measurement artifacts and inconsistencies, particularly as it relates to assumptions concerning detection thresholds based on building propagation loss.

With regard to the overall TV Whitespace Proceeding, the OET has sought to address two essential but separate questions: first, what operational parameters provide sufficient protection to licensed services from harmful interference; and second, whether the technology for WSDs to meet those parameters is technically feasible. It is important to bear in mind that "sufficient protection" from harmful interference is not a simple technical matter but a complex question of weighing potential benefits, risks and user expectations. For example, while broadcasters would set standards sensitive enough to protect every out of market signal – however distant – from the risk of intermittent interference, to do so would create such enormous costs and so limit the availability of the spectrum as to render such rules effectively unworkable.

---

[1] See Initial Evaluation of the Performance of Prototype TV-Band White Space Devices, FCC/OET 07-TR-1006, (July 31, 2007) ("OET Report").

[2] See, e.g., Apurva Mody, BAE Sytems, "Spectrum Sensing of the DTV in the Vicinity of the Pilot Using Higher order Statistics," submitted to IEEE P802.22 Wireless RANs, August 15, 2007 (IEEE 802.22-07/0370r12); "Final Results of University of Kansas TV White Space Interference Study," filed as an attachment to Comments of New America Foundation, ET Docket 04-186, Jan. 31, 2007, available at http://www.newamerica.net/files/NAF%20Spectrum%20Technical%20Report%20_FINALSUBMITTED_0.pdf. See also NAF Issue Brief #19, "Why Unlicensed Use of Vacant TV Spectrum Will Not Cause Interference with Television Reception, July 2006 at p. 4, available at: *http://www.newamerica.net/files/IssueBrief19.UnlicensedTVBand.MarcusKolodzyLippman.Final.pdf*

[3] The technical feasibility for detecting and avoiding licensed transmissions in other bands – using listen-before-talk protocols and dynamic frequency selection – is well-established. For example, the U.S. military has accepted the feasibility of carrier-sensing and interference mitigation technologies that permit unlicensed sharing of the 5 GHz UNII band with military radar, and is also developing its own more sophisticated version of this technology through the DARPA XG project.

OET found that the Philips device (Prototype "B") was 100 percent reliable in lab testing for detection of DTV signals at -114 dBm.[4] However, a policy that required detection of a signal that is roughly 1,000 times weaker than what a DTV tuner requires to display a picture represents an unacceptable opportunity loss in terms of spectrum efficiency and a concomitant loss of benefits from broadband and wireless innovation for all Americans. As we show below, the credible empirical studies of which we are aware provide no basis for precluding low-power WSD use of a channel where DTV signals are detected at thresholds as weak as -114 dBm. At all times, OET must recall that the relevant test for harmful interference is user expectation. Because receivers of such weak signals via over the air transmission are accustomed to intermittent interference from routine atmospheric conditions, or from operation of home computers or other consumer devices certified pursuant to Section 302a, an increase in the risk of interference from mobile and very low-power WSDs is not "harmful interference" within the meaning of the Communications Act or past Commission precedent.

In the real world, there is never zero "interference" between systems and services operating in spectral or physical proximity – which is why "harmful interference" is the statutory qualifier that routinely requires the Commission to balance competing considerations and probabilities in the public interest.

1. ADJACENT CHANNEL EMISSION LIMITS

An unresolved issue in this proceeding is how to set adjacent channel emission limits to protect TV receivers tuned to a channel next to a vacant channel. Opponents of unlicensed devices in these bands seek to prohibit the use of first adjacent channels or to set limits to make WSD use impractical, if not impossible. Such an outcome would continue to leave most of the TV white space fallow and to undermine potential economies of scale for personal/portable devices by excluding coastal metropolitan areas, thereby crippling the practical, affordable use of WSDs for broadband even in small town and rural areas. We will show below that it is possible to empirically set limits that both protect adjacent channel receivers and give WSD designers adequate flexibility to meet consumer demands and provide new services to the general public in presently underutilized spectrum.

Opponents of opening access to the white space ignore the fact that, as OET has noted, it tested only one prototype with transmit capability (prototype "A"), a prototype that was limited with respect to possible interference mitigation features.[5] Protection of adjacent channels can be increased by a combination of keeping the WSD signal away from the channel edge and filtering it so that it decreases more rapidly near the channel edge. The WSD can also employ total power

[4] See OET Report at Section 6.1.2, p. 25. Similarly, OET verified that the "Prototype B" device reliably detects wireless microphones down to the -120 dBm level, far exceeding the target detection of -114 dBm proposed by Philips, which we agree is sufficiently protective. *See id.* at Section 7.2, p. 26, and Reply Comments of Philips Electronics N.A. Corp., Aug. 27, 2007 at pp. 4-5..

[5] See OET Report at p. x: "Certain techniques that are claimed to reduce interference potential, such as adaptive power control and reducing the transmitter power based on measurements of DTV signal levels in adjacent channels, were not implemented in the prototype device."

control (TPC) which regulates transmit power based on the proximity and power of licensed transmissions.

The ability of WSD to combine these features – and future improvements – means that there are multiple techniques and tradeoffs that WSD manufacturers can employ to avoid harmful adjacent channel interference. The ATSC A/74 standard that the FCC adopted for digital television transmission includes a protection standard for adjacent channels. A/74 bases its standard on the assumption that the desired channel has a weak but usable signal typical at the Grade B contour. The desired signal necessary to display a DTV transmission is assumed to be -68 dBm, measured over a bandwidth of 5.38 MHz. Under this condition, an A/74 compliant receiver should be able to tolerate a -35 dBm undesired DTV signal centered in the adjacent channel – a signal that is 33 dB (-35 - (-68)) stronger. If the adjacent WSD signal is offset away from the desired channel or is either filtered or designed so that it rolls off more rapidly near the boundary with the desired signal, then a stronger adjacent channel WSD signal can be tolerated without interference to a TV receiver that is using over-the-air reception at that time.

In traditional FCC emission regulation, information on adjacent channel rejection such as above would be used to develop a specific mask for emissions that would be required of all units for equipment authorization. However, such regulation also prevents equipment designers from making tradeoffs that provide functionally equivalent or greater protection while providing a more useful WSD service. Fortunately, technological advances allow the Commission to implement an approach that will facilitate innovation and protect TV band devices.

The complexity of wideband data waveforms throughout the CMRS, PCS, and eventually the AWS service bands has required the communications industry to develop sophisticated tools to address potential interference in adjacent channels. As technologies have evolved and improved, new metrics such as the **adjacent channel leakage ratio** (ACLR) have been developed in order to address both the transmitter AND receiver characteristics. While such metrics have not been used for broadcast spectrum regulation to date, we believe that basing WSD emission limits on an approach that is current practice in CMRS offers a better method that preserves flexibility for device manufacturers as well as excellent protection for adjacent channel TV reception.

The issue of out-of-band emission (OOBE) standards for WSD transmitters becomes much more nuanced if performance is specified in terms of ACLR with respect to a DTV signal at a set value (e.g. threshold of visibility, -85 dBm or at the ATSC defined weak signal level, -68 dBm). ACLR measures how much of an adjacent channel signal actually reaches the victim receiver's circuitry after the frequency selectivity of the front end (the electronics closest to the antenna input).

This is shown in Figure 1 below where both the WSD emission envelope is shown as well as the frequency response or selectivity of a TV receiver. The amount passing through the front end is shown in the dashed line which is simply the product of the other curves. The total power reaching the processing circuitry is the area under the dashed curve (i.e., the shaded area).

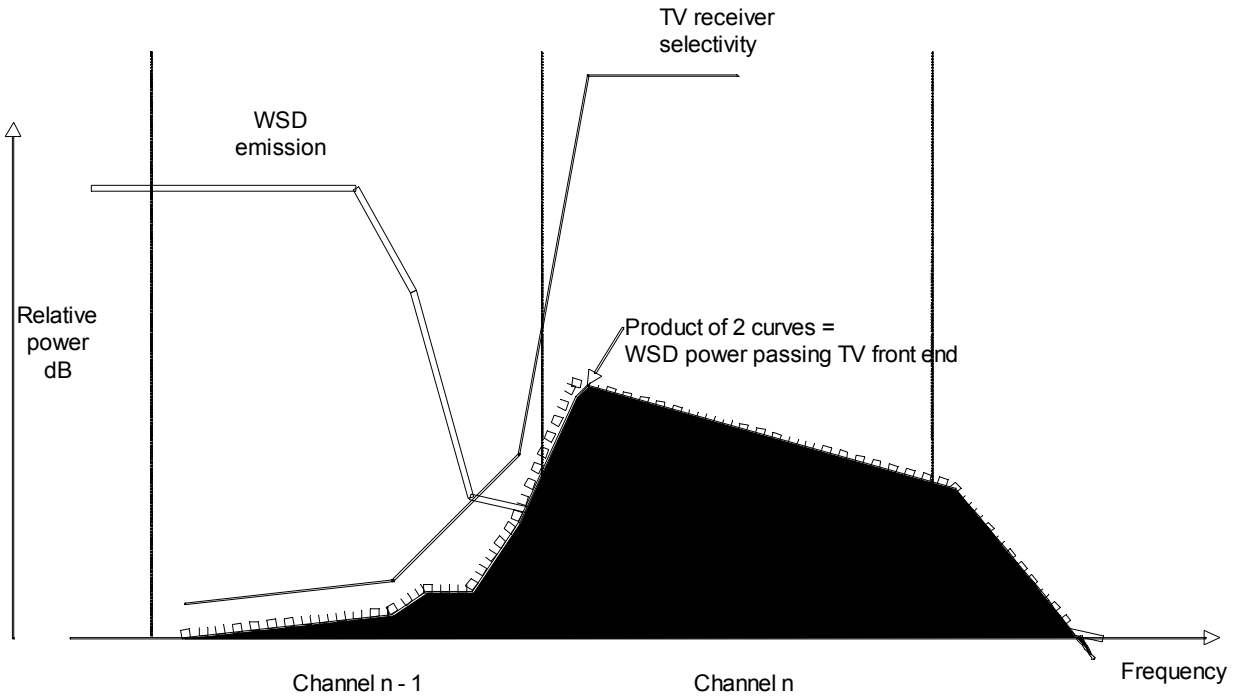

Figure 1: Measuring WSD interference to TV receiver

ACLR-based standards were unexplored in the past due to the complexity of measuring instruments involved. Twenty years ago such measurements were very time consuming and costly. However, more modern spectrum analyzers – common to laboratories – can make such measurements quickly and efficiently.

An ACLR-like specification[6] would be based on the maximum spectrum of a given WSD transmitter design weighted by the front end response of minimal-quality receivers that meet some minimum performance test such as ATSC A/74. FCC/OET 07-TR-1003, "Interference Rejection Thresholds of Consumer Digital Television Receivers Available in 2005 and 2006", contains some measurements of this nature, though only for one receiver. Using this approach, a WSD transmitter with sharp OOBE rolloffs could effectively be close to an occupied TV channel and give better performance than a WSD transmitter with more gradual rolloffs. In both cases TV receivers would be protected.

Using ACLR-like specification will provide a better empirical measure of OOBE, one more in line with today's technological capabilities and thus facilitate more efficient use of electromagnetic spectrum. With such an approach, the Commission can adopt an emission mask for WSD technology that provides both protection for the broadcast community and flexibility to

[6] Rohde and Schwarz, 3GPP W-CDMA ACLR Measurement. http://www.rohde-schwarz.com/www/downcent.nsf/ANFileByANNoForInternet/578510B4F1DB2969C1256B280045855A/$file/1EF41_0E.pdf ; 3GPP TSGR#3(99) 231, April 1999, http://www.3gpp.org/ftp/tsg_ran/TSG_RAN/TSGR_03/Docs/Pdfs/RP-99231.pdf

WSD designers who wish to innovate new hardware that balances signal design, signal filtering, and how much of an adjacent channel is used.

Example Emissions in Adjacent Channels

The examples in Figures 2 and 3 demonstrate that adjacent channels can be used with the appropriate rules. Figure 2 depicts an experiment performed in Lawrence, Kansas,[7] in which two adjacent channels can be received (note that rooftop amplification was used because of the location of the receiver). KTWU broadcasts from Topeka, Kansas on channel 23 (524-530 MHz), and KCTV broadcasts from Kansas City, Missouri on channel 24 (530-536 MHz). Both channels can be successfully viewed on an typical consumer LCD DTV.

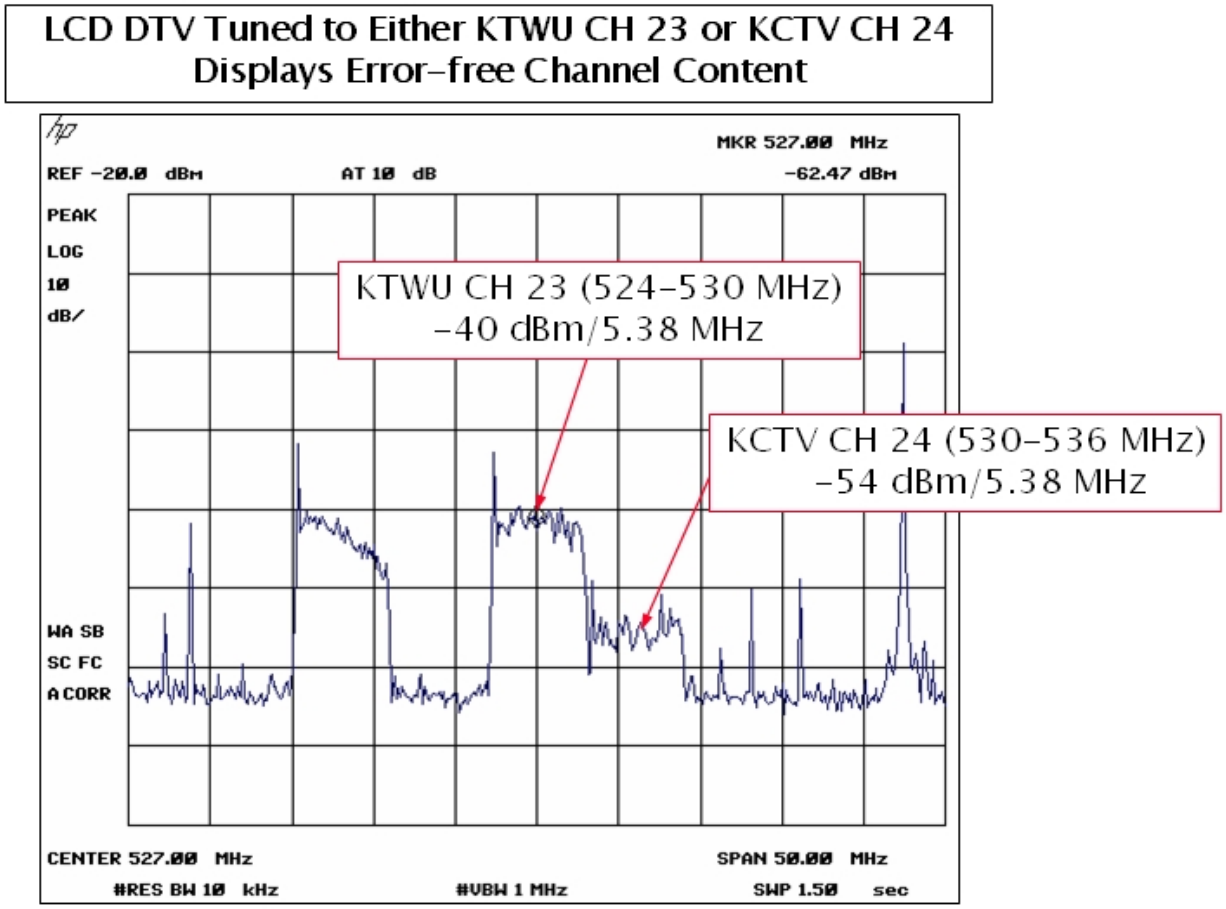

Figure 2: Example of Adjacent Channel Use in Northeast Kansas Region

[7] The measurements described below were performed at the University of Kansas Information and Telecommunications Technology Center in Lawrence, Kansas, as part of a continuing study of broadcast emissions and electromagnetic interference. Earlier findings have been filed in this docket (see DePardo, Evans, Kolodzy, Marcus, et al., "Quantifying the Impact of Unlicensed Devices on Digital TV Receivers," Technical Report ITTC-FY2007, University of Kansas, attached to comments filed by the New America Foundation, January 31, 2007).

This experiment illustrates that there have already been DTV assignments resulting in successful, non-collocated adjacent channel use, and suggests that adjacent channels might be used for other applications.

Figure 3 depicts another experiment that builds upon the previous one. In this case, an exemplar 6 MHz OFDM "White Space Device" signal is transmitting in one of the channels (518-524 MHz) adjacent to the DTV signals. Both channels can still be successfully viewed.

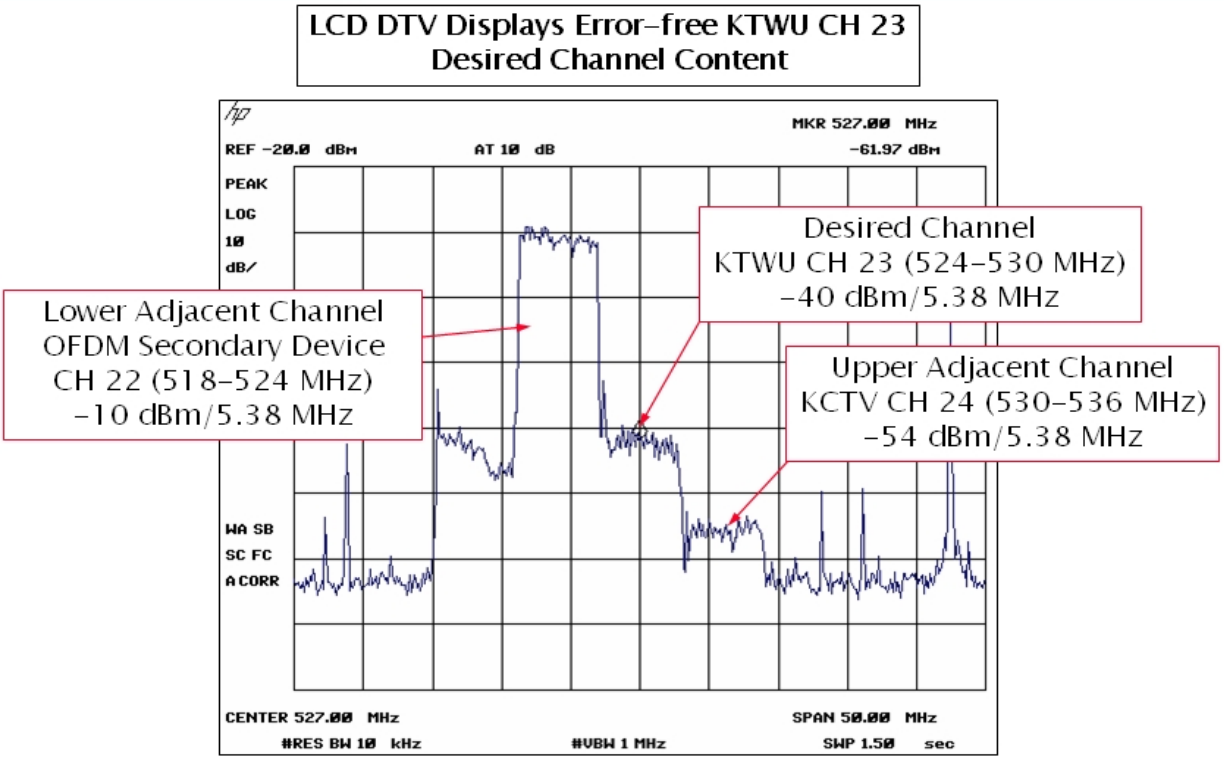

Figure 3 Example of Adjacent Channel Use with White Space Transmitter

This experiment, although anecdotal, clearly illustrates that an unlicensed device can fit in a white space without interfering with the adjacent channels. The TOV for the experiment was -5 dBm (although the WSD reception at the DTV is shown at -10 dBm in the figure). For comparison, a typical consumer 802.11 PCMCIA card might transmit at approximately 15 dBm. If a future WSD transmits at a similar level, the free space loss needed to avoid interference (with no antenna gain, etc.) would be 20 dB, which translates to approximately 0.5 meters. The DTV signal levels at the receiver are, respectively, between the A/74 moderate and strong designations and just below A/74 moderate in this case, and a lower DTV signal level would of course require larger distances. This experiment demonstrates, however, that WSD transmission rules that protect over-the-air TV are feasible.

2. SELECTION OF APPROPRIATE DISTANCE PROTECTION LEVELS

The OET Report found that whereas *unfiltered* WSD transmissions could cause first adjacent-channel interference at distances up to 87 meters, "[f]irst adjacent-channel interference with the external transmit filter applied was observed at a maximum distance of 2 meters …."[8] The Report goes on to note that because the filter attenuated the signal by an additional 14 dB, in practice the distance would be somewhat greater than 2 meters "if the device were operating at the proposed output power level of 100 mW EIRP."[9] While opponents of WSD access to TV band white space seem to suggest that interference at *any* distance is cause for alarm, it is well-established that the Commission has never required protection distances that apply to devices largely under the consumer's control. Indeed, if it did not, then the Commission would not certify a wide range of consumer devices, from personal computers to microwave ovens and even television sets, which all produce radio frequency emissions that would interfere with licensed services on other bands if they were operated in very close proximity.

Commission precedent clearly distinguishes between emission rules for unintended emissions (which do not provide intrinsic information value to the consumer) and intentional emissions that provide high value to the consumer. Protection levels for licensed services must explicitly reflect these differences and balance the inherent tension between spectrum access and interference protection. Since the adoption of the present digital device/personal computer emission rules in 1979, Commission policy has ***not*** protected TV reception from all unlicensed emissions. Rather, time and again, the Commission has balanced the costs and the benefits of emission limitations. The Docket 20780 R&O (79 F.C.C.2d 28) agreed only to protect TV receivers less than 10 meters away from the incidental radiation digital device/PC:

> The technical rationale for these limits is given in Appendix C, attached. It uses the same approach as that used by CBEMA in its Report. However, instead of using a separation distance of 30 meters, we are assuming that the home computing device is at least 10 meters from the receiver. The separation distance is a basic parameter in computing tolerable levels of signal that may be radiated by a computer. We are most interested in protecting an individual who is receiving interference from his neighbor's computer. To a lesser extent, we are concerned about devices in the same household. In a household, the homeowner or apartment dweller can choose which device he wants to operate. (R&O Docket 20780, para. 53-54)

The Commission noted that this decision was based on the explicit finding that the emissions involved were noise-like and had no communication value unto themselves:

> We believe that in most cases interfering radiation from computing devices is a less valuable use of spectrum than the radio and television services that would be

[8] OET Report, Executive Summary, at p. x.

[9] *Ibid.*

> interfered with. Therefore, we consider it appropriate that our regulations deny to computing devices an interfering use of the spectrum (except where the interference is to other equipment of the computer owner). We have made this judgment by comparing the benefits of allowing current uses of spectrum to continue without interference from computing equipment with the costs of denying interfering use of the spectrum to computers. (R&O, para. 67)

The white space devices under consideration in this proceeding are communications systems, not incidental noise generators, and convey real information value to their users. Indeed, WSDs are likely to be used by and benefit a far higher percentage of the population than the dwindling fraction of Americans who receive their primary television service over the air (less than 15 percent and falling). Moreover, as the Commission observed in R&O Docket 20780, within the same household, or between common wall apartments, consumers can readily identify the problem and take self-help, moving the devices a few more meters away from each other (which, with a personal/portable device, would likely be a fleeting issue in any event). Thus, the Commission should explicitly consider whether the standard 10 meter protection distance that was the basis of the Docket 20780 decision and the present 15.209 is still appropriate, or whether it should increase this distance somewhat in consideration of the great communication and economic value of personal/portable WSDs. The white noise from PCs contains no inherent value to consumers and interference rules reflect this fact; however, WSD signals provide useful communications services and the Commission should take these benefits into account when formulating its emissions rules for these devices.

3. WIRELESS MICROPHONE ISSUES

The existence of wireless microphones (both licensed and illegal) in TV bands is well-established. The technical question of whether it is feasible to protect these devices and the policy question as to the level of that protection are what are currently under debate. As we discuss below, FCC testing has already demonstrated the feasibility of detecting wireless microphones. Thus the more important issue is that there are many policy solutions that address the rights of the legal users of wireless microphones as well as many other solutions to providing wireless microphone applications to the consumer and entertainment industry.

As an initial matter, the Commission made an initial determination that WSDs would not interfere with wireless microphones. No one has submitted engineering evidence that refutes this initial finding. Thus, the sensitivity of WSDs to wireless microphones is at best undue caution and at worst a red herring. Second, and more critically, "pirate" wireless microphones deserve no more protection from interference than full power pirate radio broadcasters.[10] It is startling that NAB, which has tirelessly advocated against the unauthorized use of radio frequencies,

[10] For example, the American Arts Alliance justifies requiring sensitivity to all wireless microphones on the grounds that these are critical in the performance of theater productions such as assisting with arrangement of "performance and lighting cues, staging directions, and other vital directions." *See*, Comments of American Arts Alliance (filed July 30, 2007). Such use for non-broadcast stage performances falls outside the uses for this licensed service authorized by the Commission.

should argue that the Commission must mandate protection standards to avoid interference with unauthorized BAS transmitters.[11] It would be even more ironic if NAB and its allies were successful in establishing a Commission precedent that unauthorized users of broadcast frequencies are entitled to interference protection against authorized users.

With regard to the protection of *legal* BAS transmitters, however, NAF, *et al.*, have already proposed a far less draconian solution than that proposed by NAB, Shure, and others. The Commission can create a limited exception to the OTARD rules, permitting operators of broadcasting studios, sporting arenas, and other places where legally operated BAS transmitters require protection to exclude WSDs from their premises. This will protect legal BAS operations, without imposing any undue burden on authorized WSD users. Nor would it fly in the face of Commission precedent by requiring users authorized by Commission rules to protect uses that explicitly violate Commission rules.

In May 2004, the Commission's 04-133 NPRM provided a technical response to the engineering analysis submitted on the issue of wireless microphones:

> ...manufacturers of wireless microphones express concern that operation of new unlicensed devices in the TV bands could cause interference to wireless microphones. We believe that the operational characteristics of wireless microphones significantly reduce the likelihood of interference from unlicensed devices for several reasons. Wireless microphones are permitted relatively high output power given the range over which they are typically operate. The maximum permitted output power of these devices is 50 milliwatts in the VHF band and 250 milliwatts in the UHF band. Wireless microphones are used in locations such as theaters and sports arenas where the operating range would typically be hundreds of feet at the most, so operation at the power levels permitted in the rules results in a significant signal level at the wireless microphone receiver. Further, the vast majority of wireless microphones are frequency modulated (FM). FM receivers exhibit a "capture effect" in which they respond to only the strongest signal received on a frequency and reject any weaker interfering signals. Because the desired signal at a wireless microphone receiver is relatively strong, we believe that the likelihood of interference from unlicensed device signals is therefore low such that unlicensed use should generally be compatible with wireless microphones. Nonetheless, we seek comment on whether other measures are needed to protect wireless microphone operation including the possibility of designating one or two unused TV channels in each market for use by only wireless microphones. (NPRM, para. 38)

[11] One positive outcome from this however, is to draw attention to the very serious problem of enforcement of the BAS license rules. The Commission may well wish to begin a more general investigation, based on the evidence in this docket, of flagrant violation of the Commission's rules.

Technical Sensing Feasibility

The FCC Laboratory report shows that the detection capability of Prototype B for wireless microphones is very promising. Prototype B did better for frequencies in the center of a channel, rather than near the edge, a finding which is typical of first-generation prototype designs. However, the FCC's goal is to set performance standards for WSDs prior to allowing for retail sale of units that meet these criteria. We support this process as it is indicative of responsible spectrum management. Since current testing demonstrated the feasibility of this technology, the next logical step is to identify and draft performance parameters providing an appropriate level of protection.

Protection Allowances and Alternatives

Wireless microphones offer a valuable service and should be provided for now and in the future. However, we reiterate our previous statements that the goal of the wireless microphone community to preserve TV whitespace as an *exclusive* preserve for wireless microphones and related products is anachronistic and wasteful. The wireless microphone lobby opposes both unlicensed and licensed access to the vast wasteland of TV band white space; indeed, Shure Inc. opposes *licensed* access perhaps more strenuously since the vast majority of its microphone systems are sold illegally to consumers who are quite obviously ineligible to operate in the band under current FCC rules (and who yet appear to be able to operate on an unlicensed and uncoordinated basis, at low power, without complaint from other incumbent licensees).

When the present Part 74, Subpart H provisions were adopted for wireless microphones decades ago, there was significantly less demand for spectrum than there is today. In previous decades, the UHF band was an "exotic" high frequency – much as millimeter-wave bands are viewed today. **A lot has changed!** The legal eligibility for wireless microphone use has been broadened greatly over the years to include multiple different constituencies.[12] While the local broadcasters included in §74.832(a) can be reasonably expected to know these rules and perform the necessary coordination to prevent interference to each other and to TV reception,[13] most of the legally-allowed users enumerated in the Rules can not be expected to have personal contacts with

[12] Since many wireless microphone users appear unaware of the eligible organizations, we quote 74.832(a) here:

74.832 Licensing requirements and procedures.

(a) A license authorizing operation of one or more low power auxiliary stations will be issued only to the following:

(1) A licensee of an AM, FM, TV, or International broadcast station or low power TV station. Low power auxiliary stations will be licensed for use with a specific broadcast or low power TV station or combination of stations licensed to the same licensee within the same community.

(2) A broadcast network entity.

(3) A cable television system operator who operates a cable system that produces program material for origination or access cablecasting, as defined in Sec. 76.5(r).

(4) Motion picture producers as defined in Sec. 74.801.

(5) Television program producers as defined in Sec. 74.801.

(6) Licensees and conditional licensees of stations in the Service and Multichannel Multipoint Distribution Service as defined in Sec. 21.2 of this chapter, or entities that hold an executed lease agreement with an MDS or MMDS licensee or conditional licensee or with an Instructional Television Fixed Service licensee or permittee.

[13] See §74.803

local broadcasters. We also know that the actual users of wireless microphones is much broader than just those entities legally allowed by §74.832(a). Indeed, there are repeated references that the non-eligibles are the overwhelming majority of the users even though they are eligible for similar devices licensed under Part 90 in different bands.[14]

The August 15, 2007 MIC filing contains the flowing statement:

> Wireless microphones also give artists and performers freedom of movement, enabling innovative and even acrobatic productions such as Cirque du Soleil that could not possibly be performed with wired products.... Wireless microphones are essential for numerous productions and events that define American culture. For example, MIC's members include all of the major audio providers for all Broadway productions, which are all heavily dependent on wireless microphones.

We do not dispute the veracity of this statement but would like to point out that neither Cirque du Soleil nor "Broadway productions" are among the enumerated classes in §74.832(a) and are presumably ineligible for the Society of Broadcast Engineers' frequency coordination process[15] that is the day-to-day implementation of §74.803 frequency selection. If Stanfill's data are correct, the Commission's Enforcement Bureau might wish to examine this widespread illegal use of the UHF-TV frequencies by wireless microphones, especially since MIC has publicly identified Cirque du Soleil and other members as apparent criminal violators of 47 USC 301.

4. MST/NAB MEASUREMENT ARTIFACTS

MST and NAB submitted comments that included a MST report with a new set of measurements by Meintel, Sgrignoli and Wallace (MS&W) that purports to show that in and near residences there are locations with DTV signal strength less than -114 dBm even though the DTV signals are viewable nearby. Such an allegation, if it were true, would show that WSD sensitivities around -114 dBm would be inadequate to protect DTV reception in some of the decreasing number of homes that use over-the-air reception.

We applaud the inclusion of additional data to better understand the RF environment of these field tests. However, we will show below that the present MS&W measurements may be highly unreliable due to numerous issues with the way that the measurements were taken and systematic methodological errors. Moreover, an engineering study of the feasibility of sensing, published by the New America Foundation and attached to comments filed in this docket last January, summarize a number of studies that found a maximum building penetration loss of 17.8 dBm in a residence, and an overall maximum building penetration loss of 21.1 dBm from inside a

[14] A recent Internet posting by a wireless microphone group stated, "And although a lot of people ignore the fact, wireless audio systems actually require a license and are really only supposed to be operated — in the TV band — by broadcasters and media producers.... But according to Stanfill, only about 10 to 15 percent of the systems in use in the United States are properly licensed." http://mixonline.com/mag/audio_hear_2/index.html

[15] See http://freq.sbe.org/

shopping mall (the mall measurements ranged from 12.0 to 21.1 dBm).[16] The greatest building penetration loss in available European studies was 28 to 30 dBm, measured in a separate study in the UHF band on the ground floor at the BBC. Since the ATSC A/74 standard for DTV assumes a desired signal strength of -68 dBm is required to display a picture, these studies – done in Europe and without a commercial self-interest in influencing this proceeding – suggest that the spectrum efficient detection threshold could be considerably above the conservative -114 dBm threshold proposed by Microsoft, Philips and their White Space Coalition.

Estimating Signal Strength

The first question that we have is with the methodology used in the MS&W report for estimating signal strength. Engineers understand the criticality of the measurement methodology and its impact to all conclusions that can be made. For the measurements presented in the report, a high gain antenna was used instead of an amplifier to produce signals strong enough for the equipment to measure.

Correction Factor Problem**:** The MS&W report uses an engineering correction to convert from the measurements with the high gain antenna to that seen by either a DTV antenna, if mounted at 10 meters, and a WSD at a 2 meter height. They accurately correct for the differences in antenna gain with an assumed DTV at 10 dBi (versus the measurement antenna gain of 16 dBi) and a WSD at 0 dBi. However, they use a correction for the height of the antenna that is much less clear. The report uses a correction factor of 7 dB with is equal to the ratio of 10 meters to 2 meter heights. If this is the rationale, then it is incorrect and many of the results need to be corrected by 7 dB to be valid.

High Gain Antennas in Indoor Environments Problem: The MST Report says that "the antenna was rotated through 360 degrees and the maximum received signal recorded."[17] First, we note that since the antenna has a narrow (estimated 22 degrees[18]) aperture in the vertical plane, a "360 degree" rotation only searches for signal arriving horizontally. The antenna in Figure 1 appears to be about 5' tall and 2' wide. The antenna basically receives signals from an elliptical pattern about 22 degrees high and 69 degrees wide and rejects most power coming from other directions. Since the maximum signal was recorded over the full circle sweep, no multiple arrivals added as they would in a low gain WSD antenna.

---

[16] See Mark A. Sturza and Farzad Gazvinian, "White Space Engineering Study: Can Cognitive Radio Technologies Operating in the TV White Spaces Completely Protect Licensed TV Broadcasting?, New America Foundation, Wireless Future ProgramWorking Paper #16 (January 2007), at pp. 26-27. The study summarizes several European studies of building penetration loss. Figure 30 (at p. 27) combines the various European studies to conclude that "the probability of building penetration loss exceeding 37 dB is negligible. The maximum value reported by the research was 30 dB." The Sturza/Gazvinian study is available at: http://www.newamerica.net/files/WorkingPaper16_WhiteSpaceSensing_Sturza.pdf

[17] MST Report, p. 6.

[18] This is assuming a frequency of 527.25 MHz or that of channel 28.

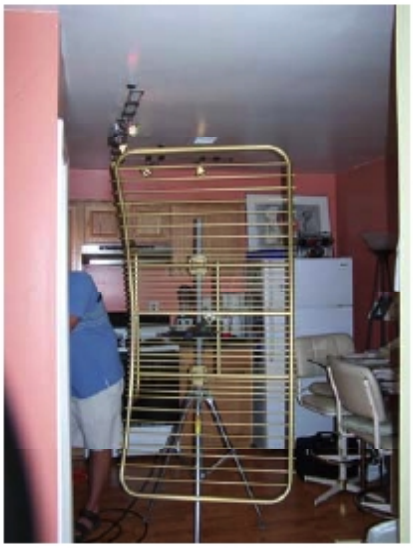

Kitchen Measurement Location

Outdoor Location

Figure 4 MST Report's antenna in use (MST Report at p. 20)

As is clear in Figure 4, in the horizontal plane in one picture there is a refrigerator and in the other there is a pickup truck. These objects in the near field of this large antenna may dramatically affect the gain and antenna pattern of the antenna. Furthermore, the antenna shown in Figure 4 is unlikely to be a calibrated laboratory antenna and we postulate that it may be an antenna made for CATV headends. The report does not give a manufacturer and model number nor calibration data.[19] It is reasonable to assume that this antenna has a gain that depends on both the frequencies and polarization of the incoming signal. While it is customary to explain in such test reports how this gain, along with frequency dependent cable loses, was accounted for in the final data, there is nothing in the MST Report that explains whether such calculations were done or how they were done.

Inconsistencies in Report Data

In addition to the methodology, the ability to explain all results with physical intuition is critical prior to any conclusions. This is associated with any critical engineering practices. Table 1 shows the data in the MST Report for indoor and outdoor measurements at the same location. The only change is that the data has been sorted by channel number.

[19] By contrast, the report clearly says that the Rhode and Schwartz spectrum analyzer was calibrated.

DTV Channel	Kitchen Measurement dBm	Outdoor Measurement dBm	Difference
28	-125.2	-107.2	18.0
29	-122.2	-80.0	42.2
30	-119.5	-93.8	25.7
41	-124.9	-81.1	43.8
43	-121.0	-90.3	30.7
57	-124.5	-100.2	24.3

Table 1. Indoor/Outdoor Measurements[20]

It is troubling that the difference between indoor and outdoor measurements at the same location is so large, especially for cases of near identical frequencies. The variability for 6 MHz variation is up to 27.2 dB could indicate either some extremely relevant propagation phenomena or a measurement methodology problem. Absent a technical explanation in the report, measurement errors as described above are suspected causes.

The Scylla and Charybdis of measuring low strength TV signals

Measurements of low strength signals such as is being considered for WSDs and was done in the MST Report are not a standard procedure. One has a classic Scylla and Charybdis-like problem in designing the measurement configuration. Some design approaches tend to overestimate signal strength while some tend to underestimate them. In the range of -114 dBm signals can not be directly measured with commercially available equipment. Something must be done to either design new equipment (hence, Prototypes A and B) or increase the signal strengths to the point where they can be quantified by readily available test equipment. The two basic approaches possible are to use amplifiers or to use a high gain antenna (i.e., one that is narrowly focused like a search light and thus more effective in a specific direction). High gain antennas effectively amplify a signal but with concomitant limitations related to their directionality.

While amplifiers work well in controlled circumstances in a laboratory, in the real work the presence of closely spaced signals of widely differing amplitudes tends to overload amplifiers and result in "receiver-generated intermodulation" – the creation in the receiver of apparent new signals that do not exist in the real world.[21] The MST Report states,

> All measurements were made outdoors at six feet above ground using a high gain antenna directly connected to a spectrum analyzer. This configuration was employed to avoid the use of active elements (i.e., amplifiers) that could affect the results.[22]

[20] *Ibid.,* p. 21

[21] Receiver-generated intermodulation is not just a theoretical concern. It was the technical phenomenon that was responsible for two key spectrum policy problems at FCC: the "Nextel problem" with interference to 800 MHz public safety systems and the "FAA EMI" problem with concerns of interference from FM stations near 108 MHz and FAA-operated Instrument Landing Systems just above 108 MHz.

[22] MST Report at p. 6

It does not explain that the "effect" on the results would be an overestimation of the TV signal strength,[23] something that would be against the self-interest of MST and NAB. Instead, they chose an alternative technique that tended to *underestimate* the signal strength. Instead of an amplifier they used a 16 dBi antenna that effectively increase the signal output by 16 dB, or by a factor of 40 over an industry-standard rod-like omnidirectional antenna that a WSD would likely use. Since antennas are passive systems with no amplifiers or power sources, a gain of 40 is obtained by looking at 1/40th of the sphere surrounding the antenna. So imagine a sphere around the antenna and a hole about 1/40th of the surface area that is the only direction that power is admitted from.[24]

The antenna in Figure 4 appears to be roughly 5' tall and 2' wide. The antenna basically receives signals from an elliptical pattern about 22 degrees high and 69 degrees wide and rejects most power coming from other directions. By contrast, an omnidirectional rod antenna, as would be expected for a WSD, would be much less selective about azimuth and elevation and would see multiple arriving signals from all directions.

In locations with good propagation from the transmitter this difference would not be important as most of the power would arrive from the direct path from the transmitter. However, the very locations that are of key interest in this proceeding are ones that are adversely sited with signals arriving from other than the direct path. Indeed, the signals in such locations may well come from nearby reflections and might not even arrive in the horizontal plane – so the three degree focus on the horizontal plane discriminates against such signals even though an WSD would see them. Thus the design chosen for measurements in the MST report is explicitly biased to underestimate signal strengths and prejudice findings against WSD

How else might the measurements been done? A series of reports[25] by Shared Spectrum Company, funded by the National Science Foundation, describes band observations that had similar problems. Figure 5 shows a pre-selector Shared Spectrum design that provided amplification without generating intermodulation.

[23] Receiver generated intermodulation in the receiver might appear as a stronger signal although there are ways to confirm whether this is happening, e.g. attenuate the receiver input slightly and see if the detected signal decreases the same amount. Receiver generated intermodulation would decrease faster than the input decrease since it is nonlinear.

[24] Although in practice a small amount of power is received from other directions or "sidelobes".

[25] For example, Shared Spectrum Company, "New York City Spectrum Occupancy Measurements September 2004."

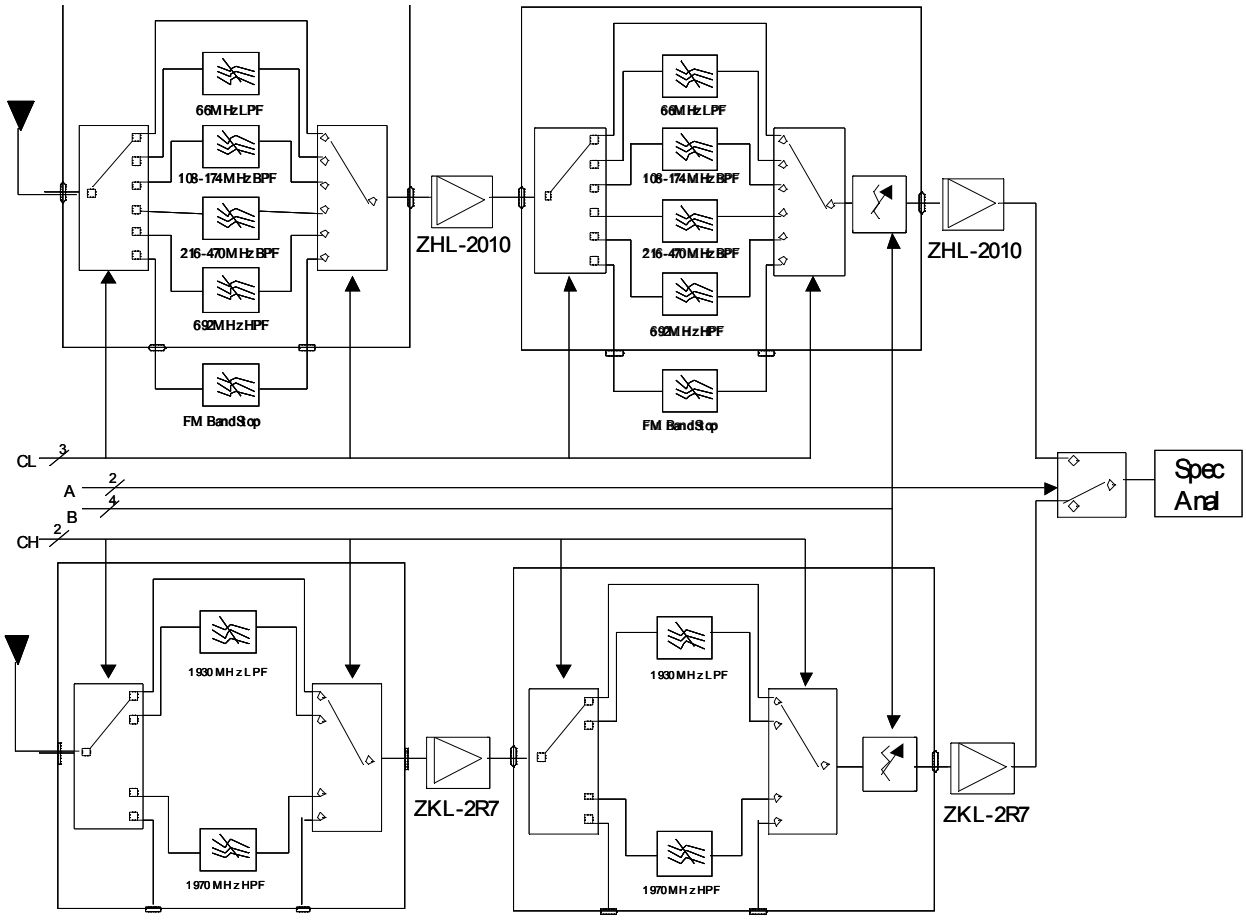

Figure 5 Shared Spectrum preselector

The MST report describes the use of a Rhode and Schwarz (R&S) Model FSH-3-TV.[26] Rohde and Schwarz, a well known German manufacturer of electronic test equipment has recognized the dynamic range limits of this type of equipment and makes a specific attachment, the FSHTV-Z60 that is similar to the approach used by Shared Spectrum to get unbiased results. This device sells for less than $2,000. The MST Report contains no discussion about why this attachment to the device used was not considered, but it is critical for correcting for this problem.

CONCLUSIONS

Unlicensed wireless technologies have improved remarkably over the past decade and will certainly continue to do so in the years ahead. Recent OET testing has clearly demonstrated the technological feasibility of WSD in unused TV bands. This innovative re-use of spectrum is far more efficient than current practices and has the potential to generate a new boom in consumer electronics, applications, and services. Of course, feasibility inferred from early proof-of-concept prototypes is a different and less rigorous exercise than the device certification process

[26] Information on it is available at http://www.rohde-schwarz.com/product/FSH3-TV.html

that will apply once the FCC determines operating parameters for interference protection and a far larger number of companies undertake R&D to meet that challenge.

Opponents to these changes have raised several legitimate, entirely surmountable, concerns. Unfortunately, data and research methodologies introduced into the public record to dissuade the Commission from allowing WSD have been fraught with systemic methodological errors. Careful analysis by the Commission is warranted, particularly when selecting appropriate protection levels for TV band devices and services. Yet a balance should also be sought that measures the benefits of WSD for the general public vis-a-vis the myriad requests being made by opponents of WSD to prevent this access. Potential solutions exist to facilitate the successful transition to WSD use. The next step is for the Commission to set explicit and reasonable parameters for the technical specifications for WSD.

Respectfully submitted,

Michael Calabrese
Sascha D. Meinrath
New America Foundation
Wireless Future Program
1630 Connecticut Avenue, NW
7th Floor
Washington, DC 20009
(202) 986-2700

Harold Feld
Media Access Project
1625 K St., NW
Suite 1118
Washington, DC 20006
(202) 232-4300
Counsel for NAF, et al.

September 4, 2007