HOGAN & HARTSON

Hogan & Hartson LLP
Columbia Square
555 Thirteenth Street, NW
Washington, DC 20004
+1.202.637.5600 Tel
+1.202.637.5910 Fax

www.hhlaw.com

December 12, 2007

Michele C. Farquhar
Partner
(202) 637-5663
MCFarquhar@hhlaw.com

BY ELECTRONIC FILING

Ms. Marlene H. Dortch
Secretary
Federal Communications Commission
445 Twelfth Street, SW
Washington, D.C. 20554

Re: Ex Parte Presentation of Polaris Wireless, Inc.
PS Docket No. 07-114, CC Docket No. 94-102, and WC Docket No. 05-196

Dear Ms. Dortch:

On December 11, 2007, Polaris Wireless, Inc. ("Polaris") representatives Martin Feuerstein, Chief Technology Officer, and Adam Boris, Vice President of Operations, along with the undersigned, counsel to Polaris, met with Ronald Repasi, Bruce Romano, James Miller, Salomon Satche, and Bruno Pattan of the Office of Engineering and Technology; Paul Marrangoni of the Public Safety and Homeland Security Bureau; Ziad Sleem of the Wireless Telecommunications Bureau; and Chip Fleming and Paul Locke of the International Bureau. On December 12, 2007, Mr. Feuerstein, along with Mark Brennan and I, met with Derek Poarch, Erika Olsen, Timothy Peterson, and Jeff Cohen of the Public Safety and Homeland Security Bureau. During the meetings, Polaris distributed the attached presentation and technical paper regarding wireless E911 issues, including the potential for improved location accuracy and the benefits of open, standard interfaces.

Pursuant to Section 1.1206(b)(2) of the Commission's rules, I am filing this notice electronically in the above-referenced dockets. Please contact me directly with any questions.

Respectfully Submitted,

/s/ Michele C. Farquhar

Michele C. Farquhar
Counsel to Polaris Wireless, Inc.

Enclosures

cc: Derek Poarch
Erika Olsen
Timothy Peterson
Jeff Cohen
Paul Marrangoni
Ronald Repasi
Bruce Romano
James Miller
Salomon Satche
Bruno Pattan
Ziad Sleem
Chip Fleming
Paul Locke

Polaris Wireless
Price/Performance Leader for Wireless Location

Hybrid Systems and Open, Standard Interfaces

December 12, 2007

Polaris Wireless
Price/Performance Leader for Wireless Location

Polaris Wireless

- **Software-only systems for network-based location in E911 and location services**
  - **Wireless Location Signatures (WLS) algorithms for location using pattern-matching approaches**
- **Eighteen operating carrier E911 Phase II network deployments with 26.1 M POPs covered in 34 states**
  - **About 10,000 E911 Phase II emergency call locates processed per day**
  - **Five infrastructure vendors supported in GSM, three in TDMA**
- **Fundamental technology research and development for network-based and hybrid location technologies**
  - **Fourteen patents granted**
  - **Additional 24 patents pending**

Polaris Wireless
Price/Performance Leader for Wireless Location

Current E911 Deployments

Total coverage area: ~2.8 M km²

No. of towers: ~10,000

Polaris Wireless
Price/Performance Leader for Wireless Location

Wireless Location Signatures (WLS)

- Signatures based on standard radio network measurements (signal strengths, time delays, etc.)
- Pattern-match against a prediction database to estimate location

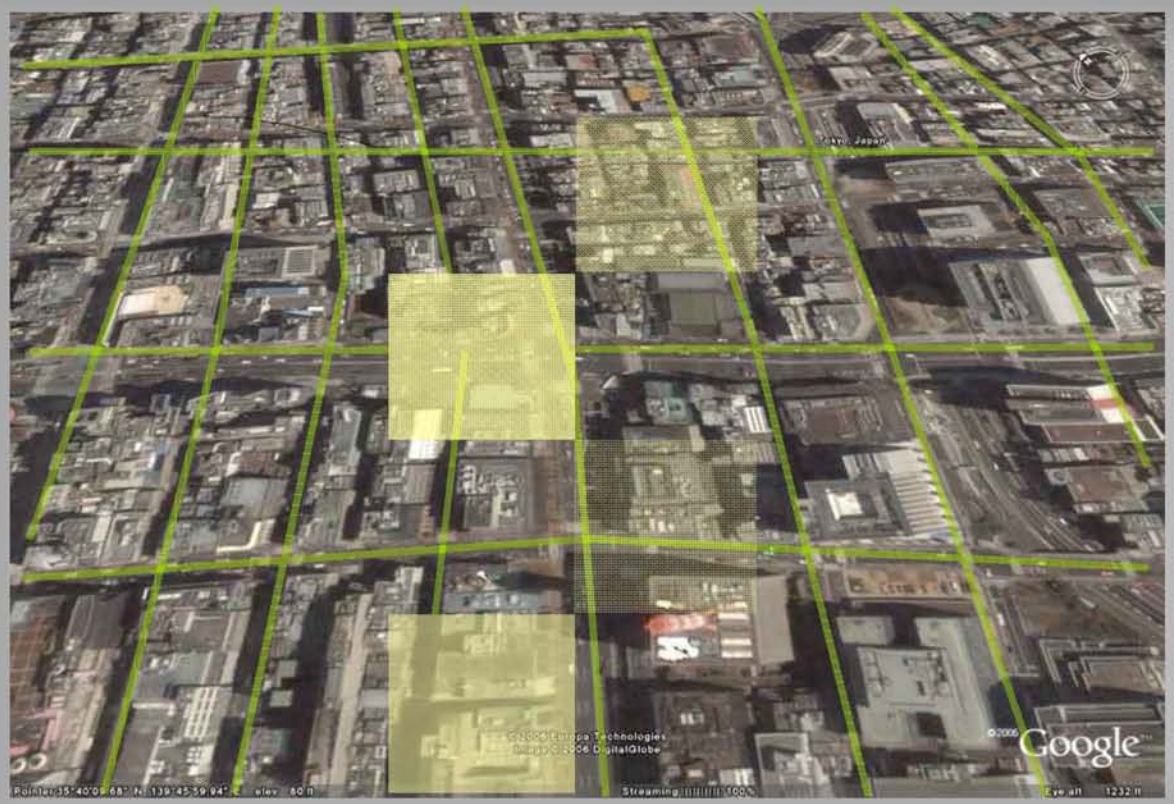

- WLS is fully supported in UMTS and GSM – No handset change-outs
- Software-only approach – No radio hardware network overlay

Polaris Wireless
Price/Performance Leader for Wireless Location

Blind Trial with Wireless Carrier in New York City

Accuracy:
<50m, 74% cases
<100m, 91% cases
<150m, 99% cases
<200m, 100% cases
100% Yield

Polaris Wireless
Price/Performance Leader for Wireless Location

Blind Trial with North American Wireless Carrier on UMTS

Polaris Wireless
Price/Performance Leader for Wireless Location

Trial with Wireless Carrier in San Francisco on GSM

Accuracy:
<44m, 67% cases
<135m, 95% cases
100% Yield

Polaris Wireless
Price/Performance Leader for Wireless Location

Autonomous Monitoring System (AMS)

Mobile Test Units

Wireless Network ***IP Network***

Polaris Autonomous Monitoring System

Data Validation & Integration

Polaris Location Center

Dispatcher

Integrity Check & Route Planning

Optimization Tools

AMS highly automates the deployment and maintenance of the WLS system

Polaris Wireless
Price/Performance Leader for Wireless Location

Hybrid WLS Plus A-GPS

Polaris WLS

- WLS performs best in high cell density areas (urban)
- WLS performs well indoors

A-GPS

- A-GPS performs best in open sky areas (rural, suburban)
- A-GPS does not perform as well in urban areas and indoors

- Hybrid combining can provide more consistent accuracy across the range of call environments
  - Can be implemented as fallback (pick WLS or A-GPS) or joint location estimate (combine information from both)
  - Supported by current generation A-GPS handsets in market
  - 2G and 3G air interfaces

Polaris Wireless
Price/Performance Leader for Wireless Location

San Francisco A-GPS Performance

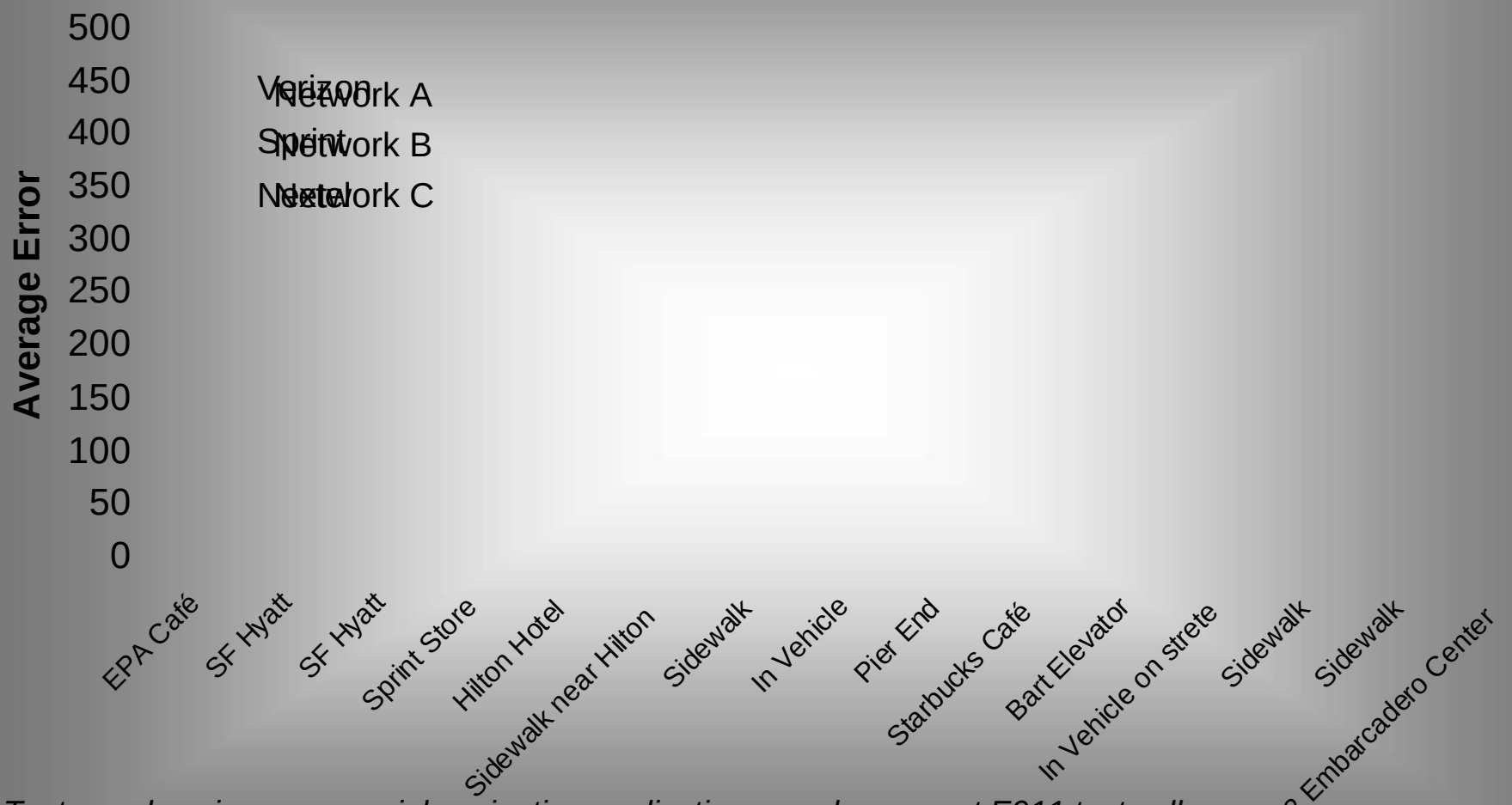

Tests made using commercial navigation applications on phones, not E911 test calls.

Polaris Wireless
Price/Performance Leader for Wireless Location

Hybrid WLS Improvement from Field Tests

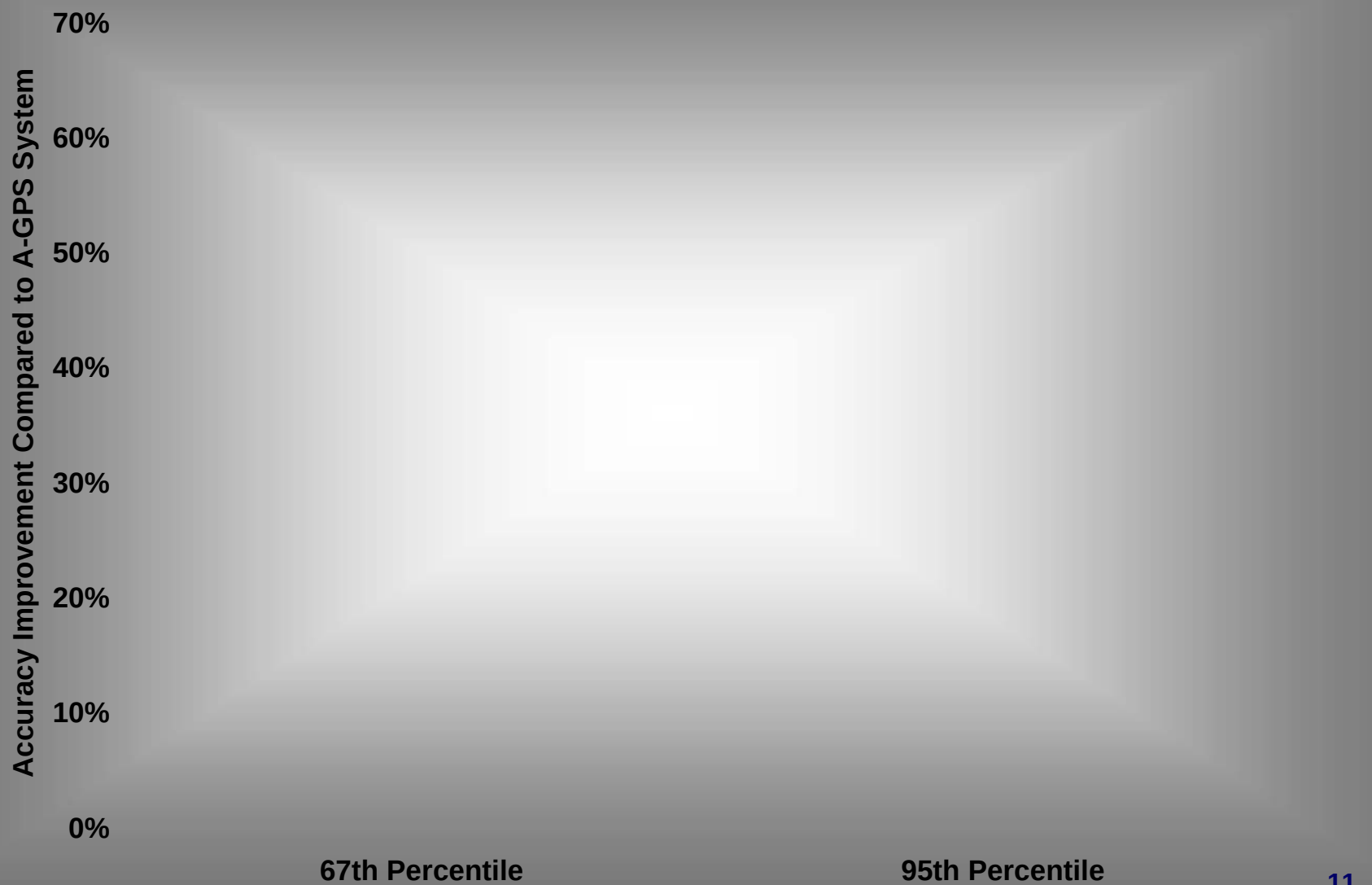

Polaris Wireless
Price/Performance Leader for Wireless Location

More Than One Hybrid Solution Exists

- Polaris's WLS hybrid is an attractive and field-tested solution for GSM, UMTS (WCDMA) and CDMA2000
  - WLS accuracy is actually improved in complex, cluttered, non-line-of-sight environments with shadowing, such as dense urban areas
    - Pattern-matching has better performance in these challenging multipath environments than time of arrival technologies (e.g. UTDOA, GPS)
  - Compared to UTDOA, no network RF hardware overlay is required for WLS
  - Compared to UTDOA, no extra backhaul data transport is required for WLS
- Polaris strongly disagrees with TruePosition, Inc.'s assertions in their Nov. 8, 2007 ex parte filing
  - Hybrid UTDOA + A–GPS is not the only complete solution for E911
  - UTDOA is not the only indoor solution for CDMA operators
  - Hybrid UTDOA + A–GPS solution does not clearly provide the best E911 performance

Polaris Wireless
Price/Performance Leader for Wireless Location

Implementing Open, Standard Interfaces

- Implementing open, standard interfaces allows third–party location solutions
  - Creates a competitive and open marketplace for much-needed advanced location technologies
  - Allows wireless carriers in the marketplace to decide which solutions to implement
- In some cases open interfaces have been defined in the air interface standards but not implemented by particular infrastructure vendors
  - The industry should be encouraged to implement these open, standard interfaces as part of E911 evolution

Polaris Wireless
Price/Performance Leader for Wireless Location

Example 3GPP UMTS Standard Interface

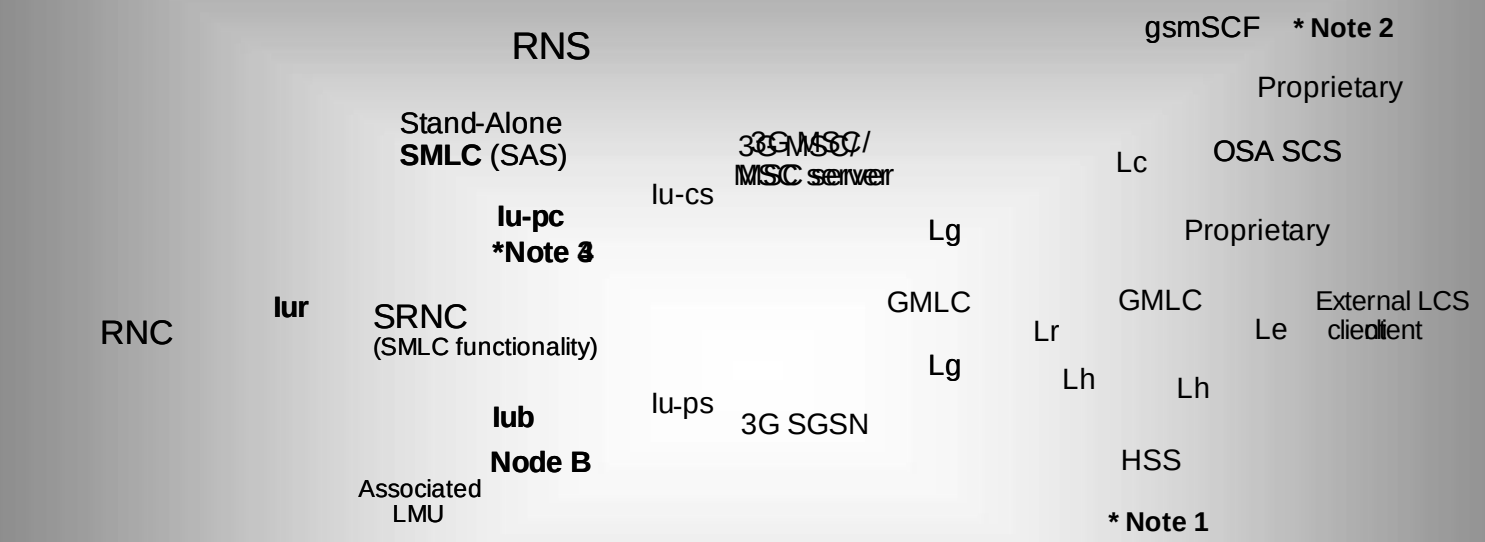

Note 1: The HSS includes both 2G -HLR and 3G HLR functionality.

Note 2: As one alternative the LCS client may get location information directly from GMLC, which may contain OSA Mobility SCS with support for the OSA user location interfaces.
Note 3: The SMLC may be either a stand-alone network element (SAS) or an internal function of the RNC.

Polaris Wireless
Price/Performance Leader for Wireless Location

Open Interface Allows Third-Party Solutions

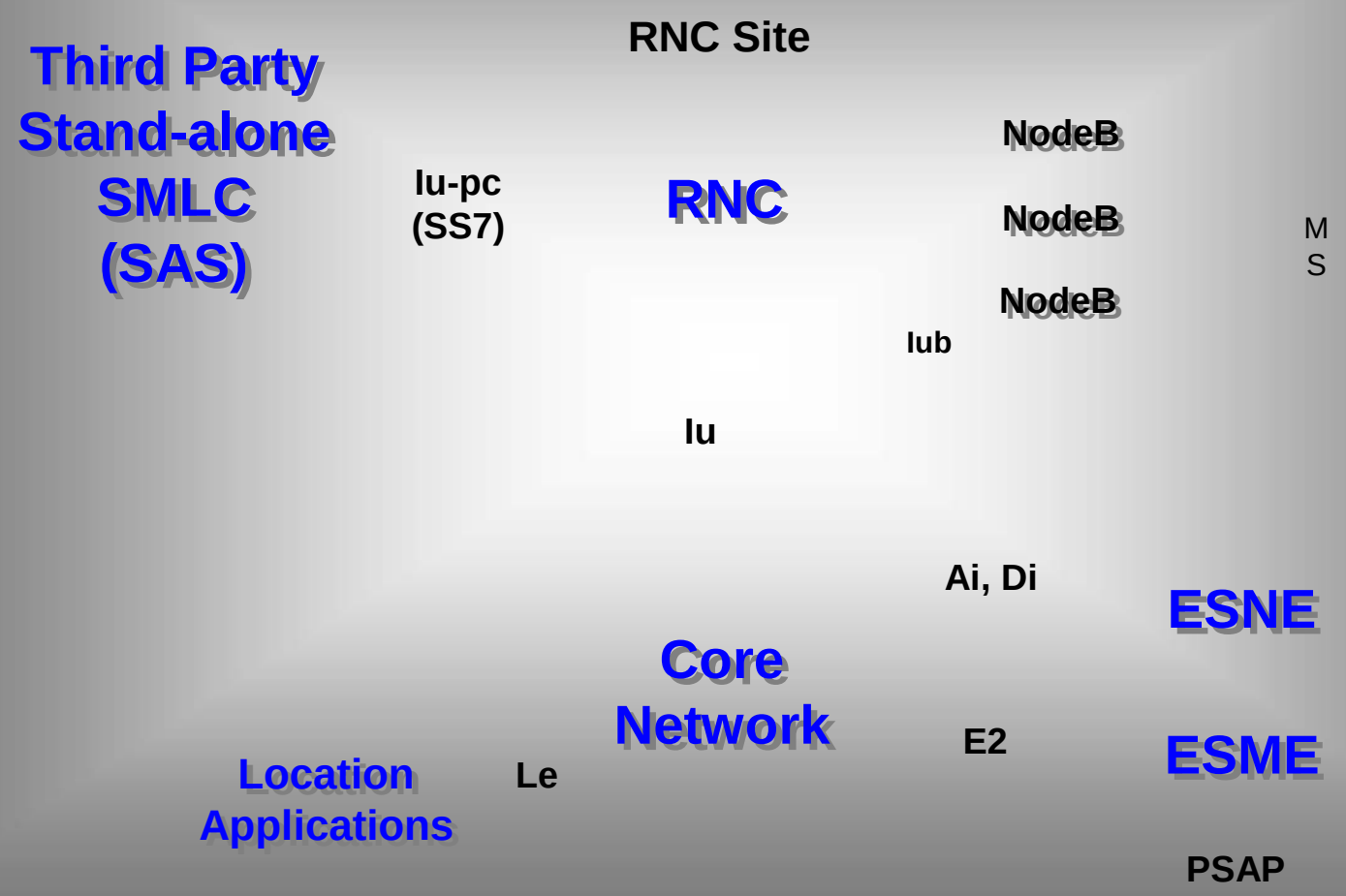

Polaris Wireless
Price/Performance Leader for Wireless Location

Conclusions

- Hybrid systems can improve E911 Phase II location accuracy and consistency beyond current levels
  - Particularly true for challenging GPS scenarios in urban canyons and indoor environments
  - Polaris WLS is a viable and attractive solution for hybrid systems
- Implementing open, standard interfaces allows third–party location solutions
  - The industry should be encouraged to implement these open, standard interfaces
- Standards changes can improve location accuracy over time by adding new measurement information
  - E911 stakeholders groups would be one way to facilitate this type of standards evolution

FACILITATING WIRELESS E911 ACCURACY IMPROVEMENTS AND IMPLEMENTATION OPTIONS THROUGH OPEN, STANDARD INTERFACES

POLARIS WIRELESS, INC.

PS Docket No. 07-114, CC Docket No. 94-102, and WC Docket No. 05-196

December 12, 2007

Polaris Wireless, Inc. (Polaris)[1] submits this paper to demonstrate how infrastructure vendor implementation of open, standard interfaces to external location systems can facilitate improved location accuracy innovation and access, as well as numerous options for wireless carriers to implement the Commission's E911 goals. As described herein, technology innovators such as Polaris need open interfaces to the network infrastructure to facilitate continued progress towards the Commission's E911 location accuracy goals. In addition, this paper explains how industry standards-setting bodies can assist the wireless E911 location accuracy improvement process in the United States by incorporating ongoing changes to support innovative and improved location solutions.

Wireless Network Infrastructure. Wireless networks typically consist of base stations connected to base station controllers (BSCs), radio network controllers (RNCs), mobile switching centers (MSCs) and other network equipment. This radio network equipment collectively is called "wireless infrastructure" and is supplied by infrastructure equipment vendors. Many important functions associated with managing network access (including resource assignment and mobility management) are handled by this infrastructure equipment. In addition, the equipment interconnects with external centers (*e.g.*, networked computer servers) for specialized functions,

[1] Founded in 1999, Polaris is a privately held company that has developed and commercialized a wireless location software technology for the delivery of location services, including E911 Phase II public safety applications. Polaris's software products have been deployed extensively since 2003 by thirteen U.S. wireless carriers in eighteen TDMA IS-136 and GSM networks to meet E911 Phase II emergency call location requirements and enhance customer safety. Currently, Polaris's software-only location systems provide E911 Phase II services to approximately 900 PSAPs nationwide and process approximately 10,000 emergency call locates daily.

such as authentication, billing, service delivery, and applications. This interconnection typically occurs through open, standard interfaces, which allow the external centers to access the information they need to perform their functions and interact with the network. Many of the functions performed by these external centers are vital to wireless system operations for consumers, including providing location technology for E911.

I. The Implementation of Open, Standard Interfaces to External Location Centers is Critical to Achieving Wireless E911 Accuracy Improvements.

There is always a trade-off between those functions implemented within the radio network itself by infrastructure vendors and those provided externally through standard interfaces. As demonstrated by the wireless industry's current progress in deploying E911 Phase II systems, external, open interfaces enable the use of location technologies from third-party companies such as Polaris's Wireless Location Signatures (WLS) system, as well as UTDOA and A-GPS systems. Open interfaces allow technical innovations, such as Polaris's hybrid system, to advance key goals (*e.g.*, E911 Phase II). The implementation of open interfaces, however, depends on wireless infrastructure vendors and their specific product roadmaps. If infrastructure vendors decide not to implement open, standard interfaces, then third-party vendors, including Polaris, are effectively locked-out from providing location technology improvements that can greatly enhance the safety of our citizens.

Developing wireless infrastructure products is an extremely complex and challenging undertaking in which vendors must juggle many competing priorities. Numerous new features, performance improvements, and bug fixes must be planned for implementation on vendors' product roadmaps before they go through the development, testing, and deployment cycles. Many conflicting priorities arise from carrier and vendor requests, requiring judgment calls about what gets implemented and when. If open interfaces are implemented, however, the marketplace (*i.e.*,

wireless carriers) can decide, based on performance and cost comparisons, which solutions are preferable—either those created in-house by infrastructure vendors, or those provided externally by third-party location companies. The Commission has indicated that improving E911 Phase II location accuracy should be an industry priority,[2] and the fact that open, standard interfaces facilitate this goal should be weighed into infrastructure vendors' roadmap priorities and feature implementation decisions.

Examples of open, standard interfaces. The benefits of implementing open, standard interfaces can be illustrated using a specific example from the current wireless landscape. For the UMTS air interface that is being deployed for 3G services by many carriers, the 3GPP standards-setting organization has specified an open interface for location services, including emergency call and commercial location applications. As shown in Figure 1 below, taken from 3GPP Technical Specification TS 23.002,[3] the standard interface called Iu-pc (depicted within the oval) connects the infrastructure vendor's RNC network equipment to a Stand-alone Serving Mobile Location Center (SAS), potentially provided by a third party. The SAS is the position-determining entity performing the location estimation and delivering results based on triggers and information provided by the RNC. As Note 3 in the diagram of Figure 1 states, "the SMLC [Serving Mobile Location Center] may either be a stand-alone network element (SAS) or an internal function of the RNC." If the RNC equipment does not include the Iu-pc interface, the

[2] *See Wireless E911 Location Accuracy Requirements*, PS Docket 07-114, *Revision of the Commission's Rules to Ensure Compatibility with Enhanced 911 Emergency Calling Systems, Association of Public-Safety Communications Officials-International, Inc. Request for Declaratory Ruling*, CC Docket No. 94-102, *911 Requirements for IP-Enabled Service Providers*, WC Docket No. 05-196, Notice of Proposed Rulemaking, FCC 07-108 (rel. Jun. 1, 2007) ("*NPRM*"); *Wireless E911 Location Accuracy Requirements*, PS Docket 07-114, *Revision of the Commission's Rules to Ensure Compatibility with Enhanced 911 Emergency Calling Systems, Association of Public-Safety Communications Officials-International, Inc. Request for Declaratory Ruling*, CC Docket No. 94-102, *911 Requirements for IP-Enabled Service Providers*, WC Docket No. 05-196, Report and Order, FCC 07-166 ¶ 14 (rel. Nov. 20, 2007) ("*Report and Order*") ("While we acknowledge that meeting the [PSAP-level accuracy requirement] deadline and benchmarks may require the investment of significant resources by certain carriers, we believe that such expenditures are justified by the accompanying public safety benefits.").

location function necessarily becomes an internal function of the infrastructure vendor's RNC. As a result, third parties cannot provide SAS location center functionality as an additional E911 Phase II implementation option for carriers.

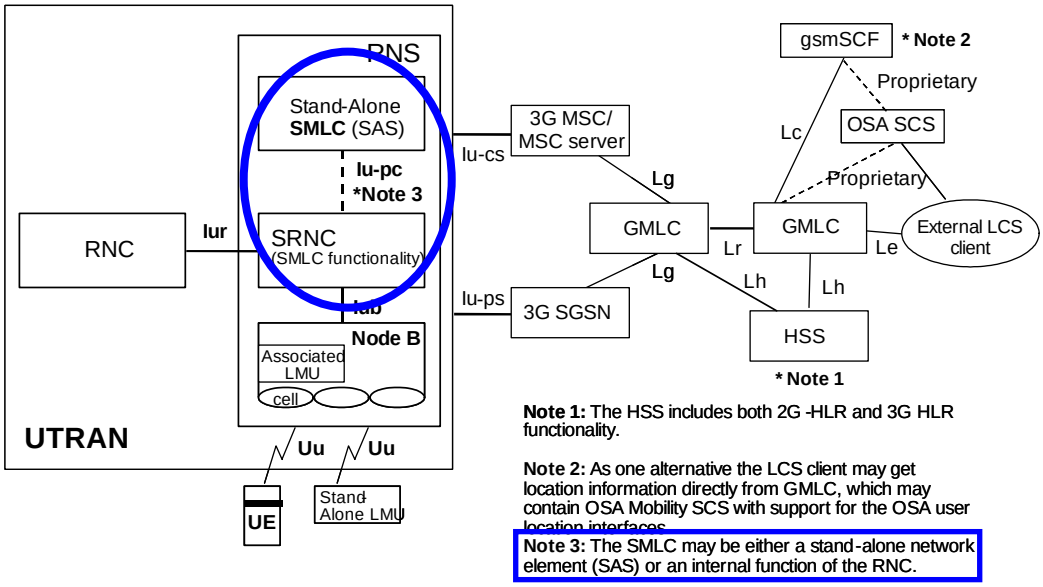

Figure 1. Diagram from 3GPP Technical Specification TS 23.002 showing the Iu-pc interface (shown inside oval) between the RNC and the Stand-Alone SMLC.

The importance of implementing this open, standard Iu-pc interface in UMTS is further illustrated in Figure 2 below, which depicts a simplified network diagram tailored specifically to the E911 scenario. In Figure 2, the infrastructure vendor's RNC interconnects through other "core network" equipment to the PSAP to deliver E911 voice calls and location information. For a third party to provide the location function, the Iu-pc interface must be implemented in the RNC by the infrastructure vendor to allow interconnection to an external SAS location server. Otherwise, by default, the location function resides internally within the RNC and is typically implemented by the infrastructure vendor (possibly excluding third-party companies' location solutions).

[3] 3GPP TS 23.002 V8.1.1, "3rd Generation Partnership Project; Technical Specification Group Services and Systems

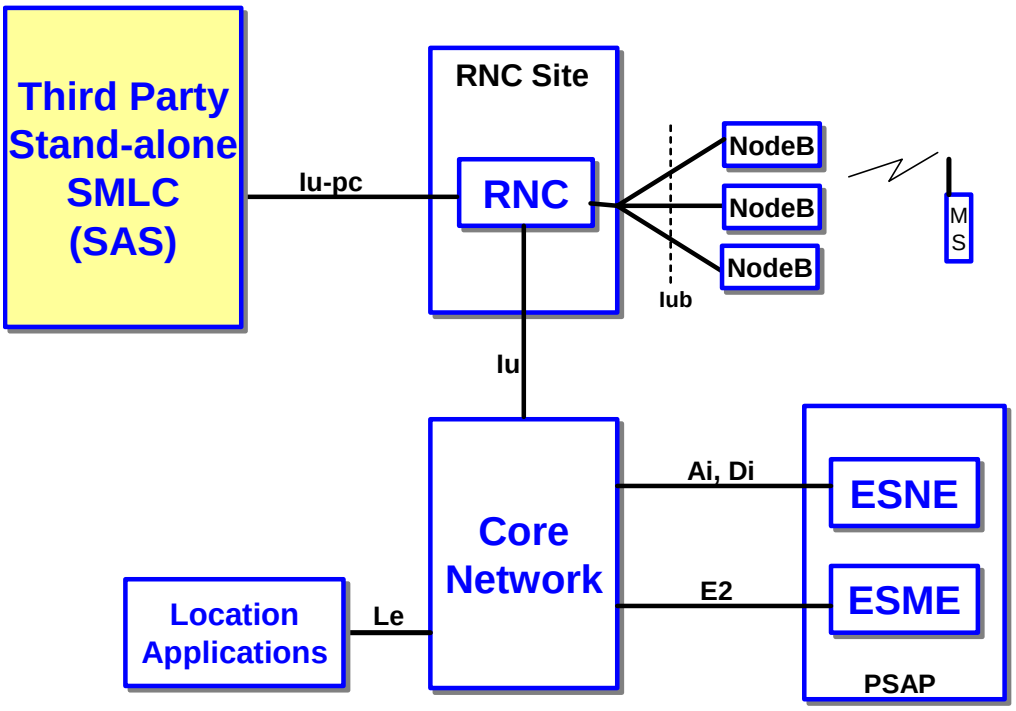

Figure 2. Network diagram illustrating E911 location application with interconnections between wireless carrier's network and the PSAP. The open, standard Iu-pc interface between the RNC and the third-party SAS location center is shown at the upper left. In UMTS, a base station is called a Node B.

In this UMTS example, without the implementation of the open Iu-pc interface, the location functionality must reside within the RNC itself, thereby denying access to third-party vendors to the information needed to perform the location function. Integrating the location functionality with the RNC rules out wireless carriers' ability to choose external, third-party location solutions. To the extent possible, the industry should be encouraged to implement open interfaces to improve E911 Phase II location accuracy and the development of innovative technology solutions.

Aspects; Network Architecture (Release 8)," at 35 (Oct. 2007).

II. Standards Bodies Can Advance Location Accuracy Capabilities and Improve E911 Phase II Location Performance by the Ongoing Incorporation of Standards Changes.

Wireless air interface technologies are in a continual state of change, with improvements and fixes regularly incorporated during their life cycles. Such modifications typically are made through change request (CR) processes within the standards bodies that control the specifications for the individual technologies (*e.g.*, 3GPP for GSM and UMTS, 3GPP2 for CDMA2000, and IEEE for 802.11 WiFi and 802.16 WiMax). Standards bodies usually are composed of industry participants and voting members from the carrier and vendor communities. By prioritizing and defining the standards changes, these bodies ensure an orderly progression of functionality and performance for their respective air interfaces.

Location technology in general, and E911 Phase II location systems in particular, can significantly benefit from enhancements through the CR processes. For example, additional measurements that could aid in location determination and error reduction often can be incorporated into various phased releases of the standards. These improvements take time to implement because infrastructure and/or handset changes often are required, in the form of software or hardware modifications to existing systems. Therefore, it is important to conceive and define the necessary changes as early as possible in order for them to reach the marketplace in a timely manner.

Polaris has been active in the standards bodies for a number of air interface technologies, with a goal of incorporating location technology capabilities into initial specifications as well as adding accuracy enhancements through CRs. In particular, Polaris has been an active participant in 3GPP for GSM and UMTS (and the future Long Term Evolution), as well as the Open Mobile Alliance for Secure User Plane Location. In these efforts, Polaris has received support and encouragement from a number of carriers and vendors also interested in improving location

performance. Polaris has also heard other vendors state, however, that the industry does not need additional location technologies.

Obviously, the dynamics associated with the evolution of wireless air interface standards are driven by a global marketplace with many different carrier needs represented. Seen through this worldwide perspective, the United States' E911 Phase II requirements are merely a subset of the overall needs and desires. For example, the Commission's E911 Phase II requirements are rather unique and are not yet replicated in many other countries at the present time, although there are signs that this may change in the future. The need for high-performance emergency call location technologies in the United States contrasts with global carrier needs for commercial location-based services (LBS) for the growing body of consumer applications. Clearly, the accuracy, latency, and consistency requirements for LBS are much different than those for E911 Phase II emergency call services. This dichotomy creates conflicting demands in the standards-setting organizations over which direction to drive location technologies (*i.e.*, cheaper but lower accuracy for global LBS versus higher accuracy for E911).

The industry should work together on technical solutions to benefit E911 accuracy, including air interface standards evolutions. E911 stakeholders groups may be one way to facilitate this type of standards evolution. If the industry fails to do so, it would be missing an excellent opportunity to take significant steps towards the Commission's accuracy goals. With the realities of lengthy standardization, development, and deployment cycles, the time is now, rather than later, to incorporate standards improvements so that the benefits can be harvested in the near term, consistent with the Commission's goals in the E911 proceeding.

***Polaris's Wireless Location Signatures Technology*.** Polaris's WLS technology, which relies on open, standard interfaces, has several key advantages over alternative technologies: (1) no modifications are required in the handset, as opposed to GPS/A-GPS technologies; and (2) the

location algorithms are implemented on a standard computer server, which requires no hardware additions to the base stations, as opposed to other network-based technologies such as U-TDOA (uplink time-difference-of-arrival) or AOA (angle-of-arrival) that require a new radio hardware overlay. In addition, the WLS system achieves high accuracy and reliability results due to its reliance on measurements that are made as a part of normal wireless network operations. The WLS technology is based on the observation that the radio environment varies from location to location due to features such as terrain, buildings, foliage, and cellular signal coverage.[4]

Because the WLS system uses serving and neighbor cell measurement information to estimate location, it is most accurate in high cell density environments where many measurements are often reported, such as dense urban and many indoor settings.[5] Unlike other technologies, such as TDOA and AOA, WLS does not rely on line-of-sight paths between the base stations and handset, so performance can actually be improved in heavily cluttered, multipath environments. Moreover, due to the system's ability to leverage existing infrastructure, the initial investment to deploy an E911 solution with WLS is a fraction of the cost of alternate technologies, and deployment times are significantly faster than what is necessary to install a new radio network overlay or to replace the installed base of wireless handsets in the marketplace.

Polaris is actively working to improve location accuracy by incorporating additional measurement information into the signatures, including the use of predicted radio signal penetration into local buildings for indoor location estimation. While some of this additional

[4] If enough elements of the radio environment can be measured with sufficient accuracy, each set of measured values provides a radio signature that uniquely identifies a particular location. In typical cellular networks, handsets measure the signal strengths (or signal-to-interference ratios) of serving and neighbor sector broadcast control channels for normal handover operations. These measurements form the basis of the radio signatures used to locate the handsets.

[5] WLS is well-suited to provide high accuracy in urban and indoor situations because of its unique ability to take advantage of shadowing conditions that can degrade other approaches that rely on line-of-sight circumstances, such as TDOA, AOA and GPS. First, urban areas typically contain extremely high cell densities because of the large concentrations of wireless users; therefore, many neighbor measurements are reported in the signatures, enabling especially accurate location estimation. Second, through use of radio propagation modeling and geographical information system data and measurements, the PSD (Predicted Signature Database) that models the radio environment also contains information about local shadow fading conditions. This is particularly critical in urban areas, where non-line-of-sight conditions are predominant due to extensive building obstructions and clutter.

information will require standards changes, the enhanced signatures will greatly improve future accuracy and performance.

Conclusion. As the Commission indicated in the *NPRM* and *Report and Order*, improving E911 Phase II accuracy improvement can save lives and further public safety and homeland security goals.[6] The *NPRM* essentially implores the industry to seek innovative solutions to the difficult challenges associated with increasing accuracy. Without question, implementing open, standard interfaces supports this goal by allowing creative, third-party solutions. Encouraging the industry to implement open interfaces also allows wireless carriers in the market to decide which solutions to implement based on their own criteria and needs. In addition, standards changes that enable increased location accuracy will greatly support the Commission's wireless E911 goals.

The implementation of open, standard interfaces to external location solutions, as well as ongoing standards changes, can improve E911 Phase II location accuracy. Moreover, these efforts also facilitate innovative solutions to the complex and challenging E911 issues raised in the *NPRM* by creating a competitive and open marketplace for much-needed advanced location technologies.

Polaris Wireless, Inc.

Manlio Allegra
Chief Executive Officer
Martin J. Feuerstein
Chief Technical Officer
Polaris Wireless, Inc.
5201 Great America Parkway
Suite 440
Santa Clara, CA 95054

[6] *See NPRM* ¶¶ 5-6; *Report and Order* ¶¶ 9-10, 15.