HOGAN & HARTSON

Hogan & Hartson LLP
Columbia Square
555 Thirteenth Street, NW
Washington, DC 20004
+1.202.637.5600 Tel
+1.202.637.5910 Fax

www.hhlaw.com

February 6, 2008

Michele C. Farquhar
Partner
(202) 637-5663
MCFarquhar@hhlaw.com

BY ELECTRONIC FILING

Ms. Marlene H. Dortch
Secretary
Federal Communications Commission
445 Twelfth Street, SW
Washington, D.C. 20554

Re: *Ex Parte* Presentation of Polaris Wireless, Inc.
PS Docket No. 07-114, CC Docket No. 94-102, and WC Docket No. 05-196

Dear Ms. Dortch:

On February 5, 2008, Polaris Wireless, Inc. ("Polaris") representatives Martin Feuerstein, Chief Technology Officer, Adam Boris, Vice President of Operations, and Norman Shaw, Executive Director, Business Development and Technical Standards, along with the undersigned, counsel to Polaris, met with Julius Knapp, Ronald Repasi, Alan Stillwell, James Miller, and Salomon Satche of the Office of Engineering and Technology; Paul Marrangoni of the Public Safety and Homeland Security Bureau; Ziad Sleem of the Wireless Telecommunications Bureau; and Chip Fleming of the International Bureau. During the meeting, Polaris responded to questions about its Wireless Location Signatures technology and distributed the attached presentation regarding wireless E911 issues, including the potential for improved location accuracy and the benefits of open, standard interfaces.

Pursuant to Section 1.1206(b)(2) of the Commission's rules, I am filing this notice electronically in the above-referenced dockets. Please contact me directly with any questions.

Respectfully Submitted,

/s/ Michele C. Farquhar

Michele C. Farquhar
Counsel to Polaris Wireless, Inc.

Enclosures

cc: Julius Knapp
Ronald Repasi
Alan Stillwell
James Miller
Salomon Satche
Paul Marrangoni
Ziad Sleem
Chip Fleming

Polaris Wireless
Price/Performance Leader for Wireless Location

Hybrid Systems and Open, Standard Interfaces

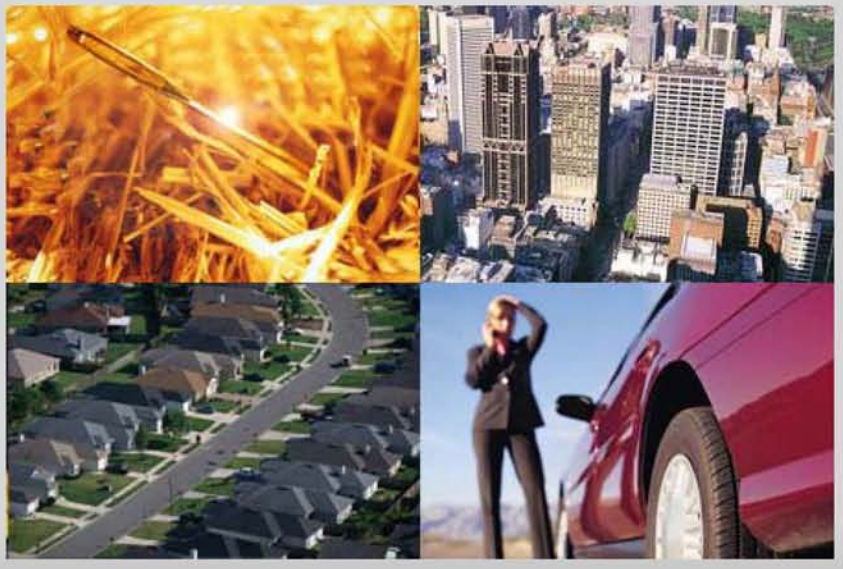

February 5, 2008

Polaris Wireless
Price/Performance Leader for Wireless Location

Polaris Wireless

- **Software-only systems for network-based location in E911 and location services**
  - **Wireless Location Signatures (WLS) algorithms for location using pattern-matching approaches**
- **Eighteen operating carrier E911 Phase II network deployments with 26.1 M POP's covered in 34 states**
  - **About 10,000 E911 Phase II emergency call locates processed per day**
  - **Five infrastructure vendors supported in GSM, three in TDMA**
- **Fundamental technology research and development for network-based and hybrid location technologies**
  - **Fourteen patents granted**
  - **Additional 24 patents pending**

Polaris Wireless
Price/Performance Leader for Wireless Location

Current E911 Deployments

Total coverage area: ~2.8 M km²

No. of towers: ~10,000

Polaris Wireless
Price/Performance Leader for Wireless Location

Wireless Location Signatures (WLS)

- Signatures based on standard radio network measurements (signal strengths, time delays, etc.)
- Pattern-match against a prediction database to estimate location

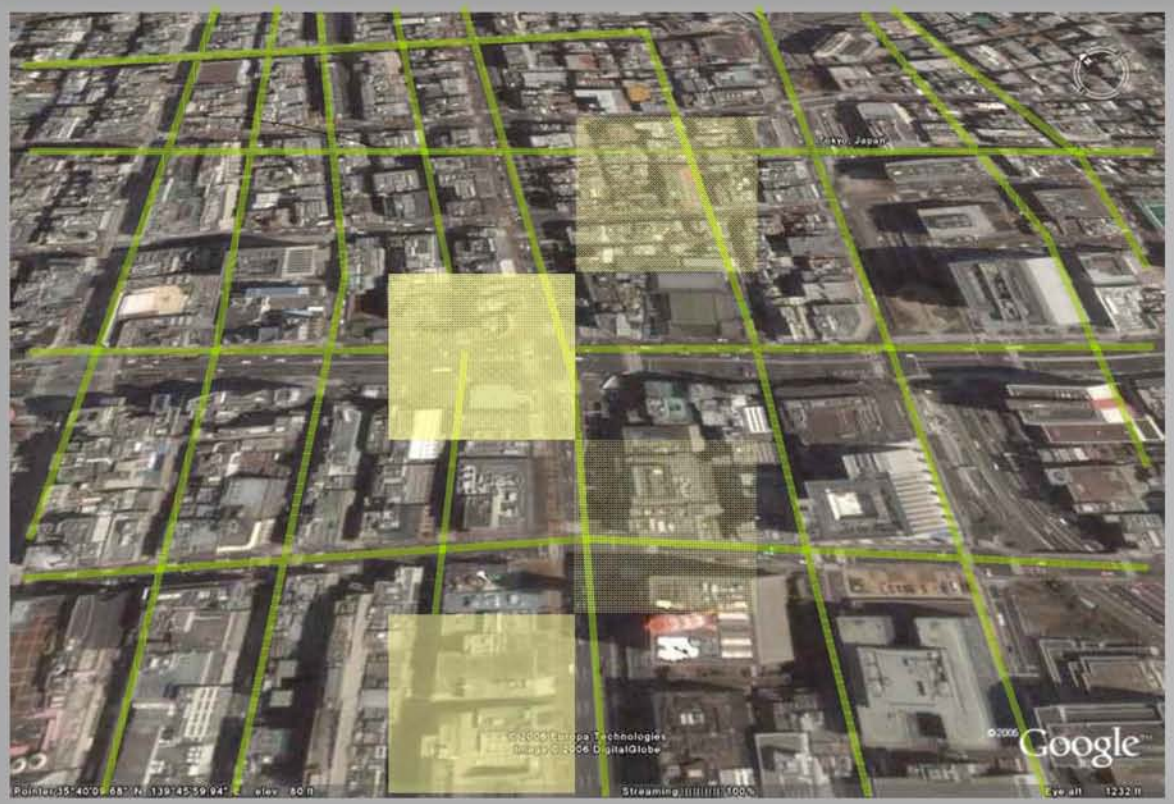

- WLS is fully supported in UMTS and GSM – No handset change outs
- Software-only approach – No radio hardware network overlay

Polaris Wireless
Price/Performance Leader for Wireless Location

Blind Trial with Wireless Carrier in New York City

Accuracy:
<50m, 74% cases
<100m, 91% cases
<150m, 99% cases
<200m, 100% cases
100% Yield

Polaris Wireless
Price/Performance Leader for Wireless Location

Autonomous Monitoring System (AMS)

Mobile Test Units

Wireless Network

IP Network

Polaris Autonomous Monitoring System

Data Validation & Integration

Polaris Location Center

Dispatcher

Integrity Check & Route Planning

Optimization Tools

AMS highly automates the deployment and maintenance of the WLS system

Polaris Wireless
Price/Performance Leader for Wireless Location

Hybrid WLS Plus A-GPS

Polaris WLS

- WLS performs best in high cell density areas (urban)
- WLS performs well indoors

A-GPS

- A-GPS performs best in open sky areas (rural, suburban)
- A-GPS does not perform as well in urban areas and indoors

- Hybrid combining can provide more consistent accuracy across the range of call environments
  - Can be implemented as fallback (pick WLS or A-GPS) or joint location estimate (combine information from both)
  - Supported by current generation A-GPS handsets in market
  - 2G and 3G air interfaces

Polaris Wireless
Price/Performance Leader for Wireless Location

Hybrid WLS Improvement from Field Tests

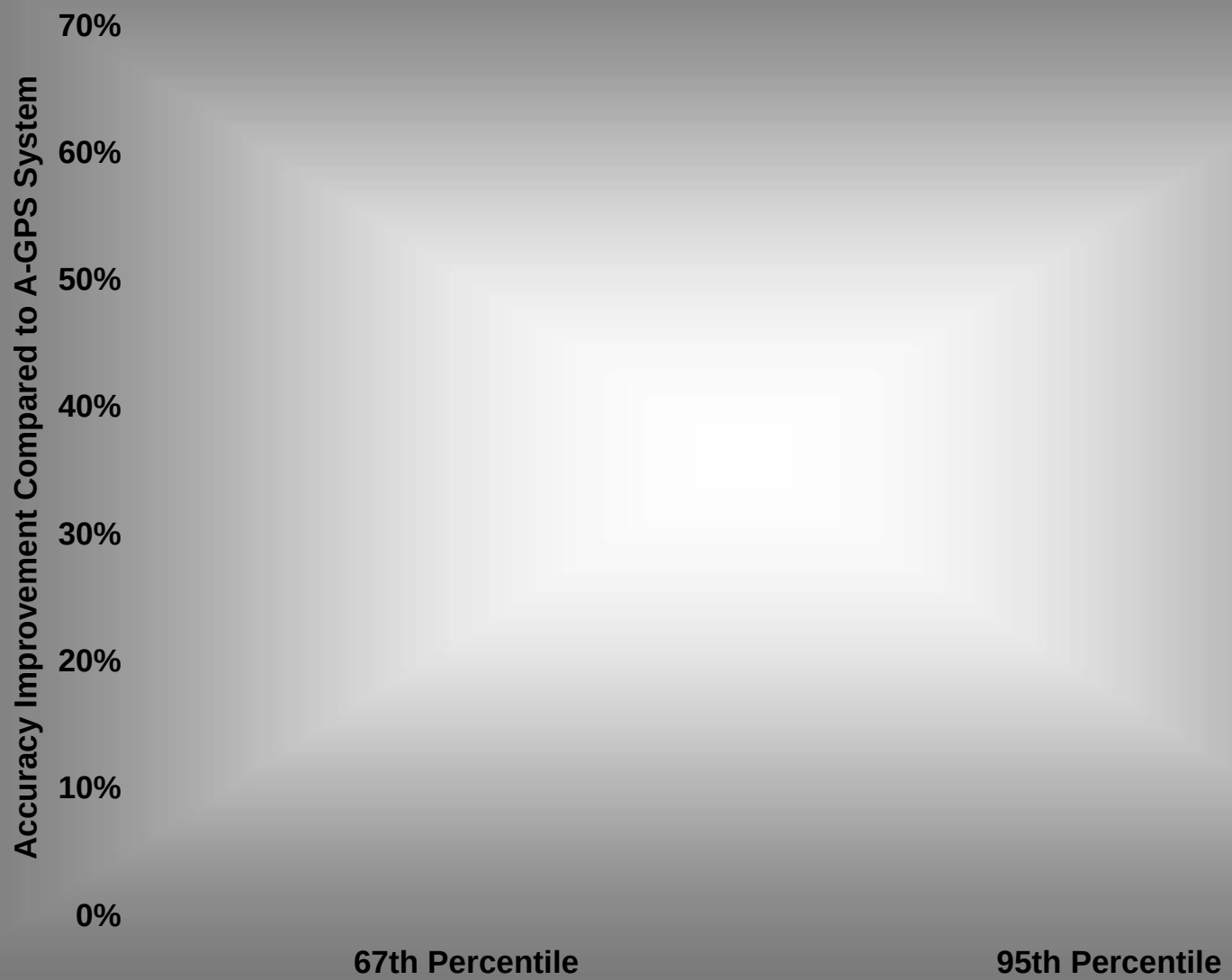

Polaris Wireless
Price/Performance Leader for Wireless Location

Implementing Open, Standard Interfaces

- Implementing open, standard interfaces allows third-party location solutions
  - Creates a competitive and open marketplace for much-needed advanced location technologies
  - Allows wireless carriers in the marketplace to decide which solutions to implement
- In some cases open interfaces have been defined in the air interface standards but not implemented by particular infrastructure vendors
  - The industry should be encouraged to implement these open, standard interfaces as part of E911 evolution

Polaris Wireless
Price/Performance Leader for Wireless Location

Example 3GPP UMTS Standard Interface

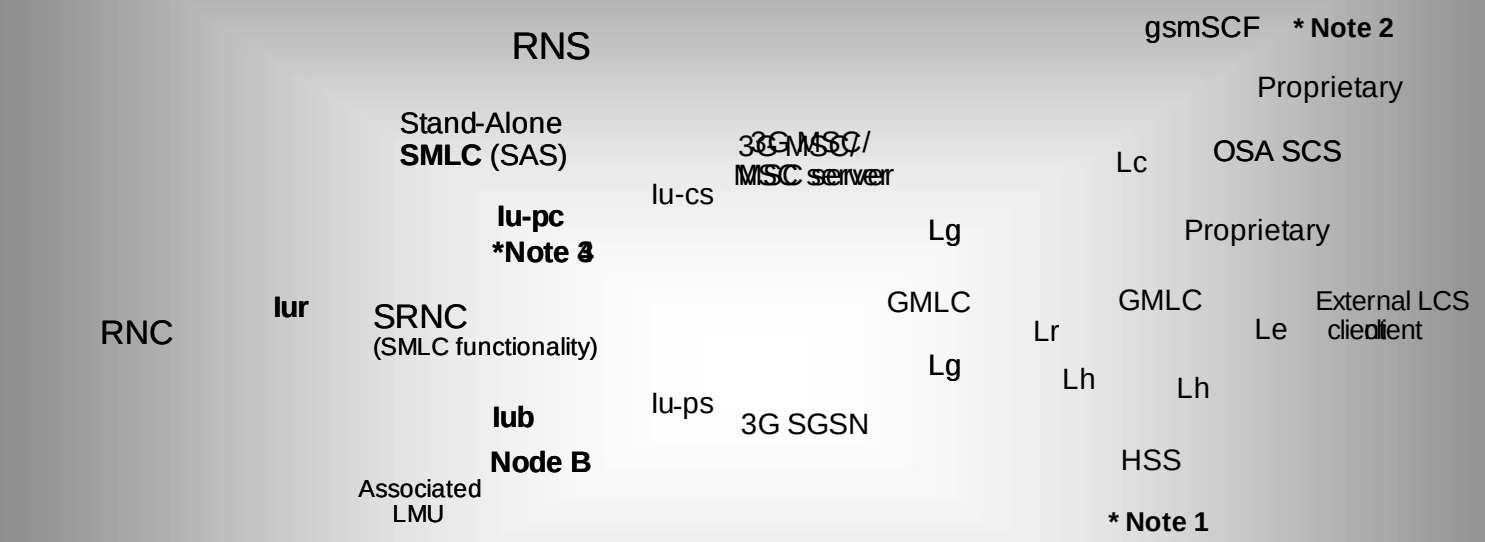

Note 1: The HSS includes both 2G -HLR and 3G HLR functionality.

Note 2: As one alternative the LCS client may get location information directly from GMLC, which may contain OSA Mobility SCS with support for the OSA user location interfaces.
Note 3: The SMLC may be either a stand-alone network element (SAS) or an internal function of the RNC.

Polaris Wireless
Price/Performance Leader for Wireless Location

Interface Allows Third-Party Solutions

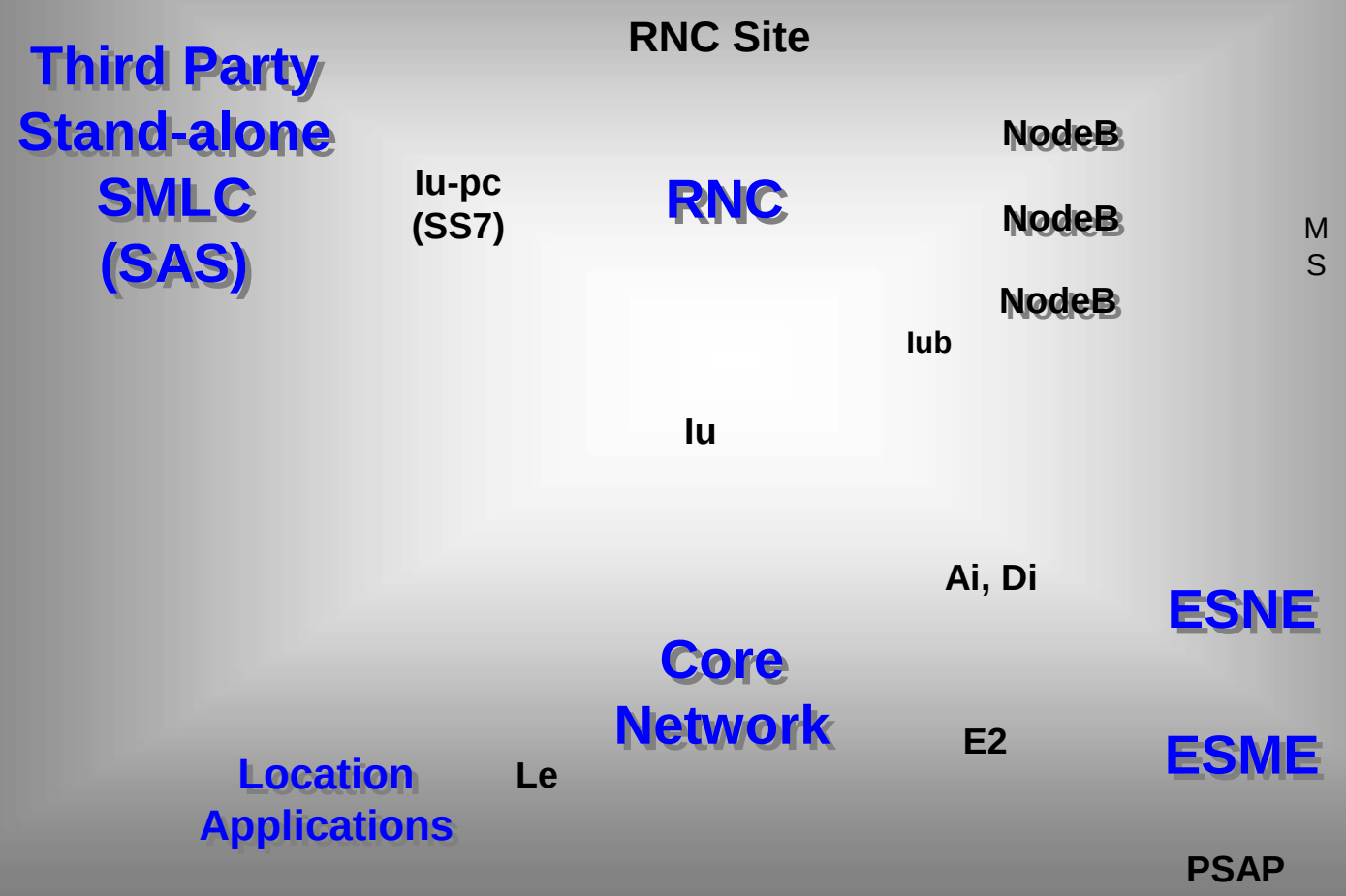

Polaris Wireless
Price/Performance Leader for Wireless Location

Conclusions

- Hybrid systems can improve E911 Phase II location accuracy and consistency beyond current levels
  - Particularly true for challenging GPS scenarios in urban canyons and indoor environments
  - Polaris WLS is a viable and attractive solution for hybrid systems
- Implementing open, standard interfaces allows third-party location solutions
  - The industry should be encouraged to implement these open, standard interfaces
- Standards changes can improve location accuracy over time by adding new measurement information
  - E911 stakeholders groups would be one way to facilitate this type of standards evolution