AWS-3 and AWS-2

ICO and the freedom figure logo are trademarks of ICO Global Communications. All other trademarks are the property of their respective owners.

Summary

- AWS-3 Proceeding
  - AWS-3 Should Not Expand
  - Interference To MSS/ATC User Terminals
  - Spectral Efficiency

- AWS-2 Proceeding
  - H Block Interference To MSS Satellite Receivers
  - H Block Interference To ATC Base Stations

Band Plan

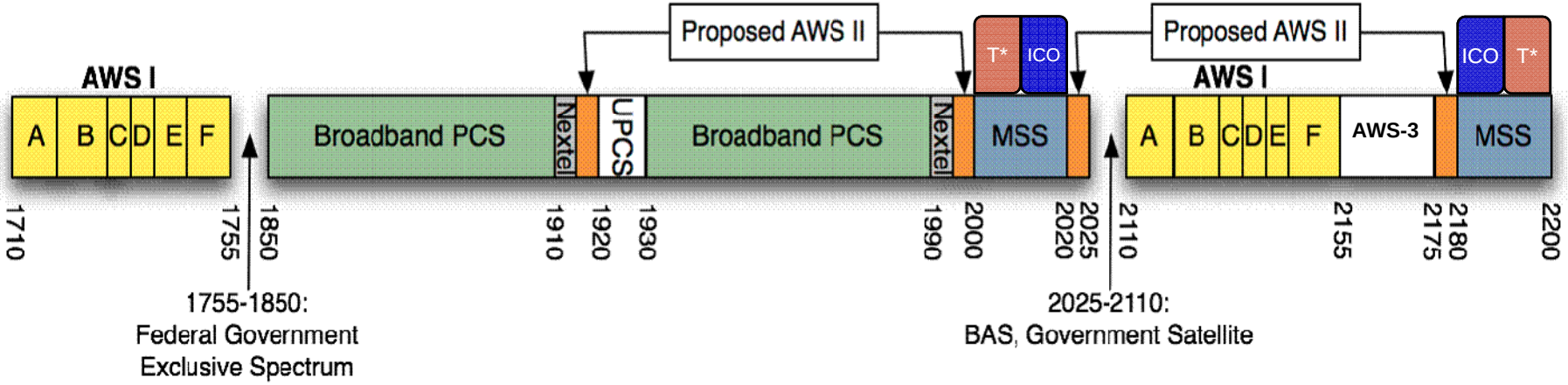
AWS I
A
B
C
D
E
F
Broadband PCS
Nextel
UPCS
Broadband PCS
Nextel
Proposed AWS II
T*
ICO
MSS
Proposed AWS II
ICO
T*
AWS I
A
B
C
D
E
F
AWS-3
MSS
1710
1755
1850
1910
1920
1930
1990
2000
2020
2025
2110
2155
2175
2180
2200
1755-1850:
Federal Government
Exclusive Spectrum
2025-2110:
BAS, Government Satellite

AWS-3 Should Not Expand

- ICO has supported the broadest range of opportunities for the AWS-3 spectrum to promote innovation and deployment of new advanced services
- ICO has stated its support for retaining a 2x5 MHz AWS J Block (2020-2025 MHz paired with 2175-2180 MHz), valuable in itself for providing advanced wireless communications
- 20 MHz is sufficient for viable broadband services
  - M2Z and Sprint have filed in support
  - For TDD use: WiMAX profiles allow for 3.5 MHz, 5 MHz, 7 MHz, 8.75 MHz, 10 MHz bandwidths
    - Sprint showed a viable offering of 3 x 5 MHz carriers
    - Record does not show a need for two 10 MHz carriers or any other configuration requiring more than 20 MHz total
- Current record indicates 2155-2175 MHz for either auxiliary downlink or TDD use, with 5 MHz of internal guard band between TDD and FDD operations:
  - Sprint: "TDD operators in the AWS-3 band cannot place operational TDD channels up to the very edge of the 2155 MHz and 2175 MHz band without their own AWS-3 base station receivers experiencing harmful interference from adjacent-channel base station transmitters. TDD operators in the AWS-3 band therefore must offset their channels by 2.5 megahertz from the AWS-3 band edges to avoid receiving harmful interference from adjacent-channel operators."
- ***Proposed plan of 2155-2180 MHz introduces adjacencies to MSS that are not addressed in the record - at the expense of a 2x5 MHz FDD block***

MSS and ATC Mobile Stations Interference

- ICO mobiles require guard band to avoid interference from TDD handsets
  - ICO stated support for TDD when a harmonized J Block also served to provide MSS with 7.5 MHz of separation (J Block + 2.5 MHz per Sprint) – given the proper service rules for AWS-3, and with additional MSS/ATC user terminal filtering
  - Extending TDD operations to 2180 MHz will cause receiver overload to MSS/ATC mobiles as the dominant interference mechanism, especially given the sensitive satellite terminal front end receiver
    - M2Z's proposal to use 700 MHz rules without mandatory internal guard bands will cause receiver overload to MSS/ATC mobiles
    - Even with a 2.5 MHz internal AWS-3 guard band (per Sprint), the resulting in-band interference will cause receiver overload to MSS terminals
- Out-of-band emissions must also be controlled
  - In order to protect the adjacent mobile receive bands, ICO user terminals currently are required to meet 70+10 Log P at 5 MHz from the edge of the MSS license
  - Similarly, the TDD allocation should be limited to 2155-2175 MHz with stringent OOBE limits

Mobile to Mobile Interference to Satellite Devices

- As shown below, the receive chain in the RF front end of a satellite device is inherently more sensitive than the RF front end of a traditional PCS or cellular mobile

Basic RF front end of PCS/cellular mobile (receive):

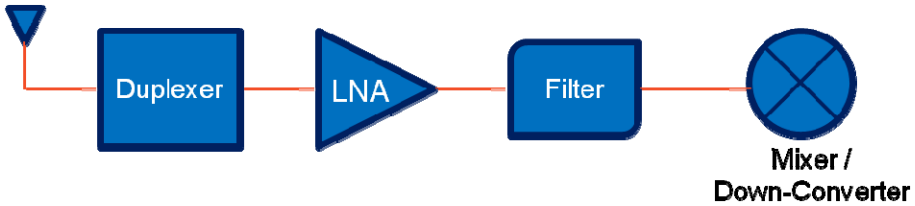

Basic RF front end of Satellite mobile (receive):

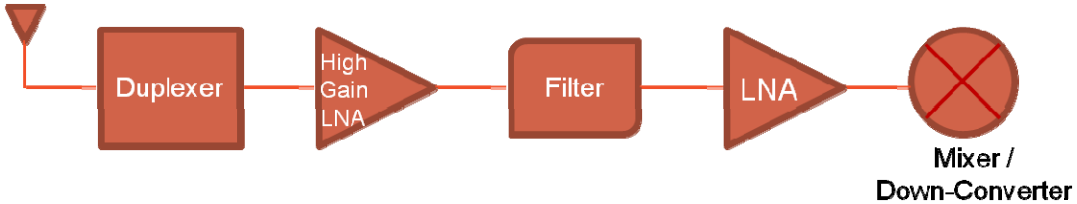

- The LNA in the satellite front end has higher gain than a typical PCS LNA, and is cascaded with a second LNA to minimize noise figure and close the link to the satellite; however, this design also reduces receiver blocking performance, making satellite devices more susceptible to adjacent channel interference
- Thus mobile-to-mobile interference will be more severe when satellite mobiles are the victim (AWS-3 to MSS/ATC) than when PCS mobiles are the victim (MSS/ATC to PCS)
- If 700 MHz mobile power limits are applied to AWS-3, MSS/ATC mobiles will experience severe receiver overload. Therefore AWS-3 mobile transmissions must be limited.

Spectral Efficiency (1/2)

- When adjacent services must undergo a Base Transmit to Mobile Transmit transition, or vice versa, guard band is required to avoid interference.
- Permitting flexible use in 2155-2175 MHz broadens the range of possible services, but introduces two transitions, reducing spectral efficiency
- Major licensed bands include explicit or implicit guard bands to provide interference protection from other commercial operations:
  - 800 MHz Cellular and SMR Bands: 2 MHz guard band
    - Nextel noted the need for tight BTS transmit filters to control OOBE – even with a 2 MHz guard band, and using a narrow-band technology with relatively tight roll-off characteristics
  - EBS/BRS channel blocks contain built-in guard band
    - 5.5 MHz per channel or 16.5 MHz per block
    - Provides an aggregate 1 to 1.5 MHz of guard band between competing operations
  - 700 MHz Band:
    - For the Upper 11+11 MHz C Block, the 3GPP band plan excludes 1 MHz of the C Block as additional guard band from the adjacent base station transmissions
    - Lower 700 MHz blocks are licensed in 6 MHz channels, providing an effective 1 MHz guard band between neighboring 5 MHz carriers
  - AWS:
    - A-F and J blocks are harmonized with surrounding blocks pending AWS-3 outcome
    - If AWS-3 allows TDD then internal guard band will be required to protect adjacent operations

Spectral Efficiency (2/2)

- Filtering and guard band requirements are a function of carrier bandwidth – the wider the carrier, the more stringent the requirements
  - The analysis on the record based on 5 MHz carriers showed a need for 2.5 MHz of guard band.
  - If a new proposal employs 10 MHz carriers, guard band size must be revisited.

- Introducing multiple transitions within a band is spectrally inefficient – 2.5 MHz or more per transition is spent in guard band.
  - Downlink only operation in AWS-3 would be more spectrally efficient to be harmonized with AWS-1 and J Block and MSS downlink
  - If flexible use in 2155-2175 MHz is supported, guard bands can and should be internalized to avoid creating inefficiencies in adjacent bands.

AWS-3 Summary

- Designating the 2155-2175 MHz AWS-3 block as flexible use must be accompanied by regulatory requirements to protect adjacent MSS user terminals:
  - Mandatory internal guard band of at least 2.5 MHz
  - Device EIRP limit of 250 mW
  - Device OOBE must not exceed 70 + 10 Log P at 2180 MHz

- AWS-3 expansion to 2180 MHz must not occur given the significant uncontrolled interference to MSS/ATC devices
  - Device OOBE of 70 + 10 log P at 2180 MHz would be difficult to meet
  - To prevent overload, device EIRP must be further reduced to 1 mW, an untenable coverage range

H Block Interference to MSS Satellite Receivers

- The upper H Block will introduce base station transmissions in a band adjacent to MSS/ATC satellite and base station reception
- In-band interference from H block base stations cannot be solved at the satellite
  - ICO G1 has been successfully launched
  - High-power transmissions in the upper end of the H Block will appear in-band to the satellite and will interfere with satellite reception
  - ***As MSS requested in earlier comments, the H Block must include an explicit guard band of at least 1 MHz to protect MSS operations, and aggregate base station EIRP for the block must not exceed 32 dBW per sector***
- This BTS EIRP limit should not pose a burden as it consistent with the numerous arguments in the record to reduce mobile transmit power in the lower portion of the H Block
  - Major PCS operators suggest a mobile EIRP limit of 30 dBm from 1915-1917 MHz (vs. 33 dBm for the rest of the PCS block), and a significantly reduced EIRP of 6 dBm from 1917-1920 MHz
  - ***Since a wireless system is designed to balance forward and reverse link coverage, a lower base station transmit power would be sufficient to close the link to a device transmitting with 24 dB less power***
  - The regulatory requirement for H Block base station EIRP should allocate power as follows to mirror the device power limitations, and meet the aggregate 32 dBW:
    - 1995-1997 MHz: 29 dBW/MHz, 3 dB down from 32 dBW/MHz;
    - 1997-1999 MHz: 8 dBW/MHz, 24 dB down from 32 dBW/MHz

H Block Interference to ATC Base Stations

- To protect ATC base station receivers, OOBE limits, victim receiver filtering and coordination are required.

- ICO engineering analyses demonstrate a need for the following OOBE limits, similar to those adopted for the EBS/BRS band to protect from base-to-base interference:
  - BTS-BTS separation distances greater than 1.5 km: OOBE of 70 + 10 log P at 3 MHz from the channel edge
  - BTS-BTS separation less than 1.5 km: OOBE of 70 + 10 log P – 20 log (D_{km}/1.5) at 3 MHz from the channel edge
  - When co-located, limit the undesired signal level at the ATC base station receiver to no more than -108 dBm/5 MHz (scaled to the appropriate bandwidth)

- TerreStar has stated that H Block licensees would need to supply ATC base station filters to reject the strong adjacent channel signal, and coordinate with ATC licensees to ensure adequate interference protection.

H Block Summary

- A combination of guard band, power limits, out-of-band emissions (OOBE) limits and victim BTS receiver filtering must be implemented to avoid interference to satellite and ATC base station receivers.

- Satellite Protection:
  - 1 MHz guard band provided from 1999-2000 MHz
  - Aggregate BTS EIRP per sector limit of 32 dBW for 1995-1999 MHz
    - 1995-1997 MHz: 29 dBW/MHz, 3 dB down from 32 dBW/MHz;
    - 1997-1999 MHz: 8 dBW/MHz, 24 dB down from 32 dBW/MHz

- ATC Base Station Protection:
  - OOBE Limits:
    - BTS-BTS separation distances greater than 1.5 km: OOBE of 70 + 10 log P at 3 MHz from the channel edge
    - BTS-BTS separation less than 1.5 km: OOBE of 70 + 10 log P – 20 log (D_{km}/1.5) at 3 MHz from the channel edge
    - When co-located, limit the undesired signal level at the ATC base station receiver to no more than -108 dBm/5 MHz (scaled to the appropriate bandwidth)