Appendix 1 References

A1-1 "ATSC Digital Television Standard, Parts 1 - 6, 2007", Document A/53, Part 2 2007, January 3, 2007, www.atsc.org.

A1-2 FCC rules, CFR 47, Subpart E, Section 73.601 – 73.699.

A1-3 "Interference Analysis of Co-Sited DTV and NTSC Translators", Gary Sgrignoli, IEEE Transactions of Co-Sited DTV and NTSC Translators, Vol. 51, No. 1, March 2005.

A1-4 "A/110B: Synchronization Standard for Distributed Transmission, Revision B," ATSC Standard, December 24, 2007, www.atsc.org.

A1-5 "A/111: ATSC Recommended Practice: Design of Synchronized Multiple Transmitter Networks", ATSC Recommended Practice, September 3, 2004, www.atsc.org.

A1-6 "Distributed Transmission Systems — Overcoming the Limitations of DTV Transmission", S. Merrill Weiss, NAB 2003, April 2003.

A1-7 "The ATSC Distributed Transmission System and Applications to Translator Services," David L. Hershberger, NAB 2003 Broadcast Engineering Conference Proceedings, April 2003.

A1-8 "Receiver Performance Guidelines, with Corrigendum No. 1 and Amendment No. 1", ATSC Recommended Practice A/74, November 29, 2007, www.atsc.org.

A1-9 "Transmission Measurement and Compliance for Digital Television, Rev. A", Document A/64A, May 30, 2000, www.atsc.org.

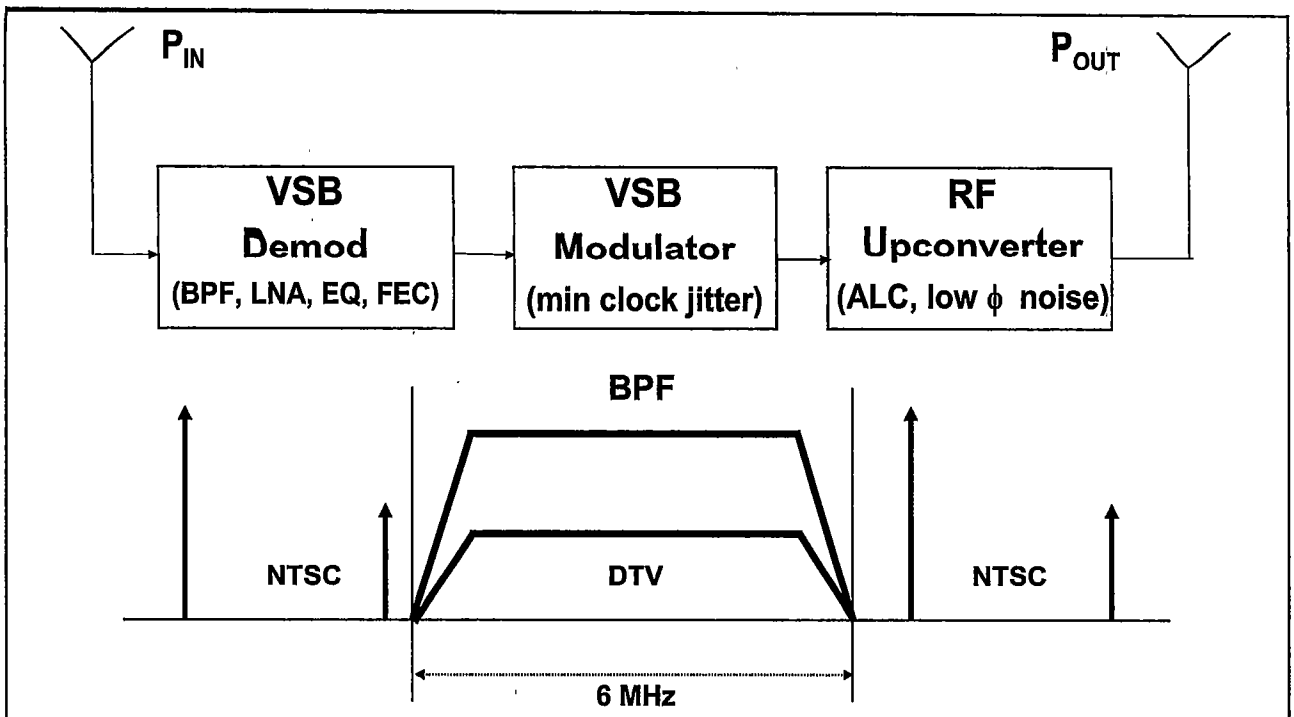

Figure A1-1 Translator block diagram

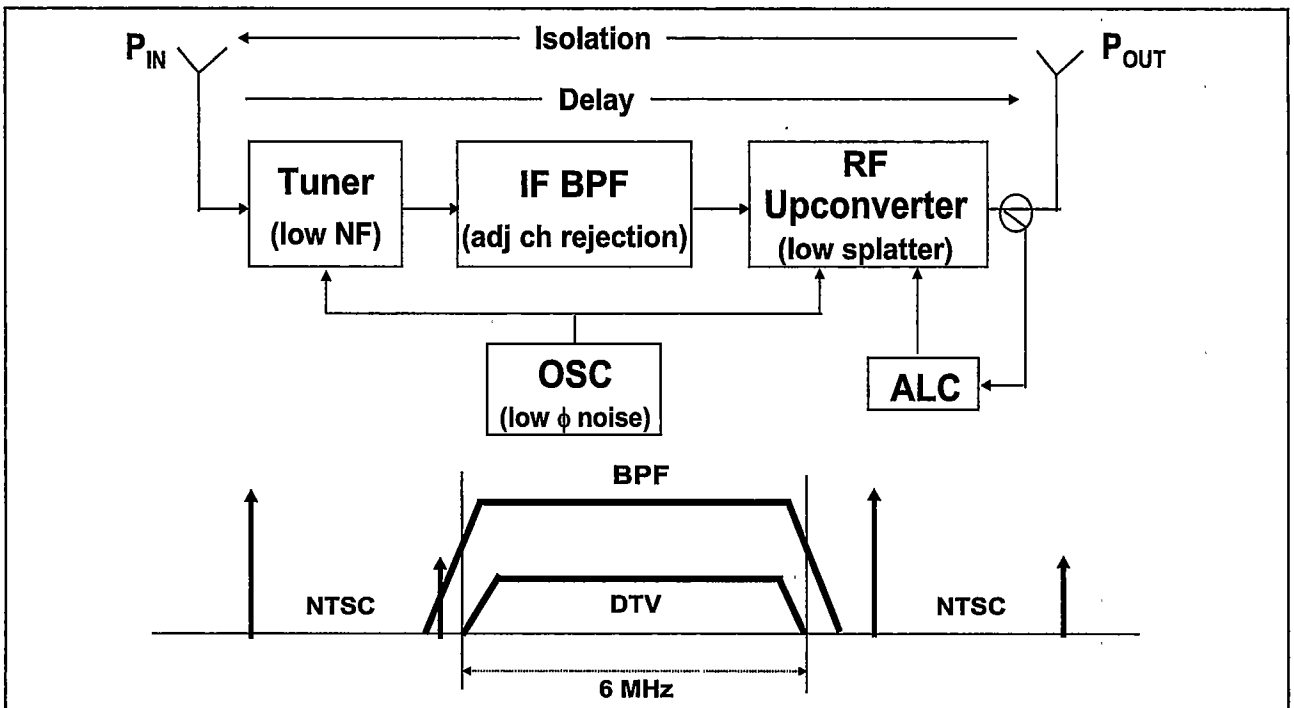

Figure A1-2 On-channel repeater block diagram

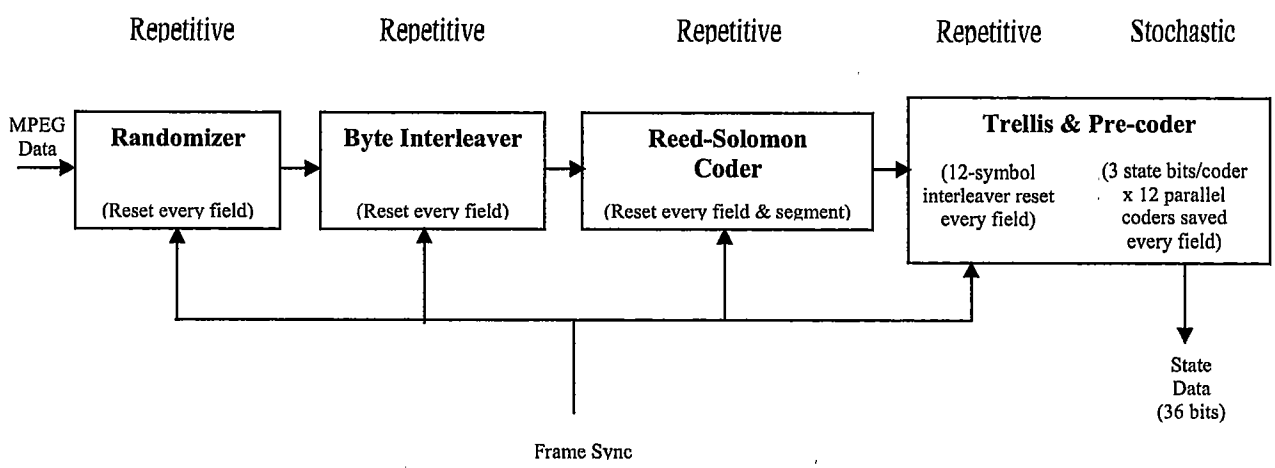

Figure A1-3 Generic VSB *Data* Processing Methodology (as defined in ATSC A/53/E)

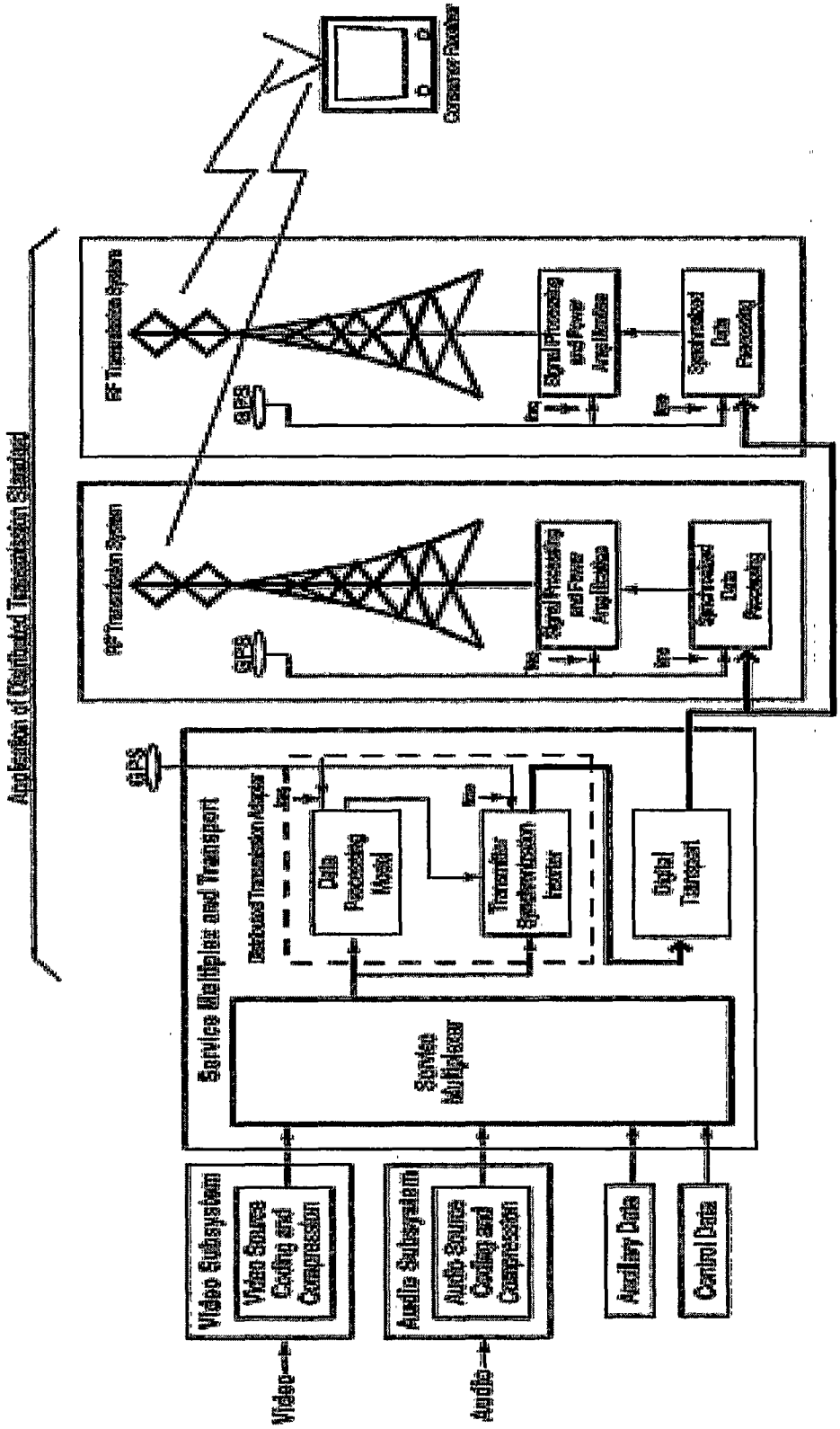

Figure A1-4a Synchronized distributed *transmission* system block diagram **(from A/110B Standard document)**

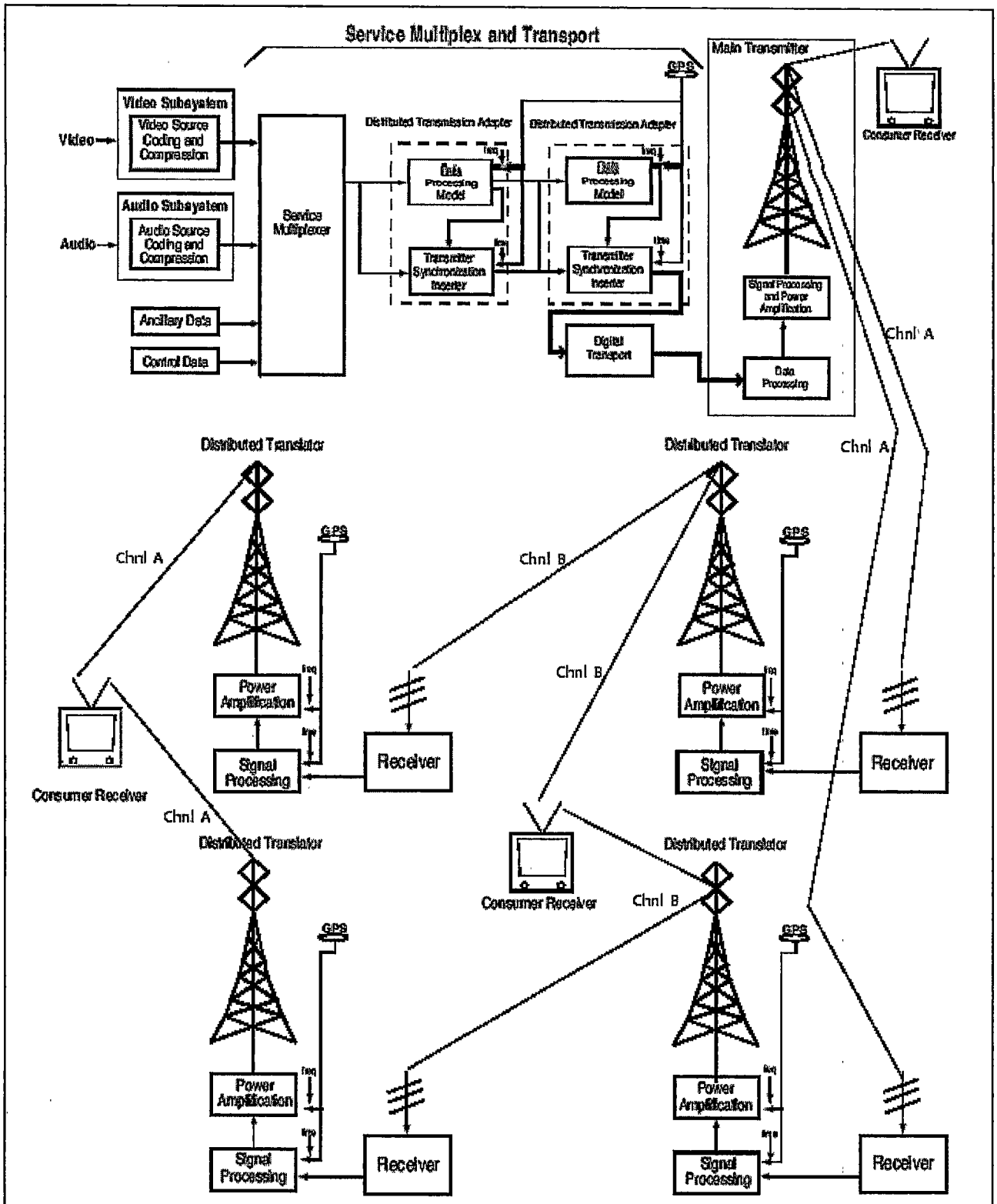

Figure A1-4b Synchronized *translator* system block diagram **(from A/110B Standard document)**

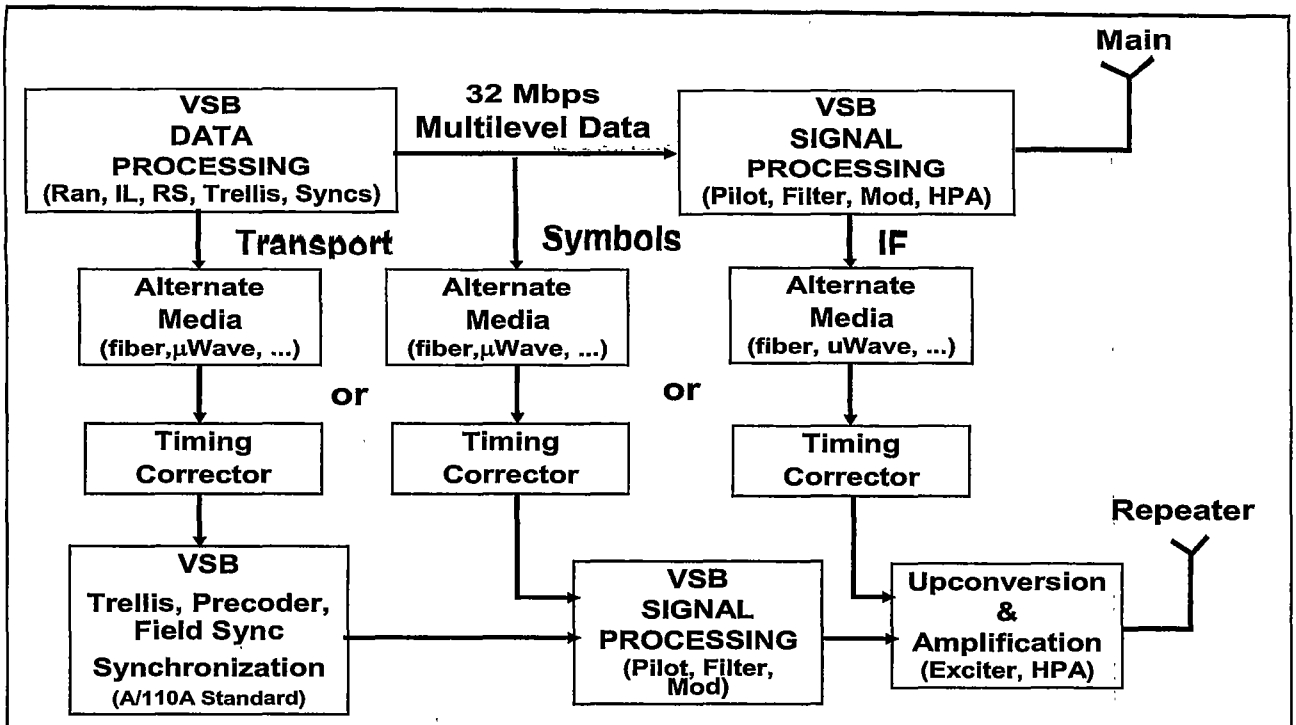

Figure A1-5 Alternate DTS Synchronization Methods

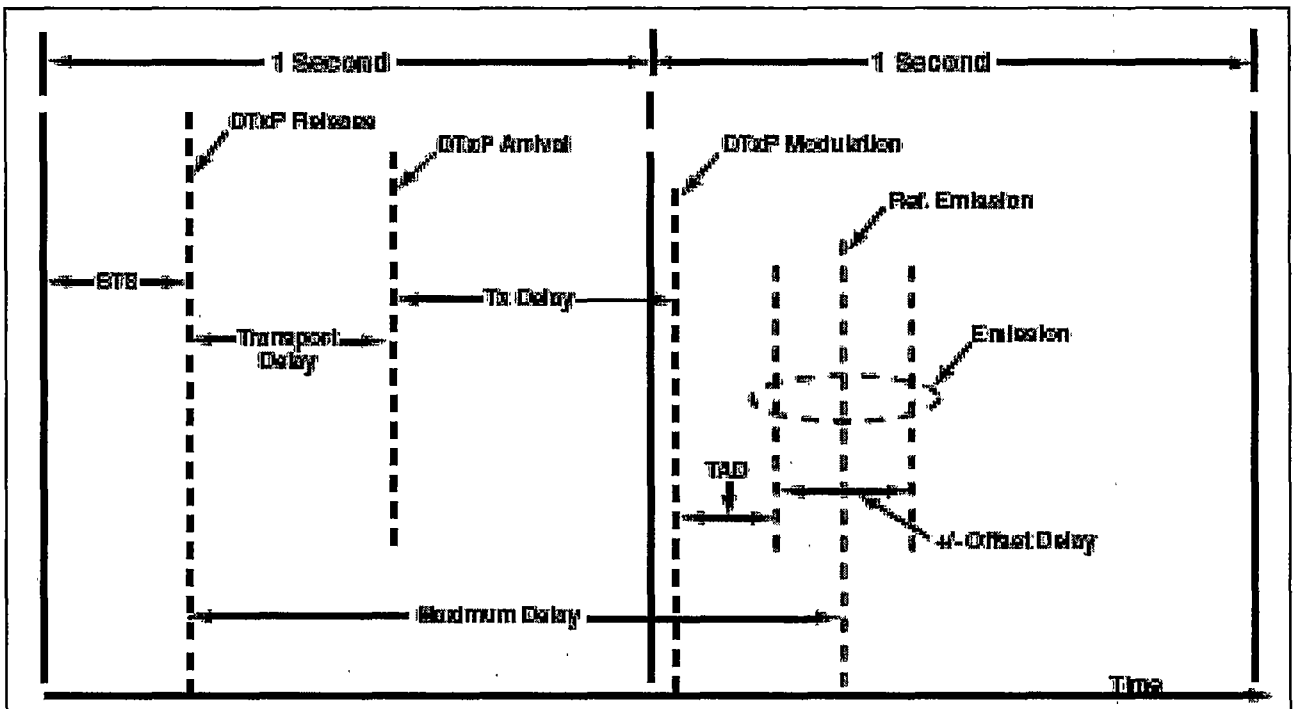

Figure A1-6 DTS Transmitter Timing Control Relationship (from A/110B Standard document)

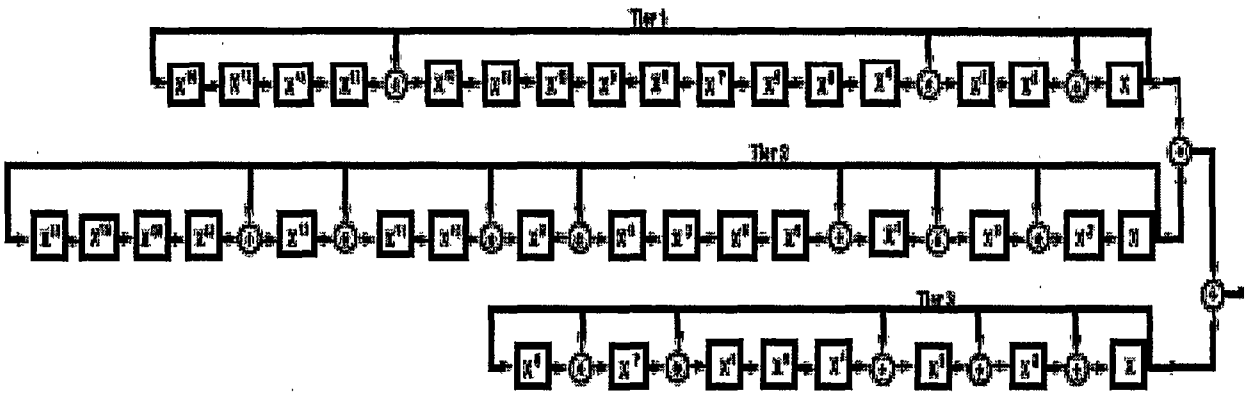

Figure A1-7 Kasami code sequence generator for RF watermarking (from ATSC A/110B Standard document)

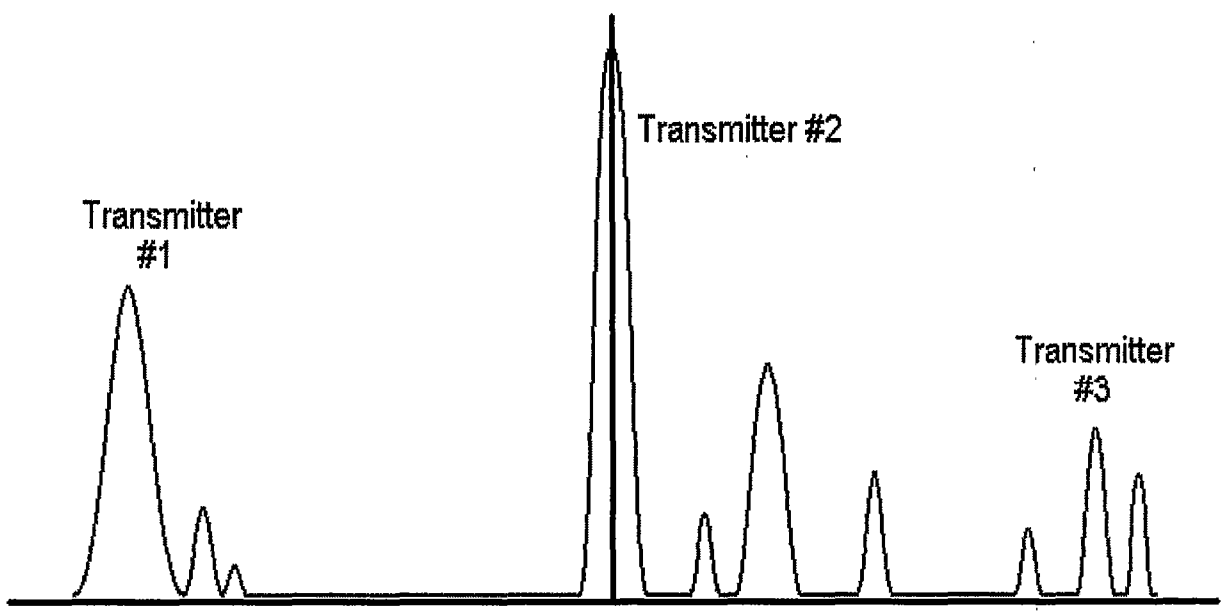

Figure A1-8 RF Watermark Test Equipment Display Example (from Ref 6)

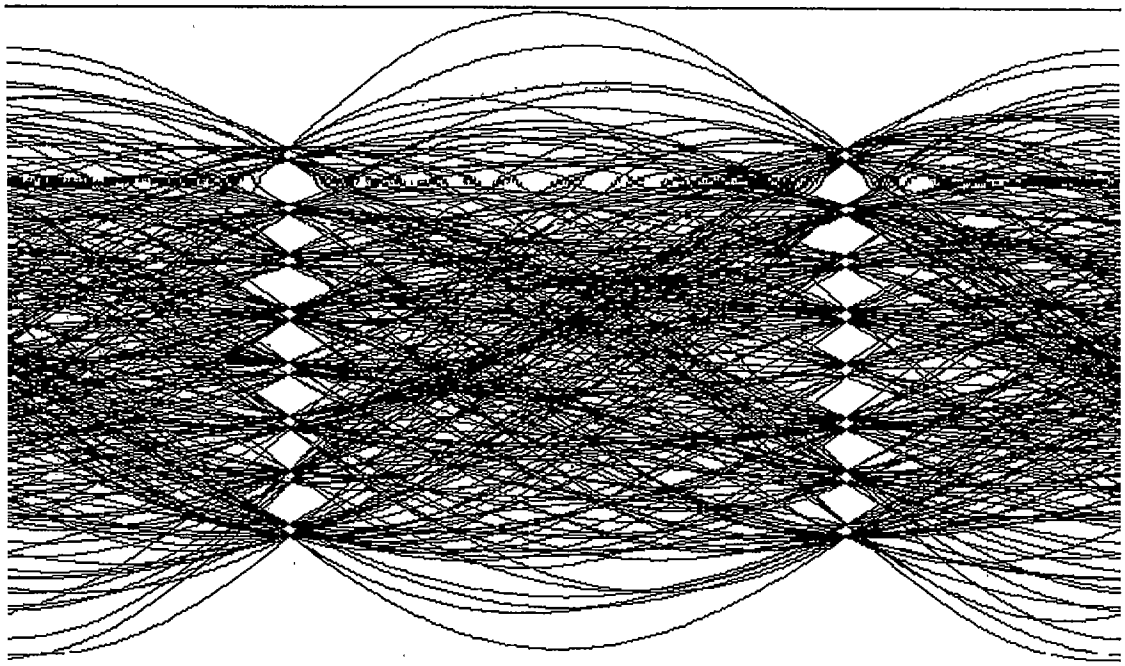

Figure A1-9 Software Simulation of Data Eyes with RF Watermark Signal Present @ -27 dB (from Ref 6)

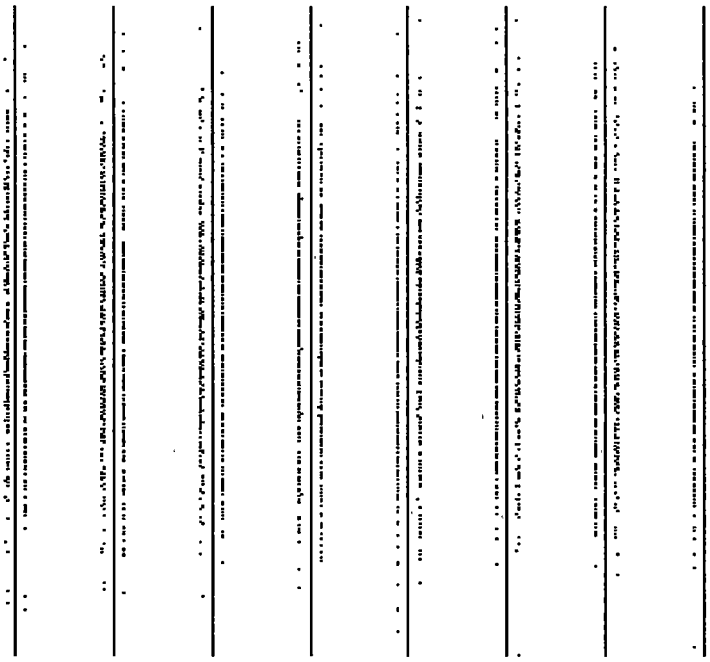

Figure A1-10 Software Simulation of Data Constellation with RF Watermark Signal Present @ -27 dB (from Ref 6)

APPENDIX 2 KASAMI CODE SEED ASIGNMENTS

This appendix describes Kasami codes for the RF Watermark Transmitter Identification (**TxID**) signals that were transmitted from the DTx transmitters during the MTVA Distributed Transmission test. Measurements using the RF Watermark method require *individual* identifiers to be uniquely assigned to each of the transmitters in the network. The required assignments utilized in the MTVA field test are given in **Table A2-1** below.

To implement the measurement regime using the Kasami code sequences specified in the A/110B standard, the values listed in the table were installed in the following locations:

Network ID	DTxA Network Identifier of 2165 (in DXP.INI file, Network section of the TxID control software)
Tx #	Transmitter Identifier (on Slave screen of corresponding Axciter)
Tier Binary Values	Kasami Seed (in Kasami window of TxID Analyzer software)

Table A2-1 Kasami Code Sequence Value Assignments

CH #	Tx Site	Network ID	Tx #	Binary Code		
				Tier 1	Tier 2	Tier 3
12	BD1	2165	1	0000000000000001	0000000000011000	01110101
	BD2	2165	2	0000000000000001	0000000000101000	01110101
	BD3	2165	3	0000000000000001	0000000000111000	01110101
	BD4	2165	4	0000000000000001	0000000001001000	01110101
	ESB	2165	5	0000000000000001	0000000001011000	01110101
33	BD1	2165	6	0000000000000001	0000000001101000	01110101
	BD2	2165	7	0000000000000001	0000000001111000	01110101
	BD3	2165	8	0000000000000001	0000000010001000	01110101
	BD4	2165	9	0000000000000001	0000000010011000	01110101
	ESB	2165	10	0000000000000001	0000000010101000	01110101
65	BD1	2165	11	0000000000000001	0000000010111000	01110101
	BD2	2165	12	0000000000000001	0000000011001000	01110101
	BD3	2165	13	0000000000000001	0000000011011000	01110101
	BD4	2165	14	0000000000000001	0000000011101000	01110101

Note that:

Tier 1 was always 0001hex.

Tier 2 contains the 12-bit unique TxID code (bits b4 – b15) that was a number from 1 to 14 in the MTVA field test, and part of the network ID (bits b0 – b3) that was 8hex in the MTVA field test.

Tier 3 contains the network ID (bits 1-8) that was 75hex in the MTVA field test.

APPENDIX 3 FIELD TEST SITES

This appendix describes the **132** *actual* outdoor and indoor field test sites (i.e., grid, interference, driveway, and indoor) in the Brooklyn area that were visited by the MTVA DTS field test crews. Of these **132** test sites, **109** were outdoor test sites, with the remaining **23** indoor test sites (**10** of which were "inside the box"). A full-scale view of these test sites is illustrated in **Figure A3-1**, while an expanded view is shown in **Figure A3-2**. The four **BLUE DOTS** (labeled Site #1 through Site #4) represent the four remote low-power DTS transmitter sites. The **RED FLAGS** indicate the "inside the box" Grid test sites (denoted either as "G1-xx" in the tabular data). The **GREEN STARS** represent the driveway test sites (denoted as "HD-xx") that are co-sited with the indoor test sites (denoted as "HI"). Finally, the **RED Xs** are the "outside the box" interference test sites (denoted as either "IX-xx" for interference sites). Note that driveway and indoor sites, while desired to only be "inside the box", actually were located *both* "inside the box" and "outside the box" due to the availability of indoor test volunteers.

Table A3-1 contains the following information:

Site Number

Latitude & longitude

Bearing & Distance to *each* DTx transmitter

All Grid sites and HD sites with asterisks were "inside the "box" (as defined by the four Brooklyn DTx transmitters)

Note that in **Table A3-1** the indoor site (**HI**) location descriptions are always co-sited with the driveway locations (**HD**).

Table A3-2 contains the specific details regarding the indoor sites, such as room description, window locations, height (AGL), etc.

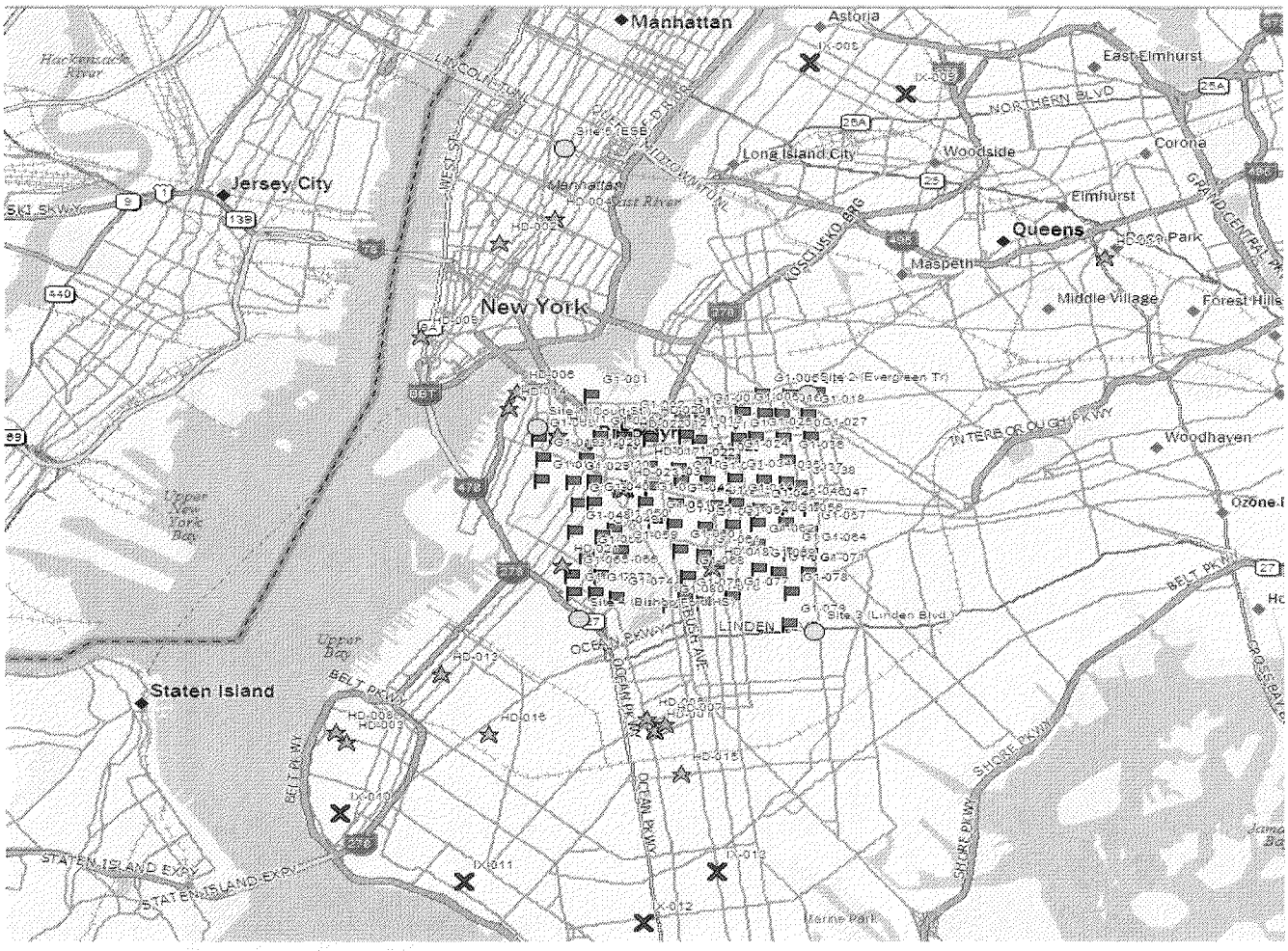

Figure A3-1 Full scale map of all visited remote field test sites (outdoor and indoor). **Blue dots** are DTx transmitters, **red flags** are sites "inside the box, **Red X** marks are interference sites, and **green stars** are indoor and driveway sites.

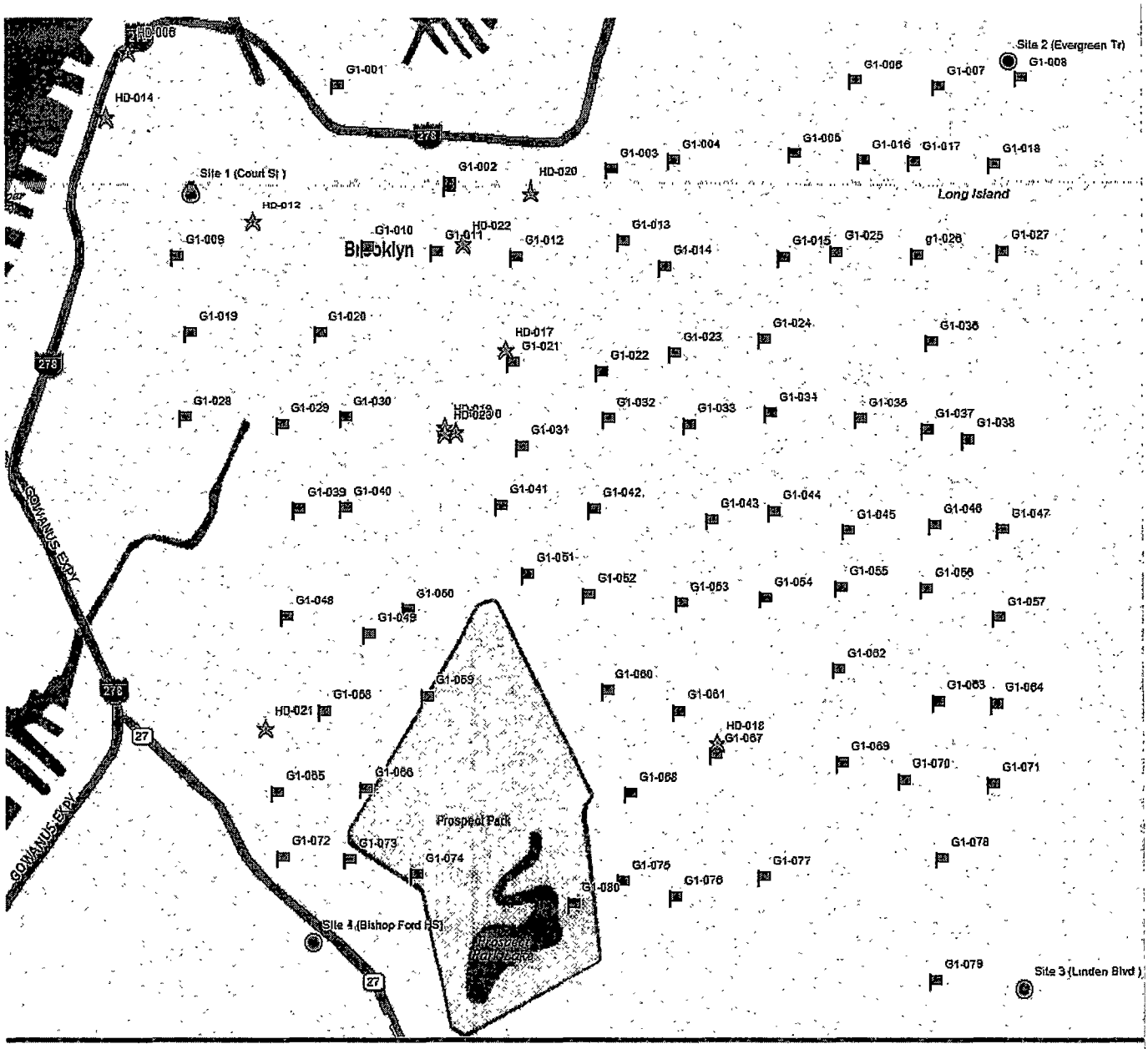

Figure A3-2 Expanded scale map of visited Brooklyn remote field test sites (outdoor and indoor). **Blue dots** are DTx transmitters, **red flags** are sites "inside the box, and **green stars** are indoor and driveway sites.

Table A3-1 MTVA DTx ***Outdoor*** Field Test Site Locations

Test Info		Site Info		Latitude			Longitude			ESB Tx		Tx A		Tx B		Tx C		Tx D		"Box"
Test #	Test Date	Site Name	Site Type	Lat (deg)	Lat (min)	Lat (sec)	Long (deg)	Long (min)	Long (sec)	Distance (miles)	Bearing (deg)	Distance (miles)	Bearing (deg)	Distance (miles)	Bearing (deg)	Distance (miles)	Bearing (deg)	Distance (miles)	Bearing (deg)	In/ Out
A1	1/15/08	G1	078	40	39	34	73	56	16	6.6	338	3.7	310	2.8	6	0.5	142	2.4	264	In
A2	1/16/08	G1	001	40	41	53	73	58	51	3.5	355	0.6	240	2.5	87	4.0	140	2.9	182	In
A3	1/17/08	G1	017	40	41	40	73	56	23	4.5	327	2.7	269	0.5	44	2.9	171	3.5	220	In
A4	1/18/08	G1	070	40	39	48	73	56	26	6.3	338	3.4	308	2.6	9	0.8	145	2.3	257	In
A5	1/21/08	G1	023	40	41	5	73	57	25	4.7	341	1.9	289	1.7	50	2.5	148	2.4	214	In
A6	1/22/08	G1	043	40	40	35	73	57	15	5.3	341	2.3	301	2.0	35	2.0	143	2.1	226	In
A7	1/23/08	IX	012	40	35	48	73	58	8	10.5	355	6.8	350	7.4	15	4.4	27	4.2	350	Out
A8	1/24/08	G1	050	40	40	19	73	58	33	5.3	354	1.7	331	3.0	50	2.7	119	1.2	197	In
A9	1/25/08	G1	063	40	40	2	73	56	17	6.1	336	3.3	303	2.3	7	1.0	161	2.5	251	In
A10	1/28/08	G1	009	40	41	22	73	59	32	4.1	4	0.3	9	3.2	77	4.0	128	2.4	167	In
A11	1/29/08	G1	020	40	41	8	73	58	56	4.4	357	0.7	319	2.8	69	3.5	130	2.1	181	In
A12	1/30/08	G1	066	40	39	47	73	58	44	5.9	356	2.2	343	3.5	43	2.6	105	0.5	201	In
A13	1/31/08	G1	049	40	40	14	73	58	44	5.4	356	1.7	337	3.2	50	2.8	116	1.0	190	In
A14	2/1/08	G1	069	40	39	51	73	56	42	6.2	340	3.2	310	2.5	15	1.0	137	2.1	253	In
A15	2/4/08	G1	003	40	41	37	73	57	41	4.0	341	1.6	270	1.6	1	3.2	151	2.8	203	In
A16	2/5/08	G1	014	40	41	19	73	57	27	4.4	340	1.8	281	1.5	59	2.8	151	2.6	210	In
A17	2/6/08	G1	011	40	41	23	73	58	26	4.1	351	1.0	286	2.3	72	3.4	139	2.4	191	In
A18	2/7/08	G1	015	40	41	22	73	56	56	4.5	334	2.2	277	1.1	50	2.7	160	2.9	217	In
A19	2/8/08	G1	047	40	40	33	73	56	2	5.7	331	3.3	292	1.7	2	1.6	176	2.9	241	In
A20	2/11/08	G1	028	40	40	53	73	59	30	4.6	4	0.8	2	3.4	1	3.7	122	1.8	164	In
A21	2/12/08	G1	052	40	40	22	73	57	47	5.4	347	2.1	314	2.5	40	2.1	129	1.6	221	In
A22	2/14/08	G1	058	40	40	0	73	58	56	5.6	358	1.9	345	3.5	49	2.8	109	0.8	181	In
A23	2/15/08	G1	057	40	40	17	73	56	4	6.0	333	3.3	297	1.9	3	1.3	173	2.8	246	In
A24	2/18/08	IX	010	40	37	4	74	2	1	9.4	15	5.7	23	7.8	43	5.9	65	3.8	46	Out
A25	2/19/08	G1	022	40	41	1	73	57	44	4.7	344	1.7	294	1.9	54	2.6	143	2.2	209	In
A26	2/20/08	G1	026	40	41	22	73	56	22	4.7	331	2.6	276	0.9	35	2.6	167	3.1	222	In
A27	2/21/08	IX	009	40	45	32	73	54	43	4.0	259	6.1	223	4.2	195	7.4	188	8.0	207	Out
A28	2/25/08	G1	072	40	39	34	73	59	6	6.2	359	2.4	352	3.9	44	2.8	98	0.3	151	In
A29	2/26/08	G1	032	40	40	53	73	57	42	4.8	344	1.8	298	2.0	50	2.5	141	2.1	212	In
A30	2/29/08	G1	038	40	40	49	73	56	10	5.4	331	3.0	287	1.4	8	1.9	173	3.0	235	In
A31	3/3/08	G1	039	40	40	38	73	59	1	4.9	359	1.2	340	3.1	60	3.2	121	1.5	177	In
A32	3/5/08	G1	076	40	39	28	73	57	26	6.5	346	3.1	324	3.2	24	1.4	102	1.3	265	In
A33	3/6/08	G1	061	40	40	1	73	57	25	5.8	345	2.6	316	2.6	29	1.6	125	1.5	240	In
A34	3/11/08	G1	055	40	40	22	73	56	42	5.7	338	2.8	301	2.0	19	1.5	152	2.3	239	In
A35	3/12/08	G1	062	40	40	8	73	56	44	5.9	339	3.0	305	2.3	17	1.3	145	2.1	245	In
A36	3/13/08	G1	041	40	40	37	73	58	10	5.0	350	1.5	315	2.5	51	2.6	129	1.6	205	In
A37	3/14/08	G1	008	40	41	55	73	55	56	4.5	321	3.1	264	0.1	346	3.1	179	4.0	222	In

Note 1: **G1** denotes Grid test sites; **IX** denotes Interference test sites; **HD** denotes Driveway test sites (which are the *same* as indoor test sites)

Table A3-1 (cont) MTVA DTx ***Outdoor*** Field Test Site Locations

Test Info		Site Info		Latitude Info			Longitude Info			ESB Tx		Tx A		Tx B		Tx C		Tx D		"Box"
Test #	Test Date	Site Name	Site Type	Lat (deg)	Lat (min)	Lat (sec)	Long (deg)	Long (min)	Long (sec)	Distance (miles)	Bearing (deg)	Distance (miles)	Bearing (deg)	Distance (miles)	Bearing (deg)	Distance (miles)	Bearing (deg)	Distance (miles)	Bearing (deg)	In/ Out
A38	3/17/08	G1	016	40	41	39	73	56	37	4.4	329	2.5	269	0.7	56	2.9	168	3.4	217	In
A39	4/21/08	G1	005	40	41	41	73	56	54	4.2	332	2.3	268	0.9	66	3.0	163	3.2	214	In
A40	4/22/08	G1	029	40	40	52	73	59	5	4.7	359	0.9	338	3.0	65	3.4	124	1.8	176	In
B1	4/21/08	G1	079	40	39	12	73	56	17	7.0	339	3.9	315	3.2	5	0.4	89	2.3	274	In
B2	1/16/08	G1	002	40	41	35	73	58	21	3.9	349	1.0	271	2.1	74	3.5	142	2.6	191	In
B3	1/17/08	G1	018	40	41	39	73	56	3	4.6	324	3.0	269	0.4	12	2.8	177	3.7	224	In
B4	1/18/08	G1	071	40	39	48	73	56	0	6.5	335	3.7	305	2.5	1	0.7	172	2.6	259	In
B5	1/21/08	G1	024	40	41	7	73	57	2	4.7	337	2.2	285	1.4	43	2.4	156	2.6	219	In
B6	1/22/08	G1	044	40	40	36	73	56	60	5.3	339	2.5	298	1.8	29	1.8	149	2.2	230	In
B7	1/23/08	IX	013	40	36	23	73	57	11	10.0	350	6.4	342	6.5	9	3.4	19	3.8	336	Out
B8	1/24/08	G1	051	40	40	25	73	58	2	5.3	349	1.9	317	2.6	45	2.3	127	1.5	213	In
B9	1/25/08	G1	064	40	40	2	73	56	2	6.2	334	3.5	301	2.3	2	1.0	172	2.7	253	In
B10	1/28/08	G1	010	40	41	24	73	58	43	4.1	355	0.7	291	2.5	74	3.5	136	2.4	185	In
B11	1/29/08	G1	019	40	41	9	73	59	29	4.3	4	0.0	1	3.2	72	3.8	126	2.1	168	In
B12	1/30/08	G1	065	40	39	46	73	59	7	5.9	0	2.2	351	3.8	47	2.9	103	0.5	164	In
B13	1/31/08	G1	048	40	40	17	73	59	4	5.3	359	1.6	347	3.4	54	3.0	114	1.1	174	In
B14	2/1/08	G1	068	40	39	45	73	57	36	6.1	347	2.7	322	2.9	29	1.6	113	1.3	248	In
B15	2/4/08	G1	004	40	41	40	73	57	25	4.0	338	1.8	268	1.3	74	3.1	155	3.0	207	In
B16	2/5/08	G1	013	40	41	25	73	57	38	4.2	342	1.6	278	1.6	66	3.0	149	2.7	206	In
B17	2/6/08	G1	012	40	41	22	73	58	5	4.2	347	1.3	283	2.0	69	3.2	142	2.4	198	In
B18	2/7/08	G1	025	40	41	23	73	56	43	4.6	332	2.4	276	1.0	43	2.6	164	3.1	220	In
B19	2/8/08	G1	046	40	40	34	73	56	18	5.6	333	3.0	293	1.7	10	1.6	167	2.7	239	In
B20	2/11/08	G1	030	40	40	53	73	58	49	4.6	356	1.0	325	2.8	63	3.2	127	1.8	183	In
B21	2/12/08	G1	053	40	40	20	73	57	23	5.5	343	2.4	309	2.3	33	1.8	135	1.8	230	In
B22	2/14/08	G1	059	40	40	3	73	58	28	5.6	354	2.0	334	3.1	45	2.5	114	0.9	207	In
B23	2/15/08	G1	056	40	40	23	73	56	20	5.8	335	3.1	297	1.9	10	1.4	164	2.6	242	In
B24	2/18/08	IX	011	40	36	16	74	0	25	10.0	6	6.2	8	7.7	31	5.2	49	3.8	20	Out
B25	2/19/08	G1	021	40	41	3	73	58	6	4.5	348	1.4	298	2.2	60	2.9	138	2.1	201	In
B26	2/20/08	G1	027	40	41	23	73	56	1	4.9	326	3.0	275	0.7	3	2.5	178	3.5	228	In
B27	2/21/08	IX	008	40	45	53	73	55	57	3.0	248	5.8	212	4.5	180	7.7	180	8.0	199	Out
B28	2/25/08	G1	073	40	39	34	73	58	48	6.2	357	2.4	346	3.7	42	2.6	99	0.3	206	In
B29	2/26/08	G1	033	40	40	52	73	57	21	5.0	342	2.1	97	1.8	42	2.3	145	2.2	219	In
B30	2/27/08	G1	074	40	39	31	73	58	31	6.2	355	2.6	341	3.6	38	2.3	99	0.4	243	In
B31	2/28/08	G1	075	40	39	30	73	57	38	6.4	348	2.9	327	3.2	27	1.6	103	1.2	261	In
B32	2/29/08	G1	037	40	40	51	73	56	20	5.3	332	2.9	288	1.4	14	1.9	168	2.9	233	In
B33	3/3/08	G1	040	40	40	37	73	58	49	5.0	356	1.3	333	3.0	58	3.0	123	1.5	185	In
B34	3/4/08	G1	067	40	39	54	73	57	14	6.0	344	2.8	315	2.7	25	1.4	124	1.6	247	In

Note 1: **G1** denotes Grid test sites; **IX** denotes Interference test sites; **HD** denotes Driveway test sites (which are the *same* as indoor test sites)

Table A3-1 (cont) MTVA DTx ***Outdoor*** Field Test Site Locations

Test Info		Site Info		Latitude			Longitude			ESB Tx		Tx A		Tx B		Tx C		Tx D		"Box"
Test #	Test Date	Site Name	Site Type	Lat (deg)	Lat (min)	Lat (sec)	Long (deg)	Long (min)	Long (sec)	Distance (miles)	Bearing (deg)	Distance (miles)	Bearing (deg)	Distance (miles)	Bearing (deg)	Distance (miles)	Bearing (deg)	Distance (miles)	Bearing (deg)	In/ Out
B35	3/5/08	G1	077	40	39	31	73	57	1	6.5	343	3.2	318	3.0	18	1.1	110	1.7	264	In
B36	3/6/08	G1	060	40	40	4	73	57	42	5.7	347	2.4	319	2.7	34	1.9	122	1.4	233	In
B37	3/7/08	G1	036	40	41	7	73	56	19	5.0	330	2.8	281	1.0	17	2.3	170	3.1	228	In
B38	3/10/08	G1	042	40	40	37	73	57	45	5.1	346	1.9	307	2.2	45	2.3	135	1.8	216	In
B39	3/11/08	G1	054	40	40	21	73	57	2	5.6	340	2.6	304	2.1	26	1.6	143	2.0	235	In
B40	3/12/08	G1	045	40	40	33	73	56	40	5.5	337	2.7	296	1.8	21	1.7	156	2.4	235	In
B41	3/13/08	G1	031	40	40	48	73	58	4	4.8	348	1.6	307	2.3	54	2.7	134	1.9	204	In
B42	3/14/08	G1	007	40	41	53	73	56	17	4.3	324	2.8	264	0.3	65	3.1	174	3.7	219	In
B43	3/17/08	G1	006	40	41	55	73	56	38	4.1	327	2.5	262	0.6	82	3.2	168	3.6	214	In
B44	3/18/08	HD	001	40	38	2	73	57	57	8.0	352	4.3	342	4.9	21	2.3	53	1.7	330	Out
B45	3/19/08	HD	002	40	43	46	73	59	56	1.5	27	2.5	171	4.0	120	6.3	146	5.2	171	Out
B46	3/20/08	HD	003	40	37	55	74	1	55	8.4	17	4.8	26	7.0	48	5.5	74	3.1	57	Out
B47	3/21/08	HD	004	40	44	3	73	59	13	1.0	3	2.8	185	3.7	130	6.3	153	5.4	177	Out
B48	3/24/08	HD	005	40	38	11	73	58	3	7.8	353	4.1	342	4.7	23	2.2	58	1.6	330	Out
B49	3/25/08	HD	006	40	42	1	73	59	43	3.4	8	0.5	157	3.3	91	4.7	134	3.2	168	In
B50	3/26/08	HD	007	40	38	7	73	57	48	7.9	351	4.3	340	4.7	20	2.1	53	1.7	325	Out
B51	3/27/08	HD	008	40	38	1	74	2	3	8.3	18	4.7	28	7.0	49	5.6	76	3.1	61	Out
B52	3/28/08	HD	009	40	42	39	74	0	56	3.0	31	1.7	133	4.4	100	5.9	132	4.2	155	Out
B53	3/31/08	HD	010	40	40	52	73	58	19	4.7	351	1.3	310	2.4	58	2.9	132	1.8	198	In
B54	4/1/08	HD	011	40	43	35	73	52	7	6.4	284	6.8	251	3.8	241	6.1	213	7.7	231	Out
B55	4/2/08	HD	012	40	41	30	73	59	11	3.9	0	0.3	294	2.9	79	3.9	133	2.5	175	In
B56	4/3/08	HD	013	40	38	42	74	0	42	7.3	11	3.5	18	5.6	47	4.2	82	1.7	64	In
B57	4/4/08	G1	035	40	40	53	73	56	37	5.1	334	2.6	288	1.4	24	2.1	162	2.7	229	In
B58	4/22/08	G1	034	40	40	54	73	57	0	5.0	338	2.3	291	1.5	36	2.2	154	2.5	224	In
B59	4/23/08	HD	014	40	41	49.0	73	59	49.0	3.6	9	0.4	127	3.4	87	4.6	131	2.9	165	Out
B60	4/28/08	G1	080	40	39	26.0	73	57	50.0	6.4	350	2.9	330	3.4	29	1.7	99	1.0	265	In
B61	4/29/08	HD	015	40	37	41.0	73	57	36.0	8.4	351	4.8	340	5.2	16	2.3	40	2.3	329	Out
B62	4/30/08	HD	016	40	38	0.0	74	0	5.0	8.0	6	4.2	7	5.8	38	3.9	69	1.8	33	Out
B63	5/1/08	HD	017	40	41	7.0	73	58	6.0	4.5	348	1.3	295	2.1	62	2.9	139	2.2	200	In
B64	5/2/08	HD	018	40	39	56.0	73	57	12.0	6.0	343	2.8	314	2.6	25	1.4	126	1.7	246	In
B65	5/5/08	HD	019	40	40	53	73	58	22	4.7	351	1.3	311	2.5	59	2.9	132	1.8	196	In
B66	5/6/08	HD	020	40	41	36	73	58	0	3.9	345	1.3	270	1.8	76	3.3	146	2.7	198	In
B67	5/7/08	HD	021	40	39	59	73	59	7	5.7	0	1.9	350	3.6	50	3.0	108	0.8	169	In
B68	5/8/08	HD	022	40	41	26	73	58	17	4.1	349	1.1	281	2.1	73	3.3	141	2.5	193	In
B69	5/9/08	HD	023	40	40	52	73	58	22	4.7	351	1.3	311	2.5	59	2.9	132	1.8	196	In

Note 1: **G1** denotes Grid test sites; **IX** denotes Interference test sites; **HD** denotes Driveway test sites (which are the *same* as indoor test sites)

Table A3-2 MTVA DTx ***Indoor*** Test Site Descriptions

Test #	Test Date	Site Type	Site #	Room Location Floor #	Room Location Within Bldg	Room Location Height AGL	# Of Windows	Window Directions	Name Of Room	Building Structure & Material	"Box" In/ Out
IN-1	3/18/08	HI	001	6	Ext	60	2 Double	N, E	Living	Brick	Out
IN-2	3/19/08	HI	002	2	Ext	20	1 + French door	W	Living	Concrete	Out
IN-3	3/20/08	HI	003	1	Ext	10	19 individual	N,S,W	Sun	Stucco	Out
IN-4	3/21/08	HI	004	2	Ext	20	2	S	Living	Brick	Out
IN-5	3/24/08	HI	005	1	Ext	10	3	NE	Living	Wood	Out
IN-6	3/25/08	HI	006	4	Ext	40	2	NE	Living	Brick	In
IN-7	3/26/08	HI	007	2	Ext	20	1	N	Living	Concrete	Out
IN-8	3/27/08	HI	008	1	Ext	5	4	N	Living	Brick	Out
IN-9	3/28/08	HI	009	4	Ext	40	3	S	Living	Brick	Out
IN-10	3/31/08	HI	010	4	Ext	40	4	N	Loft	Plaster	In
IN-11	4/1/08	HI	011	1	Ext	10	11	E,N,W	Living	Brick	Out
IN-12	4/2/08	HI	012	4	Ext	40	2	W	Kitchenette	Brick	In
IN-13	4/3/08	HI	013	1	Ext	15	2	SW	Kitchenette	Brown Stone	Out
IN-14	4/23/08	HI	014	0	Ext	0	3	W	Living	Brick	Out
IN-15	4/29/08	HI	015	2	Ext	20	2	N	Living	Brick	Out
IN-16	4/30/08	HI	016	2	Ext	15	5	S & W	Living	Brick	Out
IN-17	5/1/08	HI	017	3	Ext	40	2	W	Living	Brick	In
IN-18	5/2/08	HI	018	4	Ext	40	2	S	Living	Brick	In
IN-19	5/5/08	HI	019	3	Ext	40	1	N	Living	Brick	In
IN-20	5/6/08	HI	020	2	Ext	25	2	S	Living	Brick	In
IN-21	5/7/08	HI	021	1	Ext	6	4	N & S	Living	Brick	In
IN-22	5/8/08	HI	022	3	Ext	40	2	E	Living	Siding & Brick	In
IN-23	5/9/08	HI	023	2	Ext	20	2	S	Loft	Plaster	In

Note 1: Indoor ("**HI**") test site locations co-located with corresponding driveway ("**HD**") test site (e.g., HD-001 is co-located with HI-001)

APPENDIX 4 STEP-BY-STEP *OUTDOOR* FIELD TEST PROCEDURES

The detailed outdoor field test procedures consist of a *morning calibration* and the actual remote *field test*. A companion customized Excel spreadsheet (available upon request from MTVA) allowed data entry by the field engineer directly into the computer and also served as a script that provided the engineers with a list of "cues" to follow for consistent measurement procedures. This was especially important in light of the fact that there were two teams of field test personnel that worked in parallel for these field measurements. Coordination between the two teams was very crucial with regard to transmitter control (i.e., ON/OFF switching). Detailed comments were also required to be entered by the field engineers, which described what was being observed at each test site. These comments were an important addition to the numerical results.

MORNING CALIBRATION PROCEDURE

1) Start generator and truck engine
    a. Verify operation (voltages, currents, mast pressure, etc.)
    b. Verify that fuel levels for the truck and generator are sufficient for the day's work
    c. Check tire air pressure
2) Warm-up test equipment on route to first test site (minimum of 20 minutes)
3) Verify rotor and compass operation
4) Measure & record truck system *gain* (dB) using spectrum analyzer with tracking generator (i.e., downlead cable input to spectrum analyzer input)
5) Measure & record truck's attenuator accuracy (10-dB steps and 1-dB steps)
6) Measure & record truck's *noise* floor power (dBm/6 MHz), with input attenuator at maximum attenuation
7) Verify GPS, computer operation, and digital camera (set correct date and time), including backup USB memory device
8) Verify all test equipment operation (set correct date and time)
9) Verify general operation of DTV Receivers:
    a. Channel tuning of CH 12, CH 33, CH 65 (proper video and audio outputs)
    b. Dynamic range (high and low) of CH 12, CH 33, CH 65
10) Verify that all transmitter sites are operational and calibrated.

OUTDOOR FIELD TEST SITE MEASUREMENT PROCEDURE

1) <u>Arrive at field test site</u>
    a. Park vehicle in any available location as *close as practical* to proposed field test site
        i. Exact test location is randomly selected at each test site
    b. Perform safety checks
        i. Place parking cones around the truck
        ii. Carefully secure antenna to hydraulic mast
        iii. Check for overhead obstructions ***before*** raising mast
    c. Raise mast to 30' AGL with high-VHF/UHF directional log periodic antenna attached
    d. Perform quick *on-site* self-calibration (at every field test site)
        i. With input attenuator *temporarily* at maximum value, measure & record truck system noise floor (in dBm/6 MHz) on all three RF test channels, verifying that it is within proper tolerance from that measured during morning calibration. Record noise floor (dBm/6 MHz).
        ii. Verify that computer, test equipment, and camera has correct date and time
    e. Document test site

i. Record site number & name

ii. Record specific street address plus a general area description

iii. Record test date and time

iv. Record GPS latitude & longitude coordinates (in degrees, minutes, & seconds) of test site

v. Record *distance* from test site (in miles) to *each* DTS Tx as determined by GPS receiver

vi. Record *bearing* from test site (in degrees with respect to true North) to *each* DTS Tx as determined by GPS receiver

vii. Record basic description of weather (temperature, sunny, partly sunny, cloudy, rain, drizzle, fog, snow, windy, etc.)

viii. Record description of any *unusual* structures in nearby surrounding areas

ix. Document *outdoor* test site

1. Take digital pictures showing test site and truck, with mast extended
2. Note any significant obstructions (e.g., buildings, bridges, water towers, elevated train tracks, overpasses, etc.)

2) CH 33 Measurements

a. CH 33 coverage @ 30' AGL with **ESB alone**

i. Turn **OFF** all gap filler transmitters

ii. Adjust directional *outdoor* antenna direction for *maximum* total *average* signal power as measured on spectrum analyzer

iii. Document DTx system for *maximum* (peaked) signal level

1. Record antenna bearing (in degrees with respect to true North)
   a. Calculate & record difference between maximum signal antenna bearing and bearing to ESB
   b. Note if antenna is pointed in a direction that is *significantly* different (> 45 degrees) from bearing to ESB
2. Adjust input attenuator so that signal level is about –50 dBm/6 MHz at WIAD amplifier *output* or adjust attenuator to 0 dB if the largest available output signal is less than -50 dBm
3. Record attenuator setting (in dB)
4. Measure & record total *average* signal power (in dBm/6 MHz)
5. Calculate & record outdoor **FIELD STRENGTH** (in dBμV/m) using truck system gain, attenuator value, channel-dependent dipole factor, and channel-dependent antenna gain
6. Calculate & record **SNR** (in dB) of received signal using the measured signal level, input attenuator value, and truck's noise floor (anything less than 15 dB can *not* be received error free)
7. Record and save spectrum plot (20 MHz span, 10 dB/div, TIF)
   a. Note any significantly larger NTSC or ATSC signals within ±4.5 channels (i.e. within ±30 MHz of desired channels center frequency) that could possibly cause interference to the DTx signals
   b. Record levels of any of these signals that are greater than 20 dB above the desired DTV signal's total *average* power level (in 6 MHz)
   c. Record additional spectrum plot (60 MHz span, 10 dB/div, TIF), *if necessary*
8. Record & save RF Watermark data (RPT) for ESB signal
9. Measure & record ESB's *naturally* occurring multipath
   a. Document SDR value (in dB), which is total *integrated* energy in the channel impulse response *other* than main impulse energy

b. Note any significant large pre-echo and post-echo amplitudes and delays in the comments

10. Determine & record **SERVICE** for *each* DTV receiver
    a. Watch video for 3 minutes
    b. Count and record # of burst errors or "hits" (acceptable reception defined as ≤ 3 "hits" in 3 minutes)
        i. Enter total # of burst errors (0 – 18)
        ii. If partial picture viewable, but very bad (>18 errors), enter 555
        iii. If absolutely no picture viewable, enter 999
    c. Record *failure mode* code and enter comments about cause of failure in site comments.
        i. No failure (code 0)
        ii. Signal level (code 1)
        iii. Multipath, natural (code 2)
        iv. Multipath, DTx-induced (code 3)
        v. Interference (code 4)
        vi. Signal level and multipath (code 5)
        vii. Signal level and interference (code 6)
        viii. Multipath plus interference (code 7)
        ix. Other, with specific explanation in comments section (code 8)
11. Increase attenuation to lower signal down to threshold (**TOV**) for *each* DTV receiver, and document attenuator setting (in dB) for *each* DTV receiver, which is the reception **MARGIN** (in dB) relative to the truck's noise floor.
12. Return attenuator to original setting

iv. Document DTx system for antenna ***range of rotation*** (ease of consumer adjustment)

1. Set attenuator level, if possible, so that signal level around entire 360 degrees azimuth range falls between -30 dBm and -70 dBm, and record value
2. Slowly rotate directional *outdoor* antenna, recording angular sectors (in degrees) where DTV service exists
    a. Maximum of 6 sectors is considered (practical limitation due to time), with a sector requiring to be at least 30 degrees for consideration)
    b. More sectors than this, and adjustment is deemed unacceptable for typical consumer (make note in Comments section regarding sectors and total degrees)
3. At *each* antenna bearing *transition* from good to bad DTV reception or vice versa:
    a. Record antenna bearing (in degrees, with respect to true North)
    b. Record total *average* signal power (dBm/6 MHz)
    c. Calculate & record *outdoor* **FIELD STRENGTH** (in dBμV/m) using truck system gain, attenuator value, channel-dependent dipole factor, and channel-dependent antenna gain
    d. Calculate & record **SNR** (in dB) using the measured signal level, input attenuator value, and truck's noise floor (anything less than 15 dB can <u>not</u> possibly be received error free)
    e. Record and save spectrum data (20 MHz span, 10 dB/div, TIF)
    f. Record & save RF Watermark data (RPT) for ESB signal
    g. Measure & record ESB *naturally*-occurring multipath information
        i. Document **SDR** value (in dB), which is total energy in channel impulse response other than main impulse energy

ii. Note any significant large pre-echo and post-echo amplitudes and delays

h. Record *failure mode* code for *each* sector and enter comments about any *unique* causes of failure in site comments section for each failed sector.

i. No failure (code 0)

ii. Signal level (code 1)

iii. Multipath, natural (code 2)

iv. Multipath, DTx-induced (code 3)

v. Interference (code 4)

vi. Signal level and multipath (code 5)

vii. Signal level and interference (code 6)

viii. Multipath plus interference (code 7)

ix. Other, with specific explanation in comments section (code 8)

4. After rotating antenna through entire 360 degrees, record *total* degrees of reception (in degrees)

b. CH 33 coverage @ 30' AGL *with* **ESB** and **4 gap fillers ON**

i. Turn **ON** all gap filler transmitters

ii. Adjust directional *outdoor* antenna direction for *maximum* total *average* signal power as measured on spectrum analyzer

iii. Document DTx system with maximum (peaked) signal level

1. Record antenna bearing (in degrees with respect to true North)

a. Calculate & record difference between maximum signal antenna bearing and bearing to ESB

b. Note if antenna is pointed in a direction that is *significantly* different (> 45 degrees) from bearing to ESB

2. Adjust input attenuator so that signal level is about –50 dBm/6 MHz at WIAD amplifier *output* or adjust attenuator to 0 dB if the largest available output signal is less than -50 dBm

a. Note difference from attenuator setting between DTx active and DTx inactive

3. Record attenuator setting (in dB)

4. Measure & record total *average* signal power (in dBm/6 MHz)

5. Calculate & record outdoor **FIELD STRENGTH** (in dBμV/m) using truck system gain, attenuator value, channel-dependent dipole factor, and channel-dependent antenna gain

a. Note and record any difference between DTx active and DTx inactive

6. Calculate & record **SNR** (in dB) of received signal using the measured signal level, input attenuator value, and truck's noise floor (anything less than 15 dB can not be received error free)

7. Record and save spectrum plot (20 MHz span, 10 dB/div, TIF)

a. Note any significantly larger NTSC or ATSC signals within ±4.5 channels (i.e. within ±30 MHz of desired channels center frequency) that could possibly cause interference to the DTx signals

b. Record levels of any of these signals that are greater than 20 dB above the desired DTV signal's total average power level

c. Record additional spectrum plot (60 MHz span, 10 dB/div, TIF), *if necessary*

8. Record and save RF Watermark data (RPT) for all DTx signals

9. Measure & record DTx-induced multipath

a. Document echo amplitude values (in dB) & delay values(in µsecs) from all DTx transmitters

b. Note any significant large pre-echo and post-echo amplitudes and delays in the comments

10. Determine & record **SERVICE** for *each* DTV receiver

a. Watch video for 3 minutes

b. Count and record # of burst errors or "hits" (acceptable reception defined as ≤ 3 "hits" in 3 minutes)

i. Enter total # of burst errors (0 – 18)

ii. If partial picture viewable, but very bad (>18 errors), enter 555

iii. If absolutely no picture viewable, enter 999

c. Record *failure mode* code and enter comments about cause of failure in site comments.

i. No failure (code 0)

ii. Signal level (code 1)

iii. Multipath, natural (code 2)

iv. Multipath, DTx-induced (code 3)

v. Interference (code 4)

vi. Signal level and multipath (code 5)

vii. Signal level and interference (code 6)

viii. Multipath plus interference (code 7)

ix. Other, with specific explanation in comments section (code 8)

11. Increase attenuation to lower signal down to threshold (**TOV**) for *each* DTV receiver, and document attenuator setting (in dB) for *each* DTV receiver, which is the reception **MARGIN** (in dB) relative to the truck's noise floor

a. Note and record any difference, if any, between DTx active and DTx inactive

12. Return attenuator to original setting

iv. Document DTx system for antenna ***range of rotation*** (ease of consumer adjustment)

1. Set attenuator level, if possible, so that signal level around entire 360 degrees azimuth range falls between -30 dBm and -70 dBm, and record value

2. Slowly rotate directional *outdoor* antenna, recording angular sections (in degrees) where DTV service is present

a. Maximum of 6 sectors is considered (practical limitation for time), with a sector requiring to be at least 30 degrees for consideration)

b. More sectors than this, and adjustment is deemed unacceptable for average consumer (make note in Comments section regarding sectors and total degrees)

3. At *each* antenna bearing *transition* from good to bad DTV reception or vice versa:

a. Record antenna bearing (in degrees, with respect to true North)

b. Record total *average* signal power (dBm/6 MHz)

c. Calculate & record *outdoor* **FIELD STRENGTH** (dBµV/m) using truck system gain, attenuator value, channel-dependent dipole factor, and channel-dependent antenna gain

d. Calculate & record **SNR** (in dB) using the measured signal level, input attenuator value, and truck's noise floor (anything less than 15 dB can <u>not</u> be received error free)

e. Record and save spectrum data (20 MHz span, 10 dB/div, TIF)

f. Record and save RF Watermark data (RPT) for all DTx signals

g. Measure & record DTS-induced multipath information

i. Document echo amplitude values (in dB) & delay values(in μsecs) from all DTx transmitters

ii. Note any significant large pre-echo and post-echo amplitudes and delays in the comments

h. Record *failure mode* code for each sector and enter comments about unique causes of failure in site comments section for each failed sector.

i. No failure (code 0)

ii. Signal level (code 1)

iii. Multipath, natural (code 2)

iv. Multipath, DTx-induced (code 3)

v. Interference (code 4)

vi. Signal level and multipath (code 5)

vii. Signal level and interference (code 6)

viii. Multipath plus interference (code 7)

ix. Other, with specific explanation in comments section (code 8)

4. After rotating through entire 360 degrees, record *total* degrees of reception (in degrees)

a. Note any difference in range of rotation between DTx active and DTx inactive

c. Repeat field test procedure for antenna @ 15' AGL

3) <u>CH 12 Measurements</u>

a. Repeat field test procedure used for CH 33

4) <u>CH 65 Measurements</u>

a. Repeat field test procedure used for CH 33

b. Except for ESB measurements (no ESB CH 65 transmitter, which means there is no DTx OFF test)

5) Record any final comments that describe conditions at the test site

6) Backup all electronic files created at test site *before* departing

a. Data Spreadsheet (XLS)

b. Spectrum analyzer files (TIF)

c. RF Watermark files (RPT)

d. Digital Pictures (JPG)

7) Prepare to leave test site

a. Lower mast

b. Remove antenna from hydraulic mast, and secure in truck

c. Gather parking cones, and secure in truck

8) Leave test site

APPENDIX 5 STEP-BY-STEP INDOOR FIELD TEST PROCEDURES

The detailed outdoor field test procedures consist of a *morning calibration* and the actual remote *field test.* A companion customized Excel spreadsheet (available upon request from MTVA) allowed data entry by the field engineer directly into the computer and also served as a script that provided the engineers with a list of "cues" to follow for consistent measurement procedures. This was especially important in light of the fact that there were two teams of field test personnel that worked in parallel for these field measurements. Coordination between the two teams was very crucial with regard to transmitter control (i.e., ON/OFF switching). Detailed comments were also required to be entered by the field engineers, which described what was being observed at each test site. These comments were an important addition to the numerical results.

The indoor DTS field test was conducted similarly to the outdoor field test, first with the ESB transmitter ON alone (except for CH 65) and then with all the DTx transmitters active. The companion *outdoor* field test site, referred to as the "driveway" test site, was evaluated simultaneously (i.e., in parallel) with the indoor field test site using the second truck and crew, making use of the same DTx transmitter switching and documenting simultaneous RF propagation conditions. The outdoor field test truck was required to be parked reasonably close (as possible) to the location of the indoor test site (within 50').

Each test home's resident was contacted by MSW prior to the day of the visit to confirm availability and arrival time. The same morning calibration procedure was used for both the outdoor and indoor field test equipment in the previous section.

Note that both the primary *dipole* antenna (with "figure-8" azimuth pattern) and a secondary directional antenna were employed in the indoor testing. In this case, a *passive* directional Silver Sensor was used for the CH 33 and CH 65 UHF stations with the active WIAD distribution system (i.e., amplifier and splitter) while an *active* directional Winegard Sharpshooter antenna was used for the CH 12 high-VHF station with the same external WIAD distribution system. While the use of an active antenna (or a passive antenna with an active distribution system) possibly improves the sensitivity and thus weak-signal DTV reception over that of a purely passive antenna, the DTx field test signal levels in New York City were not generally expected to be weak, but rather strong. In situations such as this, passive antennas may supply DTV signals with sufficient strength to allow successful DTV reception, providing the multipath can be handled by receiver's equalizer. Also, at every indoor test site, a smart antenna was connected to one of the 5G DTV receivers (Rx2) for determination of successful reception with automatic antenna adjustment.

This indoor field test has provided further information about requirements for successful indoor DTV reception in the greater New York City region with and without DTx.

INDOOR FIELD TEST SITE MEASUREMENT PROCEDURE

1) Arrive at field test site
   a. All indoor test sites will have a corresponding outdoor "driveway" test site.
      i. Park vehicle for "driveway" measurements as close as possible to indoor test location
      ii. Perform safety checks (same as in outdoor test plan)
      iii. Driveway measurements will be made with the same outdoor directional antenna at both 30' AGL and 15' AGL
      iv. Driveway measurements will be made simultaneously with the indoor measurements
   b. Transport test equipment into home (with permission of homeowner)
   c. Set up equipment so that antenna can be placed on a tripod in a *typical* and *reasonable* location within the room of choice, preferably near an existing television set. Otherwise, select a reasonable location where a television set might reside.
      i. Primary antennas
         1. For CH 33 and CH 65, *passive* adjustable UHF dipole with active WIAD distribution system
         2. For CH 12, *passive* adjustable VHF dipole with active WIAD distribution system
      ii. Secondary antennas
         1. For CH 33 and CH 65, *passive* UHF Silver Sensor with active WIAD distribution system
         2. For CH 12, *active* VHF Sharpshooter with active WIAD distribution system
   d. Perform quick on-site self-calibration

i. With input attenuator *temporarily* at maximum value, measure & record the indoor system noise floor (in dBm/6 MHz) on all 3 RF channels, verifying that it is within proper tolerance from that measured in morning calibration

ii. Verify computer, test equipment, and camera have correct date and time

e. Document test site

i. Record site number & name (that can be easily matched with its corresponding outdoor test site number)

ii. Record specific street address and general area description

iii. Record test date and time

iv. Record GPS latitude & longitude coordinates (in degrees, minutes, & seconds) of test site

v. Record *distance* from test site (in miles) to *each* DTS Tx as determined by GPS receiver

vi. Record *bearing* from test site (degrees with respect to true north) to *each* DTS Tx as determined by GPS receiver

vii. Record basic description of weather (temperature, sunny, partly sunny, cloudy, rain, drizzle, fog, snow, windy, etc.)

viii. Record description of any *unusual* structures in nearby surrounding areas

ix. Document *indoor* test site

1. Take digital pictures of the test site room, whenever possible
2. Note significant nearby obstructions within the home such as adjacent rooms, large metal objects (e.g., piano, refrigerator, washing machines, etc.), plastered walls with metal lathe, etc. or outside the home (e.g., buildings, bridges, water towers, elevated train tracks, overpasses, etc.)
3. Record room location within building
   a. Floor number (0 for ground floor, -1 for basement, 2 or second floor, etc.)
   b. Position in building (exterior, interior)
   c. Estimate of height of floor above ground level (in feet, AGL)
   d. # of windows(s), direction(s), size of windows
4. Describe building structure and materials
   a. Construction materials (e.g., frame, brick, stucco, etc.)
   b. Wall construction and insulation materials (e.g., plasterboard, plaster walls with metal lathe, foil-backed insulation, etc.)
   c. Windows in room where testing is to occur (size, type of glass, direction facing, type of frame material, etc.)

2) CH 33 Measurements

a. CH 33 coverage with *primary* antenna with **ESB alone**

i. Turn **OFF** all gap filler transmitters

ii. Adjust *primary* indoor antenna direction for *maximum* total *average* signal power as measured on spectrum analyzer

iii. Document DTx system with *maximum* (peaked) signal level

1. Record antenna bearing (in degrees with respect to true North)
   a. Calculate & record difference between maximum signal antenna bearing and bearing to ESB
   b. Note if antenna is pointed in a direction *significantly* different (> 45 degrees) from bearing to ESB

2. Adjust input attenuator so that signal level is about –50 dBm/6 MHz at WIAD amplifier *output* or adjust to 0 dB if the largest available output signal is less than -50 dBm
3. Record attenuator setting (in dB)
4. Measure & record total *average* signal power (in dBm/6 MHz)
5. Calculate & record indoor **FIELD STRENGTH** (in dBμV/m) using portable amplifier system gain, attenuator value, channel-dependent dipole factor, and channel-dependent antenna gain
6. Calculate & record **SNR** (in dB) of received signal using the measured signal level, input attenuator value, and portable amplifier's noise floor (anything less than 15 dB can not be received error free)
7. Record and save spectrum plot (20 MHz span, 10 dB/div, TIF)
    a. Note any significantly larger NTSC or ATSC signals within ±4.5 channels (i.e. within ±30 MHz of desired channels center frequency) that could possibly cause interference to the DTx signal
    b. Record levels of any of these signals that are greater than 20 dB above the desired DTV signal's total average power level (in 6 MHz)
    c. Record additional spectrum plot (60 MHz span, 10 dB/div, TIF), *if necessary*
8. Record & save RF Watermark data (RPT) for ESB signal
9. Measure & record ESB *naturally* occurring echo amplitudes & delays
    a. Document SDR value (in dB), which is total integrated energy in the channel impulse response *other* than main impulse energy
    b. Note any significant large pre-echo and post-echo amplitudes and delays in the comments
10. Determine & record **SERVICE** for *each* DTV receiver.
    a. Watch video for 3 minutes
    b. Count and record # of burst errors or "hits" (acceptable reception defined as ≤ 3 "hits" in 3 minutes)
        i. Enter total # of burst errors (0 – 18)
        ii. If partial picture viewable, but very bad (>18 errors), enter 555
        iii. If absolutely no picture viewable, enter 999
    c. Record *failure mode* code and enter comments about cause of failure in site comments.
        i. No failure (code 0)
        ii. Signal level (code 1)
        iii. Multipath, natural (code 2)
        iv. Multipath, DTx-induced (code 3)
        v. Interference (code 4)
        vi. Signal level and multipath (code 5)
        vii. Signal level and interference (code 6)
        viii. Multipath plus interference (code 7)
        ix. Other, with specific explanation in comments section (code 8)
    d. Note reception sensitivity to any personnel movement in vicinity of antenna
11. Increase attenuation to lower signal down to threshold (**TOV**) for *each* DTV receiver, and document attenuator setting (in dB) for each *receiver*, which is the reception **MARGIN** (in dB) relative to the portable amplifier's noise floor.
12. Return attenuator to original setting

iv. Document DTx system for antenna ***range of rotation*** (ease of consumer adjustment)

1. Set attenuator level, if possible, so that signal level around entire 360 degrees azimuth range falls between -30 dBm and -70 dBm, and record value
2. Slowly rotate primary *indoor* antenna, recording angular sectors (in degrees) where DTV service exists
   a. Maximum of 6 sectors will be considered (practical limitation for time)
   b. More sectors than this, and adjustment is deemed unacceptable for typical consumer (make note in Comments section regarding sectors and total degrees)
3. At *each* antenna bearing *transition* from good to bad DTV reception and vice versa:
   a. Record antenna bearing (in degrees) with respect to *maximum* signal strength bearing
   b. Record total *average* signal power (dBm/6 MHz)
   c. Calculate & record *indoor* **FIELD STRENGTH** (in dBμV/m) using portable amplifier system gain, attenuator value, channel-dependent dipole factor, and channel-dependent antenna gain
   d. Calculate & record **SNR** (in dB) using the measured signal level, input attenuator value, and portable amplifier's noise floor (anything less than 15 dB can not be received error free)
   e. Record and save spectrum plot (20 MHz span, 10 dB/div, TIF)
   f. Record & save RF Watermark data (RPT) for ESB signal
   g. Measure & record ESB *naturally*-occurring multipath information
      i. Document **SDR** value (in dB), which is total energy in channel impulse response other than main impulse energy
      ii. Note any significant large pre-echo and post-echo amplitudes and delays
   h. Record *failure mode* code for *each* sector and enter comments about any *unique* causes of failure in site comments
      i. No failure (code 0)
      ii. Signal level (code 1)
      iii. Multipath, natural (code 2)
      iv. Multipath, DTx-induced (code 3)
      v. Interference (code 4)
      vi. Signal level and multipath (code 5)
      vii. Signal level and interference (code 6)
      viii. Multipath plus interference (code 7)
      ix. Other, with specific explanation in comments section (code 8)
4. After rotating antenna through entire 360 degrees, record total degrees of reception (in degrees)

b. CH 33 coverage <u>*with*</u> **ESB** and **4** gap fillers **ON**

i. Turn **ON** <u>all</u> gap filler transmitters

ii. Adjust primary *indoor* antenna direction for *maximum* total *average* signal power as measured on spectrum analyzer

iii. Document DTx system with maximum (peaked) signal level

1. Record antenna bearing (in degrees with respect to true North)
   a. Calculate & record difference between maximum signal antenna bearing and bearing to ESB