RWHC ITN FCC Pilot Program Quarterly Data Report
1/30/09 update

APPENDIX D – Pages 73-75 of Federal Communications Commission FCC 07-198

11/30/08: Note regarding quarterly revisions: Our goal for Quarterly Report revisions is to maintain the ability for readers to get a comprehensive answer to the report questions and at the same time to provide them with an easy way to see how things have changed since the last quarterly report. We have worked to accomplish this in two ways: (1) we have used a new font color in those places where we have made changes in the primary answer section of the text from the previous Quarterly report, and (2) at the end of each question, we have indicated whether a change was made, and what it was (this way, the changes will still be understandable if printed out in black and white). We have also included "responsive data separated by month," in those locations (such as actions/implementations completed) where it made sense to do so. Will be using blue font color for the 11/30/09 Quarterly Report.

1/30/09: Will be using red font color for the 1/30/09 Quarterly Report.

1. Project Contact and Coordination Information

a. Identify the project leader(s) and respective business affiliations.

Project Coordinator:
Name: Louis Wenzlow
Affiliations: Rural Wisconsin Health Cooperative Information Technology Network (RWHC ITN) and Rural Wisconsin Health Cooperative (RWHC)

Associate Project Coordinator:
Name: David Chitwood
Affiliations: Rural Wisconsin Health Cooperative Information Technology Network (RWHC ITN) and Rural Wisconsin Health Cooperative (RWHC)

10/30/08 Update: No changes since last (7/29/08) quarterly report.

1/30/09 Update: No changes since the last (11/30/08) Quarterly Report.

b. Provide a complete address for postal delivery and the telephone, fax, and e-mail address for the responsible administrative official.

Project Coordinator:
Name: Louis Wenzlow
Title: Chief Information Officer
Mail Address: 880 Independence Lane, Sauk City, WI 53583
Email: lwenzlow@rwhc.com
Phone: (608) 643-2343 ext 237

Associate Project Coordinator:
Name: David Chitwood
Title: IT Manager
Mail Address: 880 Independence Lane, Sauk City, WI 53583
Email: dchitwood@rwhc.com
Phone: 608) 643-2343 ext 242

10/30/08 Update: No changes since last (7/29/08) quarterly report.

1/30/09 Update: No changes since the last (11/30/08) Quarterly Report.

c. Identify the organization that is legally and financially responsible for the conduct of activities supported by the award.

Rural Wisconsin Health Cooperative Information Technology Network

10/30/08 Update: No changes since last (7/29/08) quarterly report.

1/30/09 Update: No changes since the last (11/30/08) Quarterly Report.

d. Explain how the project is being coordinated throughout the state or region.

This project is separate from but related to an existing rural Wide Area Network initiative that connects over 30 rural hospitals, clinics, regional providers, and others for a variety of data exchange purposes. The primary goals of the project are (1) to provide high speed, redundant WAN connectivity for facilities participating in a RWHC ITN Shared EHR Initiative, (2) to provide high speed connectivity for other Wisconsin facilities engaged in telemedicine, data exchange, and other bandwidth intensive purposes, and (3) to implement WAN security and reporting features.

As part of the initial coordination effort, project planners reached out to the following entities: (1) representatives of the 8 hospitals engaged in a Shared EHR vendor selection process (4 of these 8 ultimately decided to participate), (2) the CEOs of the then 32 rural hospitals that make up the Rural Wisconsin Health Cooperative, (3) the CIOs of 4 tertiary care centers in South Central and Western Wisconsin, and (4) with the assistance of the Wisconsin Office of Rural Health, representatives of all Wisconsin critical access hospitals (CAHs).

At the time of Pilot Program application submission, 17 hospitals expressed potential interest in participating.

Due to the timing of the Shared EHR initiative, Year One activities focused exclusively on the project's primary goal of providing high speed, redundant connectivity for the 4 Shared EHR hospitals, 2 affiliated clinics, and 2 Shared EHR datacenters. Year Two and Three activities may be expanded to other original applicant hospitals with telemedicine, data exchange, and other bandwidth intensive use cases. Looking forward to year four and beyond, project planners look to expand participants as entity use cases align with network benefits. Likely future participants include additional shared EHR facilities and affiliate clinics, and hospitals with data exchange use cases with other entities already on the network.

10/30/08 Update: Year Two activities will involve completing the Year 1 network design implementation and will likely not involve adding any additional facilities to the network.

1/30/09 Update: No changes since the last (11/30/08) Quarterly Report.

2. Identify all health care facilities included in the network.

a. Provide address (including county), zip code, Rural Urban Commuting Area (RUCA) code (including primary and secondary), six-digit census tract, and phone number for each health care facility participating in the network.

- St. Joseph's Community Health SVCS. (Hillsboro, WI):
  - Address: 400 Water Avenue, PO Box 527, Hillsboro, WI (Vernon County)

    - Zip code: 54634
    - RUCA code: 10.0
    - Census tract: 960100
    - Phone number: 608-489-8000
- Memorial Hospital of Lafayette County (Darlington, WI):
    - Address: 800 Clay Street, Darlington, WI (Lafayette County)
    - Zip code: 53530
    - RUCA code: 10.0
    - Census tract: 970200
    - Phone number: 608-776-4466
- Tomah Memorial Hospital (Tomah, WI):
    - Address: 321 Butts Avenue, Tomah, WI (Monroe County)
    - Zip code: 54660
    - RUCA code: 7.0
    - Census tract: 950500
    - Phone number: 608-372-2181
- Boscobel Area Health Care (Boscobel, WI):
    - Address: 205 Parker Street, Boscobel, WI (Grant County)
    - Zip code: 53805
    - RUCA code: 7.0
    - Census tract: 960200
    - Phone number: 608-375-4112
- St Joseph's Family Clinic (Elroy, WI)
    - Address: 1705 Omaha Street, PO Box 66, Elroy, WI (Juneau County)
    - Zip code: 53929
    - RUCA code: 10
    - Census tract: 990200
    - Phone number: 608-489-8270
- St Joseph's Family Clinic (Wonewoc, WI)
    - Address: 301 Railroad Street, Wonewoc, WI (Juneau County)
    - Zip code: 53968
    - RUCA code: 10
    - Census tract: 990600
    - Phone number: 608-464-3575
- RWHC ITN Sauk City Datacenter
    - Address: 880 Independence Lane, Sauk City WI (Sauk County)
    - Zip code: 53583
    - RUCA code: 7.3
    - Census tract: 000700
    - Phone number: 608-644-3237
- RWHC ITN Madison Datacenter
    - Address: 222 West Washington Avenue, Madison WI (Dane County)
    - Zip code: 53703
    - RUCA code: 7
    - Census tract: 001701
    - Phone number: 608-644-3237

10/30/08 Update: No changes since last (7/29/08) quarterly report.

1/30/09 Update: No changes since the last (11/30/08) Quarterly Report.

b. For each participating institution, indicate whether it is:
i. Public or non-public;
ii. Not-for-profit or for-profit;

iii. An eligible health care provider or ineligible health-care provider with an explanation of why the health care facility is eligible under section 254 of the 1996 Act and the Commission's rules or a description of the type of ineligible health care provider entity.

- St. Joseph's Community Health SVCS. (Hillsboro, WI):
  - Non-public
  - Not-for-profit
  - Eligible health care provider (critical access hospital)
- Memorial Hospital of Lafayette County (Darlington, WI):
  - Public (county-owned)
  - Not-for-profit
  - Eligible health care provider (critical access hospital)
- Tomah Memorial Hospital (Tomah, WI):
  - Non-public
  - Not-for-profit
  - Eligible health care provider (critical access hospital)
- Boscobel Area Health Care (Boscobel, WI):
  - Non-public
  - Not-for-profit
  - Eligible health care provider (critical access hospital)
- Elroy Clinic
  - Non-public
  - Not-for-profit
  - Eligible health care provider (primary care clinic owned by critical access hospital)
- Wonewoc Clinic
  - Non-public
  - Not-for-profit
  - Eligible health care provider (primary care clinic owned by critical access hospital)
- Madison Datacenter
  - Non-public
  - Not-for-profit
  - Eligible health care provider (consortium datacenter used for services necessary to the provision of healthcare by eligible healthcare providers)
- Sauk City Datacenter
  - Non-public
  - Not-for-profit
  - Eligible health care provider (consortium datacenter used for services necessary to the provision of healthcare by eligible healthcare providers)

10/30/08 Update: No changes since last (7/29/08) quarterly report.

1/30/09 Update: No changes since the last (11/30/08) Quarterly Report.

3. Network Narrative: In the first quarterly report following the completion of the competitive bidding process and the selection of vendors, the selected participant must submit an updated technical description of the communications network that it intends to implement, which takes into account the results its network design studies and negotiations with its vendors. This technical description should provide, where applicable:

a**. Brief description of the backbone network of the dedicated health care network, e.g., MPLS network, carrier-provided VPN, a SONET ring;**

Rural Wisconsin Health Cooperative ITN has initially selected two carriers, CenturyTel and Charter, to provide segments of the dedicated healthcare network. Included in this network thus far is a point-to-point Charter fiber connection, 3 point-to-point CenturyTel Metro Ethernet connections, 1 combination point-to-point CenturyTel DS3 and Metro Ethernet connection, and 2 point-to-point CenturyTel T-1 connections. The network design, with all connections terminating to a common datacenter (or else to a facility that then has a connection that terminates to the common datacenter), allows the RWHC ITN network to be data transmission technology type and carrier agnostic. The benefit of this model is that we can seek out the very best and most cost-effective solutions for each location, irrespective of other wide area network connections already in place. Not only does this mean that our initial network is the most cost effective, it also means that we have flexibility to create redundancy by using various transmission means, and that we have future flexibility to add connections based on the most current best pricing information as our network grows.

Depending on the project and state there may be a number of ways to construct dedicated healthcare networks, including leveraging volume and creating simplicity by contracting with a single vendor and using one transmission technology. In rural Wisconsin, where there are dozens of vendors that are positioned to provide advanced telecommunications in certain locations but not others, so that cost fluctuations by location are extreme, the multi-vendor network design strategy we are pursuing seems to make the most sense.

10/30/08 Update: No changes since last (7/29/08) quarterly report.

1/30/09 Update: No changes since the last (11/30/08) Quarterly Report.

b. Explanation of how health care provider sites will connect to (or access) the network, including the access technologies/services and transmission speeds;

Three hospitals (Boscobel Area Health Care, Tomah Memorial Hospital and Memorial Hospital of Lafayette County) connect to the Madison Data Center via a CenturyTel 20 Mb Metro Ethernet connection. St Josephs Community Health Services connects to the Madison Data Center over a combination of a 20Mb DS3 and 20 Mb Metro Ethernet. Because of St Josephs Community Health Services location, a straight 20Mb connection wasn't possible; instead St Josephs has a DS3 that terminates at the Tomah, WI CenturyTel CO, which then converts to a 20Mb Metro Ethernet connection to the Data Center. The two clinics (Wonewoc and Elroy) connect directly to St Josephs Community Health Services via dedicated T-1 (1.5 Mg) connections. The Sauk and Madison Data Centers connect over a 100Mb fiber connection provided by Charter. The 4 hospitals and the Sauk datacenters will also have redundant connections, selection of which is pending. The likely most cost effective means of creating redundancy is to use local Internet providers and create point-to-point VPN connections, though this has not yet been formally decided.

Each Data Center has two Fortigate 310B Multi-threat Security Appliances/Routers operating in High Availability acting as the termination equipment. Each hospital (Boscobel Area Health Care, Tomah Memorial Hospital, St Josephs Community Health Services and Memorial Hospital of Lafayette County) has two Fortigate 200A Multi-threat Security Appliances/Routers operating in High Availability acting as the termination equipment. The two clinics (Wonewoc and Elroy) have an Adtran router with a T-1 card as their terminating device with an Adtran router with two T-1 cards terminating at St Josephs Community Health Services.

10/30/08 Update: Changed "will connect" to "connect" in those cases where connections have been installed.

The CenturyTel connections were installed in June, with the hospitals beginning to use the connections for the ITN Shared HIS as follows: June 7th: Tomah converts to the Shared HIS in Madison; July 1st: Memorial Hospital of Lafayette County, St. Joseph's Community Health Services, and the Wonewoc and Elroy clinics begin to use the Shared HIS in Madison; July 26th: Boscobel converts to the Shared HIS in Madison

The 100 Mg Charter Connection between the Sauk and Madison Datacenters was installed on August 10th. The Mimix process that replicates data between the two datacenters went live on September 6th.

1/30/09 Update: No changes since the last (11/30/08) Quarterly Report.

c. Explanation of how and where the network will connect to a national backbone such as NLR or Internet2;

Connectivity to Internet2 was considered in our original application as a potential activity, depending on participant facility use cases and further research. If we connect to Internet2, this will likely be a year 3 activity.

10/30/08 Update: No changes since last (7/29/08) quarterly report.

1/30/09 Update: No changes since the last (11/30/08) Quarterly Report.

d. Number of miles of fiber construction, and whether the fiber is buried or aerial;

There was a $1500 cost of fiber construction. The distance for the construction was one city block and the cable is buried.

10/30/08 Update: No changes since last (7/29/08) quarterly report.

1/30/09 Update: No changes since the last (11/30/08) Quarterly Report.

e. Special systems or services for network management or maintenance (if applicable) and where such systems reside or are based.

RWHC ITN is using the SolarWinds Orion product to monitor network activity, dropped packets, and bandwidth utilization. This product is currently based in the Sauk City location, though it may be moved to the Madison location, depending on bandwidth monitoring needs and further testing. RWHC ITN will be using the Forti-manager product to manage the Fortigate termination devices/routers; and the Forti-analyzer product for network intrusion detection and reporting. These products are based in the Madison location. RWHC ITN will be using Citrix to manage network bandwidth utilization. Citrix will be based in the Madison location.

10/30/08 Update: Changed "will" to "is" for Solar Winds, since it was implemented on July 24th and is currently being used. The Forti-manager and analyzer products have been installed in the Madison datacenter and are in the process of being configured. The Citrix network management hardware component is being built at a computer laboratory and is scheduled to be delivered to Madison in late October.

1/30/09 Update: The Forti-analyzer product has been configured and is currently actively detecting potential threats. The Forti-manager product is configured and is used a central management point for all the Fortigate routers. The Citrix hardware has been installed at the Madison datacenter, initial configuration is complete, and early Pilot end-user testing is underway.

4. List of Connected Health Care Providers: Provide information below for all eligible and non-eligible health care provider sites that, as of the close of the most recent reporting period, are connected to the network and operational.

a. Provider name
See below

b. Eligible provider (Yes/No);
See below

c. Type of network connection (e.g., fiber, copper, wireless);
See below

d. How connection is provided (e.g., carrier-provided service; self-constructed; leased facility);
See below

e. Service and/or speed of connection (e.g., DS1, DS3, DSL, OC3, Metro Ethernet (10 Mbps);
See below

f. Gateway to NLR, Internet2, or the Public Internet (Yes/No);
See below

g. Site Equipment (e.g., router, switch, SONET ADM, WDM), including manufacturer name and model number.
See below

a. *St. Joseph's Community Health SVCS. (Hillsboro, WI):*
b. Eligible health care provider (critical access hospital)
c. Copper Connectivity
d. Leased Service (CenturyTel)
e. 20Mb DS3 to 20Mb Metro Ethernet
f. Gateway to NLR, Internet2, or the Public Internet: No
g. Terminating Equipment: Fortigate 200A Multi-threat Security Appliances/Routers; and Adtran router for clinic connections

10/30/08 Update: No changes since last (7/29/08) quarterly report.
1/30/09 Update: No changes since the last (11/30/08) Quarterly Report.

a. *Memorial Hospital of Lafayette County (Darlington, WI):*
b. Eligible health care provider (critical access hospital)
c. Copper Connectivity
d. Leased Service (CenturyTel)
e. 20Mb Metro Ethernet
f. Gateway to NLR, Internet2, or the Public Internet: No
g. Terminating Equipment: Fortigate 200A Multi-threat Security Appliances/Routers

10/30/08 Update: No changes since last (7/29/08) quarterly report.
1/30/09 Update: No changes since the last (11/30/08) Quarterly Report.

a. *Tomah Memorial Hospital (Tomah, WI):*
b. Eligible health care provider (critical access hospital)
c. Copper Connectivity
d. Leased Service (CenturyTel)
e. 20Mb Metro Ethernet

f. Gateway to NLR, Internet2, or the Public Internet: No
g. Terminating Equipment: Fortigate 200A Multi-threat Security Appliances/Routers

10/30/08 Update: No changes since last (7/29/08) quarterly report.
1/30/09 Update: No changes since the last (11/30/08) Quarterly Report.

a. *Boscobel Area Health Care (Boscobel, WI):*
b. Eligible health care provider (critical access hospital)
c. Copper Connectivity
d. Leased Service (CenturyTel)
e. 20Mb Metro Ethernet
f. Gateway to NLR, Internet2, or the Public Internet: No
g. Terminating Equipment: Fortigate 200A Multi-threat Security Appliances/Routers

10/30/08 Update: No changes since last (7/29/08) quarterly report.
1/30/09 Update: No changes since the last (11/30/08) Quarterly Report.

a. *Elroy Clinic*
b. Eligible health care provider (primary care clinic owned by critical access hospital)
c. Copper Connectivity
d. Leased Service (CenturyTel)
e. T-1 Connection (1.5 Mb)
f. Gateway to NLR, Internet2, or the Public Internet: No
g. Adtran Router

10/30/08 Update: No changes since last (7/29/08) quarterly report.
1/30/09 Update: No changes since the last (11/30/08) Quarterly Report.

a. Wonewoc Clinic
b. Eligible health care provider (primary care clinic owned by critical access hospital)
c. Copper Connectivity
d. Leased Service (CenturyTel)
e. T-1 Connection (1.5 Mb)
f. Gateway to NLR, Internet2, or the Public Internet: No
g. Adtran Router

10/30/08 Update: No changes since last (7/29/08) quarterly report.
1/30/09 Update: No changes since the last (11/30/08) Quarterly Report.

a. *Madison Datacenter*
b. Eligible health care provider (consortium datacenter used for services necessary to the provision of healthcare by eligible healthcare providers)
c. All connections terminate at this location, so not applicable
d. Not applicable
e. Not applicable
f. Gateway to NLR, Internet2, or the Public Internet: No
g. Fortigate 310B Multi-threat Security Appliances/Routers; Citrix server and software are in the process of being implemented; Forti-analyzer and Forti-manager are in the process of being implemented

10/30/08 Update: Citrix and the Forti-analyzer and manger products are now in the process of being implemented. See 3e for more detail.
1/30/09 Update: See 3E for update on Citrix and Forti-analyzer and manager products.

a. *Sauk City Datacenter*
b. Eligible health care provider (consortium datacenter used for services necessary to the provision of healthcare by eligible healthcare providers)
c. Fiber Connectivity

d. 100 Mb Fiber Connection
e. Leased Service (Charter Communications)
f. Gateway to NLR, Internet2, or the Public Internet: No
g. Fortigate 310B Multi-threat Security Appliances/Routers; Orion Solar Winds network monitoring system

10/30/08 Update: Solar Winds was implemented on July 24th.
1/30/09 Update: No changes since the last (11/30/08) Quarterly Report.

h. Provide a logical diagram or map of the network.

A logical diagram of each facility's connection as well as an overall network map has been attached to this document as Exhibit A.

10/30/08 Update: No changes since last (7/29/08) quarterly report.
1/30/09 Update: No changes since the last (11/30/08) Quarterly Report.

5. Identify the following non-recurring and recurring costs, where applicable shown both as budgeted and actually incurred for the applicable quarter and funding year to-date.

The costs identified below are from the three contracts (CenturyTel, Charter, and Digicorp) that have been signed to date and one hired WAN Specialist staff position.

a. Network Design

No recurring or non-recurring costs are anticipated for Network Design at this point in time.

10/30/08 Update: No changes since last (7/29/08) quarterly report.
1/30/09 Update: No changes since the last (11/30/08) Quarterly Report.

b. Network Equipment, including engineering and installation

Network equipment (including non-recurring network termination hardware and installation; recurring network termination hardware support; non-recurring network management hardware, software, and installation; and recurring network management equipment support) costs per the Digicorp contract are **~~$549,388~~ 557,302**.

10/30/08 Update: Due to a calculation error, the total contract number has been revised to $557,302. This contract is part of a 2007 FCL, which was issued on October 1st. The 467 was issued on October 6th. The first and to-date only invoice ($385,602) was processed on October 14th.

1/30/09 Update: No changes since the last (11/30/08) Quarterly Report.

c. Infrastructure Deployment/Outside Plant
i. Engineering
ii. Construction

The Charter contract has a one-time **$2,500** installation fee for infrastructure deployment.

10/30/08 Update: The $2,500 is part of an August invoice that has been received by the ITN. We are in the process of posting the required forms to receive FCL and 467 for this.

1/30/09 Update: No changes since the last (11/30/08) Quarterly Report.

d. Internet2, NLR, or Public Internet Connection

The public Internet will likely be used for point-to-point VPN redundant connections, but no contracts have yet been signed regarding this facet of the project.

e. Leased Facilities or Tariffed Services

Contracted monthly recurring costs for leased lines, per CenturyTel and Charter contracts, are in the amount of **$13,880**. All CenturyTel circuits are active, though not all sites have been implemented and the first invoice has not yet been received. The Charter circuit is anticipated to go live in August.

10/30/08 Update:

For CenturyTel, we have received estimated costs but no actual invoices (we have been told this is due to a financial system conversion). The estimated costs are as follows: June: $4,000 (month of partial service); July $11,700; August $11,700; September $11,700. The FCL and 467 for these have been processed, so once we receive actual invoices, we will be submitting to USAC.

For Charter, we have received the following invoices: $2035 (month of partial service) for August; and $2180 for September. We are in the process of posting the required forms to receive FCL and 467 for this.

1/30/09 Update: We are waiting for 2008 FCLs to process the below invoices:

For CenturyTel, we have received the following invoices: $42,764 for 6/30-10/20/08, $11,700 for 10/21-11/20/08, $11,700 for 11/21-12/20/08, $11,700 for 12/21/08-1/20/09.

For Charter, we have received the following invoices: $2180 for October, $2180 for November and $2180 for December.

f. Network Management, Maintenance, and Operation Costs (not captured elsewhere)

Network management, maintenance, and operation costs will be incurred for a Wide Area Network Specialist position that has been hired. The expected cost of this position for the period of 7/08-6/09 is $97,770 which includes salary and benefits. Average monthly recurring costs will be **$8,148**.

Incurred costs for June, 2008 (Ray's first partial month of employment) were $3,970.

10/30/08 Update: Incurred cost for July, 2008 was $6,102; for August (when the position became eligible for benefits) was $7,132; for September was $7263. We are in the process of posting the required forms to receive FCL and 467 for this.

1/30/09 Update: Still waiting for FCL. Incurred cost for October was $10,161 (we pay bi-weekly and three payrolls occurred in October), November was $7,154 and December was $7,317.

g. Other Non-Recurring and Recurring Costs

There are no other costs to date.

10/30/08 Update: No changes since last (7/29/08) quarterly report.
1/30/09 Update: No changes since the last (11/30/08) Quarterly Report.

6. Describe how costs have been apportioned and the sources of the funds to pay them:

a. Explain how costs are identified, allocated among, and apportioned to both eligible and ineligible network participants.

The RWHC ITN project currently includes only eligible participants. Each participant will be billed monthly for their 15% contribution of: (1) their individual telecommunications costs, (2) their individual facility termination equipment costs paid over 3 years; and (3) their portion of all other FCC Pilot Program funded costs (datacenter termination equipment, network management equipment, staffing, etc.), divided equally initially between the four hospitals.

10/30/08 Update: No changes since last (7/29/08) quarterly report.
1/30/09 Update: No changes since the last (11/30/08) Quarterly Report.

b. Describe the source of funds from:
i. Eligible Pilot Program network participants

Eligible participants will be paying their 15% share from income from their operations.

10/30/08 Update: No changes since last (7/29/08) quarterly report.
1/30/09 Update: No changes since the last (11/30/08) Quarterly Report.

ii. Ineligible Pilot Program network participants

The RWHC ITN project currently includes only eligible participants.

10/30/08 Update: No changes since last (7/29/08) quarterly report.
1/30/09 Update: No changes since the last (11/30/08) Quarterly Report.

c. Show contributions from all other sources (e.g., local, state, and federal sources, and other grants).
i. Identify source of financial support and anticipated revenues that is paying for costs not covered by the fund and by Pilot Program participants.

All costs will be covered by the fund and by Pilot Program participants

10/30/08 Update: No changes since last (7/29/08) quarterly report.
1/30/09 Update: No changes since the last (11/30/08) Quarterly Report.

ii. Identify the respective amounts and remaining time for such assistance.

N/A

10/30/08 Update: No changes since last (7/29/08) quarterly report.
1/30/09 Update: No changes since the last (11/30/08) Quarterly Report.

d. Explain how the selected participant's minimum 15 percent contribution is helping to achieve both the selected participant's identified goals and objectives and the overarching goals of the Pilot Program.

The participants' 15% contribution is clearly helping to achieve participant goals and the overarching goals of the Pilot Program.

Regarding participant goals: with the 85%/15% formula, participant costs are significantly reduced when compared to the cost of telecommunications even when using the Universal Service Fund program. This is partly due to the fact that 15% is usually less than the urban comparable rate used by USF, and partly due to the fact that the Pilot Program requires a rigorous vendor selection process that helps find the best solution for the best price.

One example of how the Pilot Program has benefited an individual facility can be found in the St. Joseph Community Health Services connection. St. Joseph's has an existing $13,000 a month 10 Mb DS3 connection for Radiology transmission. About $12,000 a month of the cost of this connection is reimbursed by USF, so St Joseph's pays about $1,000 a month as the urban comparable rate. With the Pilot Program, St. Joseph's is about to implement a 20 Mb Metro-Ethernet/DS3 connection that costs $2,950 a month, 15% of which is $442.50. Once their Pilot connections are fully operational and once they have disconnected the USF-funded DS3, St. Joseph's will be paying significantly less for significantly more bandwidth and redundancy. The result of this is that St. Joseph's will be able to afford to implement the high-speed redundant configuration required for them to effectively participate in the RWHC ITN shared electronic health record project, which was the primary goal of this Pilot Program initiative.

In addition, since the Pilot Program supports network management systems and staff, which the USF program does not, the small rural hospitals participating in this project can afford to develop a state of the art network required for adequately supporting mission critical healthcare related applications. In our view, this is a crucial component of this Pilot, since telecommunications support without network management support would likely mean that only large hospitals with existing network management expertise and tools would be able to adequately support robust networks. The result would be the promotion of dependency relationships between tertiary centers and their satellites, rather than the empowerment of small rural hospitals to work with other community hospital as well as tertiary partners to create networks that would meet all participants' needs equally. In our view, ongoing Pilot Program network management support will be critical to preventing the promotion of large hospital dominance over small hospitals.

Another beneficial result is that there is a significantly reduced paperwork burden for the individual facilities, even as the paper work burden for the network organization is very high.

Regarding Pilot Program goals: with the 85%/15% formula, the Pilot Program goals of expanding healthcare-related networks and improving cost-effectiveness are clearly achieved. The former goal is achieved by reducing costs and thereby incentivizing network participation, and the latter goal is achieved by (1) incentivizing choosing the most cost effective solution by requiring participants to pay a percentage rather than the urban comparable rate; and (2) requiring a rigorous vendor selection process that helps find the best solution for the best price.

Using the St, Joseph's Community Health Services example, we can already see the significant cost savings potential of the program. USAC is currently paying about $12,000 a month for a 10 Mb DS3 through the USF program. The 20 Mb Pilot Program connection will cost the Pilot Program $2507.50. Once the USF-funded connection is terminated, USAC will effectively be saving about $9492.50 a month, while providing greater bandwidth. Though it is important to point out that network management systems, support, and redundancy will be adding previously unfunded costs, it is our view that the monthly savings identified in the St. Joseph's case study, when expanded to multiple network participants and projects, will be the most cost effective model moving forward, especially as healthcare providers are faced with increased bandwidth requirements related to PACS, teleradiology, and electronic health records.

As a result of the above, we strongly encourage Pilot Program organizers and policy makers to begin planning for the transition of the Pilot Program into a permanent program.

10/30/08 Update: No changes since last (7/29/08) quarterly report.
1/30/09 Update: No changes since the last (11/30/08) Quarterly Report.

7. Identify any technical or non-technical requirements or procedures necessary for ineligible entities to connect to the participant's network.

The RWHC ITN project currently includes only eligible participants.

10/30/08 Update: No changes since last (7/29/08) quarterly report.
1/30/09 Update: No changes since the last (11/30/08) Quarterly Report.

8. Provide an update on the project management plan, detailing:

a. The project's current leadership and management structure and any changes to the management structure since the last data report; and

The project's leadership and management structure is essentially the same as was last reported, with Louis Wenzlow serving as Project Coordinator, and David Chitwood serving as Associate Project Coordinator. As indicated above, we have added a Wide Area Network Specialist, Ray Brown, who will be managing the Pilot Program network systems and equipment.

10/30/08 Update: No changes since last (7/29/08) quarterly report.
1/30/09 Update: No changes since the last (11/30/08) Quarterly Report.

b. In the first quarterly report, the selected applicant should provide a detailed project plan and schedule. The schedule must provide a list of key project deliverables or tasks, and their anticipated completion dates. Among the deliverables, participants must indicate the dates when each health care provider site is expected to be connected to the network and operational. Subsequent quarterly reports should identify which project deliverables, scheduled for the previous quarter, were met, and which were not met. In the event a project deliverable is not achieved, or the work and deliverables deviate from the work plan, the selected participant must provide an explanation.

Topic	Item	Due Date	Group/Individuals Responsible
1. Network Design Study Completed	RWHC staff develop Pilot Program WAN specifications	10/07 complete	Louis Wenzlow (LW)
2. Year 1 RFP Development	Year 1 site needs identified and articulated in RFP	4/08 complete	LW
3. Year 1 Vendor Selection	RFP responses assessed and vendors selected	5/08 complete	LW and David Chitwood (DC)
4. WAN Specialist hired	WAN Specialist selection process and hiring	6/08 Ray Brown	LW/DC

		hired	
5. Year 1 CenturyTel installations and corresponding Digicorp termination hardware installations	CenturyTel Tomah connection go-live	6/04/08 complete	DC/Ray Brown (RB)
	Corresponding Tomah Fortigate installation	6/04/08 complete	DC/RB
	Corresponding Madison Fortigate installation	6/04/08 complete	DC/RB
	CenturyTel Darlington connection go-live	6/27/08 complete	DC/RB
	Corresponding Fortigate installation	6/27/08 complete	DC/RB
	CenturyTel Hillsboro connection go-live	6/27/08 complete	DC/RB
	Corresponding Fortigate installation	6/27/08 complete	DC/RB
	CenturyTel Elroy connection go-live	6/27/08 complete	DC/RB
	Corresponding Adtran installation	6/27/08 complete	DC/RB
	CenturyTel Wonewoc connection go-live	6/27/08 complete	DC/RB
	Corresponding Adtran installation	6/27/08 complete	DC/RB
	CenturyTel Boscobel connection go-live	6/27/08 complete	DC/RB
	Corresponding Fortigate installation	7/20/08 complete	DC/RB
6. Year 1 Charter installations and corresponding Digicorp termination hardware installations	Charter Sauk Connection go-live	8/01/08 complete	DC/RB
	Corresponding Fortigate installation	8/01/08 complete	DC/RB
7. Year 1 Redundant	These will likely be Point-		

Connection installations (not yet contracted)	to-point VPN over Internet.		
	Goal for contracting	~~8/15/08~~ 12/1/08 3/1/09	LW/DC
	Goal for installation	~~9/15/08~~ 1/1/08 5/1/09	LW/DC
8. Year 1 Forti-manager and Forti-analyzer installation (Digicorp)	To manage Fortigates and provide security reporting (from Madison datacenter)	~~8/05/08~~ 11/15/08 complete	DC/RB
9. Year 1 Solar Winds (Digicorp) Installation	To provide network monitoring (from Sauk datacenter)	8/16/08 complete	DC/RB
10. Year 1 Citrix installation (Digicorp)	Initial planning meeting	9/01/08 complete	DC/RB/LW
	Hardware installation goal	~~10/1/08~~ 11/18/08 complete	RB/DC
	Software installation and rollout schedule yet to be determined: goal for completion	~~2/1/09~~ 5/1/09 In process	RB/DC
11. Year 2 RFP Development	Year 2 sites and site needs identified and articulated in RFP (if new sites added)	TBD	LW/DC
12. Year 2 Vendor Selection	RFP responses assessed and vendors selected (if new sites added)	TBD	LW/DC
13. Year 2 Installation Activities	TBD	TBD	DC/RB
14. Year 3 RFP Development	Year 3 sites and site needs identified and articulated in RFP (if new sites added)	TBD	LW/DC
15. Year 3 Vendor Selection	RFP responses assessed and vendors selected (if new sites added)	TBD	LW/DC
16. Year 3 Installation Activities	TBD	TBD	DC/RB

10/30/08 Update: Schedule changes largely reflect our need to delay implementation work until FCLs, 467s, and invoicing issues were resolved.
1/30/09 Update: Redundant connection contracting and installation has been postponed until FCLs are issued for existing contracts. Focus is to begin paying for 6 month backlog of invoices before adding new ones.

9. Provide detail on whether network is or will become self sustaining. Selected participants should provide an explanation of how network is self sustaining.

10/30/08 Update: Sustainability plan is attached as Exhibit B.
1/30/09 Update: No changes since the last (11/30/08) Quarterly Report.

10. Provide detail on how the supported network has advanced telemedicine benefits:

a. Explain how the supported network has achieved the goals and objectives outlined in selected participant's Pilot Program application;

The following were the goals listed in our application:

1. Using the current RWHC WAN as a starting point, create a fully redundant/ expanded WAN for those facilities participating in the Shared EHR Project
2. Expand the current network to include additional rural facilities and urban tertiary centers, with the goal of creating a larger regional network and more connectivity and data exchange options for WAN participants
3. Enhance WAN security features for new and existing WAN participants
4. Enhance distance education and video-conferencing capabilities between WAN participants, especially those engaged in Shared EHR
5. Promote flexible flow of data/information between WAN participants, as opposed to a proprietary referral-based network configuration

Regarding goal #1: the RWHC ITN is well along the way to creating a fully redundant WAN for facilities participating in the Shared EHR project. Four hospitals, two clinics, and two collaborative datacenters are initially participating. All four hospitals have 20 Mb high speed connections implemented and in use for the Shared EHR project. Both clinics have T1 connections implemented and in use for the Shared EHR Project. The two datacenters are connected via a 100 Mb connection.

The Shared EHR project has proceeded according to plan, with all the hospitals and the two clinics having started to share the same hospital information system/ electronic health record and use commonly owned servers and datacenters.

Redundant termination hardware has been implemented at all four hospitals.

Low cost redundant connections were part of the year 1 RFP and are in the process of being chosen.

10/30/08 Update: The primary connections have now been fully implemented at all the sites. See 3B for more detail.
1/30/09 Update: No changes since the last (11/30/08) Quarterly Report.

Regarding goal #2: the RWHC ITN may be focusing on adding facilities as part of year 2 and 3 activities.

10/30/08 Update: Year Two activities will involve completing the Year 1 network design and will likely not involve adding any additional facilities to the network.
1/30/09 Update: No changes since the last (11/30/08) Quarterly Report.

Regarding goal #3: the RWHC ITN is in the process of implementing termination equipment and network management hardware and software with a variety of advanced security features that will protect the network. Security features include: intrusion detection, heuristic virus detection at the router level, VPN capabilities, network monitoring, security reporting, as well as a variety of other security features and functions.

10/30/08 Update: No changes since last (7/29/08) quarterly report.
1/30/09 Update: Forti-analyzer is now being used to identify security threats to the network.

Regarding goal #4: The RWHC ITN connections will serve to enhance distance education and video-conferencing capabilities by providing more bandwidth for these functions. Facility focus is currently on shared EHR, but we hope to have some case studies relating to this in the future.

10/30/08 Update: No changes since last (7/29/08) quarterly report.
1/30/09 Update: No changes since the last (11/30/08) Quarterly Report.

Regarding goal #5: The RWHC ITN network has been designed to promote the flexible flow of information between participants.

10/30/08 Update: No changes since last (7/29/08) quarterly report.
1/30/09 Update: No changes since the last (11/30/08) Quarterly Report.

b. Explain how the supported network has brought the benefits of innovative telehealth and, in particular, telemedicine services to those areas of the country where the need for those benefits is most acute;

The implementation of EHRs in the rural setting involves a number of well-documented challenges. 2006 reports by the Flex Monitoring Team ("The Current Status of Health Information Technology Use in CAHS"), as well as by the National Advisory Committee on Rural Health and Human Services ("2006 Report to the Secretary: Rural Health and Human Service Issues") identify a variety of adoption barriers, such as financing, lack of sufficient HIT professionals, greater physician resistance to HIT than in urban settings, and limited expertise to facilitate appropriate workflow redesign. Additional barriers in rural healthcare environments include the following: (1) Due to low transaction volumes, financial ROI on clinical HIT investments can be significantly lower—in some cases producing significant negative financial results—for small rural organizations (reference "Implementations of Hospital Computerized Physician Order Entry Systems in a Rural State: Feasibility and Financial Impact" in JAMIA); and (2) The problem of lack of sufficient HIT professionals (and for that matter clinical HIT workflow transformation professionals) is primarily a financial issue rather than an access issue: our smallest rural providers simply cannot afford to hire the number of specialists required to appropriately implement and support an advanced EHR environment (often we see one or two FTEs attempting to support environments analogous to what in larger facilities scores of FTEs might support).

One of the most effective strategies for our smallest rural providers to overcome these barriers is to engage in collaborative HIT arrangements that provide comprehensive, integrated solutions, and pooled staffing to provide appropriate support and education. In order to access these solutions at an affordable cost, the four hospitals participating in year 1 activities have formed an innovative electronic health record consortium that shares datacenters, servers, and systems over the advanced telecommunications lines supported by the Pilot Program.

Without the shared model and the network, several of these low volume rural facilities would likely not have access to the wide range of EHR systems being implemented, such as Lab, Radiology, Pharmacy, Nurse Charting, E-MAR, CPOE, and others, with contraindication checking and decision support tools that will reduce medication errors, facilitate the practice of evidence-based medicine, and improve care quality.

10/30/08 Update: No changes since last (7/29/08) quarterly report.
1/30/09 Update: No changes since the last (11/30/08) Quarterly Report.

c. Explain how the supported network has allowed patients access to critically needed medical specialists in a variety of practices without leaving their homes or communities;

The network does not currently have use-cases in which patients access medical specialists, though this may be a future use-case.

10/30/08 Update: No changes since last (7/29/08) quarterly report.
1/30/09 Update: No changes since the last (11/30/08) Quarterly Report.

d. Explain how the supported network has allowed health care providers access to government research institutions, and/or academic, public, and private health care institutions that are repositories of medical expertise and information;

The supported network does not currently have use-cases in which health care providers have access to government research institutions, etc., though this may be a future use case.

10/30/08 Update: No changes since last (7/29/08) quarterly report.
1/30/09 Update: No changes since the last (11/30/08) Quarterly Report.

e. Explain how the supported network has allowed health care professional to monitor critically ill patients at multiple locations around the clock, provide access to advanced applications in continuing education and research, and/or enhanced the health care community's ability to provide a rapid and coordinated response in the event of a national crisis.

The supported network does not currently have use-cases in which health care providers monitor critically ill patients at multiple locations around the clock, etc., though these may be future use cases.

10/30/08 Update: No changes since last (7/29/08) quarterly report.
1/30/09 Update: No changes since the last (11/30/08) Quarterly Report.

11. Provide detail on how the supported network has complied with HHS health IT initiatives:

a. Explain how the supported network has used health IT systems and products that meet interoperability standards recognized by the HHS Secretary;

Healthcare Management Systems (HMS) and Medinotes are both vendor members of HITSP. More detail on their positions on HITSP interoperability work has been requested but is not available in time for submission. Both vendors do comply with HL7 interoperability standards.

10/30/08 Update: No changes since last (7/29/08) quarterly report.
1/30/09 Update: No changes since the last (11/30/08) Quarterly Report.

b. Explain how the supported network has used health IT products certified by the Certification Commission for Healthcare Information Technology;

The primary applications being used over the network are (1) Healthcare Management Systems (HMS), which was one of only 4 inpatient system vendors initially certified by CCHIT (recently expanded to 9) and (2) Medinotes, which is also CCHIT certified.

10/30/08 Update: No changes since last (7/29/08) quarterly report.
1/30/09 Update: No changes since the last (11/30/08) Quarterly Report.

c. Explain how the supported network has supported the Nationwide Health Information Network (NHIN) architecture by coordinating activities with organizations performing NHIN trial implementations;

The supported network is aware of NHIN related trial activities, but is currently not coordinating activities with NHIN trial sites.

10/30/08 Update: No changes since last (7/29/08) quarterly report.
1/30/09 Update: No changes since the last (11/30/08) Quarterly Report.

d. Explain how the supported network has used resources available at HHS's Agency for Healthcare Research and Quality (AHRQ) National Resource Center for Health Information Technology;

As 2005 AHRQ THQIT Planning grant Project Coordinator and current HRSA CAHHIT Network grant Principle Investigator, Louis Wenzlow, the Pilot Program project coordinator, uses the AHRQ NRC Health IT Portal, and has attended a variety of conferences related to both projects.

10/30/08 Update: No changes since last (7/29/08) quarterly report.
1/30/09 Update: No changes since the last (11/30/08) Quarterly Report.

e. Explain how the selected participant has educated themselves concerning the Pandemic and All Hazards Preparedness Act and coordinated with the HHS Assistant Secretary for Public Response as a resource for telehealth inventory and for the implementation of other preparedness and response initiatives; and

The Project Coordinator and Associate Project Coordinator have reviewed the act. In addition, a summary version of the Act has been distributed to Pilot Program participants.

10/30/08 Update: Initial education had begun.
1/30/09 Update: No changes since the last (11/30/08) Quarterly Report.

f. Explain how the supported network has used resources available through HHS's Centers for Disease Control and Prevention (CDC) Public Health Information Network (PHIN) to facilitate interoperability with public health and emergency organizations.

The supported network has not to date used resources available through HHS's CDC PHIN to facilitate interoperability with public health and emergency organizations.

10/30/08 Update: No changes since last (7/29/08) quarterly report.
1/30/09 Update: No changes since the last (11/30/08) Quarterly Report.

12. Explain how the selected participants coordinated in the use of their health care networks with the Department of Health and Human Services (HHS) and, in particular, with its Centers for Disease Control and Prevention (CDC) in instances

of national, regional, or local public health emergencies (e.g., pandemics, bioterrorism). In such instances, where feasible, explain how selected participants provided access to their supported networks to HHS, including CDC, and other public health officials.

As stated earlier, the selected participants work closely with HHS's HRSA division, as well as with the Wisconsin Office of Rural Health (also HRSA supported). But no coordination has occurred relating to national, regional, or local public health emergencies.

10/30/08 Update: No changes since last (7/29/08) quarterly report.
1/30/09 Update: No changes since the last (11/30/08) Quarterly Report.

Exhibit A (Network Diagram) and Exhibit B (Sustainability Plan) to follow:

10/30/08 Update: Network diagram has no changes since last (7/29/08) quarterly report. Sustainability plan includes changes as indicated in the plan.
1/30/09 Update: No changes since the last (11/30/08) Quarterly Report.

RWHC ITN Sustainability Plan (Supplement to 1st Quarterly Report)
8-26-08
Updated on 10-30-08
Updated on 1-30-09 (No Changes)

The Pilot Program Order quarterly report requirement includes a question relating to network sustainability. I will begin to address this question (and expect to develop the answers in our future quarterly reports) by focusing on two main areas: (1) Assuming the Pilot Program simply stops (rather than moving from Pilot to some other form), what is the ITN's plan for continued network operation without the 85% FCC contribution? (2) Are there ways the Pilot Program could reinforce sustainability after year 5 (i.e. morph into a regular program) that continue to create benefits for the networks, rural providers, USAC/FCC, and the taxpayer?

1. ITN's plan for continued network operation without the 85% FCC contribution

Background

Whether networks decide to contract with existing carriers (as we have done) or decide to build their own fiber infrastructure, there will be significant cost of network operation after Year 5 of the Pilot Program. Telecommunications cost have and are projected to continue to go down, but the cost of network termination and management equipment and the staff to manage this equipment will be a constant for all networks no matter what their approach.

The greatest challenges in this area will be for networks that are comprised either completely or largely of small rural hospitals (as we are), since these networks will not have a large tertiary center to subsidize network expertise and part of the cost. There is a double edged sword to consider here, as large hospitals that subsidize smaller hospitals tend to expect something in return, even when it is not in the best interest of the small hospital and/or its patients. "Independent" healthcare networks in our view are therefore preferable from a policy standpoint to tertiary subsidized networks, but they will be more expensive for rural facilities to maintain. Policy makers should at least be aware of this dynamic moving forward.

The above said, we feel that sustainability for all networks will ultimately depend on the networks' use-cases for the bandwidth being created. Networks can lay fiber for some theoretical purpose, but if there aren't traffic use-cases that facilities are willing to pay for (at a rate that sustains the network) then networks would be much better off leasing the lines they need than spending the tens of millions on the fiber build.

One of the strengths of the RWHC ITN model is that the use-cases were present before the Pilot Program. With our Shared EHR/HIS project, the facilities and datacenters involved absolutely needed high speed redundant telecommunications

to fulfill their broader plan and vision. Even after a variety of grants and other funding sources are considered, participant hospitals are each investing between $1.5 and $2 million over 5 years in this broader project. Given our dependency on telecommunications, additional telecommunications related costs are expected and can be managed. I will address how we intend to do this in more detail below, but first would like to make the point that ultimately our telecom sustainability really depends on our broader Shared HIS project sustainability, which has been firmly established. I am including the RWHC ITN Business Plan to support this claim.

Year 6 Costs Identified

To address the question of how we intend to continue network operation without the 85% FCC match, we first identified a conservative estimate of Year 6 costs. This estimate (see page 4—Year 6 Projected Telecom/Infrastructure Cost—for detail) included: (1) ongoing telecommunications costs, with USF reimbursement deducted where participants would be eligible, (2) termination equipment refresh costs, (3) termination equipment support costs, (4) network management equipment refresh costs, (5) network management equipment support costs, and (6) staffing costs.

The Year 6 projected cost we arrived at was $319,433.

Managing Year 6 (and beyond) Telecommunications/Infrastructure Costs

One of the best ways we can manage this number is by growing the network (and the Shared HIS Project), since with each additional facility the significant portion of the cost that is divided between facilities (shared staff, network management, and datacenter termination equipment) is divided even further, making it more cost-effective for everyone. So part of our strategy involves adding 2 to 4, and possibly more, facilities over the next 4 years. (See ITN Business Plan for more on this).

To be conservative, our sustainability plan includes (though it does not require) the assumption that we will be adding 2 facility to the Shared HIS environment before year 6. The impact of two new facilities would include: (1) 10-20% reduced costs due to the spreading out of fixed costs (datacenters, servers, and other costs) and (2) the addition of 4 FTEs to the support staff (2 FTEs per facility is the preferred ratio identified in the ITN Business Plan). ***One of those 4 FTEs would be the WAN Specialist position: this would cover $117, 324 of the Year 6 projected $319,433, leaving $202,109.***

Since we were expecting to spend about $1,500,000 over the 4 remaining years of the program, we have already factored 15% of this into our 5 year plan. Thus, $56,250 is currently budgeted and will continue to be budgeted without the need for additional revenue. Once we subtract this number, we are left with an annual $145,859 in added costs.

The remaining $145,859 in added cost is handled by us without the need to raise service fees due to several factors. ***Most importantly, our initial loans for HIS software, hardware, and implementation (these are costs not funded by the FCC***

Pilot Program) ***will be paid off at about the same time that Pilot Program support will end. This will reduce costs by $260,000 annually, which will more than cover the telecommunications cost increase.*** Additionally, if two hospitals join the ITN by Year 6, the 10-20% in reduced costs referenced above will allow us to either reduce service fees or to add services, as determined by the ITN Board, even with the identified telecommunications cost increases.

10/30/08 Update: Conclusion: Through moderate ITN growth and reallocation of service fees dollars from HIS system loan payback to telecommunications infrastructure investment, the ITN is positioned to continue network operations even without continued support from the FCC Pilot Program after Year 5. The telecommunications infrastructure funded by the Pilot Program is required for the ITN Shared HIS model to exist, so it is the firm intention of the current ITN Administrator and CIO (Louis Wenzlow) to advocate this course of action to the ITN Board of Directors, which is the entity that approves annual budgets.

2. Are there ways the Pilot Program could reinforce sustainability after year 5 (i.e. morph into a regular program) that continue to create benefits for the networks, rural providers, USAC/FCC, and the taxpayer

Even as we have defined our sustainability model, we feel it is important to make an argument for continued support after Year 5, even if only for network expansion. Our experience has been that there is a great potential for all parties involved to save $s with the 85%/15% formula (as opposed to the urban comparable rate), since that truly gives facilities an incentive to select the lowest cost solution. (Please see our Quarterly Report for examples and more detail). Also, incentivizing network growth by continuing the program (at least for existing participants that are eligible for USF, and also for expansion projects) will bolster sustainability for all, since certain fixed costs will be spread between more facilities.

Another benefit of the Pilot Program that shouldn't be lost is the ability of networks to take over the paperwork burden for individual facilities, which will ultimately create efficiencies for the hospitals and USAC.

We also believe that supporting network termination equipment, management systems, and staff is one way to alleviate the issue raised on page 1 of this report, as this would empower truly rural networks to provide the kind of security and redundancy required for mission critical healthcare applications without making them dependent on large hospitals. One approach would be to fund network management systems and staff at lower than 85%; say 50%.

There is also a financial reason (improving on the USF model) to support a network's infrastructure. The USF model will pay for any connection by an eligible healthcare provider. This means that one facility can have several separate tele-communications connections, which are all funded, to various partners. Network infrastructure, assuming all partners are on the network, provides the means for

reducing the number of connections to one or two (because facilities can reach multiple providers over a network through a single connection), which can dramatically reduce costs when comparing to the regular program.

Each of these and other areas on this topic should be looked at in detail. We will continue to develop our thoughts in future Quarterly reports.

10/30/08 Update: Participation in a network (assuming that communications partners are on the network) can reduce an individual facility's telecommunications connections from several to one or two, thereby reducing overall USAC costs. This is a rationale for continuing to fund network infrastructure after year 5.

RWHC Information Technology Network
Enhanced Network for Shared EHR

7/11/2008

RWHC ITN Datacenter - Sauk City, WI

Unmanaged Switch

Fortigate 310b

HA

Solar Winds
Network Monitoring

Fax Star

Charter Handoff

Pending Redundant
Handoff

AS400 – HMS
Mimix

100 MB

1.5 MB

RWHC ITN Datacenter - Madison, WI

10 MB

Pending Redundant Handoff

Charter Handoff

Pending
Redundant Handoff

Fortianalizer / Fortimanager

CenturyTel Handoff

Fortigate 310b

HA

Pending Citrix Farm

Unmanaged Switch

Managed Switch

Router

HMS Apps

AS400 – HMS

HMS Print Monitors

World Wide Web

Pending
Redundant
Connections

2 to 5 MB

CenturyTel VLAN

20 MB

LEGEND

Metro Ethernet:

DS3/T-1:

Point-to-Point VPN:

Fiber Optic:

Primary Cat5 Patch Cable:

Redundant Cat5 Patch Cable:

Cat5 Patch Cable:

Non FCC Funded:

FCC Funded:

Tomah Memorial Hospital

Tomah, WI

CenturyTel Handoff

Charter Handoff

Router

Fortigate 200a

HA

Switch

HMS Clients

Memorial Hospital of Lafayette County

Darlington, WI

CenturyTel Handoff

Pending Redundant Handoff

Router

Fortigate 200a

HA

Switch

HMS Clients

St. Josephs Community Health Services

Hillsboro, WI

CenturyTel Handoff

Pending Redundant Handoff

Router

Router

Router

Fortigate 200a

HA

Switch

HMS Clients

Elroy Clinic

Router

Switch

HMS Clients

Wonewoc Clinic

Router

Switch

HMS Clients

Boscobel Area Health Care

Boscobel, WI

CenturyTel Handoff

Pending Redundant Handoff

Router

Cisco PIX

Fortigate 200a

HA

Switch

HMS Clients

Primary and Redundant links
to the RWHC Sauk City DC.

7/11/2008

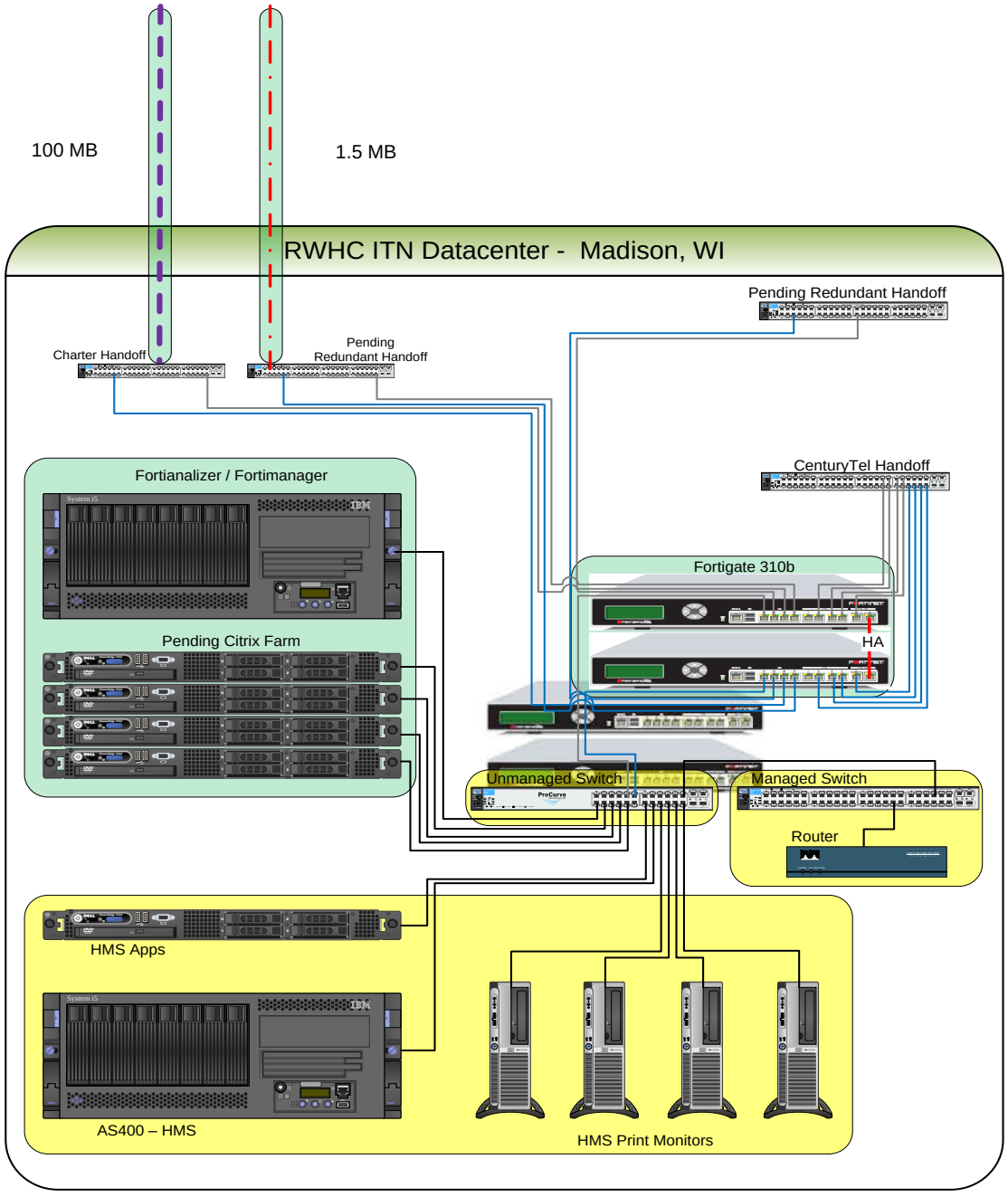

10 MB

20 MB

Primary and Redundant
links to the remote facilities

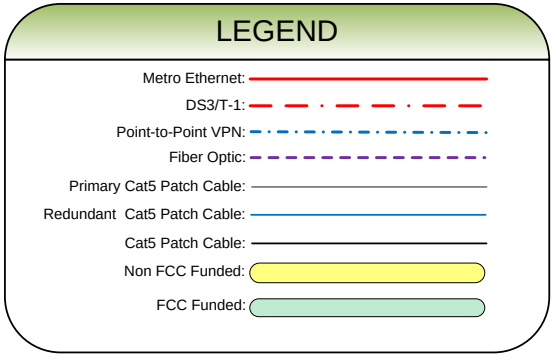

7/11/2008

RWHC ITN Datacenter - Sauk City, WI

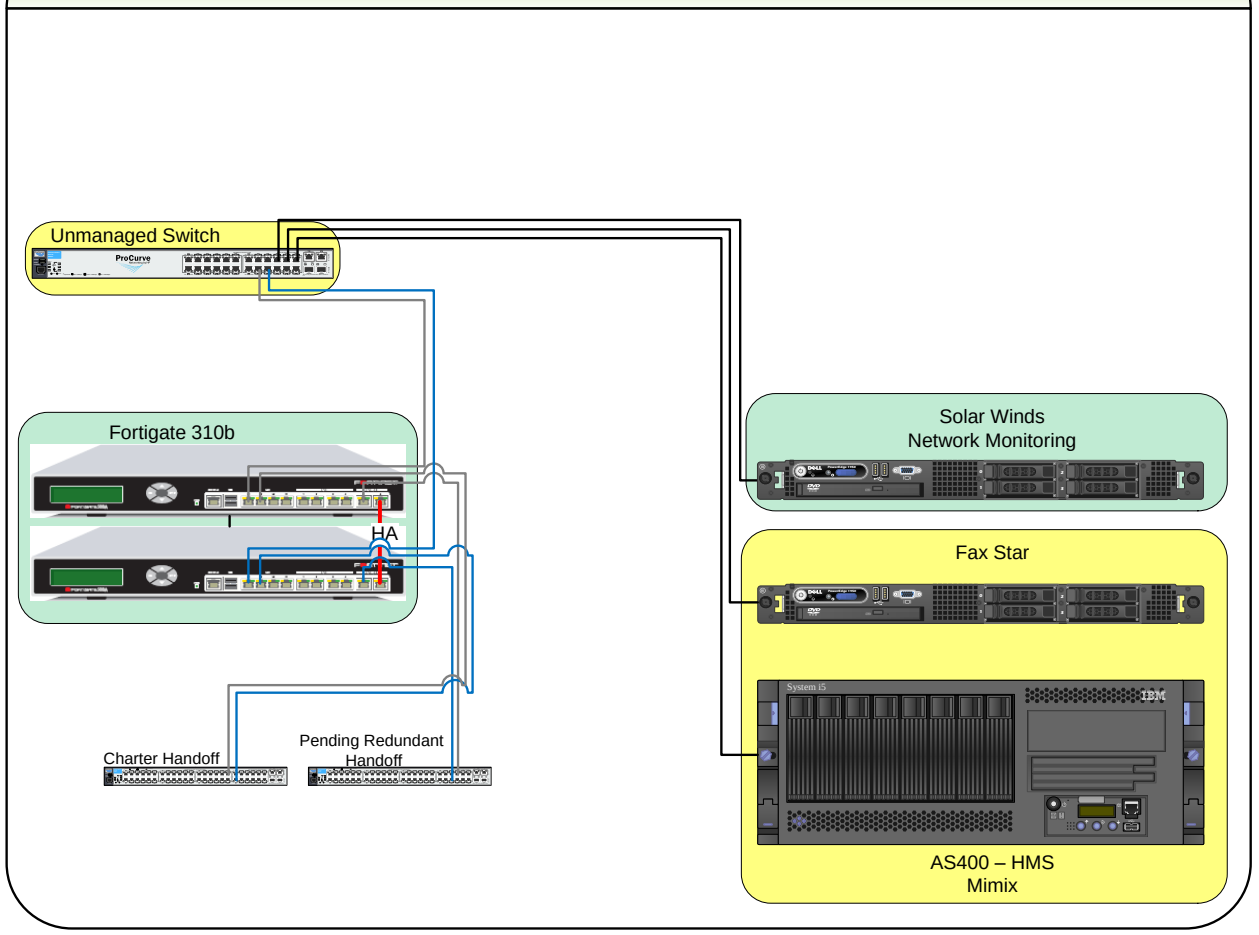

100 MB

1.5 MB

LEGEND

- Metro Ethernet:
- DS3/T-1:
- Point-to-Point VPN:
- Fiber Optic:
- Primary Cat5 Patch Cable:
- Redundant Cat5 Patch Cable:
- Cat5 Patch Cable:
- Non FCC Funded:
- FCC Funded:

Primary and Redundant links To RWHC ITN Datacenter - Madison, WI.

Tomah Memorial Hospital

Tomah, WI

Primary and Redundant links to the RWHC Madison DC.

20 MB

2 to 5 MB

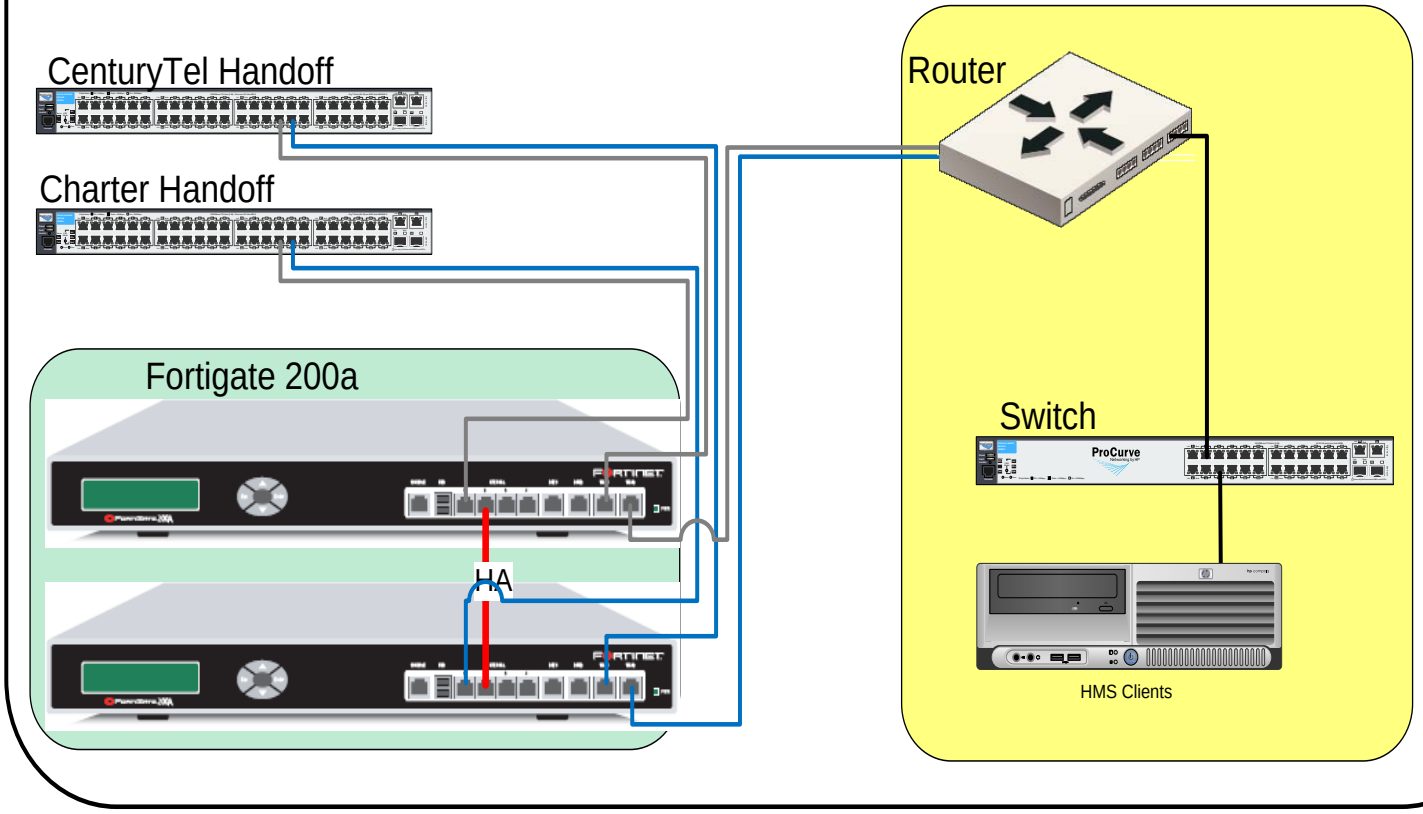

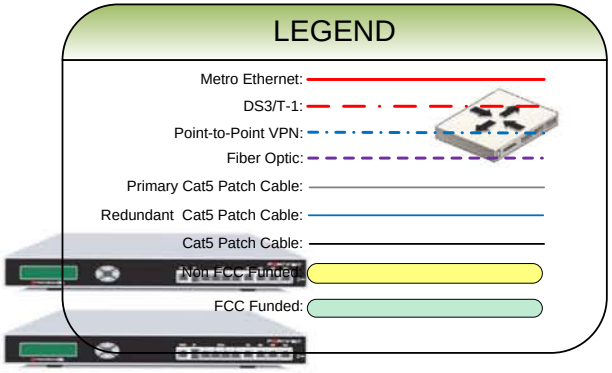

7/11/2008

Boscobel Area Health Care

Boscobel, WI

Primary and Redundant links to the RWHC Madison DC.

20 MB

2 to 5 MB

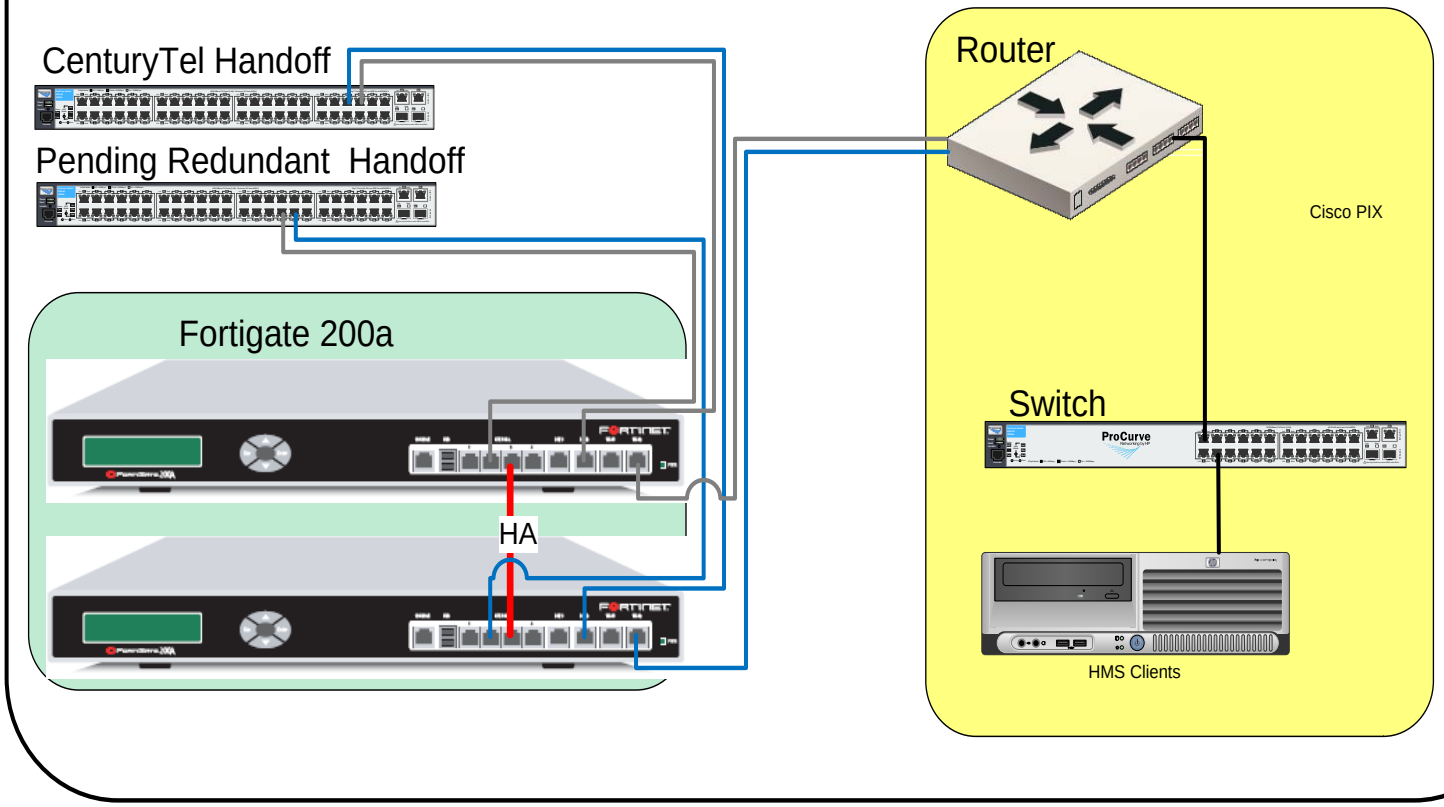

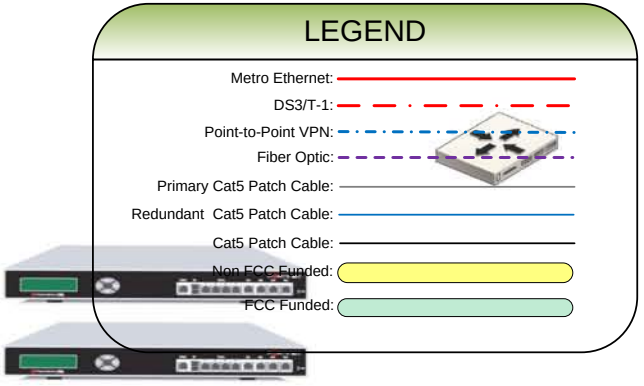

7/11/2008

Memorial Hospital of Lafayette County

Darlington, WI

Primary and Redundant links to the RWHC Madison DC.

20 MB

2 to 5 MB

CenturyTel Handoff

Pending Redundant Handoff

Fortigate 200a

HA

Router

Switch

HMS Clients

LEGEND

Metro Ethernet:

DS3/T-1:

Point-to-Point VPN:

Fiber Optic:

Primary Cat5 Patch Cable:

Redundant Cat5 Patch Cable:

Cat5 Patch Cable:

Non FCC Funded:

FCC Funded:

7/11/2008

St. Josephs Community Health Services

Hillsboro, WI

Primary and Redundant links
to the RWHC Madison DC.

20
MB

2 to 5
MB

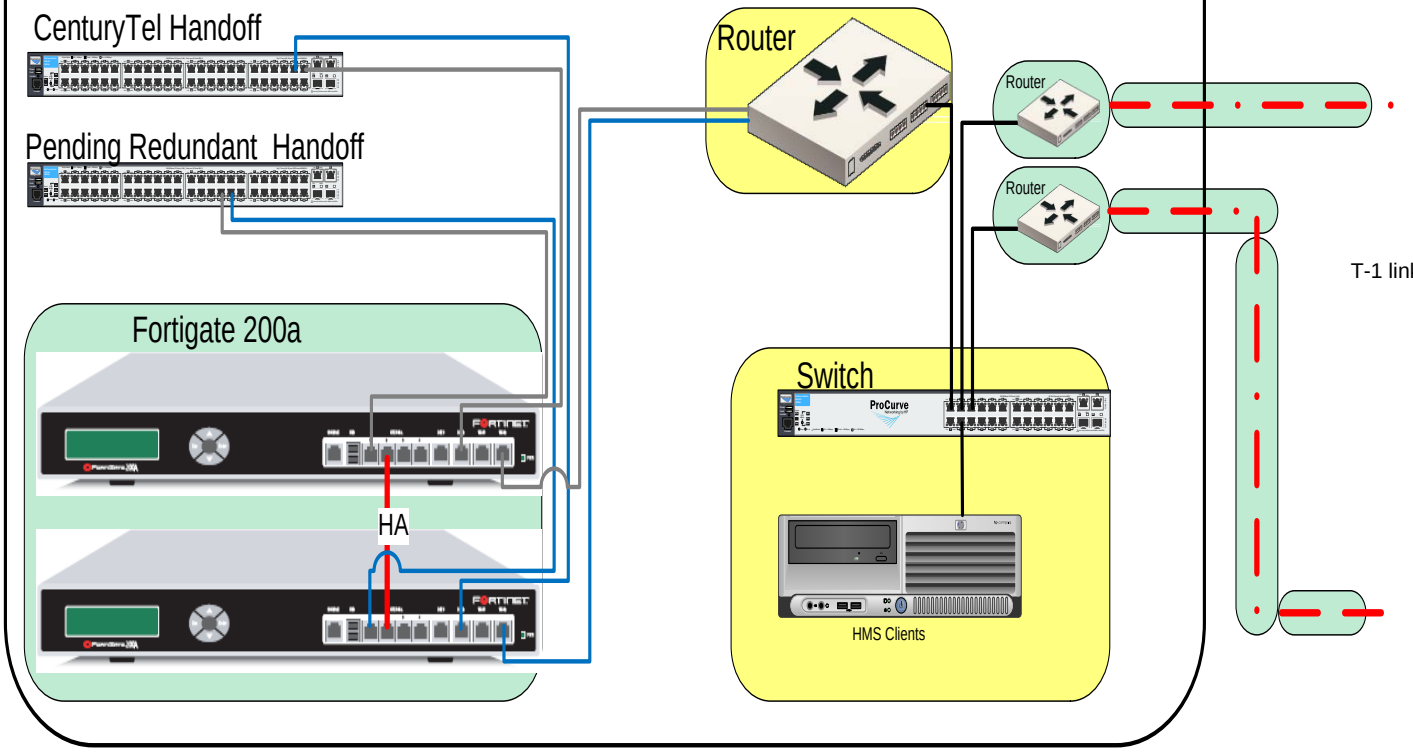

T-1 links to remote clinics

LEGEND

Metro Ethernet:
DS3/T-1:
Point-to-Point VPN:
Fiber Optic:
Primary Cat5 Patch Cable:
Redundant Cat5 Patch Cable:
Cat5 Patch Cable:
Non FCC Funded:
FCC Funded:

7/11/2008

Elroy Clinic

T-1 Link to St. Joseph Community Health Services

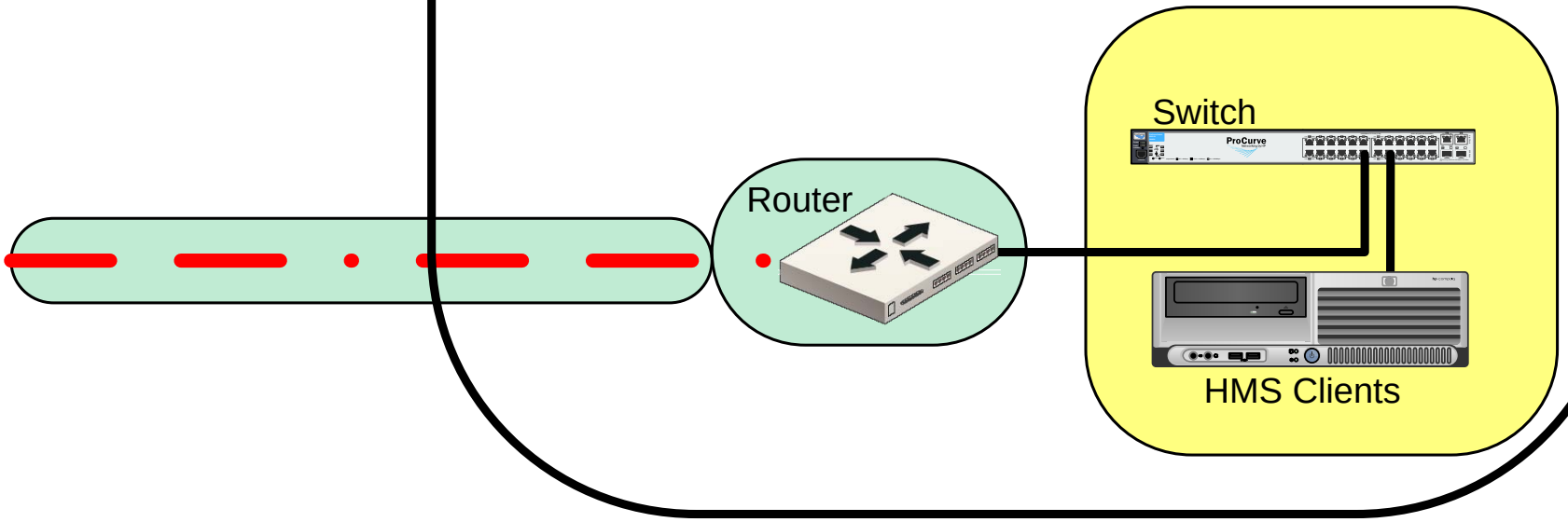

LEGEND

- Metro Ethernet:
- DS3/T-1:
- Point-to-Point VPN:
- Fiber Optic:
- Primary Cat5 Patch Cable:
- Redundant Cat5 Patch Cable:
- Cat5 Patch Cable:
- Non FCC Funded:
- FCC Funded:

7/11/2008

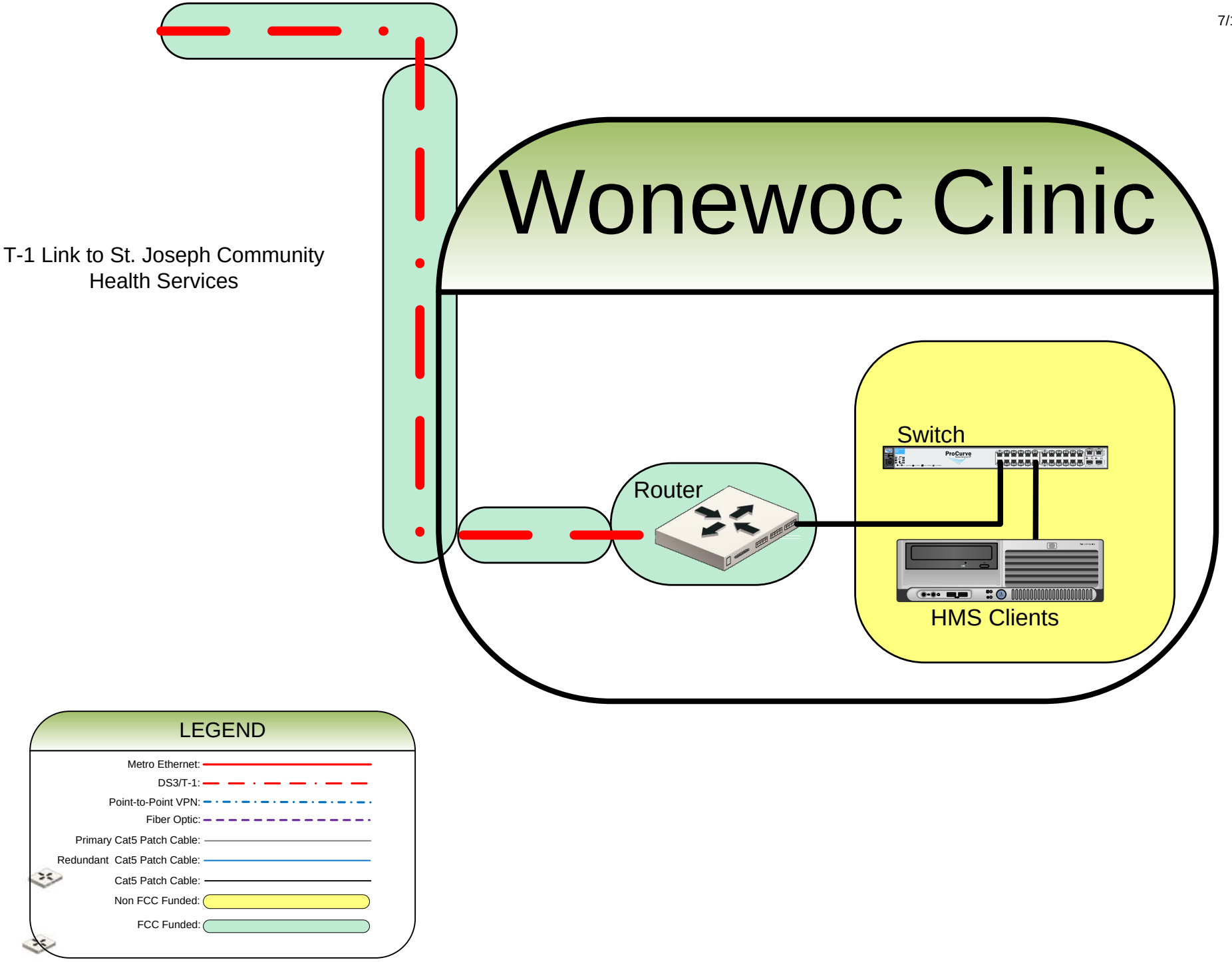
T-1 Link to St. Joseph Community Health Services
Wonewoc Clinic
Router
Switch
ProCurve
HMS Clients
LEGEND
Metro Ethernet:
DS3/T-1:
Point-to-Point VPN:
Fiber Optic:
Primary Cat5 Patch Cable:
Redundant Cat5 Patch Cable:
Cat5 Patch Cable:
Non FCC Funded:
FCC Funded: