Before the
FEDERAL COMMUNICATIONS COMMISSION
Washington, D.C. 20554

In the Matter of	)	
	)	
Unlicensed Operation in the TV Broadcast Bands	)	ET Docket No. 04-186
	)	
Additional Spectrum for Unlicensed Devices Below 900 MHz and in the 3 GG\Hz Band	)	ET Docket No. 02-380
	)	

PETITION FOR RECONSIDERATION AND CLARIFICATION OF
THE NATIONAL CABLE & TELECOMMUNICATIONS ASSOCIATION

William A. Check, Ph.D.
Senior Vice President
Science & Technology

Andy Scott
VP, Engineering
Science & Technology

Neal M. Goldberg
Loretta P. Polk
Counsel for the National Cable & Telecommunications Association
25 Massachusetts Avenue, N.W. – Suite 100
Washington, D.C. 20001-1431

March 19, 2009

TABLE OF CONTENTS

INTRODUCTION AND SUMMARY 1

Direct Pickup Interference 3

Cable Headend Interference 5

DISCUSSION 6

THE CARL T. JONES FIELD TESTS, AND THE RECORD IN THIS PROCEEDING, SHOW THAT TV BAND DEVICES WILL CAUSE HARMFUL DIRECT PICKUP INTERFERENCE TO CABLE SERVICES UNDER THE CURRENT RULES 6

THE RULES PROVIDE INADEQUATE PROTECTION TO CABLE HEADENDS FROM TV BAND DEVICES AND SHOULD BE CLARIFIED AND MODIFIED TO PROTECT ALL CABLE HEADENDS, REGARDLESS OF LOCATION 14

CONCLUSION 18

Before the
FEDERAL COMMUNICATIONS COMMISSION
Washington, D.C. 20554

In the Matter of	)	
	)	
Unlicensed Operation in the TV Broadcast Bands	)	ET Docket No. 04-186
	)	
Additional Spectrum for Unlicensed Devices Below 900 MHz and in the 3 GG\Hz Band	)	ET Docket No. 02-380
	)	

PETITION FOR RECONSIDERATION AND CLARIFICATION OF
THE NATIONAL CABLE & TELECOMMUNICATIONS ASSOCIATION

The National Cable & Telecommunications Association ("NCTA"), pursuant to Section 1.429 of the Commission's rules, 47 C.F.R. § 1.429, hereby petitions for reconsideration and clarification of the Commission's Second Report and Order and Memorandum Opinion and Order ("Second Report and Order") adopted November 4, 2008 in this proceeding. NCTA is the principal trade association of the cable television industry. Its members provide video programming, broadband Internet, wireline phone, and other services throughout the United States. NCTA also represents programmers and suppliers of equipment to the cable television industry.

INTRODUCTION AND SUMMARY

In the Second Report and Order, the Commission struck what it believed to be the appropriate balance between the development of new unlicensed devices that provide broadband services and the protection of "incumbent television and other authorized services that operate in the TV bands."[1] It adopted rules to allow unlicensed radio transmitter devices, both fixed and

[1] *In the Matter of Unlicensed Operation in the TV Broadcast Bands*, ET Docket No. 04-186, 02-380, Second Report and Order and Memorandum Opinion and Order, rel. Nov. 14, 2008 at paragraph 2 ("These new rules will allow the development of new and innovative types of unlicensed devices to provide broadband data and other services . . . without disrupting the incumbent television and other authorized services that operate in the TV bands.").

personal/portable, to operate in the so-called "white spaces," *i.e.* unused channels in the broadcast television spectrum, in a manner that it believes will not harm existing services.

Specifically, the new rules authorize operation of two types of unlicensed white spaces devices, also called TV band devices ("TVBDs"), that may provide broadband data and other types of communications services: fixed devices and personal/portable devices. A fixed device must employ both geo-location/database access and spectrum sensing capabilities to enable the device to know its location and theoretically identify which channels are unoccupied in the broadcast spectrum. A personal/portable device may operate either by 1) employing geo-location/database access and spectrum sensing or 2) being under the control of a fixed device or a personal/portable device that employs geo-location/database access and spectrum sensing.[2] Subject to certain channel restrictions, personal/portable devices may transmit up to 100 milliwatts ("mW") of power, except on channels adjacent to a channel being used for broadcast TV, which are authorized at 40 mW. Fixed devices may operate at up to 4 Watts EIRP (effective isotropic radiated power).

In adopting these rules, the Commission heavily weighted its decision on the side of promoting new wireless broadband services in the TV broadcast band and, while purporting to take into account any adverse effect on broadcasters, it gave little regard to the impact on existing and up and coming cable services. Indeed, the Commission failed in several major respects to adopt precautions to protect cable consumers from proven harmful interference from white spaces devices. First, by virtually ignoring significant evidence in the record of direct pickup ("DPU") interference, the Commission completely missed the mark on avoiding the

[2] *Second Report and Order* at ¶ 6. The Commission also adopted rules to allow for certification of personal/portable devices that do not include geo-locations and database access capabilities and are not controlled by another device but rely solely on spectrum sensing.

disruption of television viewing and other services in cable households. As discussed below, the 100 mW power output level adopted for personal/portable devices will interfere with cable television viewing, especially in adjoining housing units, and could adversely impact cable modem Internet access and other cable services in the home. Second, while the Commission took several important steps to mitigate potential harmful interference to cable headend facilities that bring distant broadcast signals to communities, especially in rural areas, its cable headend protections are inadequate and some provisions need further clarification.

Following the release of the Second Report and Order, NCTA commissioned Carl T. Jones Corporation ("CTJ") to conduct two field studies: 1) to test several of the assumptions and justifications made by the Commission in reaching its decision that direct pick up interference is not sufficiently serious to warrant a reduction in the power of personal/portable devices and 2) to assess the adequacy of the headend protections provided to cable operations under the new rules. The test reports and an analysis of the test results prepared by David Large are attached to this petition.[3]

Direct Pickup Interference

The CTJ field studies, conducted under carefully controlled conditions, make definitively clear that cable operations will be subjected to harmful interference from white spaces devices as specified in the new rules. The CTJ study shows that DPU interference from a 100 mW white spaces-type device will occur in a television receiver at an even greater distance – 80 feet – than

[3] David Large Consultants, Inc., "Field Tests to Assess Adequacy of Protections Afforded Cable Television Operations from White Spaces Devices," (Mar. 18, 2009) ("Large Report"); Appendix I, Carl T. Jones Corp., "Test Results Report, TVBD DPU Interference, December 2008" (Dec. 2008); Appendix II, Carl T. Jones Corp., "Test Results Report, Television Band Devices Direct Pickup Interference, January 2009"; Appendix III, Carl T. Jones Corp., "Test Result Comparison Report, Television Band Devices Direct Pickup Interference, CATV drop cable ingress issue, December 2008 – January 2009"; Appendix IV, David Large, "Field Tests Assessing the Adequacy of the New White Spaces Rules with Respect to Avoiding Co-Channel Interference with Cable System Headend Reception" (Mar. 16, 2009); Appendix V, Carl T. Jones Corp., "Report on Fredericksburg Head-End Measurement Program" .

what NCTA originally predicted (65 feet).[4] Both the CTJ and initial NCTA analyses took into account signal attenuation from an intervening wall. This means that cable services will suffer significantly – in the form of a noisier picture to the complete drop off of the picture in the case of digital signals – as a result of signal ingress from TVBDs operating as far as several rooms away. Customers also could experience interference to their cable modem and digital telephone service.

NCTA is not seeking absolute protection from interference. On reconsideration, and based on field tests addressing the Commission's justifications for its new rules, the industry simply seeks a *lowering* of the power output to minimize the adverse effects of such devices on the 67 million households that receive their television and broadband services via cable. Given the well-documented disruptive effects on existing cable services, especially in adjacent housing units where the customer has no control over signals emanating from another unit, this is the most sensible policy decision. If these devices are deployed in the marketplace under the Commission's current rules, cable customers will be frustrated and angered by the inability to effectively mitigate the interference to their cable service. And, as we discuss below, none of the Commission's caveats and rationalizations dismissing the extent of DPU interference change this conclusion.

In addition to the interference risks from personal/portable TVBDs, the CTJ tests demonstrate that fixed white spaces devices authorized to operate at 4 W pose significant hazards for cable services. Interference to cable services can occur from a fixed device operating at 4 W

---

[4] *See* "Analysis of the FCC Laboratory's Report on Direct Pickup Interference Testing," David Large Consultants, Inc., attached to NCTA Comments, August 15, 2007; NCTA Reply Comments, filed March 2, 2007, n. 2 (using 0 dBi unlicensed device antenna gain and scaled to the distances used in the FCC tests); *see also* "The Potential Adverse Effects of Unlicensed Operation of New Devices in TV Broadcast Bands on Cable Customers' Reception of Cable Service," David Large Consultants, Inc., NCTA Comments, January 31, 2007, Appendix I.

as far as 1000 feet away.[5] We urge the Commission to reconsider its decision and require white spaces operators to maintain a minimum separation of 400 feet between the fixed device installation and buildings serving cable households. In densely populated areas, where such separation may be more difficult, the Commission should require that the power output of such devices be limited to 1 W in order to allow closer spacing.

Cable Headend Interference

With regard to cable headend interference, NCTA seeks clarification of several discrepancies between the text of the Second Report and Order and the rules, particularly asking the Commission to make clear that the relevant reference point for determining the headend protection zone is the receive site, or the headend receiving antenna, and not the TV station contour boundary.

CTJ's tests of interference to the reception of DTV signals at cable headends show that the protections provided in the new rules are insufficient for rural headends in marginal signal areas using tall towers. Second, headends located within TV stations' protected contours will need adjacent channel protection from nearby portable devices and, depending on location, may need greater protection from white spaces devices transmitting from outside the contour than is provided in the current rules. Third, the width of the "wedge" of the defined protection area is not adequate for most receiving antenna patterns. Fourth, any headends delivering cable service that are located beyond the 80 km protected contour boundary of a received station deserve as much protection as any other cable headend. There is no reason to deny protection to cable customers in communities served by remote headends.

[5] Large Report at 1.

Therefore, NCTA urges the Commission on reconsideration to adopt four changes to the current rules to provide an appropriate level of protection for cable headends: 1) allow any headend to register in the database, regardless of location; 2) widen the "wedge" in the keyhole-shaped protection area defined in the rules from ± 30 degrees to ± 50 degrees; 3) provide a simple process whereby operators of headends for which the defined protection areas are not sufficient due to low received signal levels, tall towers, or other factors, to define an adequate protection area; 4) require operators of fixed white spaces devices to coordinate with the operators of all cable headends whose operations might be affected by transmissions from their devices.

DISCUSSION

THE CARL T. JONES FIELD TESTS, AND THE RECORD IN THIS PROCEEDING, SHOW THAT TV BAND DEVICES WILL CAUSE HARMFUL DIRECT PICKUP INTERFERENCE TO CABLE SERVICES UNDER THE CURRENT RULES

Personal/Portable Devices

The potential harmful effects of unlicensed TV band devices was established by the FCC's Office of Engineering and Technology ('OET") in both laboratory and field tests. OET found that unlicensed devices operating at very low output power, as low as 5 mW, will disrupt cable service in the home.[6] NCTA's technical analyses predicted virtually the same result.[7]

---

[6] *See* "Direct Pickup Interference Tests of Three Consumer Digital Cable Television Receivers Available in 2005," FCC Office of Engineering and Technology Laboratory, released July 31, 2007 at iii. In addition to DTV receiver interference, the Commission should take into account that approximately 116.5 million analog television sets (and approximately 80.2 million VCRs) that are in cable households today will be subject to interference. Data from SNL Kagan, 3Q 2008 and cable MSO industry benchmarks (online), SNL Kagan, The State of Home Video, 2008 edition, p. 29.

[7] S*ee* "Analysis of the FCC Laboratory's Report on Direct Pickup Interference Testing," David Large Consultants, Inc., attached to NCTA Comments, August 15, 2007; NCTA Reply Comments, filed March 2, 2007, n. 2 (using 0 dBi unlicensed device antenna gain and scaled to the distances used in the FCC tests); *see also* "The Potential Adverse Effects of Unlicensed Operation of New Devices in TV Broadcast Bands on Cable Customers' Reception of Cable Service," David Large Consultants, Inc., NCTA Comments, January 31, 2007, Appendix I. David Large has held senior engineering positions with various cable companies during his 35-year career in the industry.

Despite this evidence, the Commission, relying on various assumptions, was "not persuaded at this time that the risk of DPU interference is sufficiently great to warrant a reduction in power."[8]

In response to the Commission's analysis of the direct pickup issue, NCTA commissioned comprehensive field tests to further document in a carefully controlled setting the extent of direct pick up interference. Carl T. Jones Corporation conducted a study on the sensitivity of analog and digital television receivers to white spaces-type devices operating in accordance with the specifications in the rules. (The first round of tests focused on television receivers with associated wiring and the second round of tests focused on testing receivers isolated from wiring.)

The analog and digital television receivers used in the test included those capable of both digital and analog reception and analog-only reception.[9] Measurements were made on the receivers at four orientations and two polarities in order to take into account varying orientations of the receiver and polarities of white spaces device transmissions.[10] The studies confirm, without question, that under the new rules, cable customers will experience harmful interference to their video programming, and most importantly, such interference will extend into adjacent housing units, *where the cable customer has no control over the interfering device*. In particular, the CTJ studies found that 100 mW personal/portable white spaces-type devices will cause interference to television receivers *80 feet away, through an intervening wall*.[11]

As explained by Mr. Large in the attached report on the test results, this interference is attributable to two effects. First, many television receivers do not meet the Part 15 shielding

---

[8] Second Report and Order at ¶ 126.

[9] Carl T. Jones Corp., Appendix I, "Test Results Report, TVBD DPU Interference, December 2008", Section 2.6 entitled "Test Receivers" (Dec. 2008); Large Report at 3.

[10] *Id.*

[11] Large Report at 9.

requirements.[12] Mr. Large's earlier predictions were based on the assumption that today's receivers meet that requirement.[13] Second, "and more seriously, these tests showed that the presence of coaxial drop cables and connectors within the interfering signal's field materially affected the sensitivity of customers' installations to interference."[14] This is a critical point because this interference "occurred despite the use of higher quality cable than typically installed by professional cable installers and much higher quality cable and connectors than typically installed by customers themselves."[15] Consumer in-home wiring is wholly inadequate to guard against signal ingress from 100 mW white spaces devices.

In the face of this overwhelming field evidence – inadequate receiver shielding in both analog and digital receivers combined with the susceptibility of cabling and connectors of even the highest quality to interference at distances up to 80 feet – it is hard to deny the magnitude of the direct pick up issue. Yet the Commission determined in the Second Report and Order, based on a variety of assumptions, that a personal/portable device operating at 100 mW would not cause destructive interference to cable television viewing and other cable services in the home or in adjoining properties.

The Commission starts its brief direct pickup interference analysis by acknowledging that:

> the tests described in our report on direct pickup interference to three digital cable ready receivers and the anecdotal tests performed by our engineers in the

---

[12] Large Report at 11.

[13] "The Potential Adverse Effects of Unlicensed Operation of New Devices in TV Broadcast Bands on Cable Customers' Reception of Cable Service," David Large Consultants, Inc., NCTA Comments, Jan 31, 2007, Appendix I.

[14] Large Report at 7.

[15] *Id*. at 7; *see also* Motorola Whitepaper, "Shielding Effectiveness of In-Home Cable TV Wiring and Splitters", submitted in an *ex parte* presentation to the FCC on December 6, 2007, ET Docket Nos. 04-186 and 02-380; OET observations in "Evaluation of the Performance of Prototype TV-Band White Space Devices, Phase II," October 15, 2008.

> laboratory and field tests in our second series of tests of white space developmental devices indicated that there is some potential for direct pickup (DPU) interference to cable service from TV white space transmitters.[16]

But it goes on to qualify the findings on several grounds.

First, the Commission notes that the interference "occurred at relatively close spacings within the user's premises and could be corrected by removing consumer-installed splitters and wiring that effectively reduce the shielding to interfering signals as well as reduce the desired signal levels available at the TV receiver."[17] Further, it asserts that "consumers generally should be able to correct any interference to their own devices by increasing the separation, re-orienting the devices, or using wiring with improved shielding."[18] But even assuming a customer is willing to accept stationing electronics devices wide distances apart (including portable devices) in order for them to function effectively and take other steps to rectify interference in his own home, this does not address white spaces device signals that penetrate the walls shared by adjoining apartments, townhouses, or other housing units and cause interference.

Indeed, the Carl T. Jones field tests show that in an adjacent apartment scenario, the distance between a television receiver and a portable white spaces device operating at 100 mW would have to be *more than 80 feet away* to avoid interference. This is substantially greater than what was predicted by David Large in his earlier technical analyses, which assumed modern receivers complied with Part 15 shielding requirements (65 feet assuming 5 dB attenuation in the intervening wall). And it is hardly the "relatively close spacing" that was described as the threshold for interference in the Commission's field tests. CTJ's tests demonstrate serious interference created by one household into the homes of other people who would typically have

---

[16] Second Report and Order at ¶126.

[17] *Id.*

[18] *Id.*

no knowledge of the source of the interference, nor the knowledge of how to mitigate it. In fact, cable customers experiencing degraded video pictures are more likely to assume the problem rests with their cable provider than a neighbor.

Furthermore, with respect to the Commission's view that interference can simply be "corrected by removing consumer-installed splitters and wiring that effectively reduce the shielding to interfering signals as well as reduce the desired signal levels available at the TV receiver,"[19] Mr. Large explains that the CTJ test site optimized the residential cable installation by eliminating all components with the exception of the connecting cable itself. And still harmful interference occurred. While use of an external converter might alleviate or reduce the interference, even a converter box may not solve the problem, as OET itself found in its field tests. As CTJ's tests showed, the wiring and connectors are a major problem. Moreover, many cable customers resist set-top equipment and Commission policies favor incorporating cable set-top box functions into cable-ready receivers.[20]

With regard to interference observed between devices on separate sides of a wall in the FCC's field tests, the Commission finds the location of the television receiver to be a mitigating factor, *i.e.* interference "was also a function of the physical relationship between the devices, such as whether the interfering signal was located towards the front or rear of the TV receiver."[21] But while the back of the TV set may be more sensitive than the front, no one could be expected to turn the picture toward the wall and, in the real world, an innocent resident experiencing interference would not be "expected to rearrange his furniture to move the TV to a different location" or "remove a signal splitter and thus forego a second outlet or use of a digital video

---

[19] *Id.*

[20] 47 C.F.R. § 76.640, which defines the technical standards that enable the elimination of cable boxes.

[21] Second Report and Order at ¶ 126.

recorder."[22] And what about signal pickup in wires buried in the wall between apartments? In short, as a practical matter, the Commission's reliance on a consumer in an adjoining household re-locating the television receiver or taking other measures to ameliorate direct pickup interference emanating from another household is unreasonable and at best wishful thinking.

The Commission's next rationale to support authorizing high-powered personal/portable TVBDs is that such devices are required to use dynamic power reduction. This too is not a solution for adjacent households. The Commission asserts that "in locations in townhouses and apartments where the operating distances are apt to be relatively short, the power level would typically be adjusted automatically to less than the maximum permitted power of 100 mW."[23] But there is nothing in the new rules to require such action. They only require that transmit power be reduced to a level to ensure reliable communications, not to avoid interference. The Commission's rules provide no parameters or specifications on how output power levels are determined in the dynamic power control mechanism. Moreover, as described by Mr. Large:

> Given that portable devices, in particular, may well be communicating with externally-located fixed base stations, and that the difference in received signal between an external antenna 10 meters above the ground and a portable white spaces device within a building might be as high as 39.5 dB (as discussed in paragraph 76 of the R&O), it seems likely that portable devices might frequently be operating at or near their maximum permitted transmit power when communicating with a fixed device with such an external antenna location.[24]

Finally, the Commission expresses its intent to proceed "cautiously" with the introduction of TVBDs, including "conservative controls on their operation" and a rigorous certification

---

[22] *Id.* The Commission also "expect[s] the equipment suppliers to cooperate in helping consumers to rectify any such interference." *Id.* But we do not see how this is a feasible approach.

[23] *Id.*

[24] Large Report at 6.

process for signal sensing-only devices.[25] As NCTA has pointed out in this proceeding, however, spectrum signal sensing and database access capabilities have *no* impact on DPU interference since cable operators typically use all of the channels in the broadcast spectrum. In other words, in the cable environment, there are no unoccupied channels to sense or to look up in a database. Thus, these features provide no protection for cable delivery of programming, Internet access and other services from direct pickup interference.

As the Commission has previously observed in this proceeding and again in the Second Report and Order, where caution *is* needed is in authorizing personal/portable devices:

> Personal/portable devices pose a greater risk of interference to licensed TV band services because the locations where these non-fixed devices are used will change, making the task of determining unused TV frequencies by the devices more complicated. In addition, the transitory nature of such devices makes it difficult for others to identify the devices if they cause interference.[26]

But, in the end, the Commission did not take its own concerns into account in assessing cable's direct pickup interference evidence and in formulating its white spaces device rules. It essentially ignored the seriousness of the problem.

In summary, the Commission's rules do not provide the protections it assumed to exist in adopting its new rules. The Carl T. Jones tests of DPU interference by cable customers' television receivers demonstrate that interfering signals from white spaces devices can reach as far as 80 feet into an adjoining housing unit. Moreover, based on the two rounds of tests, this interference can occur due to receiver shielding limitations, interconnecting wiring, or a combination of the two factors. Reducing the maximum transmit power allowed for portable

---

[25] Second Report and Order at ¶ 123. FCC also notes that "cable systems are rapidly moving to digital technology which should further alleviate the potential for interference." *Id.* at ¶ 126. However, most cable systems still have analog tiers and will serve analog households for a long time to come. And, as noted previously, there is an embedded base of approximately 116.5 million analog television sets in households today.

[26] *Id.* at ¶ 122.

devices is the only reasonable course for the Commission to avoid harmful interference to cable viewing in adjacent housing units. The potential for interference, as we have shown, occurs as low as 5 mW power output. But in the interest of allowing new as-yet-defined wireless services, the cable industry will meet the proponents of these devices half-way. We believe that an acceptable compromise is a maximum power output of 50 mW for personal/portable devices. We urge the Commission to adopt this power output level on reconsideration.

Fixed Devices

The interference concerns in the new rules do not end with portable devices. Fixed white spaces transmitters, which have a higher EIRP and are permitted to operate on VHF channels, pose an even more serious problem for cable subscribers. The CTJ tests show that given the high degree of susceptibility of television receivers, fixed white spaces transmitters can cause significant interference to television sets as far away as 1,000 feet.[27] This distance takes into account an external building wall, although the situation may be worse in light of the extensive aerial mounting of drop cables and routing on building exteriors, which effectively eliminate exterior wall attenuation. Moreover, with no minimum height or prohibition against interior installations in the rules, fixed white spaces transmitters may be mounted in interior hallways of apartment buildings and use maximum power to reach as many units as possible.[28]

Accordingly, the Commission should reconsider its decision and adopt a minimum separation requirement of 400 feet between the fixed 4 W white spaces transmitter and buildings served by cable systems. In urban areas, where there may be difficulty maintaining such separation effectively, the Commission should require fixed devices to operate at no higher power than 1 W.

---

[27] Large Report at 1.

[28] *Id*. at 10; s*ee also* Motorola *ex parte* presentation, ET Docket No. 04-186, 02-380, filed December 7, 2007.

THE RULES PROVIDE INADEQUATE PROTECTION TO CABLE HEADENDS FROM TV BAND DEVICES AND SHOULD BE CLARIFIED AND MODIFIED TO PROTECT ALL CABLE HEADENDS, REGARDLESS OF LOCATION

In the Second Report and Order, the Commission took steps to protect cable headends receiving distant broadcast signals from interference from white spaces devices. The most significant steps are requiring all devices (except portable devices operating in client mode) to include a geo-location capability and establishing a database of protected facilities and radio service based on location and other information. White spaces devices must first access the database over the Internet to obtain a list of eligible channels before operating.

As the Commission recognizes, cable headends often "use an antenna with high gain mounted high up on a tower to receive a TV station's signals well beyond the station's service area in a manner similar to that used by TV translators."[29] In light of these circumstances, the Commission adopted important measures to protect these facilities, but as the rules currently stand, they are insufficient for rural headends "in marginal signal areas using tall towers."[30] We discuss these inadequacies and certain discrepancies in the rules below.

Under the database system, cable operators are permitted to register their headends and in return are allocated a keyhole-shaped protection area for each channel received, and a smaller protection area for channels adjacent to the main received channel. However, the language in the text of the Order and the language in the rules contradict each other in several respects. First, paragraph 186 of the Order describes the protected zone as "limited in distance to 80 kilometers from the *[station's] protected contour* for co-channel operation and to 20 kilometers for adjacent

[29] Second Report and Order at ¶ 182.

[30] Large Report at 1.

channel operation."[31] On the other hand, section 15.712(b) of the rules appropriately references the protection distances from the *receive site*, *i.e.* the cable headend. It is the receiving headend antenna, not the TV station, that should be the reference point for protection in these circumstances. Thus, the protection boundary should be measured from the cable headend's location rather than from the edge of the TV station's contour. We urge the Commission to clarify this critical point.

Second, paragraph 187 of the Order contains language that denies protection to cable headends (or TV translators) located more than 80 km outside a station's protected contour, whereas section 15.713(c) of the rules does not restrict such protection. While the 80 km zone may be effective for the majority of cable headends, there is no reason to deny protection to a headend serving a rural area outside this boundary where the receive site, as shown above, is the relevant location to be protected. As the Commission recognizes, "viewers are in fact located beyond the areas where we normally protect TV services, in these cases TV services have *de facto* been extended and valuable service is being provided to a significant number of households."[32] It is important to avoid disruption of TV service to households located beyond TV station service areas. We ask the Commission, therefore, to clarify this provision.

Third, the Commission on reconsideration should modify the rules based on the tests conducted by CTJ and David Large on the sensitivity of cable headend facility reception of over-the-air broadcast signals to TVBD transmissions. The CTJ tests, based on the new FCC rules, which were conducted in a typical suburban setting, demonstrate the scope of potential

---

[31] *See also*, Second Report and Order at ¶ 187 (emphasis added), where the Commission states "again, this protection will be afforded only to TV translators and cable headends located within 80 kilometers of a TV station's service area."

[32] Second Report and Order at ¶ 185.

interference to over-the-air reception of distant broadcast signals whether inside *or* outside the Grade B contour of the television station.

In the rules, the Commission precluded cable headends located inside the protected contour of the TV station from registering in the database.[33] But cable headends inside a station's protected zone require protection when nearby white spaces devices transmit on adjacent channels. As discussed by Mr. Large, even at 40 mW on an adjacent channel, a white spaces device can cause interference at distances up to 490 meters from the headend if within the main beam of the antenna or up to 80 meters if outside the main beam.[34] NCTA urges the Commission to adopt a provision that protects cable headends in the adjacent channel scenario.

The rules should allow all headends to register in the database, regardless of location. In particular:

> In the case of headends located within the protected contours of television stations, this will provide the required protection from the adjacent channel operation of portable devices, as well as increased protection from operation of white spaces devices operating just outside the "buffer zone" beyond the protected contour.
>
> In the case of headends located more than 80 km from the protected zone boundaries, it will provide required protection for operators who must use exceptionally tall towers (or similar antenna locations) and deal with very low received signal levels.

There is no evidence that extending headend registration to all headend facilities, whether inside or outside the protected contour of the TV station being received, will lead to "unnecessary entries."[35] And this is particularly the case where the operation and maintenance of the database is still to be defined.

---

[33] *Id.* at ¶ 187 and § 15.713(c) (restrictions on registration).

[34] Large Report at 16.

[35] Second Report and Order at ¶ 187.

In addition, the width of the "wedge" of the defined protection area is not adequate for most receiving antenna patterns. The Commission should increase the width of the "wedge" in the keyhole-shaped protection zone to ±50 degrees from the receiving antenna azimuth and increase the co-channel protection radius outside the wedge to at least 13 km. This will better match the azimuth range of typical receiving antennas at which the response has not been attenuated to the specified side and rear rejection ratios and will increase the side/back protection to the levels required for protection against portable devices when desired DTV signals are at or above 41 dBu. Together, these two changes will reduce the number of cases where a protection area greater than the default specified in the rules is required.

The rules should also define a clear mechanism whereby cable operators can receive a greater protection area upon making a technical showing of certain factors requiring greater protection distances than those provided in the rules. Such factors might include an antenna configuration leading to greater line-of-sight distances or reduced sidelobe attenuation, low received signal levels, exceptional fading conditions, or field tests which demonstrate susceptibility to TVBD signals originating from beyond the boundaries defined in the rules.

The Commission also should require operators of fixed white spaces devices to coordinate with the operators of all cable headends whose operations might be affected by the transmissions from their devices. Identifying those headends can be quite simple, provided all headends are allowed to register. The database host could then provide the TVBD operator the contact information for all headends within 100 km of the fixed TVBD. A simple channel-by-channel test, with the white spaces device signal measured at the headend, could determine if a problem exists. Such a procedure could prevent unexpected reception loss to entire communities

when new TVBDs are installed, followed by the lengthy process of identifying the interfering device, filing a complaint, and resolving the interference after the fact.

Finally, NCTA urges the Commission to require a geo-location/database system for all TVBDs. The Commission contemplates a special class of 50 mW devices that will not be required to include geo-location capability or to utilize the database to determine eligible channels in the geographic area. For all of the reasons identified by the Commission, and discussed in NCTA's previous filings, a geo-location/database system is essential for all fixed and portable white spaces devices. As discussed in the Large Report attached, the CTJ tests show a high likelihood that even 50 mW devices which depend solely on signal sensing will cause harmful interference to headend reception from a considerable distance. There is no reason to carve out an exception for such devices.

CONCLUSION

NCTA continues to support the introduction of new wireless communications devices in the TV bands, *provided* the rules fairly balance the benefits of such devices with protecting cable customers from harmful interference to their video programming and broadband services. NCTA urges the Commission, on reconsideration, to clarify and modify its rules as described above.

Respectfully submitted,

/s/ Neal M. Goldberg
Neal M. Goldberg
Loretta P. Polk
Counsel for the National Cable & Telecommunications Association
25 Massachusetts Avenue, N.W. – Suite 100
Washington, D.C. 20001-1431

William A. Check, Ph.D.
Senior Vice President
Science & Technology

Andy Scott
VP, Engineering
Science & Technology

March 19, 2009

ATTACHMENT

FIELD TESTS TO ASSESS ADEQUACY OF PROTECTIONS AFFORDED CABLE TELEVISION OPERATIONS FROM WHITE SPACES DEVICES

Dave Large

March 18, 2009

EXECUTIVE SUMMARY

Following the release of the Second Report and Order setting forth the rules for operations of "white spaces" devices in unused television channels, NCTA commissioned Carl T. Jones Corporation and David Large to conduct field tests to assess the adequacy of the rules with respect to protecting reception of cable signals by it customers and protecting the reception of over-air DTV stations at cable headends.

The tests of direct pickup (DPU) by cable customers' television receivers demonstrate that the distances from portable white spaces devices into adjoining apartments within which interference can occur is of the order of 80 feet and can occur due to receiver shielding limitations, interconnecting wiring, or a combination of the two. A reduction in the maximum transmit power allowed for portable white spaces devices is the only reasonable solution to avoiding high levels of interference to existing receiver installations (the alternative being extensive replacement of existing wiring in served buildings plus the mandatory provision of converters in front of every customer's receiver). The tests further show that far from "includ[ing] many safeguards to prevent harmful interference to incumbent communications services," the current rules will virtually ensure interference, not only within homes, but extending to neighbor's homes. Furthermore, the Commission's stated intent to "closely oversee the development and introduction of these devices to the market and will take whatever actions may be necessary to avoid, and if necessary correct, any interference that may occur" does not recognize that there will be no way to cure widespread DPU interference from deployed devices short of simply shutting them down.

More seriously, the tests found that the distance within which fixed white spaces transmitters can cause interference to cable customers' receivers can be as far as 1,000 feet, including an allowance for penetrating an external building wall, due to the combination of 16 dB higher EIRP and permitted operation on VHF television channels where television set shielding proved to be less effective. Interference from fixed white spaces devices can most easily be avoided by mandating a minimum spacing between fixed white spaces devices and buildings served by cable systems. Alternately, fixed devices might be permitted to operate closer to served buildings, but with the power reduced accordingly (for every 4:1 power reduction, the minimum required spacing could be cut in half).

Tests of interference to the reception of DTV signals at cable headends show that the protections provided in the rules will be inadequate for rural headends in marginal signal areas using tall towers. Also, headends located within TV stations' protected contours will need adjacent channel protection from nearby portable devices and, depending on location, may need greater protection from white spaces devices transmitting from

outside the contour than is provided in the current rules. Third, the width of the "wedge" of the defined protection area is not adequate for most receiving antenna patterns. Finally any headends that happen to be located more than 80 km beyond the protected contour boundary of a received station logically require protection just as would a headend that was located closer. It is hard to conceive of a rationale for denying protection to the headends serving deep-fringe communities.

Four changes to the current rules will provide an appropriate level of protection for headends:

A) Allowing any headend to register in the database, regardless of location.

B) Widening the "wedge" in the keyhole-shaped protection area defined in the rules from ± 30 degrees to ± 50 degrees.

C) Providing a simple process whereby operators of headends for which the defined protection areas are not sufficient due to low received signal levels, tall towers, or other factors, can define an adequate protection area.

D) Requiring fixed white spaces devices to coordinate with potentially affected headends when operations commence. This will avoid the potential for lengthy periods of reception loss for entire communities while attempts are made to solve interference issues after they occur.

The justifications for all these proposed changes are discussed in detail below, along with the detailed test results.

INTRODUCTION

On November 14, 2008 the FCC released its Second Report and Order (R&O) setting forth rules for the operations of "white spaces" devices in television channels which will be vacated with the cessation of analog over-air television programming.[1] With respect to existing communications services using those channels, the report states:

> *The actions we take here are a conservative first step that includes many safeguards to prevent harmful interference to incumbent communications services. Moreover, the Commission will closely oversee the development and introduction of these devices to the market and will take whatever actions may be necessary to avoid, and if necessary correct, any interference that may occur. Further, we will consider in the future any changes to the rules that may be appropriate to provide greater flexibility for development of this technology and better protect against harmful interference to incumbent communications services.*[2]

[1] Second Report and Order and Memorandum Opinion and Order, 08-260A1, ET Docket No. 04-186, Federal Communications Commission.
[2] R&O, paragraph 1.

The specific protections are spelled out in the rules as adopted and explained in the language preceding those rules.

As part of the rulemaking process, numerous parties submitted comments related to the potential for interference to various services, some of which will be discussed below. In particular, the National Cable and Telecommunications Association submitted comments predicting levels of two specific types of interference: direct pickup (DPU) of white spaces signals by cable customers' television receivers, and pickup of white spaces signals by antennas at headends used to receive television broadcast transmissions.[3] The technical aspects of these comments were based on reports prepared by me which, in turn, were based on a combination of laboratory tests of television set shielding effectiveness and calculations of maximum tolerable field strengths in both the DPU and headend reception environments.

Subsequent to the adoption of the R&O, NCTA commissioned two additional field studies to assess the adequacy of the protections provided cable television operations under the newly-adopted rules:

- A study by Carl T. Jones Corporation (CTJ) of the sensitivity of both analog and digital television receivers to external fields from white-spaces-like devices which are operated in accordance with the adopted rules.
- A study jointly conducted by CTJ and me of the sensitivity of headend over-air television reception to similar transmissions.

This report is a summary of the results of those tests and, based on them, recommendations for appropriate regulatory changes. Each of the test reports is attached as an appendix to this document.

DIRECT PICKUP INTERFERENCE

Explanatory Language in the R&O Regarding Protection Against DPU Interference

The primary explanatory R&O language related to DPU interference is contained in paragraph 126:

> *We will permit personal/portable devices operating in either mode to transmit with up to 100 mW EIRP. We recognize the concerns of the cable interests that there is a potential for direct-pickup interference and their position that power levels should therefore be limited to a lesser value. We appreciate that the tests described on our report on direct pick-up interference to three digital cable ready*

[3] Comments of the National Cable & Telecommunications Association, 11/30/04; Comments of the National Cable & Telecommunications Association, 1/31/07; Reply Comments of the National Cable & Telecommunications Association, 3/2/07; Comments of the National Cable & Telecommunications Association, 8/15/07; *ex parte* comments of the National Cable & Telecommunications Association, 8/1/08; and *ex parte* comments of the National Cable & Telecommunications Association, 10/27/08.

receivers and the anecdotal tests performed by our engineers in the laboratory and field in our second series of tests of white space developmental devices indicated that there is some potential for direct pickup (DPU) interference to cable service from TV white space transmitters. We also note, however, that this occurred at relatively close spacings within the user's premises and could be corrected by removing consumer-installed splitters and wiring that effectively reduce the shielding to interfering signals as well as reduce the desired signal levels available at the TV receiver. Further, when just the cable converter box was used to connect directly to the TV receiver, interference declined dramatically and was virtually non-existent on the digital tier of channels. Cable systems are rapidly moving to digital technology which should further alleviate the potential for interference. Consumers generally should be able to correct any interference to their own devices by increasing the separation, re-orienting the devices, or using wiring with improved shielding. We also note that, in our tests, with a 10 meter separation between devices on separate sides of a wall, such as in a townhouse, the interference did not occur at signals below 100 mW for two receivers and a bit under 50 mW for a third. The interference was also a function of the physical relationship between the devices, such as whether the interfering signal was located towards the front or rear of the TV receiver. In addition, as discussed below, we are requiring that TVBDs use dynamic power reduction, and in locations in townhouses and apartments where the operating distances are apt to be relatively short, the power level would typically be adjusted automatically to less than the maximum permitted power of 100 mW. In contrast, reducing the permitted power of the device could make it unviable in locations where the separations are greater. Accordingly, we are not persuaded at this time that the risk of DPU interference is sufficiently great to warrant a reduction in power that could impede the viability of certain TVBD applications. Nevertheless, we will closely monitor for any reports of this type of interference and will expect the equipment suppliers to cooperate in helping consumers to rectify any such interference.

Relevant DPU-related Provisions in the White Spaces Rules

§15.707 Permissible channels of operation
(a) All TVBDs are permitted to operate in the frequency bands 512-608 MHz and 614-698 MHz . . .
(b) Operation in the bands 54-60 MHz, 76-88 MHz, 174-216 MHz, 470-512 MHz is permitted only for fixed TVBDs that communicate only with other fixed TVBDs.

§15.709 General technical requirements

(a) Power limits for TVBDs are as follows:
(1) For fixed TVBDs, the maximum conducted output power over the TV channel of operation shall not exceed one watt. . . If transmitting antennas of directional gain greater than 6 dBi are used, the maximum conducted output power shall be reduced by the amount in dB that the directional gain of the antenna exceeds 6 dB.

(2) For personal/portable TVBDs, the maximum conducted output power over the TV channel of operation shall not exceed 100 milliwatts; except that for personal/portable TVBDs that do not meet the adjacent channel separation requirements in Section 15.712(a), the maximum conducted output power shall not exceed 40 milliwatts. If transmitting antennas of directional gain greater than 0 dBi are used, the maximum conducted output power shall be reduced by the amount in dB that the directional gain of the antenna exceeds 0 dBi.
(3) TVBDs shall incorporate transmit power control to limit their operating power to the minimum necessary for successful communication. Applicants for certification shall include a description of a device's transmit power control feature mechanism.

(b) Antenna requirements.
(1) For personal/portable TVBDs, the antenna shall be permanently attached.
(2) . . . The transmit antenna used with fixed devices may not be more than 30 meters above the ground.

In summary, the only regulations protecting cable subscribers from potential DPU interference are that:

- Portable devices are limited to 100 mW EIRP and operation on channels 21-51. When operating within a TV station's protected contour, operation on adjacent channels is limited to 40 mW; co-channel operation is forbidden.
- Fixed devices can transmit at up to 4W EIRP, may operate on channels 2 and 5-13 in the VHF band, plus 14-51 in the UHF band, and may use any transmitting antenna height up to 30 meters. Operation on adjacent channels or co-channel within a station's protected contour is forbidden.
- Both classes of devices are obligated to incorporate some form transmit power control (whose characteristics are not specified).

Regulations governing determination of available channels, including spectrum sensing and database access, are not relevant to DPU since cable operators typically use all channels in the available spectrum for communications to consumer devices. Similarly, the requirement that fixed devices periodically transmit identifying information in an as-yet-defined format is of no use to anyone not having the proper decoding information (which will, presumably, include cable subscribers and may well include cable company technicians) since it has no bearing on the probability of interference occurring, but only on the mechanism for curing interference once detected. Finally, although use of vertical polarity for white space transmissions has been discussed at various points in this proceeding, the final rules contain no such requirements (and they would be unlikely to be observed in the case of portable devices in any case). As the test results demonstrate, most television receivers are actually more sensitive to vertical than horizontal interfering fields.

The requirement for transmit power control does not require that the power be reduced to the level that results in a lack of interference, but rather to the minimum power that ensures reliable communications. No parameters are given for how the power decisions are reached, but only the requirement that: "Applicants for certification shall include a

description of a device's transmit power control feature mechanism." Given that portable devices, in particular, may well be communicating with externally-located fixed base stations, and that the difference in received signal between an external antenna 10 meters above the ground and a portable white spaces device within a building might be as high as 39.5 dB (as discussed in paragraph 76 of the R&O), it seems likely that portable devices might frequently be operating at or near their maximum permitted transmit power when communicating with a fixed device with such an external antenna location.

As for the other measures suggested in the explanatory language, they are either inapplicable to residents of adjacent apartments or wishful thinking. A person experiencing interference is very unlikely to suspect the cause, let alone where it may be coming from. The person causing the interference to a neighbor is unlikely to be aware of it and, furthermore, will have little motive to correct it. Even in the unlikely event that the source of the interference is identified and the neighbors are willing to cooperate in solving it, the device's producer is unlikely to "cooperate in helping consumers to rectify any such interference." After all, the transmitter will likely be manufactured by an off-shore company, sold to an equipment supplier, hence through a retailer to the customer. No one in that chain is going to do a house call to attempt to fix the problem. Even if they did, the options suggested are not realistic – the back of a TV set may be more sensitive than the front, but turning the picture towards the wall is not a viable solution. Alternately it is unrealistic to expect the innocent resident experiencing interference to rearrange his furniture so as to move the TV to a different location, or to remove a signal splitter and thus forgo a second outlet or use of a digital video recorder. If the problem is signal pickup in wires buried in the wall between the apartments, should the building owner be obligated to tear out and replace his entire in-building television cabling? Does the owner of the white spaces device have to agree to never use his laptop in the living room? None of these remedies is realistic in practice. Furthermore, after thousands or millions of these devices are sold and in service, there is no retroactive means of fixing widespread interference should it occur.

DPU Testing Summary

Given the regulations as released, CTJ chose to measure the EIRP required to cause just-detectable interference to television reception at a fixed distance, yielding results that could easily be scaled to determine the interference distance from white spaces devices transmitting at various power levels and distances. Given the uncertainty of orientation of the television receiver with respect to the white spaces device and the uncertainty of the polarity of the white spaces transmission, measurements were made at four orientations and two polarities. Tests were conducted on a variety of extended tuning range receivers including some capable of both digital and analog reception and some capable of only analog reception. Unlike the OET's informal tests, these tests were conducted under carefully controlled conditions and were intended to update CTJ's

earlier testing of receiver shielding effectiveness[4] and also to provide unbiased data to aid in assessing the probability of DPU interference under the new rules.

CTJ's reports of the first and second rounds of tests and a third report discussing the reasons for the differences in results between the tests are attached to this report as appendices.

The tests found that the distance from both portable and fixed white spaces transmitters which are operated in accordance with the newly-adopted rules within which DPU interference can occur is greater than predicted in my earlier reports[5]. This is due to two effects:

- First, despite the fifteen years that have elapsed since CableLabs first commissioned CTJ to conduct tests of receiver shielding performance, it is apparent that many receivers still do not meet the requirements of C.F.R.§15.118, at least as regards analog reception. Since my earlier adjacent apartment interference predictions generally assumed that modern receivers would meet that requirement, the predicted interference radii were conservative.

- Second, and more seriously, these tests showed that the presence of coaxial drop cables and connectors within the interfering signal's field materially affected the sensitivity of customers' installations to interference. This occurred despite the use of higher quality cable than typically installed by professional cable installers and much higher quality cable and connectors than typically installed by customers themselves. In order to measure the shielding effectiveness of receivers in isolation in the second round of tests, a considerable effort was required to avoid effects from the presence of wiring, including the use of devices not generally available to cable technicians. While there is some question regarding whether the interference was due to the sensitivity of receivers to common-mode pickup or whether it was a function of shielding effectiveness of the cable itself, the mechanism is less important for the purposes of this study than the overall sensitivity of typical cable customer receiving installations. These test results are consistent with comments filed by Motorola in this proceeding[6] and also consistent with OET's observations in their very limited and informal DPU tests[7].

In both sets of tests, a test environment was created in which the receiver under test was fed a signal from the local cable system and was immersed in a uniformly distributed

---

[4] *Consumer Premises Equipment Performance and Compatibility Testing*, CableLabs, 1993, submitted to the Commission as an attachment to the January 1994 Comments of Joint Filers in ET Docket 93-7, FCC No. 93-495.
[5] Attached to the various NCTA filings listed above.
[6] *Motorola Whitepaper: Shielding Effectiveness of In-Home Cable TV Wiring and Splitters*, submitted in an *ex parte* presentation to the FCC on December 6, 2007 with regard to ET Dockets 04-186 and 02-380 by Motorola Corporation.
[7] "Evaluation of the Performance of Prototype TV-Band White Space Devices, Phase II," October 15, 2008, Office of Engineering and Technology, FCC.

field transmitted from a white-spaces-like device. The cable signal was adjusted to the lowest value allowed under the applicable FCC rules, then the external field was adjusted upwards until the threshold of visibility of interference (TOV) was observed. As detailed in the CTJ reports, measurements were made on several receivers, at both horizontal and vertical polarization of the external field, on multiple channels, and at four horizontal azimuths of each receiver with respect to the external field.

Several factors limit our ability to draw conclusive opinions about the potential for DPU interference from these tests, including the limited number of receivers, the unknown condition of the cable signals used, the limited number of receiver azimuth positions, and the limited number of channels on which DPU was tested. Nevertheless, these tests are the most comprehensive current tests of probable DPU interference under the new rules of which we are aware, and allow us to make updated predictions of probable DPU interference under various conditions. With the exception of the limited number of tested receivers, all the other factors will tend to make these predictions understate the probability of DPU interference.

Testing of Receivers with Associated Wiring

The first round of tests included interconnecting coaxial cables and connectors of quality that is typical of professionally done cable television installations. In particular, the testing "utilized a brand new, high quality triple-shielded[8] RG-6 cable with factory installed threaded F connectors" whose installation was carefully inspected and found to be proper. As Figure 7 of the December, 2008 test report shows, the cable entered the test area from the back (through an RF-absorbing wall), then vertically up to the antenna connector of the receiver under test. No passive components (such as signal splitters) were exposed to the external field. In short, if this were a residential cable installation, it is hard to see how it could be further optimized with respect to minimizing pickup from the transmitted field from a white spaces device.

The results of the tests were as follows:

<u>Analog</u>: Among the tested receiver installations (each compromising a receiver with attached cable), CTJ measured the field surrounding the receiver at the threshold of visibility (TOV) to be as low as 84 dBu at VHF channel 12 and 92 dBu on cable channel 101 (overlapping off-air UHF channel 45). By comparison, my earlier estimates of the distance into adjoining apartments within which probable DPU interference to analog

[8] Coaxial "drop" cable consists of a metallic center conductor, a foamed dielectric, and then multiple layers of shielding. The first shielding layer consists of a metallic foil and the second of a metallic braid surrounding the foil and in contact with it. A plastic layer on the outside provides mechanical and environmental protection for the metallic elements. This is known as "double-shielded" cable and is typical of what is used commonly by the cable industry except where strong external fields are expected. Lower quality double-shielded cables (with lower braid wire density, and thus less effective shielding) is sold by many electronic retailers and frequently used by cable customers to do their own wiring. When higher fields are expected, cable operators resort to "triple-shielded" cables, which have an additional layer of foil between the braid and jacket, and "quad-shielded" cables, which have an additional layer of foil and an additional layer of braid.

receivers might occur were based on the field strength required to reach TOV being 101 dBu. The worst of these receiver installations therefore fails that assumption by 17 dB at channel 12 and 9 dB at off-air channel 45 respectively, with six of the seven receiver installations falling below 101 dBu on channel 12 and four of the seven below that level on cable channel 101.

Digital: Among the tested receiver installations, CTJ measured the threshold of visibility (TOV) to be as low as 86 dBu at VHF channel 13 and 85 dBu on cable channel 36 (297 MHz).[9] By comparison, my estimates of the distance into adjoining apartments within which probable DPU interference to analog receivers might occur were based on the field strength required to reach TOV being 94 dBu. The worst of these receiver installations fail that assumption by 8 dB on channel 13 and by 9 dB at cable channel 36 respectively, with four of the five digital receiver installations falling below 94 dBu on channel 12 and three of the five below that level at 297 MHz.

What these results demonstrate is that the net shielding of professionally done cable television installations using high quality components connected to typical television receivers is significantly worse than that required of television receivers in order to meet the requirements of §15.118. Thus, this data indicates that our earlier prediction that the interference radius from a 100 mW EIRP portable white spaces device to a typical television installation in an adjacent apartment (assuming 5 dB attenuation in the intervening wall) is about 65 feet understates the typical field situation. This is not "relatively close spacings within the user's premises" as described in R&O paragraph 126, but rather significant penetration into the homes of other people who would typically have no knowledge of the source of interference, nor the knowledge of how to mitigate it. Furthermore, the interference could not be "corrected by removing consumer-installed splitters and wiring that effectively reduce the shielding to interfering signals as well as reduce the desired signal levels available at the TV receiver" since the installation in these tests already eliminated all components with the exception of the connecting cable itself. While use of an external converter might alleviate or reduce the interference, many cable customers have resisted the use of such devices and FCC policy has encouraged the incorporation of the functions of cable set-top boxes within cable-ready receivers (§76.630 and related regulations, in fact, define the technical standards which enable such elimination of cable boxes).

These tests also demonstrate that, at VHF channels, the net shielding effectiveness is far lower than would be required to meet the §15.118 requirements, with TOV field strengths averaging just 89.7 dBu for analog reception and 88.9 dBu for digital reception. With this degree of susceptibility, a fixed white spaces device would generate sufficient field strength to potentially cause interference at 736' after having penetrated one 5-dB wall. Furthermore, these numbers may be conservative because the majority of cable television drop cables are installed aerially and often routed on the exterior of buildings, thus removing whatever effects exterior wall attenuation may have. While some building constructions may result in greater exterior wall attenuation, single-framed wood exterior

[9] Unfortunately a cable channel that overlaps the whitespaces UHF channel range was not available for these tests.

walls are common, at least in Western states, and there has been no evidence placed in the record to suggest that their attenuation is commonly greater than 5 dB, while there is evidence (discussed in my earlier report) to suggest that low attenuations are not uncommon. It was for this reason that NCTA suggested minimum separations between fixed station antennas and building served by cable television providers. It should also be pointed out that the rules, as adopted, specify a maximum height for fixed station transmitting antennas, but neither a minimum height nor a prohibition against interior installations. Thus, to the extent that they replace existing WiFi hubs, they might well be mounted in interior hallways of apartment houses and use maximum power to reach as many apartments per transmitter as possible.

Comparisons to Motorola's tests: Motorola tested a variety of cables, both professional and consumer grade, and found up to 50 dB difference in shielding effectiveness. Similarly, they found significant differences among passive in-home devices. This reinforces the observation above that the components used in CTJ's first round of DPU tests were of far better quality than often used by consumers. Motorola did not test for any interaction between cables and receivers. Based just on the shielding effectiveness of typically components found in homes and apartments, they reached the following conclusions:

> *Many homes have been constructed with in-wall cable distribution systems and these would be the most difficult and expensive to remediate. This is because such efforts will require fishing new wires and opening walls in some cases to access buried splitters and connectors. This may be more of an issue in shared dwellings such as apartments, condos, and town-homes as compared to single family houses since there may be cabling devices in the shared walls and the DPU interference may be caused by a neighbor's TVWS device.*
>
> *In a prior Motorola whitepaper, Recommendations on Cognitive Radio (CR) Operations in TV White Spaces (TVWS), Motorola recommended a consumer (Class B) TVWS device power limit of 10 mW (10 dBm EIRP). This power level was arrived as a recommended balance between enabling this new class of useful consumer devices while minimizing the potential for interference to the existing widely deployed cable TV service. This recommendation was derived from this test data that shows TVWS devices operating at power levels much greater than 10 mW in the consumer environment significantly increases the potential to cause DPU interference into the home cable TV wiring in many cases. While a potential exists for DPU interference in some situations even with consumer TVWS devices operating at 10 mW, as shown here, Motorola believes that these should typically be solvable at little to no cost and effort by actions that consumers can take.*[10]

Comparisons with OET's informal tests: The OET tested wiring-related DPU on one analog and one digital channel on one television receiver at one location. In the case of analog, they found that interference was worse with wiring that included a preamp, splitter, and interconnecting jumpers than without those components. That the wiring

[10] Motorola *op.cit.*, p.15-16.

was part of the ingress mechanism is verified by the fact that the interference was also observed on a TV in an adjoining room. In the case of digital, they only tested with a converter ahead of the TV, yet found that the ingress was worse with the standard wiring than when a "laboratory grade" jumper was used to directly connect the cable outlet to the converter box input.[11] While no quantitative conclusions can be drawn from this single, informal test, it reinforces CTJ's and Motorola's conclusions that in-home wiring (and the interaction between that wiring and receiver tuners) can, under some conditions, be the dominant mode of DPU. As Motorola comments, correcting wiring-related DPU may be very difficult, especially when wiring in apartment houses is buried in walls.

Testing of Receivers Isolated From Wiring

After analyzing the first round of tests, CTJ determined that the presence of the cable connecting each test receiver to the cable outlet might be preventing them from assessing the inherent shielding effectiveness of the receivers. The second round of tests was conducted, therefore, to test the receivers in such a way that they were isolated, to the degree possible, from any effects of the cable.

The measures required to achieve this isolation, however, are interesting in themselves. First, some improvement was achieved by replacing the triple-shielded cable with quad-shielded cable of comparable quality. That, however, was not sufficient. It was also necessary to "route the cable on the floor and under a ground plane and through some snap on type torroids to force the ingress interference to the site RF noise floor (measures that are probably unlikely in a typical cable viewer's home theater)." This measure strongly suggests that the interference mechanism was not only limited by the shielding effectiveness of the cable, but also by sensitivity of television tuners to common-mode currents induced into the shields of interconnecting cables. In other words, this may be a television interference mode that is neither commonly tested, nor spelled out in Part 15 regulations. The measures required to eliminate this effect included "heroic" steps to shield the cable from exposure to the interfering field, together with the use of toroidal magnetic coils to increase the cable's impedance to induced longitudinal currents.

For purposes of determining the probability of DPU interference, however, the exact mechanism through which the interference occurs is less important than the net susceptibility of a professional-quality installation and the fact that a significant difference in sensitivity occurred with every receiver tested.

The results of the tests of receiver shielding effectiveness, with the receivers isolated from any cable-induced currents, is as follows:

<u>Analog</u>: If we plot the maximum sensitivity for each receiver (across polarity and orientation) as a function of frequency, we can see from Figure 1 below that five of the seven receivers had visible interference at field levels lower than 100 mV/m (=100 dBu)

[11] "Evaluation of the Performance of Prototype TV- Band White Space Devices Phase II," October 15, 2008, Technical Research Branch Laboratory, Division Office of Engineering and Technology, Federal Communications Commission, OET Report FCC/OET 08-TR-1005, p33-35.

at 207 MHz (channel 12), two of the seven similarly failed to avoid interference at 513 MHz (UHF channel 21 and three of the seven failed at 657 MHz (UHF channel 45). Furthermore, at each channel, the "failed" receivers included newer "digital cable-compatible" models.

Further, looking at the difference in shielding effectiveness between 207 MHz and 513 MHz, we can see that all five of the receivers that experienced interference at external fields weaker than 100 mV/m exhibited decreasing effectiveness with decreasing frequency. This is consistent with CTJ's 1992 results, which found that the median shielding effectiveness was 13 dB worst at channel 6 than at channel 12.

In our previous technical filings, we predicted an "adjacent apartment interference radius" (including 5 dB of assumed attenuation for the intervening wall) for analog cable signals of about 30 feet, assuming a receiver whose shielding was compliant with §15.118 of the rules and a portable TVBD with an EIRP of 100 mW (the second line from the top in Figure 2). As the figure shows, however, the interference radius based on CTJ's measurements extends out to 85 feet for the most sensitive receivers at both channels 21 and 45. Only at channel 21 was the <u>average</u> receiver more immune to DPU than predicted in our previous filings and, even at that channel, two of the seven receivers were worse. This suggests that practical field experience with DPU interference to analog reception may well be worse that predicted and, in fact, worse than interference to digital reception.

The interference radius from fixed devices (36 dB EIRP), which are allowed to operate on VHF channels, will be much greater -- a function of reduced shielding effectiveness combined with higher transmitted power. As shown in Figure 3, scaling CTJ's results shows that the interference radius to a receiver located inside a building (through one exterior wall) extends to nearly 1,000 feet at channel 12, while at either UHF channel 21 or 45 it is about 440 feet. Although these are based on measurement of the most sensitive receivers, note from Figure 1 that the two most sensitive receivers at channel 12 are different than the two most sensitive receivers at channel 45, and thus four of the seven receivers tested are close to the most sensitive tested on at least one of the three tested channels.

More seriously, no data was taken below channel 12. If CTJ's 1992 data is representative of typical shielding efficiency as a function of frequency, the interference radii at low VHF channels will be even greater. This shows clearly that the lack of required minimum spacing between fixed TVBDs and buildings where cable service is provided is a major problem.

Unlike the situation with over-air antennas, polarity diversity (even if used) is of no help to DPU issues – in fact, six of the seven receivers were more sensitive to vertically polarized signals than to horizontally polarized signals.

<u>Digital:</u> DPU tests to measure interference to QAM reception were conducted only at channels 5, 13 and cable channel 36 (297 MHz). No unscrambled channel was available

in the UHF broadcast band. The minimum signal strength (among various orientations and polarities) required to cause visible interference to each channel on each of the evaluated receivers is shown in Figure 4.

The good news is that all of the tested receivers appear to be able to withstand a 100 dBu external field from a white spaces device when tuned to digital signals. We are concerned, however, by the difference between TOV interference to an analog receiver vs a digital receiver – above that level an analog picture will slowly become noisier, but will be watchable as the interfering signal increases by an additional 5-10 dB, whereas the digital signal will cease completely with an increase in interfering field of about 1 dB.

Based on this test data, however, it appears that, if white spaces rules are modified in such as way as to adequately protect analog reception, they will also provide an adequate margin for digital reception, given the greater apparent shielding for that mode.

HEADEND RECEPTION INTERFERENCE

Explanatory Language and Regulations in the R&O Regarding Protection of Over-Air Broadcast Television Signal Reception From Interference

In addition to the power and antenna limitations listed above in the discussion of DPU interference, several provisions provide a measure of protection against interference to headend reception of broadcast signals.

The most important provision is the establishment of a database that must be accessed by a white spaces device (WSD) before any transmissions. This database will contain location-specific information on channels eligible for use. This database is constructed by combining information related to a variety of protected entities including the protected contour of each broadcast television station. Under some circumstances, cable operators are allowed to register their headends in this database and to gain, in return, a keyhole-shaped protection area for each channel received, and a smaller protection area for channels adjacent to those received.

In particular, the co-channel primary beam protection area consists of a wedge-shaped area whose center is the location of the receiving antenna, whose axis is a line extending from the receiving antenna to the television broadcasting tower from which the signal is received, whose angular width is 30 degrees either side of the axis, and whose depth extends to 80 km from the receiving antenna. Outside the primary beam protection area, protection is provided within 8 km of the receiving antenna at all other azimuths (see Figure 5). Adjacent channel protection is similar, with the exception that primary beam protection is provided only out to 20 km within the ± 30 degree "wedge" and 2 km at all other azimuths.[12] Headends that are located within the protected contour of the station

[12] Section 15.712(b): "*Translator receive sites and cable headends*: For translator receive sites and cable headends registered in the TV bands database, TVBDs may not operate within an arc of +/-30 degrees from a line between the registered translator or cable headend receive site and the TV station being received within a distance of 80 km from the receive site for co-channel operation and 20 km for adjacent channel

being received may not be registered with the database, meaning that they will have to live with adjacent channel interference from portable devices which are allowed to operate on such channels at up to 40 mW EIRP. In addition, the co-channel protection radius to the sides and rear of the receiving antenna provided for registered headends will often be greater than the "buffer zone" provided outside the protected contour boundaries, meaning that headends within, but close to the boundary of, the protected contour may suffer interference from devices outside the protected zone.

Unfortunately, there are discrepancies between the language in the rules and the explanatory language in the preceding text. Specifically, the explanatory language describes the 80 km and 20 km protection distances as extending out from the station's protected contour[13] (which is illogical, since it is the receiver that is being protected). Secondly, it does not define the center of the protected wedge-shaped area.[14] Finally, it specifically denies protection of any kind to headends located more than 80 km outside the protected contour[15], whereas the language in the rules does not contain this provision.[16] Clearly, all protection radii should be referenced to the receiving antenna location. Furthermore, there is no logical reason to deny protection to the operator of a cable system whose headend happens to lie more than 80 km outside the protected contour of a received DTV station. Thus, the language in the rules should control wherever there is a conflict.

As a backup to the database-defined protection areas, all WSDs are required to include signal sensing which is intended to prevent them from inadvertently transmitting on a channel in use should there be an error in the database. Unfortunately, this does not provide a true redundant protection mechanism since any time the occupancy of channel listed as available by the database operator is sensed, the only action (except when the detected signal is from a wireless microphone) is to inform the user of the device and give him the option to elect to remove that channel from the eligible list. The default is for the device to keep the channel on its eligible list.[17] Thus, the user (who will not be suffering any interference with his own viewing unless he happens to be watching that

---

operation. Outside of this +/-30 degree arc, TVBDs may not operate within 8 km from the receive site for co-channel operation and 2 km from the receive site for adjacent channel operation."

[13] Report and Order, paragraph 186: "The protected zone will extend to the edge of the TV station protected contour, and will be limited in distance to <u>80 kilometers from the protected contour</u> for co-channel operation and to <u>20 kilometers from the protected contour</u> for adjacent channel operation." [emphasis added].

[14] Report and Order, paragraph 186: "Specifically, to prevent interference within the main reception beam of the TV translator station or cable headend receive antenna, operation of TV band devices will be prohibited co-channel and adjacent channel to the channel(s) being received by these facilities over an arc of +/- 30 degrees from a line between the receive site and the TV station(s) being received."

[15] Report and Order, paragraph 187: "Again this protection will be afforded only to TV translators and cable headends located within 80 kilometers of a TV station's service area." (referring, in this case, to protection against white spaces transmitters operating outside the main beam of the receiving antenna).

[16] Section 15.713(c) [entitled Restrictions on registration] (2) "Cable television headends within the protected contour of a television channel are not eligible to register that channel in the database."

[17] §15.711(c)(3) "TV channel availability check time. A TVBD is required to check for TV signals for a minimum time interval of 30 seconds. If a TV signal is detected on a channel indicated as available for use by the database system, the device will provide a notice of that detection to the operator of the device and a means for the operator to optionally remove the channel from the device's list of available channels."

particular channel at the time on a nearby television receiver) is required to take an action whose effect is to reduce the number of channel choices available for communications, if the sensing is to have any useful effect to reducing interference to others' reception. Given this scenario, it is likely that often the user will ignore the notice, leading to cases of interference where there are errors in the national database.

Headend Testing Summary

Given the regulations as released, CTJ and I chose to measure the transmitted EIRP required to cause co-channel interference with digital television reception at an actual headend using brief test transmissions from a number of nearby locations. Knowing the level of the desired station, we could then scale our results to other distances. Using this data we were able to judge the adequacy of the headend protection areas defined in the rules. Although we did not conduct adjacent channel tests, the results are easily scaled for adjacent channels, using the adjacent channel rejection specifications in relevant standards and specifications.

As noted in the attached report, the headend used for these tests was located in Fredericksburg, VA, which is slightly outside the protected contour of WCVW in Richmond, VA., whose digital signal on channel 44 was used for the tests. This station is not part of the lineup of the Fredericksburg system. The details of the tests are contained in the report "Field Tests Assessing the Adequacy of the New White Spaces Rules with Respect to Avoiding Co-Channel Interference with Cable System Headend Reception," included as an appendix to this report.

The test data from those locations where a line-of-sight path between the test van and the headend receiving antenna could be verified were very consistent when the gain of the receiving antenna as a function of azimuth (taken from the manufacturer's data sheet) was taken into account. When we calculated the implied level of the DTV station's signal from these measurements, using the assumption of free-space attenuation between the test van and headend, it agreed within a few dB with direct measurements of the desired signal at the antenna downlead.

Given this data, we were able to scale the results to a typical rural headend, where:

- The signal level at the receiving antenna just met the criteria used to define the DTV station's protected contour (41 dBu).
- The antenna performance was similar to that used in the Fredericksburg headend, but had a uniform front-to-back and sidelobe suppression of 25 dB.
- The receiving antenna mounting height was 500'
- The surrounding countryside was relatively flat, as is typical in Midwestern farming country.

These assumption certainly do not represent worst-case conditions, as operators sometimes use higher towers, for instance, and experience lower DTV signal levels. Nevertheless, this example will serve to evaluate required protection areas. Given the

need to provide an adequate margin between loss-of-reception interference and normal operating conditions and to take into account normal fading conditions experienced at fringe receiving locations, we scaled the results to provide 23 dB worst case D/U ratio.

Under those assumptions, the area over which transmissions from portable white spaces devices must be forbidden to adequately protect headend reception is shown in Figure 6. As the figure shows, while a "keyhole" area approach makes sense, the required co-channel protection distance within the main beam of the receiving antenna is limited by the distance over which line-of-sight transmission conditions exist between the white spaces transmitter and the headend antenna, while outside the main beam, a protected radius of 13 km is adequate. Also, the relevant beamwidth measure for protection must be determined by the angle at which the antenna's response drops to its specified sidelobe rejection value, not the more commonly specified 3 dB dropoff. For the antenna used in Fredericksburg, the beamwidth using this standard is 50 degrees either side of the antenna azimuth and this is probably typical of such antennas.

By comparison, a fixed white spaces transmitter, due to its 16 dB higher EIRP, must be forbidden to operate outside the main beam of the antenna to about 80 km, resulting in the protection area shown in Figure 7, where the distance in the main beam is limited by line-of-sight transmission and the distance outside the main beam is limited by line-of-sight distance or 80 km, whichever is less. This raises a question for headends located within the protected contour of broadcast stations, since the required protection distance to prevent interference from fixed stations located outside the contour boundary will often be larger than the buffer distance provided in the rules, which varies from 6 to 14.4 km, depending on white spaces antenna height.[18]

The proposed 50 mW white spaces devices which depend only on signal sensing can still cause interference to headend reception from a considerable distance. Figure 8 shows that such a device, when operating within the main beam of the receiving antenna, is still capable of destroying DTV reception at any distance within line-of-sight of the headend antenna, while the required protection outside that beam is reduced to 9 km. Clearly, given problems with "shadowing" of reception, especially in rural areas, such devices will pose a major threat unless some other means is used to protect headends.

Scaling the results for adjacent channels, we found that the adjacent channel protection areas required are generally consistent with those provided under the rules as adopted. Headend protection within the protected contours of broadcast stations must still be provided, however, since portable devices transmitting within the protected contour at 40 milliwatts must be at least about 490 meters from the headend if within the main beam of a receiving antenna or within about 80 meters if outside that beam.

In summary, the results show that the protection areas in the rules, as adopted, are inadequate to protect reception at some rural headends, though with a modification of the width of the main beam "wedge" area of the protection area, and allowing registration of

[18] §15.712(a)(2).

headends regardless of location (including within stations' protected contour boundaries) may be adequate for others.

A Recommended Regulatory Approach to Protect DTV Reception at All Cable Headends

Our test results suggest that four changes to the rules, as adopted, will solve headend interference problems without unnecessarily restricting operation of WSD:

First, allow registration in the database of all headend, regardless of location. Nothing in the evidence considered in this rulemaking suggests that this will be burdensome to the operation and maintenance of the as-yet-undefined database, and it recognizes that the cable-provided television reception of all subscribers is equally deserving of protection.

- In the case of headends located within the protected contours of television stations, this will provide the required protection from the adjacent channel operation of portable devices, as well as increased protection from operation of WSD operating just outside the "buffer zone" beyond the protected contour.

- In the case of headends located more than 80 km from the protected zone boundaries, it will provide required protection for operators who must use exceptional tall towers (or similar antenna locations) and deal with very low received signal levels.

Second, increase the width of the "wedge" in the keyhole-shaped protection zone to ±50 degrees from the receiving antenna azimuth and the co-channel protection radius outside the wedge to at least 13 km. This will better match the azimuth range of typical receiving antennas at which the response has not been attenuated to the specified side and rear rejection ratios and will increase the side/back protection to the levels required for protection against portable devices when desired DTV signals are at or above 41 dBu. Together, these two changes will reduce the number of cases where a protection area greater than the default specified in the rules is required.

Third, define a clear mechanism whereby cable operators can receive a greater protection area upon making a technical showing of the factors requiring greater protection distances than those provided in the rules. Such factors might include an antenna configuration leading to greater line-of-sight distances or reduced sidelobe attenuation, low received signal levels, exceptional fading conditions, or field tests which demonstrate susceptibility to WSD signals originating from beyond the boundaries defined in the rules.

Fourth, require operators of fixed white spaces devices to coordinate with the operators of all cable headends whose operations might potentially be affected by the operation of their devices. Identifying those headends can be quite simple, provided all headends are allowed to register. The database host could then provide the WSD operator the contact information for all headends within 100 km, of the fixed WSD. A simple channel-by-channel test, with the WSD signal measured at the headend, could determine if a problem

exists. Such a procedure could prevent unexpected reception loss to entire communities when new WSDs are installed, followed by the lengthy process of identifying the interfering device, filing a complaint, and resolving the interference after the fact.

Figure 1: field required to interfere with analog reception

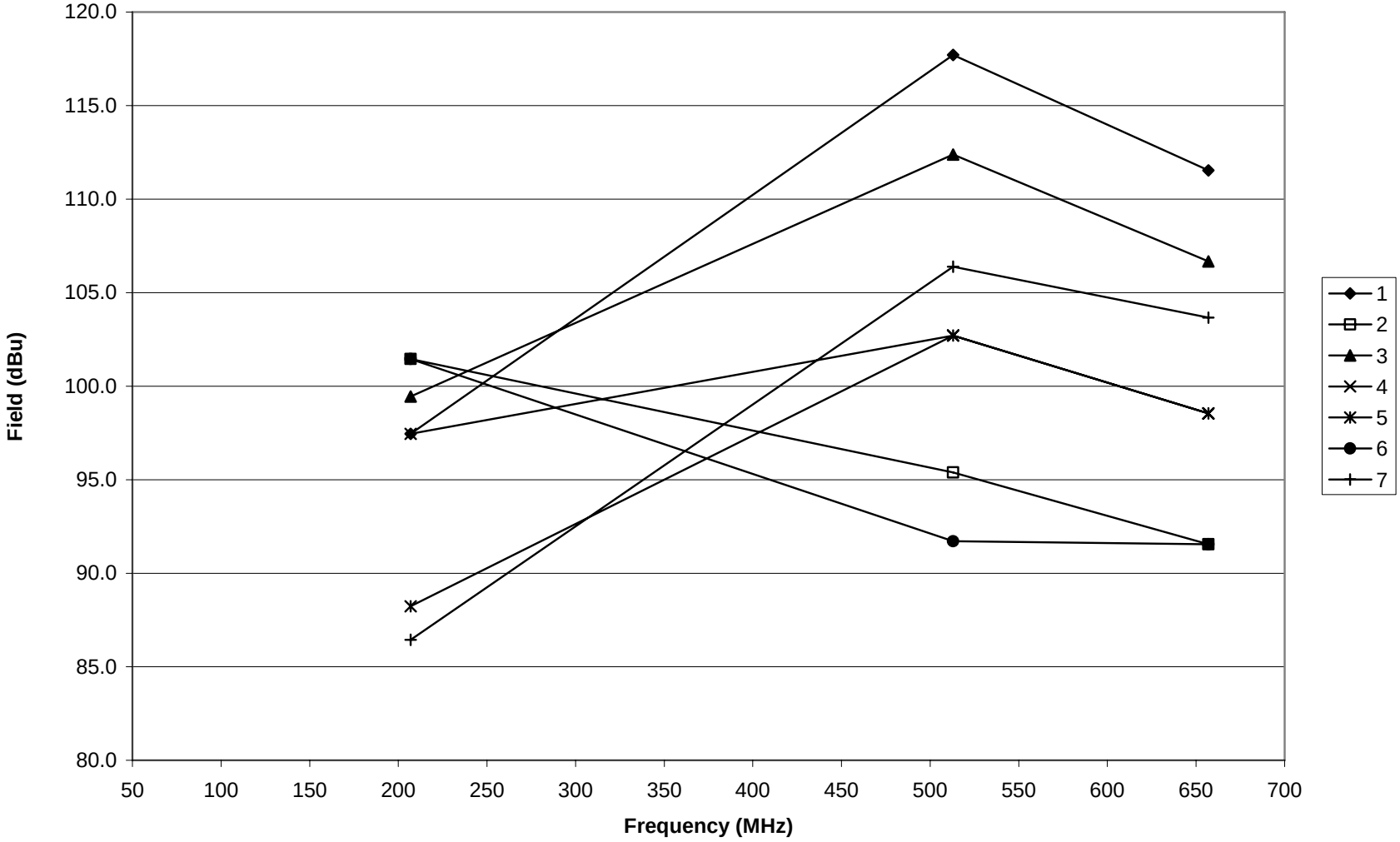

Figure 2: EIRP (dBm) vs Distance to Receiver for Maximum Tolerable DPU Analog Video Interference In Adjoining Apartment With One Intervening Wall

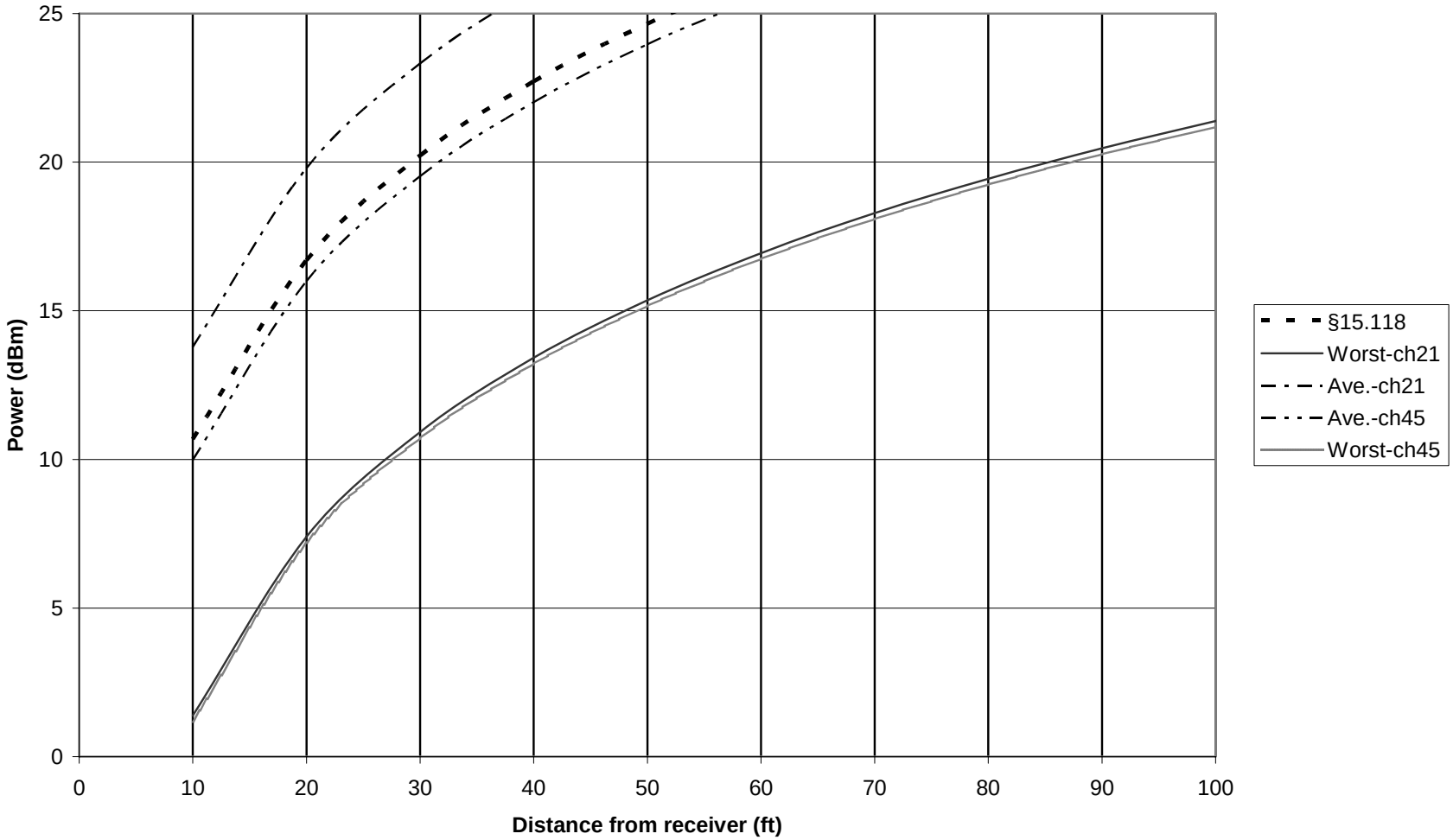

Figure 3: EIRP (dBm) vs Distance to Receiver for Maximum Tolerable DPU Analog Video Interference Inside Building With One Intervening Wall

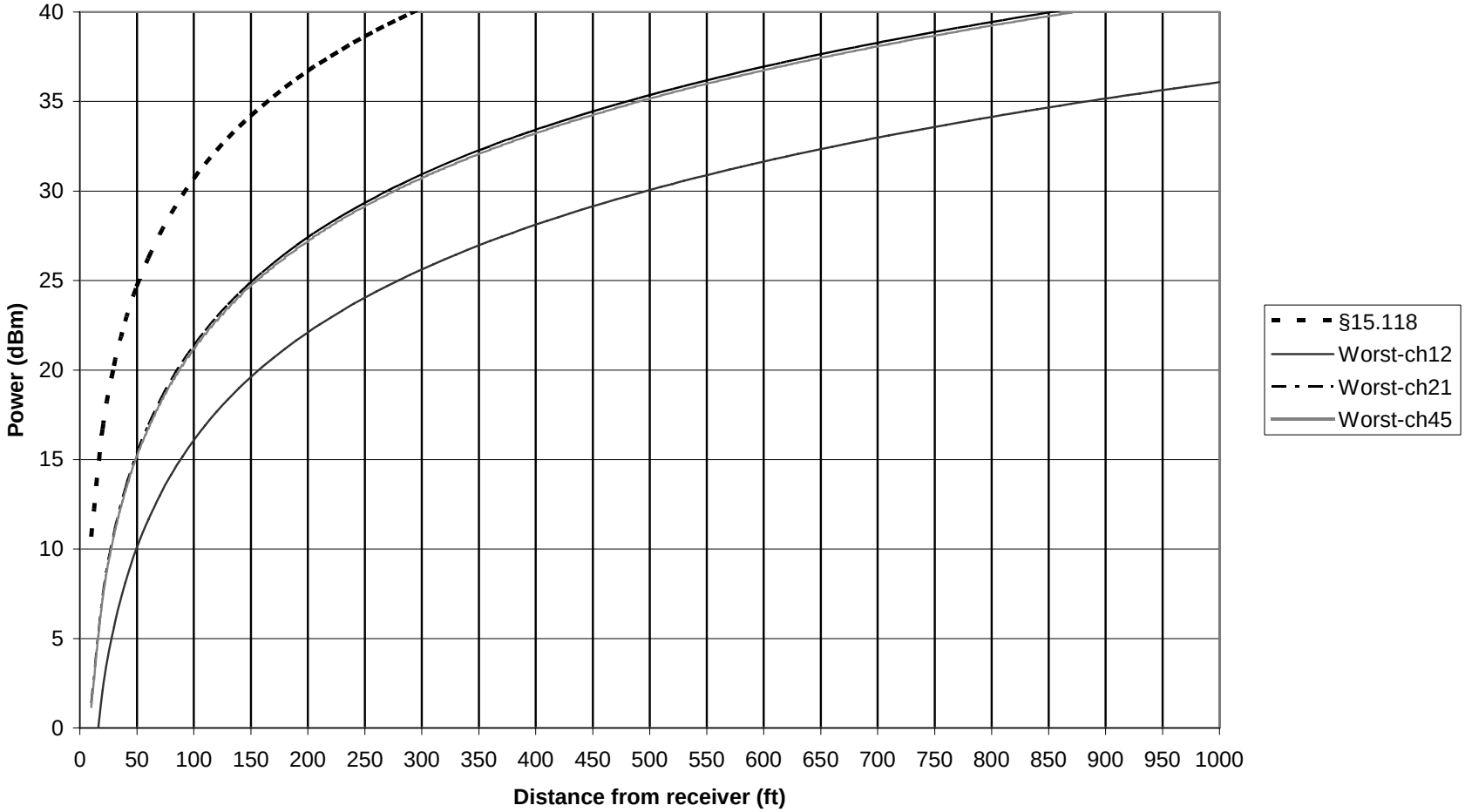

Figure 4: Field required to interfere with 256QAM reception

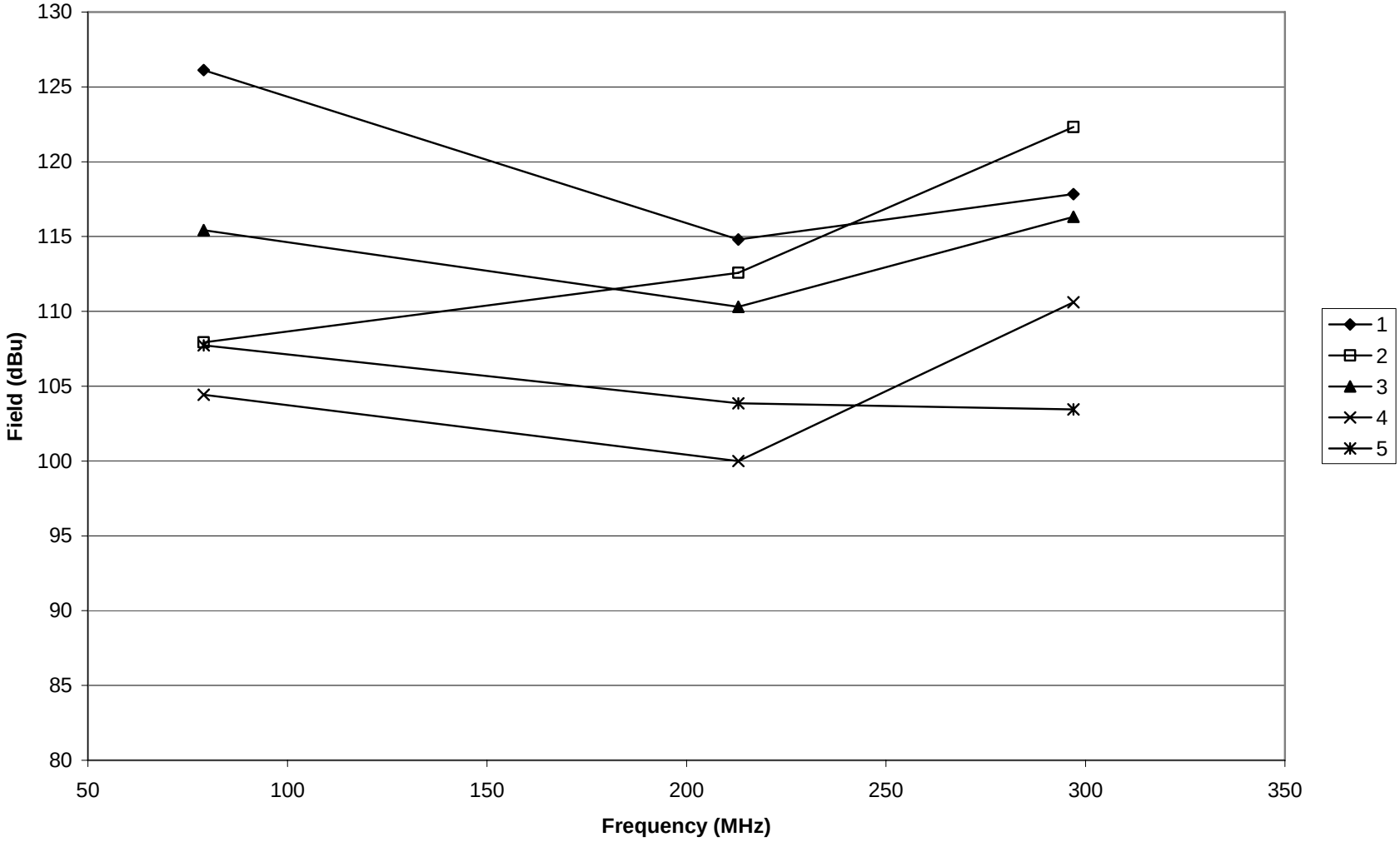

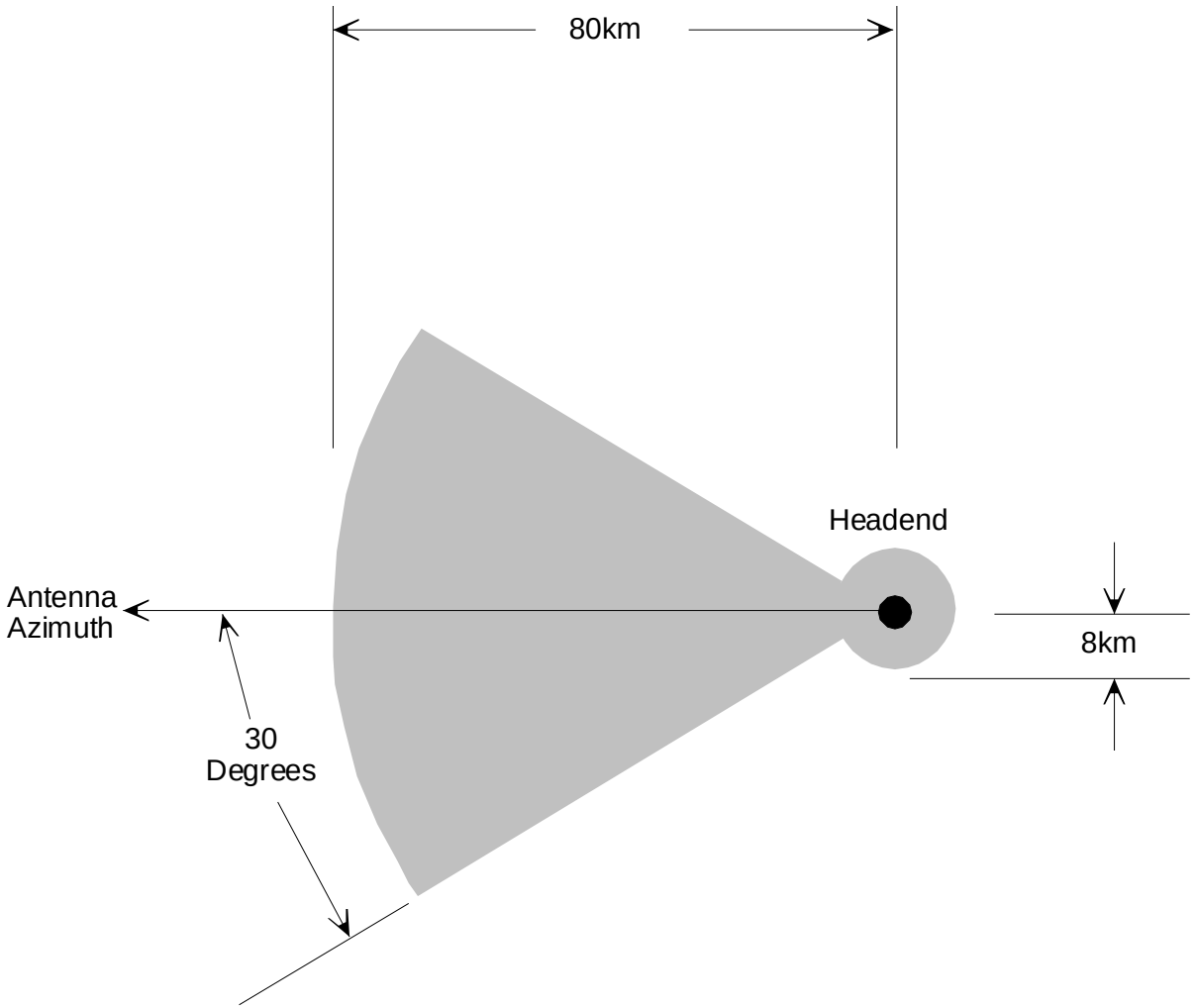

Figure 5: FCC-Specified Headend Co-channel Protection Areas

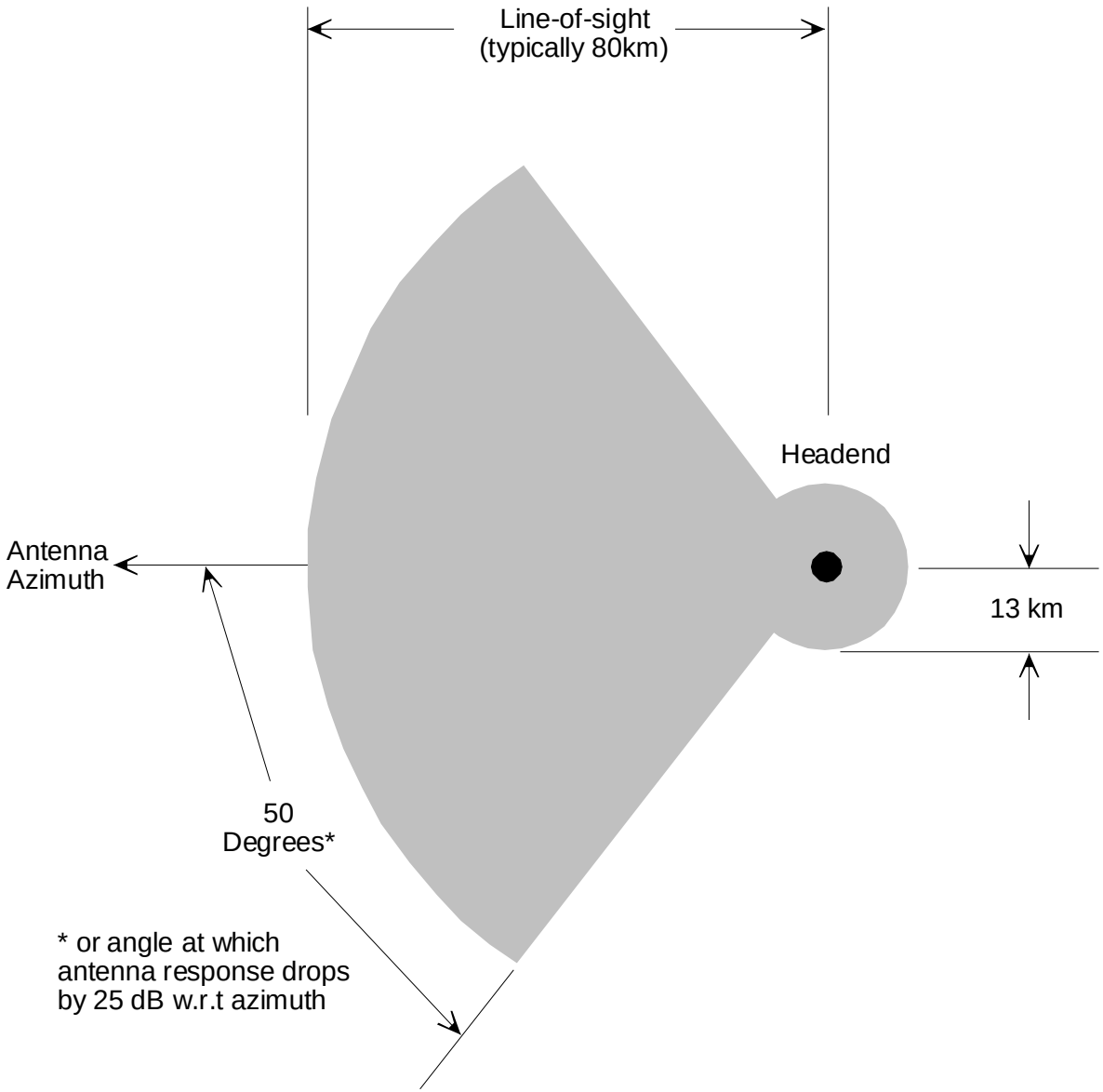

Figure 6: Area Required to Protect Against Portable Device Transmissions

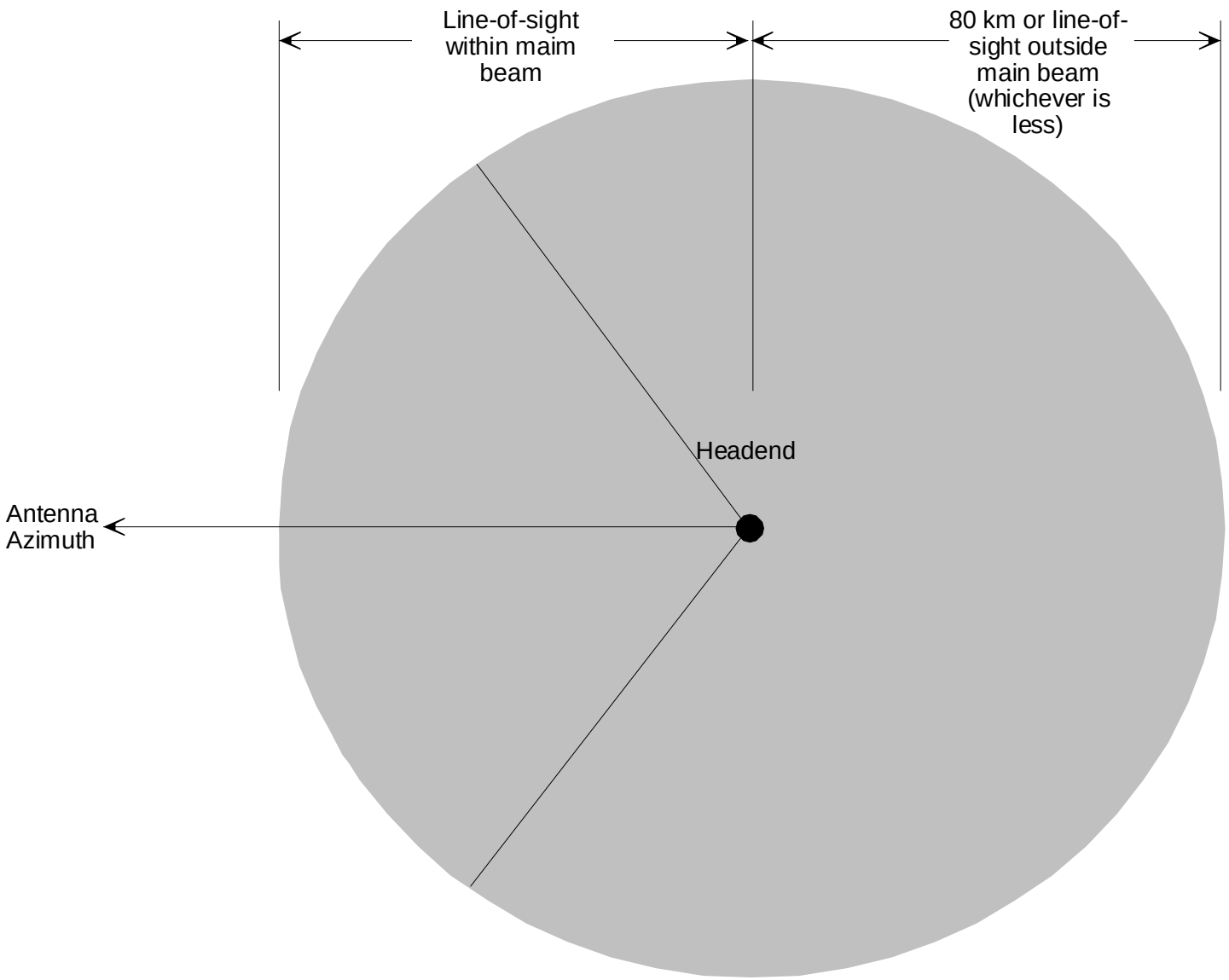

Figure 7: Area Required to Protect Against Fixed Device Transmissions

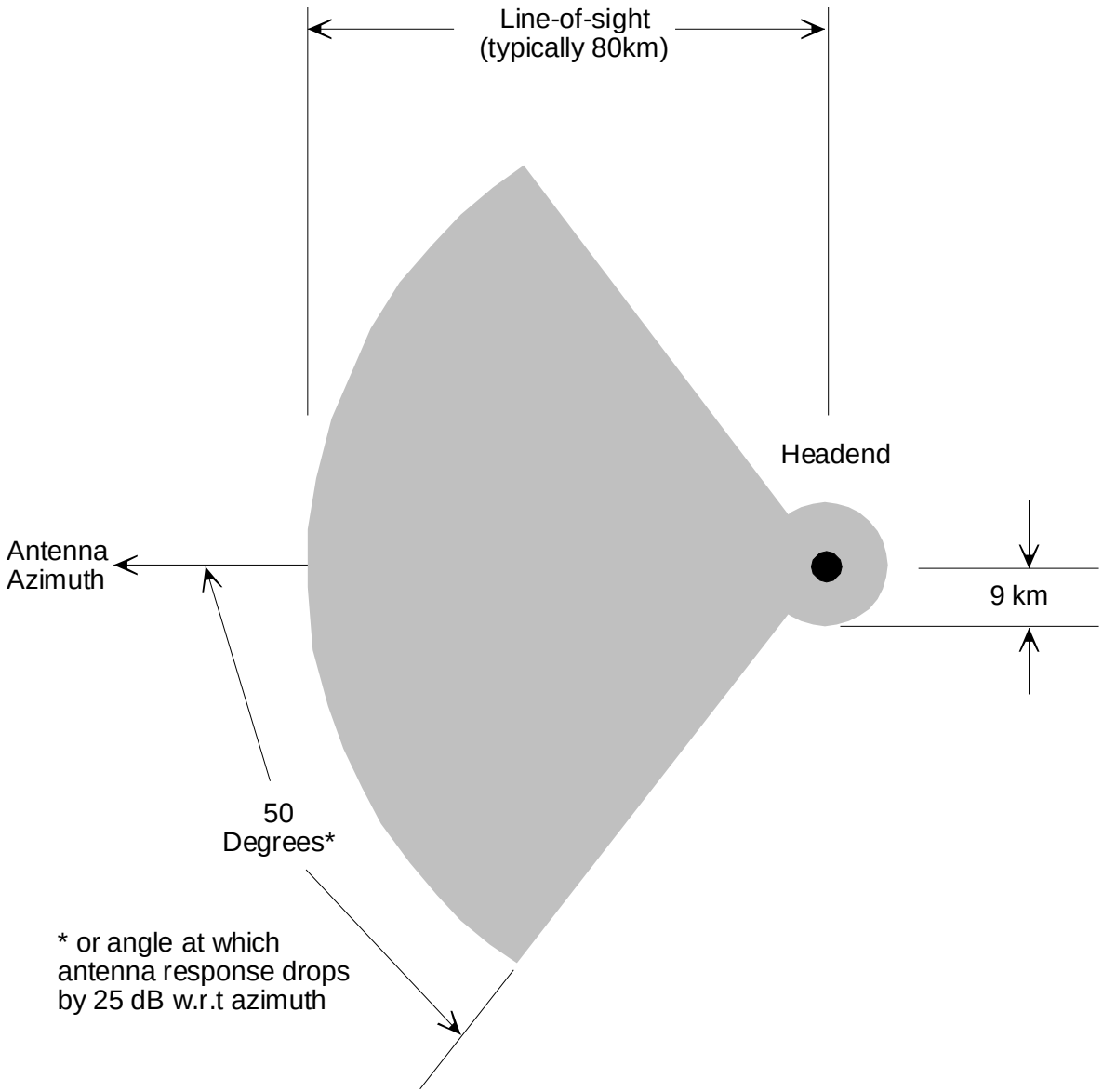

Figure 8: Area Required to Protect Against 50 mW Device Transmissions

APPENDIX I

Test Results Report
TVBD DPU Interference
December 2008

1.0 Introduction

On November 14, 2008, the FCC released a Second Report and Order and Memorandum Opinion and Order adopting rules to allow unlicensed radio transmitters to operate in the broadcast television spectrum at locations where that spectrum is not being used by licensed services (this unused TV spectrum is often termed "white spaces"). Part 15 of Title 47 of the Code of Federal Regulations was amended to create Subpart H, rules governing Television Band Devices (TVBD's).

The new rules allow for the operation of two types of unlicensed TVBD's that may provide broadband data and other types of communications services: 1) fixed devices (FD's), which may operate from a fixed location with radiated powers up to 4 Watts and, 2) personal/portable devices (PPD's) which may operate with radiated powers up to 100 milliWatts (mW).

In order to operate without causing interference to licensed services, both types of devices are required to be able to reliably determine which channels are occupied by licensed over-the-air television signals at their location. If a signal is determined to be present at the device location, the device would be prohibited from transmitting on that channel. In accordance with the new rules, the devices will be required to identify unused channels as follows:

a) An FD must employ both geo-location/database access and spectrum sensing capabilities that enable the device to listen for and identify the presence of signals from other transmitters;

b) A PPD must either 1) be under the control of an FD or a PPD that employs geo-location/database access and spectrum sensing or 2) employs geo-location/database access and spectrum sensing itself.

In general terms, the new rules permit a maximum radiated power level of 100 milliWatts relative to an isotropic antenna (100 mW EIRP) for PPD's in an indoor transmission environment that would be typically found in a consumer's

residence. FD's are allowed a maximum radiated power of 4 watts EIRP in an outdoor transmission environment, further away from residential TV receivers.

The new rules have provisions to protect existing over-the-air television signals through the above cited methods, however the new rules may not adequately address issues of Direct Pickup Interference (DPU) to consumer television receivers connected to a standard Cable TV input. When a receiver is tuned to a cable channel and a strong ambient signal is present from a source, such as a local TVBD device, DPU interference can result due to the receiver's susceptibility to co-channel RF ambient fields. Since the cable television system utilizes all spectrum in which TVDB devices are authorized to operate, the potential for interference is present anytime a TVDB device transmits. Prior to the adoption of the new TVBD rules, the primary source of DPU interference, (specific to the reception of cable television) was over-the-air television broadcast signals. Although the TVBD's will radiate far less power than a television broadcast station, the proximity of these devices to television receivers within the home, combined with the potential for widespread use of these devices, may result in widespread DPU interference to cable television reception.

In an effort to determine the potential for interference from TVBD's, the National Cable Telecommunications Association ("NCTA") contracted the Carl T. Jones Corporation to design and perform tests on a sample of television receivers to assess their susceptibility to TVBD DPU interference.

Section 2 of this report provides a discussion of the test procedures and equipment used to perform the tests and Section 3 provides the test results for a sample of seven television receivers.

2.0 Test Equipment and Procedures to Evaluate Television Receiver Susceptibility to TVBD DPU Interference

An indoor test range was established within a large conference room at the Cox Cable maintenance facility in Springfield, Virginia, for the purpose of evaluating the susceptibility of television receivers to TVBD DPU interference. The test range was equipped with a tripod-mounted, log periodic transmitting antenna, a non-metallic turntable on which each test receiver was located, a 12 ft. x 20 ft. ground screen, and 55 blocks of anechoic RF absorptive material located around the perimeter of the range to reduce room reflections (to ensure field uniformity over the area occupied by the receiver under test). A photograph of the test range with a receiver located on the turntable is contained in Figure 1.

Figure 1 – Test Range with Recevier on Turntable

The test range was calibrated at five test frequencies. The calibration procedure consisted of both field uniformity tests performed over the area to be occupied by the test receivers and absolute radiated field strength tests performed at each of the test frequencies for both vertical and horizontal polarizations.

2.1 Field Uniformity Calibration

Field uniformity measurements were performed at a distance of three meters from the transmitting antenna. For this test, a small dipole antenna was used as a receive antenna. For a fixed transmitting antenna input power, the received power from the dipole antenna was measured for each of twelve positions spaced over a plane representing the area occupied by a typical television receiver under test. The photograph of Figure 2 shows the field uniformity test configuration with the dipole antenna vertically polarized at one of the twelve test locations.

Several trial iterations of this test were performed as the anechoic RF absorptive material was repositioned along the perimeter of the test range to produce improved uniformity performance. Further, it was determined during this iterative process that performance was further improved at the UHF test frequencies by adding four additional blocks of material on the ground plane as shown in the photograph of Figure 2. This anechoic material on the ground plane was removed for the tests performed at the VHF test frequencies. After the iterative trials were completed, a final field uniformity of ± 3.5 dB, or better, was achieved

at all five test frequencies for both vertically and horizontally polarized incident fields.

Figure 2 – Field Uniformity Test Configuration

2.2 Absolute Field Strength Calibration

To evaluate the susceptibility of a television receiver to a TVBD radiated field it is necessary to know with certainty the field strength that is incident at the receiver. Therefore, for each test frequency and each polarity, the test range was calibrated to establish the correspondence between the interfering signal generator[1] output power and the incident field strength at the receiver.

Prior to performing the field strength calibration tests, the receiving dipole antenna factor was determined for each test frequency and the cable loss was measured so that at each test frequency the measured received power could be readily converted to a field strength. A tuned dipole (adjusted for each frequency) was positioned 3 meters from the transmitting antenna. The center of this receiving dipole was aligned with the horizontal and vertical center of the transmitting antenna. A block diagram of the field strength calibration test equipment configuration is contained in Figure 3 and a photograph showing the tuned dipole positioned above the turntable is shown in Figure 4.

With the interfering signal turned off a field strength measurement of -57 dBm verified the absence of any strong spurious or otherwise unidentified emissions in the frequency range under test..

[1] Agilent MXG Vector Signal Generator AT/N5182A/506;O S/N MY46240087 calibrated 5/9/2008

The theoretical field strength, at a distance of three meters from the transmitting antenna for radiated power 100 mW EIRP, is 577 milliVolts per meter (mV/m). For each test frequency and for each polarity, the vector signal generator ("VSG") was adjusted to produce a measured received power corresponding to an incident field strength of 577 mV/m. The output power of the vector signal

Figure 3 – Field Strength Calibration Test Setup Diagram[2/3]

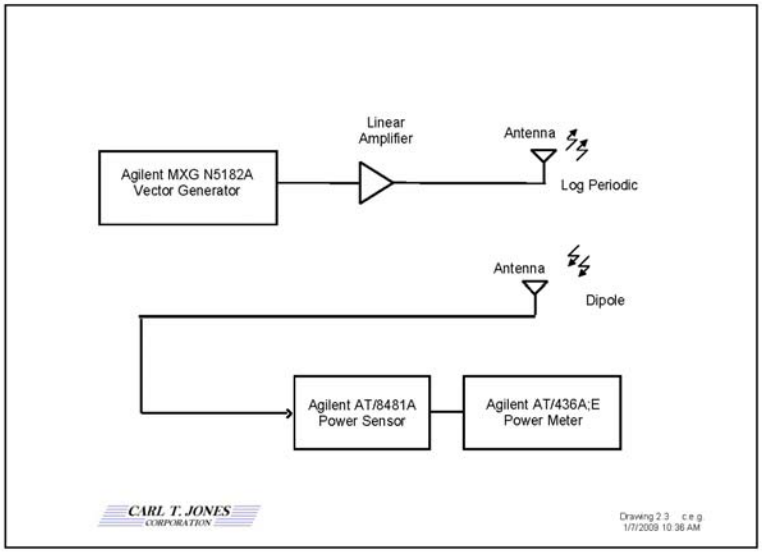

Figure 4 – Tuned Dipole above Turntable

[2] Agilent Power Meter AT/436A;E S/N 2732A20136 calibrated 9/9/2008
[3] Power Sensor AT/8481A S/N 3318A83689 calibrated 9/18/2008

generator was then recorded. This procedure provided the necessary correspondence between the interfering signal generator output power and the incident field at the receiver. In performing this procedure, any ambiguity in incident field strength associated with ground reflections is removed.

2.3 Simulated TVBD Interfering Signal

The simulated TVBD interfering signal was generated by an Agilent Vector Signal Generator ("VSG"). The VSG is capable of generating a band-limited Gaussian white noise signal having spectral characteristics that are the same as those of a TVBD signal. A spectral plot of the simulated TVBD signal is shown in Figure 5.

Figure 5 – Spectral Plot of Simulated TVBD Interfering Signal

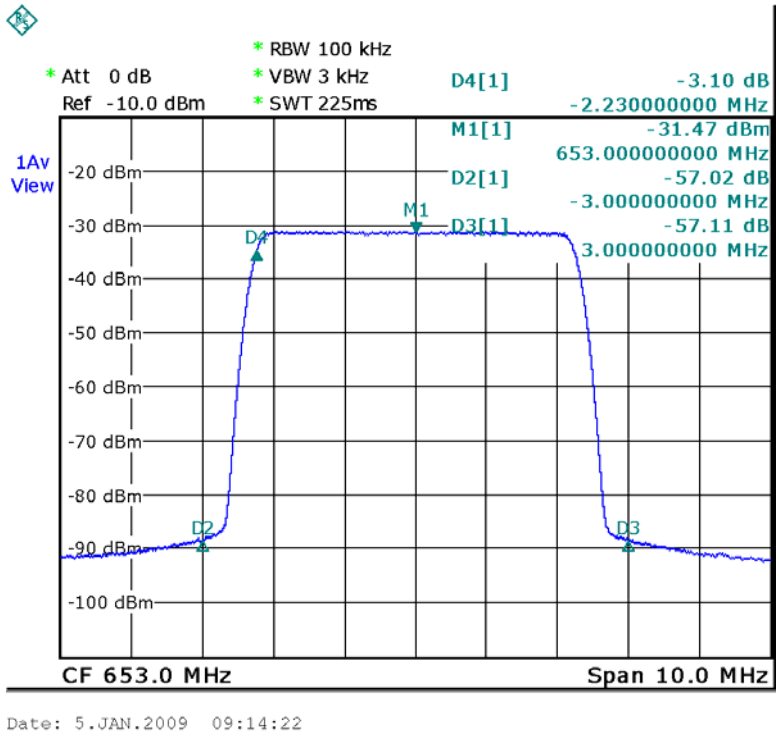

For each test frequency, the generator was adjusted for the frequency corresponding to the center of the selected 6 MHz broadcast channel. The 3 dB bandwidth of the interfering signal was then adjusted for approximately 4.5 MHz and the attenuation at the band edge was verified to be 55 dB or greater below the carrier level as shown in Figure 5.

Figure 6 shows a block diagram of the test equipment setup. In order to achieve the required radiated power level, the output of the VSG was amplified using an Amplifier Research, Model 5W1000, 5 Watt, linear power amplifier. The

amplifier output was then fed through a coaxial switch and low-loss coaxial cable to an Electro-Metrics, Model LPA-25, log periodic transmitting antenna. The coaxial switch provided the test engineer with the ability to redirect the amplified signal through an attenuator to a spectrum analyzer[4] to verify the frequency and spectral mask of the amplified interfering signal prior to each test.

Figure 6 – Test Equipment Setup Diagram

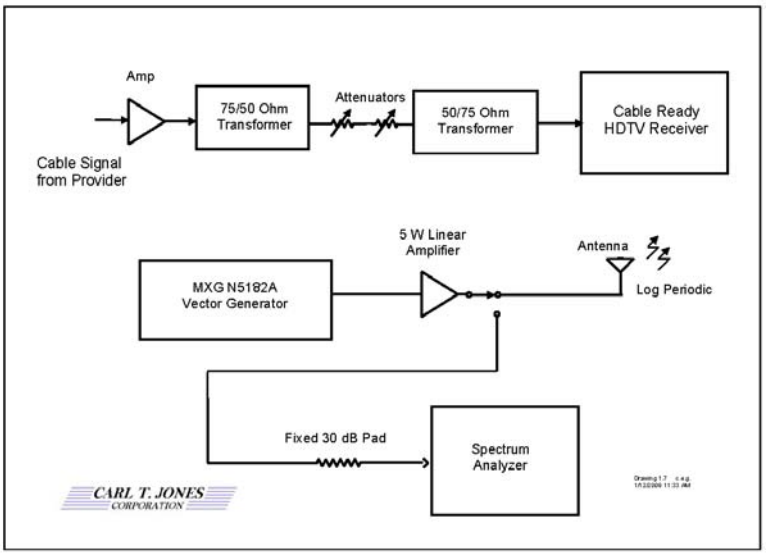

2.4 Desired Cable Signal Level

The Digital Cable Network Interface Standard, ANSI/SCTE 40 2004, specifies a minimum signal level at the television receiver input of -12 dBmV for a 256 QAM digital signal and 0 dBmV (visual carrier) for an analog signal. All digital and analog susceptibility tests were performed with the minimum signal level present at the input to the receiver.

Cox Cable provided a cable drop to the test room. A standard fixed gain cable amplifier in combination with two variable step attenuators were used to achieve the desired signal level for each test channel.

2.5 Test Channels

Test channels were selected to evaluate DPU interference susceptibility for both analog signal TV reception and digital signal reception since both types are commonly used by today's Cable TV service providers. Although analog signal reception deteriorates much more gracefully than does digital signal reception, in each case there is a DPU interference threshold at which interference artifacts

[4] Rohde & Schwarz Spectrum Analyzer R&S/FSL3;A S/N 100359 calibrated 6/11/2008

appear in the received picture. With digital signals there is also a point not far from the first appearance of artifacts where the picture freezes or a blue screen appears.

After reviewing the Cox Cable channel plan, four cable channels were selected for testing. Both analog and 256 QAM digital channels were selected. In the VHF band, EIA cable channel 12 was selected for testing analog reception and EIA cable channel 13 was selected for testing interference susceptibility for 256 QAM digital reception. In the UHF band, it was determined that there were no "clear" (unencrypted) QAM channels available in the 512 MHz to 606 MHz and 614 MHz to 698 MHz bands where PPD's are permitted to operate. Since no "clear" QAM channels were available, the closest QAM channel to the desired UHF band was selected. This test channel was EIA cable channel 36 (294MHz to 300 MHz). EIA cable channel 101 was selected for testing analog reception in the UHF band. The table below summarizes the desired and interfering signal channels and frequencies.

Table 1 - Test Channels and Interfering Signals

Desired Cable Signal			Undesired Interfering Signal	
EIA/NCTA Channel Designation	Modulation Type	Frequency (MHz)	Broadcast Channel	Center Frequency (MHz)
12	Analog	204 - 210	12	207
13	256 QAM	210 - 216	13	213
36	256 QAM	294 - 300	N/A	297
101	Analog	654 - 660	44	653
101	Analog	654 - 660	45	659

Because broadcast channels 44 and 45 overlap the spectrum occupied by Cable Channel 101, two separate tests were performed: one with the interfering signal centered in the broadcast channel 44 spectrum, and a second test with the interfering signal centered in the broadcast channel 45 spectrum.

2.6 Test Receivers

A total of seven receivers were tested. Five of the receivers were manufactured in 2008 and therefore were equipped with digital tuners. Among these five were some listed by major retail outlets as top-selling receivers. Two receivers were legacy receivers equipped with analog tuners only. One legacy

receiver was manufactured in 2004 while the second was manufactured in 1995 (prior to the FCC adopting the "cable ready" Rules). A description of the test receivers is contained in the Table below.

Table 2 – Test Receiver Description

Television #	Tuner Type	Screen Size (Inches)	Date of Manufacture
1	Digital/Analog	22	2008
2	Digital/Analog	26	2008
3	Digital/Analog	32	2008
4	Digital/Analog	32	2008
5	Digital/Analog	19	2008
6	Analog Only	26	2004
7	Analog Only	25	1995

2.7 Test Procedure

Figure 7 shows a sketch of the test setup and equipment placement. The test receiver was placed on the turntable facing the interfering signal transmitting antenna. The receiver height was then adjusted using non-metallic spacers until the center of the receiver was at a height of 129 cm above the floor (the same height as the interfering signal transmitting antenna). The cable input signal attenuators were set for the selected test channel. Then, the input cable was connected to the receiver, and the receiver was tuned to the first test channel. The picture was viewed to ensure that the picture was unimpaired.

The interfering signal generator (VSG) was then turned on at an output power level that was well below the level corresponding to a radiated power of 100 mW EIRP. The transmitting antenna was oriented to be vertically polarized. While viewing the picture, the interfering signal generator output was slowly increased until just perceptible interference was visible in the picture. In the case of a digital signal, this was the level at which digital artifacts, such as tiling, were present in the picture. The output level of the VSG was then recorded.

Figure 7 – Test Setup and Equipment Placement Sketch

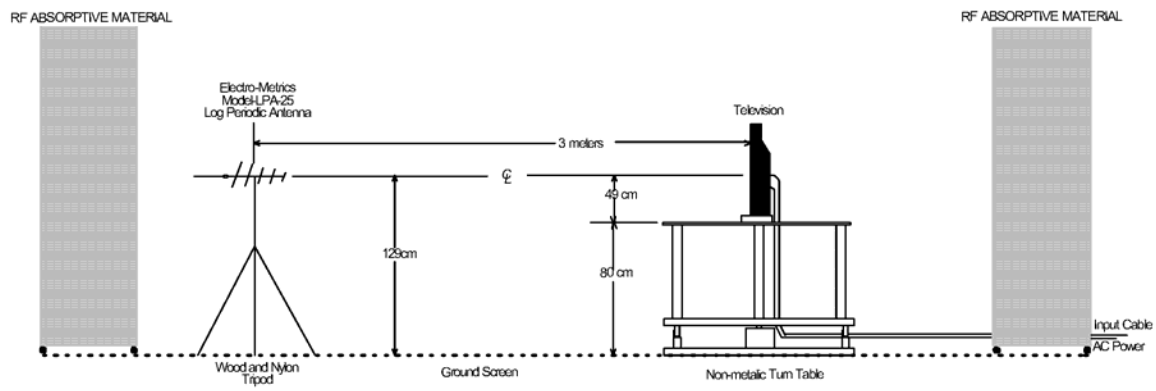

In the case of a 256 QAM digital picture, the output of the VSG interfering signal generator was increased further, in 0.1 dB steps, until picture “freeze” occurred or a blue screen appeared. The generator output level required to produce total picture reception failure was then recorded.

This procedure was repeated three additional times for counterclockwise rotation of the receiver to 90, 180 and 270 degree orientations with the respect to the transmitting antenna. The entire procedure was then repeated for horizontal polarization of the transmitting antenna. Once all four orientations were tested for both transmitting antenna polarizations, the entire procedure was repeated for each of the remaining test channels.

3.0 Test Results

The results of the tests performed to evaluate receiver susceptibility to TVBD DPU interference are presented in this report in terms of the incident field strength required to cause just perceptible interference to the received picture. In addition, the corresponding radiated power level is presented, for the test distance of 3 meters, to allow direct comparison to maximum authorized radiated power levels of 100 mW for PPD devices and 4 watts (4,000 mW) for FD devices. Test results are presented for four orientations of the receiver under test and for both vertical and horizontal polarizations of the incident interfering signal.

Tests were performed at the Cox Cable facility in Springfield, Virginia to evaluate interference when the test receiver was tuned to both 256 QAM digital channels (EIA/NCTA Channels 13 and 36) and to NTSC analog channels (EIA/NCTA Channels 12 and 101). The TVDB DPU interference test results for the 256

QAM digital channels are contained in Section 3.1 and the test results for the NTSC analog channels are contained in Section 3.2.

3.1 TVBD DPU Interference to Digital Reception

Table 3 and 4 contain the test results for tests performed with each test receiver tuned to 256 QAM digital channels 13 (210 to 216 MHz) and 36 (294 to 300 MHz), respectively. Results are presented for the five test receivers that were equipped with digital tuners. With the test receiver tuned to a digital channel, just perceptible interference was defined for this test as the onset of intermittent tiling in the picture. The process of determining this onset threshold was to increase the interfering signal in 0.1 dB steps until intermittent tiling was observed and then reduce the signal strength 0.1 dB to insure that the intermittent tiling was eliminated. After determining the just perceptible interference threshold or tiling onset threshold, the interfering signal level was increased in 0.1 dB increments until either a picture freeze or blue screen condition was observed. On average the picture freeze or blue screen condition occurred with an interfering signal level 1 dB greater than the intermittent tiling onset level.

Table 3 contains a tabulation of the receiver susceptibility results for cable channel 13. Since in this case broadcast channel 13 and cable channel 13 occupy the same 6 MHz spectrum, all of the interfering signal power falls within the 6 MHz band of the desired cable channel. Based on the tabulations contained in Table 3, the maximum susceptibility (lowest field strength required to cause just perceptible interference) ranged from 19.1 mV/m (receiver #4, vertical polarization) to 90.4 mV/m (receiver #1, horizontal polarization), corresponding to a radiated power range at 3 meters of 0.11 to 2.45 mW EIRP.

Table 4 contains the test results for cable channel 36. Since there is no corresponding broadcast channel to cable channel 36, the interfering signal was centered in the cable channel 36 band such that all of the interfering signal power fell within the 6 MHz band occupied by channel 36. For this channel the maximum susceptibility ranged from 18.7 mV/m (receiver #4, horizontal polarization) to 127.6 mV/m (receiver #1, horizontal polarization), corresponding to a radiated power range at 3 meters of 0.11 to 4.89 mW EIRP.

Table 5 provides a summary of the maximum susceptibility of each receiver for each polarity and a summary of the average susceptibility for each receiver for each polarity. The average susceptibility was calculated by averaging the “just perceptible” (tiling onset) field strength values for all four receiver orientations. The average receiver susceptibility ranged from 39 mV/m (receiver #4, Ch 13, vertical polarity) to 205.8 mV/m (receiver #1, Ch 13, horizontal polarity), corresponding to a radiated power at 3 meters of 0.46 mW to 12.72 mW.

3.2 TVDB DPU Interference to Analog Reception

Tables 6, 7 and 8 contain the receiver susceptibility test results for tests performed with each test receiver tuned to analog cable channels 12 (204 to 210 MHz) and 101 (654 to 650 MHz). Broadcast channels 44 and 45 each overlap a portion of the 6 MHz cable channel 101 spectrum and, therefore separate tests were performed for interfering signals centered in the broadcast channel 44 spectrum and centered in the broadcast channel 45 spectrum.

Table 6 contains a tabulation of the receiver susceptibility results for cable channel 12. Since broadcast channel 12 and cable channel 12 occupy the same 6 MHz spectrum, all of the interfering signal power falls within the 6 MHz band of the desired cable channel. Based on the tabulations contained in Table 6, the maximum susceptibility ranged from 14.9 mV/m (receiver #3, vertical polarization) to 262.8 mV/m (receiver #6, horizontal polarization), corresponding to a radiated power range at 3 meters of 0.07 to 20.75 mW EIRP.

Table 7 is a tabulation of the receiver susceptibility results for analog cable channel 101 with an interfering signal centered in the broadcast channel 44 spectrum. Because of the offset between cable and broadcast channels, the interfering signal overlaps only the lower 1.25 MHz of the cable channel 101 spectrum. From Table 7, maximum susceptibility ranged from 76.9 mV/m (receiver #7, horizontal polarization) to 929 mV/m (receiver #5, vertical polarization), corresponding to a radiated power range of 1.78 mW to 259.42 mW.

Table 8 contains a tabulation of receiver susceptibility test results for cable channel 101 with an interfering signal centered in the broadcast channel 45 spectrum. In this case, the interfering signal overlaps the upper 3.25 MHz of the cable channel 101 spectrum. From Table 8, maximum susceptibility ranged from 38.6 mV/m (receiver #2, horizontal polarization) to 359.9 mV/m (receiver #6, vertical polarization), corresponding to a radiated power range of 0.45 mW to 38.91 mW.

Table 9 provides a summary of the maximum and average susceptibility of each of the seven test receivers. The average susceptibility for a receiver tuned to cable channel 12 ranged from 29 mV/m (receiver #5, vertical polarity) to 491 mV/m (receiver #6, horizontal polarity), corresponding to a radiated power range of 0.25 mW to 72.42 mW. The average susceptibility for a receiver tuned to cable channel 101 ranged from 87.9 mV/m (receiver #2, vertical polarity, channel 45 interfering signal) to 2354.5 mV/m (receiver #3, vertical polarity, Ch 44 interfering signal), corresponding to a radiated power range of 2.32 mW to 1,665 mW.

Table 3 – Receiver Susceptibility Results for Cable Channel 13

Field Strength and Equivalent EIRP*
Required to Produce Just Perceptible Interference on Cable Channel 13
From an Interfering Signal on Broadcast Channel 13**

		Vertical Polarization		Horizontal Polarization	
Television	Orientation	F.S. (mV/m)	Equiv. EIRP (mW)	F.S. (mV/m)	Equiv. EIRP (mW)
#1	0	142.95	6.14	526.23	83.18
	90	79.46	1.90	100.27	3.02
	180	35.91	0.39	106.21	3.39
	270	61.68	1.14	90.40	2.45
#2	0	51.31	0.79	168.34	8.51
	90	54.35	0.89	59.04	1.05
	180	30.92	0.29	49.11	0.72
	270	45.20	0.61	29.93	0.27
#3	0	66.10	1.31	91.45	2.51
	90	84.17	2.13	72.64	1.58
	180	21.39	0.14	45.83	0.63
	270	41.70	0.52	53.23	0.85
#4	0	46.26	0.64	197.78	11.75
	90	67.64	1.37	42.28	0.54
	180	22.92	0.16	27.62	0.23
	270	19.06	0.11	34.37	0.35
#5	0	23.18	0.16	116.46	4.07
	90	75.89	1.73	97.99	2.88
	180	67.64	1.37	73.48	1.62
	270	45.20	0.61	56.39	0.95

** At the listed EIRP just perceptible interference was observed at the test distance of 3 meters.*

*** Interfering Signal Center Frequency = 213 MHz; Desired Cable Signal Input Level = -12 dBmV.*

Table 4– Receiver Susceptibility Results for Cable Channel 36

Field Strength and Equivalent EIRP*
Required to Produce Just Perceptible Interference on Cable Channel 36
From an Interfering Signal on 297 MHz

		Vertical Polarization		Horizontal Polarization	
Television	Orientation	F.S. (MV/M)	Equiv. EIRP (MW)	F.S. (MV/M)	Equiv. EIRP (MW)
#1	0	35.95	0.39	149.86	6.75
	90	67.71	1.38	299.00	26.85
	180	184.36	10.21	127.55	4.89
	270	355.37	37.93	219.12	14.42
#2	0	109.82	3.62	119.04	4.26
	90	166.22	8.30	224.22	15.10
	180	90.30	2.45	123.22	4.56
	270	359.48	38.82	63.19	1.20
#3	0	119.04	4.26	82.35	2.04
	90	130.52	5.12	75.98	1.73
	180	79.56	1.90	174.05	9.10
	270	120.41	4.36	42.72	0.55
#4	0	46.31	0.64	41.27	0.51
	90	102.49	3.16	139.85	5.87
	180	23.48	0.17	58.30	1.02
	270	20.45	0.13	18.65	0.10
#5	0	49.62	0.74	47.39	0.67
	90	50.20	0.76	42.72	0.55
	180	126.09	4.78	76.86	1.77
	270	117.67	4.16	76.86	1.77

** At the listed EIRP just perceptible interference was observed at the test distance of 3 meters.*

*** Interfering Signal Center Frequency = 297 MHz, Desired Cable Signal Input Level = -12 dBmV*

Table 5 – Summary of Susceptibility Results for Cable Channels 13 & 36

Summary of Maximum Receiver Susceptibility
to TVBD DPU Interference
Desired Signal 256 QAM

Television	Desired Cable Signal	Undesired Broadcast Signal	Vertical Polarization		Horizontal Polarization	
			F.S. (mV/m)	Equiv. EIRP (mW)	F.S. (mV/m)	Equiv. EIRP (mW)
1	*13*	*13*	35.9	0.39	90.4	2.45
	36	*N/A***	36.0	0.39	127.6	4.89
2	*13*	*13*	30.9	0.29	29.9	0.27
	36	*N/A***	90.3	2.45	63.2	1.20
3	*13*	*13*	21.4	0.14	45.8	0.63
	36	*N/A***	79.6	1.90	42.7	0.55
4	*13*	*13*	19.1	0.11	27.6	0.23
	36	*N/A***	20.5	0.13	18.7	0.11
5	*13*	*13*	23.2	0.16	56.4	0.96
	36	*N/A***	49.6	0.74	42.7	0.55

Summary of Average Receiver Susceptibility
to TVBD DPU Interference
Desired Signal 256 QAM

Television	Desired Cable Signal	Undesired Broadcast Signal	Vertical Polarization		Horizontal Polarization	
			F.S. (mV/m)	Equiv. EIRP (mW)	F.S. (mV/m)	Equiv. EIRP (mW)
1	*13*	*13*	80.0	1.92	205.8	12.72
	36	*N/A***	160.9	7.78	198.9	11.88
2	*13*	*13*	45.4	0.62	76.6	1.76
	36	*N/A***	181.5	9.89	132.4	5.27
3	*13*	*13*	53.3	0.85	65.8	1.30
	36	*N/A***	112.4	3.79	93.8	2.64
4	*13*	*13*	39.0	0.46	75.5	1.71
	36	*N/A***	48.2	0.70	64.5	1.25
5	*13*	*13*	53.0	0.84	86.1	2.23
	36	*N/A***	85.9	2.22	61.0	1.12

** At the listed EIRP just perceptible interference was observed at the test distance of 3 meters.** Interfering Signal Center Frequency = 297 MHz*

Table 6 – Receiver Susceptibility Results for Cable Channel 12

Field Strength and Equivalent EIRP*
Required to Produce Just Perceptible Interference on Cable Channel 12
From an Interfering Signal on Broadcast Channel 12**

		Vertical Polarization		Horizontal Polarization	
Television	Orientation	F.S. (mV/m)	Equiv. EIRP (mW)	F.S. (mV/m)	Equiv. EIRP (mW)
#1	0	44.33	0.59	165.83	8.26
	90	52.68	0.83	46.74	0.66
	180	23.53	0.17	165.83	8.26
	270	41.85	0.53	66.02	1.31
#2	0	52.68	0.83	186.07	10.40
	90	74.42	1.66	52.44	0.83
	180	29.63	0.26	104.63	3.29
	270	93.69	2.64	52.44	0.83
#3	0	29.63	0.26	93.26	2.61
	90	52.68	0.83	52.44	0.83
	180	14.85	0.07	37.13	0.41
	270	37.30	0.42	33.09	0.33
#4	0	166.60	8.34	234.25	16.48
	90	74.42	1.66	29.49	0.26
	180	20.97	0.13	46.74	0.66
	270	26.40	0.21	66.02	1.31
#5	0	29.63	0.26	165.83	8.26
	90	29.63	0.26	74.08	1.65
	180	23.53	0.17	66.02	1.31
	270	33.24	0.33	46.74	0.66
#6	0	372.97	41.78	588.40	103.99
	90	235.33	16.63	588.40	103.99
	180	148.48	6.62	262.83	20.75
	270	132.34	5.26	524.42	82.60
#7	0	52.68	0.83	262.83	20.75
	90	93.69	2.64	83.11	2.07
	180	37.30	0.42	165.83	8.26
	270	66.32	1.32	83.11	2.07

** At the listed EIRP just perceptible interference was observed at the test distance of 3 meters. ** Interfering Signal Center Frequency = 207 MHz, Desired Cable Signal Input Level = 0 dBmV*

Table 7 – Receiver Susceptibility Results for Cable Channel 101 for interfering signal on Broadcast Channel 44

Field Strength and Equivalent EIRP*
Required to Produce Just Perceptible Interference on Cable Channel 101
From an Interfering Signal on Broadcast Channel 44**

		Vertical Polarization		Horizontal Polarization	
Television	Orientation	F.S. (mV/m)	Equiv. EIRP (mW)	F.S. (mV/m)	Equiv. EIRP (mW)
#1	0	429.71	55.46	432.69	56.23
	90	329.74	32.66	229.71	15.85
	180	329.74	32.66	432.69	56.23
	270	586.38	103.28	432.69	56.23
#2	0	208.05	13.00	485.48	70.79
	90	208.05	13.00	153.52	7.08
	180	147.29	6.52	863.33	223.87
	270	415.12	51.76	96.87	2.82
#3	0	415.12	51.76	243.32	17.78
	90	1042.74	326.59	108.69	3.55
	180	465.77	65.16	432.69	56.23
	270	1169.97	411.15	8633.28	22387.21
#4	0	369.98	41.11	343.70	35.48
	90	586.38	103.28	121.95	4.47
	180	185.43	10.33	243.32	17.78
	270	147.29	6.52	968.67	281.84
#5	0	586.38	103.28	432.69	56.23
	90	929.34	259.42	273.01	22.39
	180	1472.91	651.63	1219.48	446.68
	270	2334.40	1636.82	611.19	112.20
#6	0	1652.63	820.35	432.69	56.23
	90	929.34	259.42	485.48	70.79
	180	415.12	51.76	611.19	112.20
	270	929.34	259.42	306.32	28.18
#7	0	293.88	25.94	172.26	8.91
	90	117.00	4.11	216.86	14.13
	180	92.93	2.59	76.94	1.78
	270	131.27	5.18	485.48	70.79

** At the listed EIRP just perceptible interference was observed at the test distance of 3 meters.** Interfering Signal Center Frequency = 653 MHz, Desired Cable Signal Input Level = 0 dBmV*

Table 8 – Receiver Susceptibility Results for Cable Channel 101 for interfering signal on Broadcast Channel 45

Field Strength and Equivalent EIRP*
Required to Produce Just Perceptible Interference on Cable Channel 101
From an Interfering Signal on Broadcast Channel 45**

		Vertical Polarization		Horizontal Polarization	
Television	Orientation	F.S. (mV/m)	Equiv. EIRP (mW)	F.S. (mV/m)	Equiv. EIRP (mW)
#1	0	209.50	13.18	343.70	35.48
	90	227.08	15.49	136.83	5.62
	180	269.88	21.88	306.32	28.18
	270	254.79	19.50	193.28	11.22
#2	0	101.43	3.09	306.32	28.18
	90	71.81	1.55	96.87	2.82
	180	50.84	0.78	136.83	5.62
	270	127.70	4.90	38.56	0.45
#3	0	320.76	30.90	863.33	223.87
	90	508.37	77.62	96.87	2.82
	180	202.38	12.30	172.26	8.91
	270	453.08	61.66	769.44	177.83
#4	0	254.79	19.50	172.26	8.91
	90	254.79	19.50	136.83	5.62
	180	57.04	0.98	86.33	2.24
	270	80.57	1.95	216.86	14.13
#5	0	180.37	9.77	153.52	7.08
	90	202.38	12.30	136.83	5.62
	180	403.81	48.98	685.77	141.25
	270	453.08	61.66	216.86	14.13
#6	0	639.99	123.03	343.70	35.48
	90	718.08	154.88	306.32	28.18
	180	359.90	38.90	385.63	44.67
	270	453.08	61.66	485.48	70.79
#7	0	180.37	9.77	108.69	3.55
	90	113.81	3.89	153.52	7.08
	180	45.31	0.62	86.33	2.24
	270	113.81	3.89	273.01	22.39

** At the listed EIRP just perceptible interference was observed at the test distance of 3 meters.** Interfering Signal Center Frequency = 659 MHz, Desired Cable Signal Input Level = 0 dBmV*

Table 9 Sheet 1 of 2 – Summary of Susceptibility Results for Cable Channels 12 & 101

Summary of Maximum Receiver Susceptibility
to TVBD DPU Interference
Desired Signal NTSC Analog

Television	Desired Cable Signal	Undesired Broadcast Signal	Vertical Polarization		Horizontal Polarization	
			F.S. (mV/m)	Equiv. EIRP (mW)	F.S. (mV/m)	Equiv. EIRP (mW)
1	*12*	*12*	23.5	0.17	46.7	0.66
	101	*44*	329.7	32.66	229.7	15.85
	101	*45*	227.1	15.49	136.8	5.62
2	*12*	*12*	29.6	0.26	52.4	0.83
	101	*44*	147.3	6.52	96.9	2.82
	101	*45*	50.8	0.78	38.6	0.45
3	*12*	*12*	14.9	0.07	33.1	0.33
	101	*44*	415.1	51.76	108.7	3.55
	101	*45*	202.4	12.30	96.9	2.82
4	*12*	*12*	21.0	0.13	29.5	0.26
	101	*44*	147.3	6.52	122.0	4.47
	101	*45*	57.0	0.98	86.3	2.24
5	*12*	*12*	23.5	0.17	46.7	0.66
	101	*44*	929.3	259.42	273.0	22.39
	101	*45*	202.4	12.30	136.8	5.62
6	*12*	*12*	132.3	5.26	262.8	20.75
	101	*44*	415.1	51.76	306.3	28.18
	101	*45*	359.9	38.91	306.3	28.18
7	*12*	*12*	37.3	0.42	83.1	2.07
	101	*44*	92.9	2.59	76.9	1.78
	101	*45*	45.3	0.62	86.3	2.24

** At the listed EIRP just perceptible interference was observed at the test distance of 3 meters.*

Table 9 Sheet 2 of 2 – Summary of Susceptibility Results for Cable Channels 12 & 101

Summary of Average Receiver Susceptibility
to TVBD DPU Interference
Desired Signal NTSC Analog

Television	Desired Cable Signal	Undesired Broadcast Signal	Vertical Polarization		Horizontal Polarization	
			F.S. (mV/m)	Equiv. EIRP (mW)	F.S. (mV/m)	Equiv. EIRP (mW)
1	*12*	*12*	40.6	0.50	111.1	3.71
	101	*44*	418.9	52.70	381.9	43.82
	101	*45*	240.3	17.35	245.0	18.03
2	*12*	*12*	62.6	1.18	98.9	2.94
	101	*44*	244.6	17.97	399.8	48.01
	101	*45*	87.9	2.32	144.6	6.28
3	*12*	*12*	33.6	0.34	54.0	0.88
	101	*44*	773.4	179.66	2354.5	1665.11
	101	*45*	371.2	41.38	475.5	67.90
4	*12*	*12*	72.1	1.56	94.1	2.66
	101	*44*	322.3	31.20	419.4	52.84
	101	*45*	161.8	7.86	153.1	7.04
5	*12*	*12*	29.0	0.25	88.2	2.34
	101	*44*	1330.8	531.92	634.1	120.77
	101	*45*	309.9	28.85	298.2	26.72
6	*12*	*12*	222.3	14.84	491.0	72.42
	101	*44*	981.6	289.42	458.9	63.26
	101	*45*	542.8	88.48	380.3	43.44
7	*12*	*12*	62.5	1.17	148.7	6.64
	101	*44*	158.8	7.57	237.9	17.00
	101	*45*	113.3	3.86	155.4	7.25

** At the listed EIRP just perceptible interference was observed at the test distance of 3 meters.*

APPENDIX II

Test Results Report
Television Band Devices Direct Pickup Interference
January 2009

1.0 Introduction

On November 14, 2008, the FCC released a Second Report and Order and Memorandum Opinion and Order adopting rules to allow unlicensed radio transmitters to operate in the broadcast television spectrum at locations where that spectrum is not being used by licensed services (this unused TV spectrum is often termed "white spaces"). Part 15 of Title 47 of the Code of Federal Regulations was amended to create Subpart H, rules governing Television Band Devices ("TVBD's").

The new rules allow for the operation of two types of unlicensed TVBD's that may provide broadband data and other types of communications services: 1) fixed devices (FD's), which may operate from a fixed location with radiated powers up to 4 Watts and, 2) personal/portable devices (PPD's) which may operate with radiated powers up to 100 milliWatts (mW).

In order to operate without causing interference to licensed services, both types of devices are required to be able to reliably determine which channels are occupied by licensed over-the-air television signals at their location. If a signal is determined to be present at the device location, the device would be prohibited from transmitting on that channel. In accordance with the new rules, the devices will be required to identify unused channels as follows:

a) An FD must employ both geo-location/database access and spectrum sensing capabilities that enable the device to listen for and identify the presence of signals from other transmitters;

b) A PPD must either 1) be under the control of an FD or a PPD that employs geo-location/database access and spectrum sensing or 2) employs geo-location/database access and spectrum sensing itself.

In general terms, the new rules permit a maximum radiated power level of 100 milliWatts relative to an isotropic antenna (100 mW EIRP) for PPD's in an indoor transmission environment that would be typically found in a consumer's

residence. FD's are allowed a maximum radiated power of 4 watts EIRP in an outdoor transmission environment, further away from residential TV receivers.

The new rules have provisions to protect existing over-the-air television signals through the above cited methods, however the new rules may not adequately address issues of Direct Pickup Interference (DPU) to consumer television receivers connected to a standard Cable TV input. When a receiver is tuned to a cable channel and a strong ambient signal is present from a source, such as a local TVBD device, DPU interference can result due to the receiver's susceptibility to co-channel RF ambient fields. Since the cable television system utilizes the entire spectrum in which TVBD devices are authorized to operate, the potential for interference is present anytime a TVBD device transmits. Prior to the adoption of the new TVBD rules, the primary source of DPU interference, (specific to the reception of cable television) was over-the-air television broadcast signals. Although the TVBD's will radiate far less power than a television broadcast station, the proximity of these devices to television receivers within the home or just outside of the home, combined with the potential for widespread use of these devices, may result in widespread DPU interference to cable television reception.

In an effort to determine the potential for interference from TVBD's, the National Cable Telecommunications Association ("NCTA") contracted the Carl T. Jones Corporation to design and perform tests on a sample of television receivers to assess their susceptibility to TVBD DPU interference.

Section 2 of this report provides a discussion of the test procedures and equipment used to perform the tests. Section 3 of this report provides the test results for a sample of seven television receivers.

2.0 Test Equipment and Procedures to Evaluate Television Receiver Susceptibility to TVBD DPU Interference

An indoor test range was established within a large conference room at the Cox Cable maintenance facility in Springfield, Virginia, for the purpose of evaluating the susceptibility of television receivers to TVBD DPU interference. The test range was equipped with a tripod-mounted, transmitting antenna, a non-metallic turntable on which each test receiver was located, a 12 ft. x 20 ft. ground screen, and 55 blocks of anechoic RF absorptive material located around the perimeter of the range to reduce room reflections (to ensure field uniformity over the area occupied by the receiver under test). A photograph of the test range with a receiver located on the turntable is contained in Figure 1.

Figure 1 – Test Range with Receiver on Turntable

The test range was calibrated at six test frequencies. The calibration procedure consisted of both field uniformity tests performed over the area to be occupied by the test receivers and absolute radiated field strength tests performed at each of the test frequencies for both vertical and horizontal polarizations.

2.1 Field Uniformity Calibration

Field uniformity measurements were performed at a distance of three meters from the transmitting antenna. For this test, a small dipole antenna was used as a receive antenna. For a fixed transmitting antenna input power, the received power from the dipole antenna was measured for each of twelve positions spaced over a plane representing the area occupied by a typical television receiver under test. The photograph of Figure 2 shows the field uniformity test configuration with the dipole antenna vertically polarized at one of the twelve test locations.

Several trial iterations of this test were performed as the anechoic RF absorptive material was repositioned along the perimeter of the test range to produce improved uniformity performance. Further, it was determined during this iterative process that performance was further improved at the UHF test frequencies by adding four additional blocks of material on the ground plane as shown in the photograph of Figure 2. This anechoic material on the ground plane was removed for the tests performed at the VHF test frequencies. After the iterative trials were completed, a final field uniformity of ± 3.5 dB, or better, was achieved at all six test frequencies for both vertically and horizontally polarized incident fields.

Figure 2 – Field Uniformity Test Configuration

2.2 Absolute Field Strength Calibration

To evaluate the susceptibility of a television receiver to a TVBD radiated field it is necessary to know with certainty the field strength that is incident at the receiver. Therefore, for each test frequency and each polarity, the test range was calibrated to establish the correspondence between the interfering signal generator[1] output power and the incident field strength at the receiver.

Prior to performing the field strength calibration tests, the receiving dipole antenna factor was determined for each test frequency and the cable loss was measured so that at each test frequency the measured received power could be readily converted to a field strength. A tuned dipole (adjusted for each frequency) was positioned 3 meters from the transmitting antenna. The center of this receiving dipole was aligned with the horizontal and vertical center of the transmitting antenna. A block diagram of the field strength calibration test equipment configuration is contained in Figure 3 and a photograph showing the tuned dipole positioned above the turntable is shown in Figure 4.

With the interfering signal turned off, a field strength measurement verified the absence of any strong spurious or otherwise unidentified emissions in the frequency range under test.

The theoretical field strength, at a distance of three meters from the transmitting antenna for a radiated power of 100 mW EIRP, is 577 milliVolts per meter (mV/m).

[1] Agilent MXG Vector Signal Generator AT/N5182A/506;O S/N MY46240087 calibrated 5/9/2008

Figure 3 – Field Strength Calibration Test Setup Diagram[2/3]

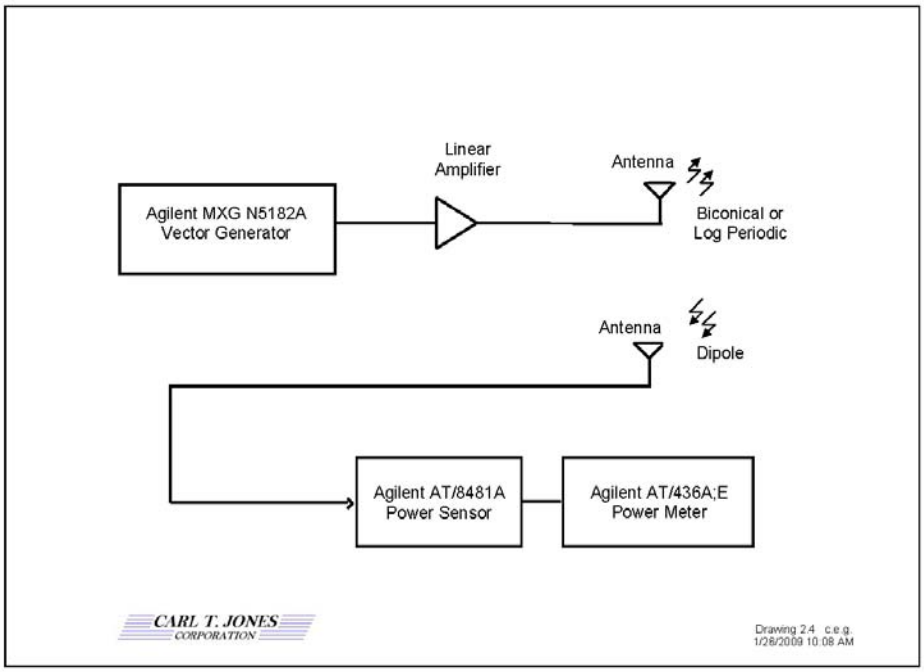

Figure 4 – Tuned Dipole above Turntable

For each test frequency and for each polarity, the vector signal generator ("VSG") was adjusted to produce a measured received power corresponding to an incident field strength of 577 mV/m. The output power of the vector signal generator was then recorded. This procedure provided the necessary correspondence between the interfering signal generator output power and the incident field at the receiver. In performing this

[2] Agilent Power Meter AT/436A;E S/N 2732A20136 calibrated 9/9/2008
[3] Power Sensor AT/8481A S/N 3318A83689 calibrated 9/18/2008

procedure, any ambiguity in incident field strength associated with ground reflections is removed.

2.3 The Simulated TVBD Interfering Signal

The simulated TVBD interfering signal was generated by an Agilent Vector Signal Generator ("VSG"). The VSG is capable of generating a band-limited Gaussian white noise signal having spectral characteristics that are the same as those of a TVBD signal. A spectral plot of the simulated TVBD signal is shown in Figure 5.

Figure 5 – Spectral Plot of Simulated TVBD Interfering Signal

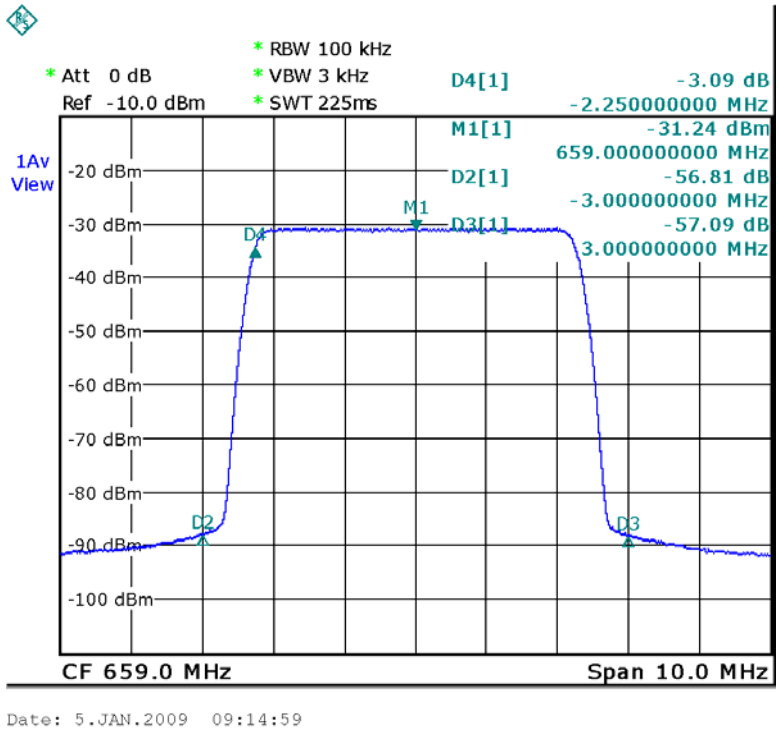

For each test frequency, the generator was adjusted for the frequency corresponding to the center of the selected 6 MHz broadcast channel. The 3 dB bandwidth of the interfering signal was then adjusted for approximately 4.5 MHz and the attenuation at the 6 MHz band edges was verified to be 55 dB or greater below the carrier level as shown in Figure 5.

Figure 6 shows a block diagram of the test equipment setup. In order to achieve the required radiated power level, the output of the VSG was amplified using an Amplifier Research, Model 5W1000, 5 Watt, linear power amplifier. The amplifier output was then fed through a coaxial switch and low-loss coaxial cable to an A.H. Systems Inc. Biconical Antenna, Model SAS-542 for TV Channel 5 (79 MHz), and to an Electro-Metrics, Model LPA-25, log periodic transmitting antenna for all other test channels. The coaxial switch provided the test engineer with the ability to

redirect the amplified signal through an attenuator to a spectrum analyzer[4] to verify the frequency and spectral mask of the amplified interfering signal prior to each test.

Figure 6 – Test Equipment Setup Diagram

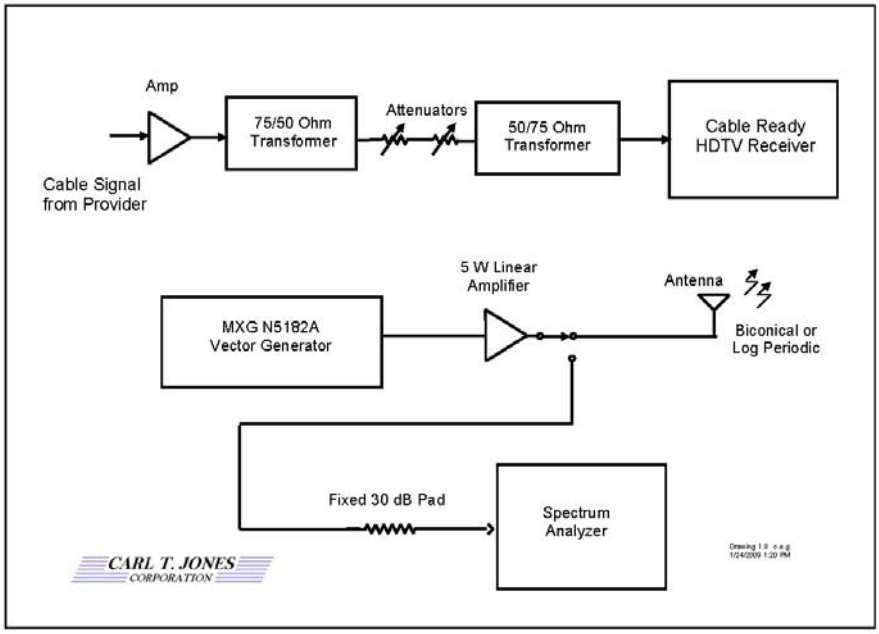

2.4 Desired Cable Signal Level

Cox Cable provided a cable drop to the test room. A standard fixed gain cable amplifier in combination with two variable step attenuators were used to achieve the desired signal level for each test channel.

The Digital Cable Network Interface Standard, ANSI/SCTE 40 2004, specifies a minimum signal level at the television receiver input of -12 dBmV for a 256 QAM digital signal and 0 dBmV (visual carrier) for an analog signal. All digital and analog susceptibility tests were performed with the minimum signal level present at the input to the receiver.

2.5 Test Channels

Test channels were selected to evaluate DPU interference susceptibility for both analog signal TV reception and digital signal reception since both types are commonly used by today's Cable TV service providers. Although analog signal reception deteriorates much more gracefully than does digital signal reception, in each case there is a DPU interference threshold at which interference artifacts appear in the received picture. With digital signals there is also a point, not far from the first appearance of artifacts, where the picture freezes or a blue screen appears.

[4] Rohde & Schwarz Spectrum Analyzer R&S/FSL3;A S/N 100359 calibrated 6/11/2008

After reviewing the Cox Cable channel plan, six cable channels were selected for testing. Both analog and 256 QAM digital channels were selected. In the VHF band, EIA cable channel 12 was selected for testing analog reception and EIA cable channels 5 and 13 were selected for testing interference susceptibility for 256 QAM digital reception. In the UHF band, it was determined that there were no "clear" (unencrypted) QAM channels available in the 512 MHz to 606 MHz and 614 MHz to 698 MHz bands where PPD's are permitted to operate. Since no "clear" QAM channels were available, the closest QAM channel to the desired UHF band was selected. This test channel was EIA cable channel 36 (294 MHz to 300 MHz). EIA cable channels 72 and 101 were selected for testing analog reception in the UHF band. The table below summarizes the desired and interfering signal channels and frequencies.

Table 1 - Test Channels and Interfering Signals

Desired Cable Signal			Undesired Interfering Signal	
EIA/NCTA Channel Designation	Modulation Type	Frequency (MHz)	Broadcast Channel	Center Frequency (MHz)
5	256 QAM	76 - 82	5	79
12	Analog	204 - 210	12	207
13	256 QAM	210 - 216	13	213
36	256 QAM	294 - 300	N/A	297
72	Analog	510 - 516	21	515
101	Analog	654 - 660	45	659

Both broadcast channels 20 and 21 overlap the spectrum occupied by cable channel 72; and both broadcast channels 44 and 45 overlap the spectrum occupied by cable channel 101. A preliminary test determined that in both cases, the interference occurred at a lower interfering signal level when present in the upper overlapping broadcast channel.[5] Therefore broadcast channels 21 and 45 were selected for DPU susceptibility testing.

2.6 Test Receivers

A total of seven television receivers were tested. Five of the receivers were manufactured in 2008 and therefore were equipped with digital tuners. Among these five were some listed by major retail outlets as

[5] For an interfering signal bandwidth of 4.5 MHz, the interfering signal from the lower overlapping broadcast channel overlaps the lower 1.25 MHz of the desired cable channel while the interfering signal from the upper overlapping broadcast channel overlaps the upper 3.25 MHz of the cable channel.

top-selling receivers. Two receivers were legacy receivers equipped with analog tuners only. One legacy receiver was manufactured in 2004 while the second was manufactured in 2006. A description of the test receivers is contained in the Table below.

Table 2 – Test Receiver Description

Television #	Tuner Type	Screen Size (Inches)	Date of Manufacture
1	Digital/Analog	22	2008
2	Digital/Analog	26	2008
3	Digital/Analog	32	2008
4	Digital/Analog	32	2008
5	Digital/Analog	19	2008
6	Analog Only	26	2004
7	Analog Only	24	2006

2.7 Test Procedure

Figure 7 shows a sketch of the test setup and equipment placement. The test receiver was placed on the turntable facing the interfering signal transmitting antenna. The receiver height was then adjusted using non-metallic spacers until the center of the receiver was at a height of 129 cm above the floor (the same height as the interfering signal transmitting antenna). The cable input signal attenuators were set for the selected test channel. Then, the input cable was connected to the receiver, and the receiver was tuned to the first test channel. The picture was viewed to ensure that the picture was unimpaired.

The interfering signal generator (VSG) was then turned on at an output power level that was well below the level corresponding to a radiated power of 100 mW EIRP. The transmitting antenna was oriented to be vertically polarized. While viewing the picture, the interfering signal generator output was slowly increased until just perceptible interference was visible in the picture. In the case of a digital signal, this was the level at which digital artifacts, such as tiling, were present in the picture. The output level of the VSG was then recorded.

Figure 7 – Test Setup and Equipment Placement Sketch

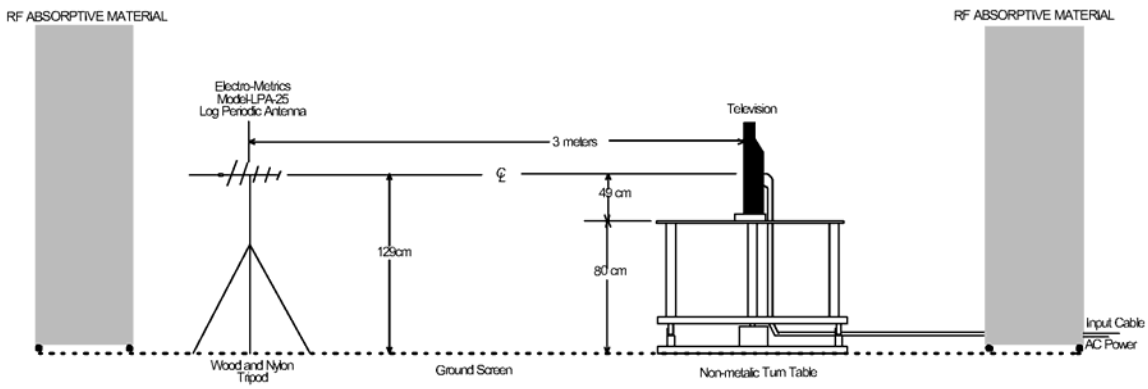

In the case of a 256 QAM digital picture, the output of the VSG interfering signal generator was increased further, in 0.1 dB steps, until picture "freeze" occurred or a blue screen appeared. The generator output level required to produce total picture reception failure was then recorded.

This procedure was repeated three additional times for counterclockwise rotation of the receiver to 90, 180 and 270 degree orientations with respect to the transmitting antenna. The entire procedure was then repeated for horizontal polarization of the transmitting antenna. Once all four orientations were tested for both transmitting antenna polarizations, the entire procedure was repeated for each of the remaining test channels.

3.0 Test Results

The results of the tests performed to evaluate receiver susceptibility to TVBD DPU interference are presented in this report in terms of the incident field strength required to cause just perceptible interference to the received picture. In addition, the corresponding radiated power level is presented, for the test distance of 3 meters, to allow direct comparison to maximum authorized radiated power levels of 100 mW for PPD devices and 4 watts (4,000 mW) for FD devices. Test results are presented for four orientations of the receiver under test and for both vertical and horizontal polarizations of the incident interfering signal.

Tests were performed at the Cox Cable facility in Springfield, Virginia to evaluate interference when the test receiver was tuned to both 256 QAM digital channels (EIA/NCTA Channels 5, 13, and 36) and to NTSC analog channels (EIA/NCTA Channels 12, 72, and 101). The TVDB DPU interference test results for the 256 QAM digital channels are contained in Section 3.1 and the test results for the NTSC analog channels are contained in Section 3.2.

3.1 TVBD DPU Interference to Digital Reception

Tables 3, 4, and 5 contain the test results for tests performed with each test receiver tuned to 256 QAM digital channels 5 (76-82 MHz), 13 (210 to

216 MHz), and 36 (294 to 300 MHz), respectively. Results are presented for the five test receivers that were equipped with digital tuners. With the test receiver tuned to a digital channel, just perceptible interference was defined for this test as the onset of intermittent tiling in the picture. The process of determining this onset threshold was to increase the interfering signal in 0.1 dB steps until intermittent tiling was observed and then reduce the signal strength 0.1 dB to insure that the intermittent tiling was eliminated. After determining the just perceptible interference threshold or tiling onset threshold, the interfering signal level was increased in 0.1 dB increments until either a picture freeze or blue screen condition was observed. On average the picture freeze or blue screen condition occurred with an interfering signal level 1 dB greater than the intermittent tiling onset level.

Table 6 provides a summary of the maximum susceptibility of each receiver for each of the three 256 QAM digital test channels and for each polarity of the incident interfering signal. The maximum susceptibility of the receiver under test is defined as the lowest interfering signal level required for just perceptible interference (tiling onset) to occur in the received picture[6].

A review of the data in Table 6 indicates that there is a wide performance range for the five test receivers. The maximum susceptibility performance ranges from 100 mV/m (receiver #4, channel 13, vertical polarization) to 3,170 mV/m (receiver #1, channel 5, vertical polarization). This range of field strengths corresponds to a radiated power range (for the 3 meter test distance) of 3.01 mW EIRP to 3,020 mW EIRP.

Table 7 provides a summary of the average susceptibility of each receiver for each of the three digital test channels and each polarity of the incident interfering signal. The average susceptibility was calculated for each receiver by averaging the just perceptible (tiling onset) field strength values for all four receiver orientations. Average susceptibility performance ranges from 169.8 mV/m (receiver #4, channel 13, vertical polarization) to 3,413 mV/m (receiver #1, channel 5, vertical polarization). This range of field strengths corresponds to a radiated power range (for the 3 meter test distance) of 8.7 mW EIRP to 3,499 mW EIRP.

With the exception of receiver #1 for test channel 5, the receivers were more susceptible to a vertically polarized interfering signal than a horizontally polarized interfering signal. Based on the average susceptibility data contained in Table 7, the receivers exhibited an approximate 5 dB worse performance when the interfering signal was vertically polarized than when it was horizontally polarized. This difference in performance is observed to decrease with increasing frequency, ranging from 6 dB for test channel 5 to 4.5 dB for test channel 36.

[6] It is important to note that the maximum susceptibility levels contained in Table 6 are based on only four discrete receiver orientations. It is likely that tests performed at all receiver orientations would result in lower maximum susceptibility levels.

Tables 8 and 9 present the data from Tables 6 and 7 in terms of the best, median, and worst performing receivers[7]. Based on the data contained in Table 8, the maximum susceptibility of the median receiver ranges from 249 mV/m (test channel 5, vertical polarization) to 968.7 mV/m (test channel 5, horizontal polarization). The maximum receiver susceptibility field strength range corresponds to a radiated power range of 18.62 mW EIRP to 281.9 mW EIRP.

The average susceptibility of the median receiver (Table 9) ranges from 288.9 mV/m (test channel 5, vertical polarization) to 1846.9 mV/m (test channel 36, horizontal polarization), corresponding to a radiated power range of 25.1 mW EIRP to 1024.33 mW EIRP.

3.2 TVDB DPU Interference to Analog Reception

Tables 10, 11 and 12 contain the receiver susceptibility test results for tests performed with each test receiver tuned to analog cable channels 12 (204 to 210 MHz), 72 (510-516 MHz), and 101 (654 to 660 MHz), respectively. Broadcast channels 20 and 21 each overlap a portion of the 6 MHz cable channel 72 spectrum. Broadcast channels 44 and 45 each overlap a portion of the 6 MHz cable channel 101 spectrum. As stated earlier, a preliminary test determined that interference occurred at a lower interfering signal level when the interfering signal was present in the upper overlapping broadcast channel. Therefore, tests were performed for interfering signals centered in broadcast channels 21 and 45. Cable channel 12 and broadcast channel 12 occupy the same 6 MHz spectrum so the interfering signal for the channel 12 tests is centered in the cable channel spectrum.

Results are presented for seven test receivers; five receivers equipped with digital tuners plus two legacy receivers equipped with analog-only tuners. The two legacy receivers are designated as receiver #'s 6 and 7.

The process of determining the just perceptible interference threshold was as follows. With the test receiver tuned to the first analog cable channel, the VSG was turned on at a level well below that corresponding to a radiated power level of 100 mW EIRP. The interfering signal level was then slowly increased in 1 dB steps until just perceptible interference was observed in the picture.

Table 13 provides a summary of the maximum susceptibility of each receiver for each of the three analog test channels and for each polarity of the incident interfering signal. As was the case for interference to digital reception, there is a wide range of susceptibility performance for analog reception among the seven test receivers.

[7] It should be emphasized that only a small test sample of five receivers is represented by this data.

From Table 13, the maximum susceptibility performance for analog reception ranges from 21 mV/m (receiver #7, channel 12, vertical polarization) to 2,085 mV/m (receiver #1, channel 72, horizontal polarization). This range of field strengths corresponds to a radiated power range (at the 3 meter test distance) of 0.13 mW EIRP to 1,306 mW EIRP. It is also noted that 27 of the 42 susceptibility entries (64%) in Table 13 correspond to equivalent radiated power levels less than 10 mW and 7 of the 42 entries (17%) correspond to radiated power levels of less than 1 mW EIRP.

Table 14 provides a summary of the average susceptibility of each receiver for each of the three analog test channels and each polarity of the incident interfering signal. Average susceptibility performance ranges from 51 mV/m (receiver #7, channel 12, vertical polarization) to 3,654 mV/m (receiver #1, channel 72, horizontal polarization). This range of field strengths corresponds to a radiated power range (at the 3 meter test distance) of 0.79 mW EIRP to 4,011 mW EIRP

All seven receivers were more susceptible to a vertically polarized interfering signal than a horizontally polarized signal when tuned to cable channel 12 by an average 6.4 dB (similar to the difference in performance for the digital reception susceptibility tests). However, there was, on average, essentially no difference in susceptibility performance between vertically and horizontally polarized interfering signals when the receivers were tuned to UHF channels 72 and 101.

Tables 15 and 16 present the data from Tables 13 and 14 in terms of the best, median, and worst performing receivers. Based on the data contained in Table 15, the <u>maximum</u> susceptibility of the median receiver ranges from 74.6 mV/m (test channel 12, vertical polarization) to 208.5 mV/m (test channel 72, horizontal polarization). The maximum receiver susceptibility field strength range corresponds to a radiated power range of 1.67 mW EIRP to 13.06 mW EIRP.

The <u>average</u> susceptibility of the median receiver (Table 16) ranges from 156.5 mV/m (test channel 12, vertical polarization) to 778 mV/m (test channel 72, horizontal polarization). This corresponds to a radiated power range of 7.36 mW EIRP to 181.8 mW EIRP.

3.3 <u>Estimate of TVBD Interference to Digital Reception in UHF Band</u>

After reviewing the Cox Cable channel plan, it was determined that there were no “clear” (unencrypted) QAM channels available for testing in the 512 MHz to 606 MHz and 614 MHz to 698 MHz bands where PPD’s are permitted to operate. Therefore, no receiver susceptibility measurements were possible for digital reception in this frequency band.

However, if one accepts that DPU ingress into the receiver is not dependent on the type of modulation of the desired channel but rather the shielding effectiveness of the receiver, then the difference between the

analog and digital interference thresholds for a given channel and interfering signal type is only a factor of the desired to undesired ("D/U") signal ratio required to cause interference for the two different desired signal modulation types.

Comparison of the average susceptibility data for tests performed on adjacent channels 12 and 13 could provide an estimate of the difference between analog and digital D/U ratios required to cause just perceptible interference. The resultant D/U factor could then be applied to the analog susceptibility data for channels 72 and 101 to estimate the receiver susceptibility on these channels for digital reception. Although this procedure is not a substitute for measured performance, it may provide some insight into the susceptibility performance of the test receivers at UHF frequencies when the receivers are tuned to a 256 QAM digital signal.

From the data contained in Tables 7 and 14, it was determined that the average susceptibility for a receiver tuned to a 256 QAM digital signal on channel 13 is 8.4 dB better than the average susceptibility of a receiver tuned to an analog signal on channel 12, when the interfering signal is vertically polarized, and 7.5 dB better when the interfering signal is horizontally polarized. This suggests that an approximate 8 dB difference exists in the D/U ratio required for just perceptible interference when comparing analog to 256 QAM digital reception. If this same 8 dB factor is applied to the analog average susceptibility data for channels 72 and 101 contained in Table 13, then a rough estimate of the receiver susceptibility for digital reception can be calculated.

Table 17 provides the <u>estimated</u> maximum receiver susceptibility for 256 QAM digital reception on channels 72 and 101, based the procedures discussed above. Only data associated with the five test receivers equipped with digital tuners are included in Table 17.

From Table 17, the <u>estimated</u> maximum susceptibility performance for 256 QAM digital reception ranges from 94.9 mV/m (receiver #2, channel 101, vertical polarization) to 5,238 mV/m (receiver #1, channel 72, horizontal polarization). This range of field strengths corresponds to a radiated power range (at the 3 meter test distance) of 2.7 mW EIRP to 8,241 mW EIRP.

Table 18 provides a summary of the <u>estimated</u> average susceptibility of each receiver for 256 QAM digital reception. Estimated average susceptibility performance ranges from 222.8 mV/m (receiver #2, channel 101, vertical polarization) to 9,178.8 mV/m (receiver #1, channel 72, horizontal polarization). This range of field strengths corresponds to a radiated power range (at the 3 meter test distance) of 14.9 mW EIRP to 25,305.58 mW EIRP.

Tables 19 and 20 present the data from Tables 17 and 18 in terms of the best, median, and worst performing receivers. Based on the data contained in Table 19, the <u>estimated</u> maximum susceptibility of the median receiver for 256 QAM digital reception ranges from 212.4 mV/m (test

channel 101, vertical polarization) to 830.2 mV/m (test channel 72, horizontal polarization). This range of field strengths, corresponds to a radiated power range of 13.55 mW EIRP to 207.02 mW EIRP at the 3 meter test distance.

The estimated average susceptibility of the median receiver for 256 QAM digital reception (Table 20) ranges from 438.6 mV/m (test channel 101, vertical polarization) to 2,094 mV/m (test channel 72, horizontal polarization), corresponding to a radiated power range of 57.78 mW EIRP to 1317.05 mW EIRP.

Table 3

Receiver Susceptibility Results for Cable Channel 5

Field Strength and Equivalent EIRP*
Required to Produce Just Perceptible Interference on Cable Channel 5
From an Interfering Signal on Broadcast Channel 5**

		Vertical Polarization		Horizontal Polarization	
Television	Orientation	F.S. (mV/m)	Equiv. EIRP (mW)	F.S. (mV/m)	Equiv. EIRP (mW)
#1	0	3282.28	3235.94	2350.58	1659.59
	90	3682.78	4073.80	2023.84	1230.27
	180	3170.85	3019.95	2219.09	1479.11
	270	3517.03	3715.35	2219.09	1479.11
#2	0	263.74	20.89	1803.75	977.24
	90	248.99	18.62	1337.14	537.03
	180	254.79	19.50	968.67	281.84
	270	273.01	22.39	979.89	288.40
#3	0	639.99	123.03	2405.34	1737.80
	90	670.16	134.90	2350.58	1659.59
	180	590.44	104.71	2094.96	1318.26
	270	632.67	120.23	2405.34	1737.80
#4	0	168.34	8.51	1037.95	323.59
	90	166.41	8.32	726.40	158.49
	180	176.27	9.33	834.02	208.93
	270	191.06	10.96	701.74	147.91
#5	0	332.03	33.11	1535.24	707.95
	90	243.32	17.78	1191.72	426.58
	180	251.87	19.05	693.71	144.54
	270	328.23	32.36	670.16	134.90

** At the listed EIRP just perceptible interference was observed at the test distance of 3 meters.*

*** Interfering Signal Center Frequency = 79 MHz; Desired Cable Signal Input Level = -12 dBmV.*

CARL T. JONES CORPORATION

Table 4

Receiver Susceptibility Results for Cable Channel 13

Field Strength and Equivalent EIRP*
Required to Produce Just Perceptible Interference on Cable Channel 13
From an Interfering Signal on Broadcast Channel 13**

		Vertical Polarization		Horizontal Polarization	
Television	Orientation	F.S. (mV/m)	Equiv. EIRP (mW)	F.S. (mV/m)	Equiv. EIRP (mW)
#1	0	653.40	128.23	1390.52	580.76
	90	582.34	101.86	1117.32	374.97
	180	549.76	90.78	1211.09	440.55
	270	684.19	140.60	1197.23	430.53
#2	0	462.57	64.27	995.81	297.85
	90	467.92	65.77	593.17	105.68
	180	426.75	54.70	482.14	69.82
	270	467.92	65.77	493.37	73.11
#3	0	676.36	137.40	995.81	297.85
	90	398.27	47.64	857.38	220.80
	180	327.47	32.21	897.79	242.10
	270	668.61	134.28	1472.91	651.63
#4	0	169.89	8.67	547.24	89.95
	90	177.90	9.51	233.44	16.37
	180	114.86	3.96	196.42	11.59
	270	216.36	14.06	704.98	149.28
#5	0	281.95	23.88	621.12	115.88
	90	190.62	10.91	156.02	7.31
	180	182.04	9.95	493.37	73.11
	270	384.75	44.46	322.24	31.19

** At the listed EIRP just perceptible interference was observed at the test distance of 3 meters.*

*** Interfering Signal Center Frequency = 213 MHz; Desired Cable Signal Input Level = -12 dBmV.*

Table 5

Receiver Susceptibility Results for Cable Channel 36

Field Strength and Equivalent EIRP*
Required to Produce Just Perceptible Interference on Cable Channel 36
From an Interfering Signal on 297 MHz

		Vertical Polarization		Horizontal Polarization	
Television	Orientation	F.S. (mV/m)	Equiv. EIRP (mW)	F.S. (mV/m)	Equiv. EIRP (mW)
#1	0	854.43	219.28	1498.57	674.53
	90	1467.83	647.14	2141.29	1377.21
	180	1278.43	490.91	2544.93	1945.36
	270	779.25	182.39	2430.39	1774.19
#2	0	1519.41	693.43	3095.11	2877.40
	90	1338.68	538.27	2021.51	1227.44
	180	1308.21	514.04	1305.20	511.68
	270	1591.02	760.33	3896.51	4560.37
#3	0	1235.03	458.14	768.56	177.42
	90	788.27	186.64	4223.53	5357.97
	180	1003.87	302.69	1740.51	909.91
	270	958.68	276.06	654.15	128.53
#4	0	1063.35	339.63	1822.53	997.70
	90	815.97	199.99	1060.90	338.06
	180	663.25	132.13	1136.78	388.15
	270	448.41	60.39	339.37	34.59
#5	0	148.48	6.62	427.24	54.83
	90	232.64	16.26	288.85	25.06
	180	395.07	46.88	468.46	65.92
	270	270.19	21.93	355.37	37.93

** At the listed EIRP just perceptible interference was observed at the test distance of 3 meters.*

*** Interfering Signal Center Frequency = 297 MHz, Desired Cable Signal Input Level = -12 dBmV*

Table 6

Summary of Maximum Susceptibility Results for Cable Channels 5, 13 & 36

Summary of Maximum Receiver Susceptibility
to TVBD DPU Interference
Desired Signal 256 QAM

Television	Desired Cable Signal	Undesired Broadcast Signal	Vertical Polarization		Horizontal Polarization	
			F.S. (mV/m)	Equiv. EIRP (mW)	F.S. (mV/m)	Equiv. EIRP (mW)
1	*5*	*5*	3170.0	3019.95	2023.8	1230.27
	13	*13*	549.8	90.78	1117.3	374.97
	36	*N/A***	779.3	182.39	1498.6	674.53
2	*5*	*5*	249.0	18.62	968.7	281.84
	13	*13*	426.8	54.70	482.1	69.82
	36	*N/A***	1308.2	514.04	1305.2	511.68
3	*5*	*5*	590.4	104.71	2095.0	1318.26
	13	*13*	327.5	32.21	857.4	220.80
	36	*N/A***	788.3	186.64	654.2	128.53
4	*5*	*5*	166.4	8.32	701.7	147.91
	13	*13*	100.0	3.01	196.4	11.59
	36	*N/A***	448.4	60.39	339.4	34.59
5	*5*	*5*	243.3	17.78	670.2	134.90
	13	*13*	182.0	9.95	156.0	7.31
	36	*N/A***	148.8	6.62	288.9	25.06

*** Interfering Signal Center Frequency = 297 MHz*

Table 7

Summary of Average Susceptibility Results for Cable Channels 5, 13 & 36

Summary of Average Receiver Susceptibility
to TVBD DPU Interference
Desired Signal 256 QAM

			Vertical Polarization		Horizontal Polarization	
Television	Desired Cable Signal	Undesired Broadcast Signal	F.S. (mV/m)	Equiv. EIRP (mW)	F.S. (mV/m)	Equiv. EIRP (mW)
1	*5*	*5*	3413.2	3499.3	2203.2	1457.9
	13	*13*	617.4	114.5	1229.0	453.7
	36	*N/A***	1095.0	360.1	2153.8	1393.3
2	*5*	*5*	260.1	20.3	1272.4	486.3
	13	*13*	456.3	62.5	641.1	123.5
	36	*N/A***	1439.3	622.3	2579.6	1998.7
3	*5*	*5*	633.3	120.5	2314.1	1608.4
	13	*13*	517.7	80.5	1056.0	334.9
	36	*N/A***	996.5	298.2	1846.7	1024.3
4	*5*	*5*	175.5	9.3	825.0	204.5
	13	*13*	169.8	8.7	420.5	53.1
	36	*N/A***	747.8	167.9	1089.9	356.8
5	*5*	*5*	288.9	25.1	1022.7	314.2
	13	*13*	259.8	20.3	398.2	47.6
	36	*N/A***	261.6	20.6	385.0	44.5

*** Interfering Signal Center Frequency = 297 MHz*

Table 8

Maximum Receiver Susceptibility to Interference for 256 QAM Digital Reception

	Vertical Polarization					
Channel	BEST RECEIVER		MEDIAN RECEIVER		WORST RECEIVER	
	F.S. (mV/m)	Equiv. EIRP (mW)	F.S. (mV/m)	Equiv. EIRP (mW)	F.S. (mV/m)	Equiv. EIRP (mW)
5	3170.0	3018.33	249.0	18.62	166.4	8.32
13	549.8	90.79	327.5	32.22	100.0	3.00
36	1308.2	514.04	779.3	182.41	148.8	6.65
	Horizontal Polarization					
5	2095.0	1318.31	968.7	281.86	670.2	134.91
13	1117.3	374.96	482.1	69.81	156.0	7.31
36	1498.6	674.56	654.2	128.55	288.9	25.07

Table 9

Average Receiver Susceptibility to Interference for 256 QAM Digital Reception

	Vertical Polarization					
Channel	BEST RECEIVER		MEDIAN RECEIVER		WORST RECEIVER	
	F.S. (mV/m)	Equiv. EIRP (mW)	F.S. (mV/m)	Equiv. EIRP (mW)	F.S. (mV/m)	Equiv. EIRP (mW)
5	3413.2	3499.22	288.9	25.07	175.5	9.25
13	617.4	114.49	456.3	62.54	169.8	8.66
36	1439.3	622.23	996.5	298.27	261.6	20.56
	Horizontal Polarization					
5	2314.1	1608.47	1272.4	486.29	825.0	204.44
13	1229.0	453.68	641.1	123.45	398.2	47.63
36	2579.6	1998.73	1846.7	1024.33	385.0	44.52

Table 10

Receiver Susceptibility Results for Cable Channel 12

Field Strength and Equivalent EIRP* Required to Produce Just Perceptible Interference on Cable Channel 12 From an Interfering Signal on Broadcast Channel 12**

		Vertical Polarization		Horizontal Polarization	
Television	Orientation	F.S. (mV/m)	Equiv. EIRP (mW)	F.S. (mV/m)	Equiv. EIRP (mW)
#1	0	373.83	41.98	458.33	63.10
	90	166.98	8.38	364.06	39.81
	180	74.59	1.67	514.25	79.43
	270	118.22	4.20	364.06	39.81
#2	0	210.22	13.27	647.40	125.89
	90	148.82	6.65	144.94	6.31
	180	118.22	4.20	289.19	25.12
	270	148.82	6.65	182.46	10.00
#3	0	235.87	16.71	514.25	79.43
	90	296.94	26.49	364.06	39.81
	180	235.87	16.71	514.25	79.43
	270	93.90	2.65	229.71	15.85
#4	0	333.18	33.34	514.25	79.43
	90	132.64	5.28	204.73	12.59
	180	74.59	1.67	229.71	15.85
	270	148.82	6.65	182.46	10.00
#5	0	105.36	3.33	81.50	2.00
	90	66.48	1.33	25.77	0.20
	180	37.38	0.42	289.19	25.12
	270	93.90	2.65	162.62	7.94
#6	0	118.22	4.20	324.47	31.62
	90	132.64	5.28	408.48	50.12
	180	118.22	4.20	257.74	19.95
	270	132.64	5.28	129.17	5.01
#7	0	21.02	0.13	289.19	25.12
	90	33.32	0.33	182.46	10.00
	180	66.48	1.33	144.94	6.31
	270	83.69	2.10	91.45	2.51

** At the listed EIRP just perceptible interference was observed at the test distance of 3 meters.*

*** Interfering Signal Center Frequency = 207 MHz, Desired Cable Signal Input Level = 0 dBmV*

CARL T. JONES CORPORATION

Table 11

Receiver Susceptibility Results for Cable Channel 72

Field Strength and Equivalent EIRP* Required to Produce Just Perceptible Interference on Cable Channel 72 From an Interfering Signal on Broadcast Channel 21**

		Vertical Polarization		Horizontal Polarization	
Televisio n	Orientation	F.S. (mV/m)	Equiv. EIRP (mW)	F.S. (mV/m)	Equiv. EIRP (mW)
#1	0	2726.94	2233.57	2945.61	2606.15
	90	5440.96	8892.01	3708.31	4130.48
	180	2166.09	1409.29	2085.33	1306.17
	270	768.56	177.42	5877.27	10375.28
#2	0	216.61	14.09	58.77	1.04
	90	86.23	2.23	83.02	2.07
	180	86.23	2.23	131.58	5.20
	270	108.56	3.54	104.51	3.28
#3	0	1930.53	1119.44	1476.30	654.64
	90	2430.39	1774.19	4160.79	5199.96
	180	1720.58	889.20	416.08	52.00
	270	2166.09	1409.29	2625.28	2070.14
#4	0	136.67	5.61	416.08	52.00
	90	216.61	14.09	233.98	16.44
	180	243.04	17.74	294.56	26.06
	270	153.35	7.06	147.63	6.55
#5	0	305.97	28.12	1656.44	824.14
	90	768.56	177.42	931.48	260.62
	180	136.67	5.61	416.08	52.00
	270	193.05	11.19	330.50	32.81
#6	0	108.56	3.54	131.58	5.20
	90	38.52	0.45	147.63	6.55
	180	48.49	0.71	73.99	1.64
	270	305.97	28.12	83.02	2.07
#7	0	684.98	140.93	659.44	130.62
	90	544.10	88.92	587.73	103.75
	180	343.30	35.40	1656.44	824.14
	270	385.19	44.57	208.53	13.06

* At the listed EIRP just perceptible interference was observed at the test distance of 3 meters.
** Interfering Signal Center Frequency = 515 MHz, Desired Cable Signal Input Level = 0 dBmV

Table 12

Receiver Susceptibility Results for Cable Channel 101

Field Strength and Equivalent EIRP* Required to Produce Just Perceptible Interference on Cable Channel 101 From an Interfering Signal on Broadcast Channel 45**

		Vertical Polarization		Horizontal Polarization	
Television	Orientation	F.S. (mV/m)	Equiv. EIRP (mW)	F.S. (mV/m)	Equiv. EIRP (mW)
#1	0	753.66	170.61	1524.67	698.23
	90	753.66	170.61	962.00	277.97
	180	377.73	42.85	681.05	139.32
	270	475.53	67.92	482.14	69.82
#2	0	94.88	2.70	171.07	8.79
	90	168.72	8.55	85.74	2.21
	180	53.36	0.86	60.70	1.11
	270	37.77	0.43	54.10	0.88
#3	0	671.70	135.52	482.14	69.82
	90	671.70	135.52	1524.67	698.23
	180	475.53	67.92	215.37	13.93
	270	845.62	214.78	341.33	34.99
#4	0	238.33	17.06	540.97	87.90
	90	134.02	5.40	85.74	2.21
	180	84.56	2.15	215.37	13.93
	270	168.72	8.55	304.21	27.80
#5	0	84.56	2.15	215.37	13.93
	90	212.41	13.55	152.47	6.98
	180	267.41	21.48	152.47	6.98
	270	134.02	5.40	135.89	5.55
#6	0	212.41	13.55	96.20	2.78
	90	212.41	13.55	171.07	8.79
	180	37.77	0.43	76.41	1.75
	270	753.66	170.61	121.11	4.41
#7	0	533.55	85.51	382.98	44.06
	90	336.65	34.04	241.64	17.54
	180	212.41	13.55	152.47	6.98
	270	475.53	67.92	341.33	34.99

** At the listed EIRP just perceptible interference was observed at the test distance of 3 meters.*

*** Interfering Signal Center Frequency = 659 MHz, Desired Cable Signal Input Level = 0 dBmV*

Table 13

Summary of Susceptibility Results for Cable Channels 12, 72, & 101

Summary of Maximum Receiver Susceptibility
to TVBD DPU Interference
Desired Signal NTSC Analog

			Vertical Polarization		Horizontal Polarization	
Television	Desired Cable Signal	Undesired Broadcast Signal	F.S. (mV/m)	Equiv. EIRP (mW)	F.S. (mV/m)	Equiv. EIRP (mW)
1	*12*	*12*	74.6	1.67	364.1	39.81
	72	*21*	768.6	177.42	2085.3	1306.16
	101	*45*	377.7	42.86	482.1	69.82
2	*12*	*12*	118.2	4.20	144.9	6.31
	72	*21*	86.2	2.23	58.8	1.04
	101	*45*	37.8	0.43	54.1	0.88
3	*12*	*12*	93.9	2.65	229.7	15.85
	72	*21*	1720.6	889.20	416.1	52.00
	101	*45*	475.5	67.92	215.4	13.93
4	*12*	*12*	74.6	1.67	182.5	10.00
	72	*21*	136.7	5.61	147.6	6.55
	101	*45*	84.6	2.15	85.7	2.21
5	*12*	*12*	37.3	0.42	25.8	0.20
	72	*21*	136.7	5.61	330.5	32.81
	101	*45*	84.6	2.15	135.9	5.55
6	*12*	*12*	118.2	4.20	129.2	5.01
	72	*21*	38.5	0.45	74.0	1.64
	101	*45*	37.8	0.43	76.4	1.75
7	*12*	*12*	21.0	0.13	91.5	2.51
	72	*21*	343.3	35.40	208.5	13.06
	101	*45*	212.4	13.55	152.5	6.98

** At the listed EIRP just perceptible interference was observed at the test distance of 3 meters.*

Table 14

Summary of Susceptibility Results for Cable Channels 12, 72, & 101

Summary of Average Receiver Susceptibility
to TVBD DPU Interference
Desired Signal NTSC Analog

Television	Desired Cable Signal	Undesired Broadcast Signal	Vertical Polarization		Horizontal Polarization	
			F.S. (mV/m)	Equiv. EIRP (mW)	F.S. (mV/m)	Equiv. EIRP (mW)
1	*12*	*12*	183.4	10.10	425.2	54.30
	72	*21*	2775.6	2314.06	3654.1	4010.66
	101	*45*	590.1	104.61	912.5	250.08
2	*12*	*12*	156.5	7.36	316.0	29.99
	72	*21*	124.4	4.65	94.5	2.68
	101	*45*	88.7	2.36	92.9	2.59
3	*12*	*12*	215.7	13.97	405.6	49.41
	72	*21*	2061.9	1276.98	2169.6	1413.88
	101	*45*	666.1	133.28	640.9	123.37
4	*12*	*12*	172.3	8.92	282.8	24.02
	72	*21*	187.4	10.55	273.1	22.40
	101	*45*	156.4	7.35	286.6	24.67
5	*12*	*12*	75.8	1.72	139.8	5.87
	72	*21*	351.1	37.02	833.6	208.73
	101	*45*	174.6	9.16	164.1	8.08
6	*12*	*12*	125.4	4.73	280.0	23.54
	72	*21*	125.4	4.72	109.1	3.57
	101	*45*	304.1	27.77	116.2	4.06
7	*12*	*12*	51.3	0.79	177.0	9.41
	72	*21*	489.4	71.94	778.0	181.82
	101	*45*	389.5	45.58	279.6	23.48

** At the listed EIRP just perceptible interference was observed at the test distance of 3 meters.*

Table 15

Maximum Receiver Susceptibility to Interference for Analog Reception

Channel	Vertical Polarization					
	BEST RECEIVER		MEDIAN RECEIVER		WORST RECEIVER	
	F.S. (mV/m)	Equiv. EIRP (mW)	F.S. (mV/m)	Equiv. EIRP (mW)	F.S. (mV/m)	Equiv. EIRP (mW)
12	118.2	4.20	74.6	1.67	21.0	0.13
72	1720.6	889.22	136.7	5.61	38.5	0.45
101	475.5	67.91	84.6	2.15	37.8	0.43
	Horizontal Polarization					
12	364.1	39.82	144.9	6.31	25.8	0.20
72	2085.3	1306.13	208.5	13.06	58.8	1.04
101	482.1	69.81	135.9	5.55	54.1	0.88

Table 16

Average Receiver Susceptibility to Interference for Analog Reception

Channel	Vertical Polarization					
	BEST RECEIVER		MEDIAN RECEIVER		WORST RECEIVER	
	F.S. (mV/m)	Equiv. EIRP (mW)	F.S. (mV/m)	Equiv. EIRP (mW)	F.S. (mV/m)	Equiv. EIRP (mW)
12	215.7	13.97	156.5	7.36	51.3	0.79
72	2775.6	2313.99	351.1	37.03	124.4	4.65
101	666.1	133.27	304.1	27.78	88.7	2.36
	Horizontal Polarization					
12	425.2	54.30	282.8	24.02	139.8	5.87
72	3654.1	4010.60	778.0	181.81	94.5	2.68
101	912.5	250.10	279.6	23.48	92.9	2.59

Table 17

Summary of <u>Estimated</u> Maximum Receiver Susceptibility
to TVBD DPU Interference
Desired Signal 256 QAM Digital

Television	Desired Cable Channel	Undesired Broadcast Channel	Vertical Polarization		Horizontal Polarization	
			F.S. (mV/m)	Equiv. EIRP (mW)	F.S. (mV/m)	Equiv. EIRP (mW)
1	*72*	*21*	1930.5	1119.45	5238.1	8241.34
	101	*45*	948.8	270.40	1211.1	440.55
2	*72*	*21*	216.6	14.09	147.6	6.55
	101	*45*	94.9	2.70	135.9	5.55
3	*72*	*21*	4321.9	5610.46	1045.1	328.10
	101	*45*	1194.5	428.55	541.0	87.91
4	*72*	*21*	343.3	35.40	370.8	41.30
	101	*45*	212.4	13.55	215.4	13.93
5	*72*	*21*	343.3	35.40	830.2	207.01
	101	*45*	212.4	13.55	341.3	35.00

** At the listed EIRP just perceptible interference was observed at the test distance of 3 meters.*

Table 18

Summary of <u>Estimated</u> Average Receiver Susceptibility
to TVBD DPU Interference
Desired Signal 256 QAM Digital

Television	Desired Cable Channel	Undesired Broadcast Channel	Vertical Polarization		Horizontal Polarization	
			F.S. (mV/m)	Equiv. EIRP (mW)	F.S. (mV/m)	Equiv. EIRP (mW)
1	*72*	*21*	6972.1	14600.73	9178.8	25305.58
	101	*45*	1482.4	660.02	2292.0	1577.89
2	*72*	*21*	312.5	29.33	237.3	16.91
	101	*45*	222.8	14.90	233.4	16.36
3	*72*	*21*	5179.3	8057.19	5449.8	8920.96
	101	*45*	1673.3	840.97	1609.8	778.40
4	*72*	*21*	470.8	66.57	685.9	141.31
	101	*45*	392.9	46.36	719.8	155.64
5	*72*	*21*	881.8	233.57	2094.0	1317.03
	101	*45*	438.6	57.77	412.1	51.00

** At the listed EIRP just perceptible interference was observed at the test distance of 3 meters.*

Table 19

Maximum Receiver Susceptibility to Interference for 256 QAM Digital Reception

Channel	Vertical Polarization					
	BEST RECEIVER		MEDIAN RECEIVER		WORST RECEIVER	
	F.S. (mV/m)	Equiv. EIRP (mW)	F.S. (mV/m)	Equiv. EIRP (mW)	F.S. (mV/m)	Equiv. EIRP (mW)
72	4321.9	5610.45	343.3	35.40	216.6	14.09
101	1194.5	428.57	212.4	13.55	94.9	2.71
	Horizontal Polarization					
72	5238.1	8241.30	830.2	207.02	147.6	6.54
101	1211.1	440.56	341.3	34.99	135.9	5.55

Table 20

Average Receiver Susceptibility to Interference for 256 QAM Digital Reception

Channel	Vertical Polarization					
	BEST RECEIVER		MEDIAN RECEIVER		WORST RECEIVER	
	F.S. (mV/m)	Equiv. EIRP (mW)	F.S. (mV/m)	Equiv. EIRP (mW)	F.S. (mV/m)	Equiv. EIRP (mW)
72	6972.1	14600.76	881.8	233.55	312.5	29.33
101	1673.3	841.00	438.6	57.78	222.8	14.91
	Horizontal Polarization					
72	9178.8	25305.81	2094.0	1317.05	237.3	16.91
101	2292.0	1577.89	719.8	155.62	233.4	16.36

APPENDIX III

CARL T. JONES
CORPORATION

Test Result Comparison Report
Television Band Devices Direct Pickup Interference
CATV drop cable ingress issue
December 2008 – January 2009

In December 2008 tests were conducted at the Cox Cable Maintenance facility in Springfield, VA, to evaluate the potential for direct pick-up (DPU) interference from a simulated White Space TV Band Device (TVBD) to a cable ready TV set connected to a standard CATV drop signal.

After evaluating the test results, questions arose due to a relatively high, uniform, interference vulnerability threshold to the digital signals. This led to further evaluation of the drop cable used to carry the CATV signal to the test turntable. Specifically, concerns about cable ingress interference were elevated.

The first series of tests in December utilized a brand new, high quality triple shielded RG-6 cable with factory installed threaded F connectors on each end to deliver the incoming cable signal to TV sets on the test turntable. Two comparison cables were available, provided by Cox Cable during the testing process. They were both quadruple shielded RG-6 CATV drop type cables with field installed PPC EXG 08 F style threaded connectors on either end.

Subjecting the terminated cables to a strong radiated TVBD like signal in a controlled setting immediately determined that the triple shielded RG-6 cable that had been used had a high level of unwanted signal ingress. Further evaluation determined

Carl T. Jones Corporation
7901 Yarnwood Court Springfield, Virginia 22153-2827 (703) 569-7704 Fax: (703) 569-7704

that the ingress did not appear to the result of a damaged or improperly installed connector.

Comparison testing of the two quadruple shielded cables with field installed F connectors found very little unwanted signal ingress.

Further testing on the test range at the Carl T. Jones facility was performed to estimate the likelihood of the inferior cable's ingress contamination of the data collected during the December DPU tests at the Cox facility. It was evident from these tests that the ingress had a significant and undesirable effect on the December testing data. The tests needed to be redone using a drop cable with little or no unwanted signal ingress.

In January 2009 the tests were redone, again at the Cox Cable Maintenance facility in Springfield, VA, using the same test setup and site arrangement previously used in the December testing. This second test program, however, was performed after extreme measures were taken and careful verification testing was accomplished to ensure minimal cable ingress. Additionally, frequent measurements were taken to examine signal ingress during the second round of testing to constantly verify there was little or no contamination of the results data.

Even with the quadruple shielded CATV drop cable, it was necessary to route the cable on the floor and under a ground plane and through some snap on type torroids to force the ingress interference to the site RF noise floor (measures that are probably unlikely in a typical cable viewer's home theater).

Tables 1 through 4, following, document the comparison of measurement data of the five cable ready TV sets equipped with digital tuners that were used in both tests on

the four TV channel frequencies common to both the December and January tests. Tables 1 and 4 contain interfering signal level comparisons for interference to an analog TV picture whereas Tables 2 and 3 contain data for interference to 256 QAM digital channels.

Reducing the unwanted interference signal ingress into the CATV drop cable in the second round of (January) testing made it so the analog signal reception of Channel 12, among the 5 TV test sets, could withstand an additional 13.5 dB of interfering signal RF before perceptible degradation of the received picture was noticed. This effect was much less noticeable on Analog channel 101 (EIA 45) were only about 2.5 dB more interfering signal was tolerated.

The effect upon digital channel reception was much more noticeable, however. As Tables 2 and 3 show, perceptible interference levels to the digital pictures withstood an additional 19-20 dB of unwanted interference radiation when ingress into the CATV drop cable was suppressed.

Even small amounts of unwanted signal cable ingress from nearby interference sources has a huge impact upon digital signal reception. To reiterate a point made earlier, extreme measures were taken and careful verification testing was accomplished to insure there was very little unwanted signal ingress onto the CATV drop cable was present during the second round of testing.

A couple of observations can be made with the above information that go beyond the scope of the testing done thus far:

Adding peripheral devices with cabling, such as digital video recorders, outboard cable set top boxes, surround sound audio systems, and signal source input selection switches are likely toraise ingress levels in the typical viewer's home. There is also a possibility that off the shelf, moderately priced, consumer type interconnecting CATV cables may have unacceptably high levels of signal ingress.

At the very least these tests show the need to carefully consider the impact of even low levels of unwanted signal ingress in the presence of nearby RF radiators to the performance of cable ready TV receivers.

Table 1

Comparison of EIRP Required to Produce
Just Perceptible Interference on Cable Channel 12
From an Interfering Signal on Broadcast Channel 12

Interfering Source with Unreliable Cable (Initial Test)
vs.
Interfering Source with Reliabe Cable (Retest)

		Vertical Polarization					Horizontal Polarization				
		Initial Test Equivalent EIRP		**Retest** Equivalent EIRP		*Ratio*	**Initial Test** Equivalent EIRP		**Retest** Equivalent EIRP		*Ratio*
Television	Orientation	(mW)	(dBm)	(mW)	(dBm)	*(dB)*	(mW)	(dBm)	(mW)	(dBm)	*(dB)*
# 1	0	0.59	-2.29	41.98	16.23	*18.52*	8.26	9.17	63.10	18.00	*8.83*
	90	0.83	-0.79	8.38	9.23	*10.02*	0.66	-1.83	39.81	16.00	*17.83*
	180	0.17	-7.79	1.67	2.23	*10.02*	8.26	9.17	79.43	19.00	*9.83*
	270	0.53	-2.79	4.20	6.23	*9.02*	1.31	1.17	39.81	16.00	*14.83*
# 2	0	0.83	-0.79	13.27	11.23	*12.02*	10.40	10.17	125.89	21.00	*10.83*
	90	1.66	2.21	6.65	8.23	*6.02*	0.83	-0.83	6.31	8.00	*8.83*
	180	0.26	-5.79	4.20	6.23	*12.02*	3.29	5.17	25.12	14.00	*8.83*
	270	2.64	4.21	6.65	8.23	*4.02*	0.83	-0.83	10.00	10.00	*10.83*
# 3	0	0.26	-5.79	16.71	12.23	*18.02*	2.61	4.17	79.43	19.00	*14.83*
	90	0.83	-0.79	26.49	14.23	*15.02*	0.83	-0.83	39.81	16.00	*16.83*
	180	0.07	-11.79	16.71	12.23	*24.02*	0.41	-3.83	79.43	19.00	*22.83*
	270	0.42	-3.79	2.65	4.23	*8.02*	0.33	-4.83	15.85	12.00	*16.83*
# 4	0	8.34	9.21	33.34	15.23	*6.02*	16.48	12.17	79.43	19.00	*6.83*
	90	1.66	2.21	5.28	7.23	*5.02*	0.26	-5.83	12.59	11.00	*16.83*
	180	0.13	-8.79	1.67	2.23	*11.02*	0.66	-1.83	15.85	12.00	*13.83*
	270	0.21	-6.79	6.65	8.23	*15.02*	1.31	1.17	10.00	10.00	*8.83*
# 5	0	0.26	-5.79	3.33	5.23	*11.02*	8.26	9.17	2.00	3.00	*-6.17*
	90	0.26	-5.79	1.33	1.23	*7.02*	1.65	2.17	0.20	-7.00	*-9.17*
	180	0.17	-7.79	0.42	-3.77	*4.02*	1.31	1.17	25.12	14.00	*12.83*
	270	0.33	-4.79	2.65	4.23	*9.02*	0.66	-1.83	7.94	9.00	*10.83*

Average of All Orientations	Vertical dB	Horizontal dB
Television # 1	11.90	12.83
Television # 2	8.52	9.83
Television # 3	16.27	17.83
Television # 4	9.27	11.58
Television # 5	7.77	2.08

Table 2

Comparison of EIRP Required to Produce
Just Perceptible Interference on Cable Channel 13
From an Interfering Signal on Broadcast Channel 13

Interfering Source with Unreliable Cable (Initial Test)
vs.
Interfering Source with Reliabe Cable (Retest)

		Vertical Polarization					Horizontal Polarization				
		Initial Test Equivalent EIRP		**Retest** Equivalent EIRP		*Ratio*	**Initial Test** Equivalent EIRP		**Retest** Equivalent EIRP		*Ratio*
Television	Orientation	(mW)	(dBm)	(mW)	(dBm)	*(dB)*	(mW)	(dBm)	(mW)	(dBm)	*(dB)*
# 1	0	6.14	7.88	128.23	21.08	*13.20*	83.18	19.20	580.76	27.64	*8.44*
	90	1.90	2.78	101.86	20.08	*17.30*	3.02	4.80	374.97	25.74	*20.94*
	180	0.39	-4.12	90.78	19.58	*23.70*	3.39	5.30	440.55	26.44	*21.14*
	270	1.14	0.58	140.60	21.48	*20.90*	2.45	3.90	430.53	26.34	*22.44*
# 2	0	0.79	-1.02	64.27	18.08	*19.10*	8.51	9.30	297.85	24.74	*15.44*
	90	0.89	-0.52	65.77	18.18	*18.70*	1.05	0.20	105.68	20.24	*20.04*
	180	0.29	-5.42	54.70	17.38	*22.80*	0.72	-1.40	69.82	18.44	*19.84*
	270	0.61	-2.12	65.77	18.18	*20.30*	0.27	-5.70	73.11	18.64	*24.34*
# 3	0	1.31	1.18	137.40	21.38	*20.20*	2.51	4.00	297.85	24.74	*20.74*
	90	2.13	3.28	47.64	16.78	*13.50*	1.58	2.00	220.80	23.44	*21.44*
	180	0.14	-8.62	32.21	15.08	*23.70*	0.63	-2.00	242.10	23.84	*25.84*
	270	0.52	-2.82	134.28	21.28	*24.10*	0.85	-0.70	651.63	28.14	*28.84*
# 4	0	0.64	-1.92	8.67	9.38	*11.30*	11.75	10.70	89.95	19.54	*8.84*
	90	1.37	1.38	9.51	9.78	*8.40*	0.54	-2.70	16.37	12.14	*14.84*
	180	0.16	-8.02	3.96	5.98	*14.00*	0.23	-6.40	11.59	10.64	*17.04*
	270	0.11	-9.62	14.06	11.48	*21.10*	0.35	-4.50	149.28	21.74	*26.24*
# 5	0	0.16	-7.92	23.88	13.78	*21.70*	4.07	6.10	115.88	20.64	*14.54*
	90	1.73	2.38	10.91	10.38	*8.00*	2.88	4.60	7.31	8.64	*4.04*
	180	1.37	1.38	9.95	9.98	*8.60*	1.62	2.10	73.11	18.64	*16.54*
	270	0.61	-2.12	44.46	16.48	*18.60*	0.95	-0.20	31.19	14.94	*15.14*

Average of All Orientations	Vertical dB	Horizontal dB
Television # 1	18.78	18.24
Television # 2	20.23	19.92
Television # 3	20.38	24.22
Television # 4	13.70	16.74
Television # 5	14.23	12.57

Table 3

Comparison of EIRP Required to Produce
Just Perceptible Interference on Cable Channel 36
From an Interfering Signal on 297 MHz

Interfering Source with Unreliable Cable (Initial Test)
vs.
Interfering Source with Reliabe Cable (Retest)

		Vertical Polarization					Horizontal Polarization				
		Initial Test Equivalent EIRP		**Retest** Equivalent EIRP		*Ratio*	**Initial Test** Equivalent EIRP		**Retest** Equivalent EIRP		*Ratio*
Television	Orientation	(mW)	(dBm)	(mW)	(dBm)	*(dB)*	(mW)	(dBm)	(mW)	(dBm)	*(dB)*
# 1	0	0.39	-4.11	219.28	23.41	*27.52*	6.75	8.29	674.53	28.29	*20.00*
	90	1.38	1.39	647.14	28.11	*26.72*	26.85	14.29	1377.21	31.39	*17.10*
	180	10.21	10.09	490.91	26.91	*16.82*	4.89	6.89	1945.36	32.89	*26.00*
	270	37.93	15.79	182.39	22.61	*6.82*	14.42	11.59	1774.19	32.49	*20.90*
# 2	0	3.62	5.59	693.43	28.41	*22.82*	4.26	6.29	2877.40	34.59	*28.30*
	90	8.30	9.19	538.27	27.31	*18.12*	15.10	11.79	1227.44	30.89	*19.10*
	180	2.45	3.89	514.04	27.11	*23.22*	4.56	6.59	511.68	27.09	*20.50*
	270	38.82	15.89	760.33	28.81	*12.92*	1.20	0.79	4560.37	36.59	*35.80*
# 3	0	4.26	6.29	458.14	26.61	*20.32*	2.04	3.09	177.42	22.49	*19.40*
	90	5.12	7.09	186.64	22.71	*15.62*	1.73	2.39	5357.97	37.29	*34.90*
	180	1.90	2.79	302.69	24.81	*22.02*	9.10	9.59	909.91	29.59	*20.00*
	270	4.36	6.39	276.06	24.41	*18.02*	0.55	-2.61	128.53	21.09	*23.70*
# 4	0	0.64	-1.91	339.63	25.31	*27.22*	0.51	-2.91	997.70	29.99	*32.90*
	90	3.16	4.99	199.99	23.01	*18.02*	5.87	7.69	338.06	25.29	*17.60*
	180	0.17	-7.81	132.13	21.21	*29.02*	1.02	0.09	388.15	25.89	*25.80*
	270	0.13	-9.01	60.39	17.81	*26.82*	0.10	-9.81	34.59	15.39	*25.20*
# 5	0	0.74	-1.31	6.62	8.21	*9.52*	0.67	-1.71	54.83	17.39	*19.10*
	90	0.76	-1.21	16.26	12.11	*13.32*	0.55	-2.61	25.06	13.99	*16.60*
	180	4.78	6.79	46.88	16.71	*9.92*	1.77	2.49	65.92	18.19	*15.70*
	270	4.16	6.19	21.93	13.41	*7.22*	1.77	2.49	37.93	15.79	*13.30*

Average of All Orientations	Vertical dB	Horizontal dB
Television # 1	19.47	21.00
Television # 2	19.27	25.93
Television # 3	19.00	24.50
Television # 4	25.27	25.38
Television # 5	10.00	16.18

Table 4

Comparison of EIRP Required to Produce
Just Perceptible Interference on Cable Channel 101
From an Interfering Signal on Broadcast Channel 45

Interfering Source with Unreliable Cable (Initial Test)
vs.
Interfering Source with Reliabe Cable (Retest)

		Vertical Polarization					Horizontal Polarization				
		Initial Test Equivalent EIRP		**Retest** Equivalent EIRP		*Ratio*	**Initial Test** Equivalent EIRP		**Retest** Equivalent EIRP		*Ratio*
Television	Orientation	(mW)	(dBm)	(mW)	(dBm)	*(dB)*	(mW)	(dBm)	(mW)	(dBm)	*(dB)*
# 1	0	13.18	11.20	170.61	22.32	*11.12*	35.48	15.50	698.23	28.44	*12.94*
	90	15.49	11.90	170.61	22.32	*10.42*	5.62	7.50	277.97	24.44	*16.94*
	180	21.88	13.40	42.85	16.32	*2.92*	28.18	14.50	139.32	21.44	*6.94*
	270	19.50	12.90	67.92	18.32	*5.42*	11.22	10.50	69.82	18.44	*7.94*
# 2	0	3.09	4.90	2.70	4.32	*-0.58*	28.18	14.50	8.79	9.44	*-5.06*
	90	1.55	1.90	8.55	9.32	*7.42*	2.82	4.50	2.21	3.44	*-1.06*
	180	0.78	-1.10	0.86	-0.68	*0.42*	5.62	7.50	1.11	0.44	*-7.06*
	270	4.90	6.90	0.43	-3.68	*-10.58*	0.45	-3.50	0.88	-0.56	*2.94*
# 3	0	30.90	14.90	135.52	21.32	*6.42*	223.87	23.50	69.82	18.44	*-5.06*
	90	77.62	18.90	135.52	21.32	*2.42*	2.82	4.50	698.23	28.44	*23.94*
	180	12.30	10.90	67.92	18.32	*7.42*	8.91	9.50	13.93	11.44	*1.94*
	270	61.66	17.90	214.78	23.32	*5.42*	177.83	22.50	34.99	15.44	*-7.06*
# 4	0	19.50	12.90	17.06	12.32	*-0.58*	8.91	9.50	87.90	19.44	*9.94*
	90	19.50	12.90	5.40	7.32	*-5.58*	5.62	7.50	2.21	3.44	*-4.06*
	180	0.98	-0.10	2.15	3.32	*3.42*	2.24	3.50	13.93	11.44	*7.94*
	270	1.95	2.90	8.55	9.32	*6.42*	14.13	11.50	27.80	14.44	*2.94*
# 5	0	9.77	9.90	2.15	3.32	*-6.58*	7.08	8.50	13.93	11.44	*2.94*
	90	12.30	10.90	13.55	11.32	*0.42*	5.62	7.50	6.98	8.44	*0.94*
	180	48.98	16.90	21.48	13.32	*-3.58*	141.25	21.50	6.98	8.44	*-13.06*
	270	61.66	17.90	5.40	7.32	*-10.58*	14.13	11.50	5.55	7.44	*-4.06*

Average of All Orientations	Vertical dB	Horizontal dB
Television # 1	7.47	11.19
Television # 2	-0.83	-2.56
Television # 3	5.42	3.44
Television # 4	0.92	4.19
Television # 5	-5.08	-3.31

APPENDIX IV

FIELD TESTS ASSESSING THE ADEQUACY OF THE NEW WHITE SPACES RULES WITH RESPECT TO AVOIDING CO-CHANNEL INTERFERENCE WITH CABLE SYSTEM HEADEND RECEPTION

David Large, Consultant

March 16, 2009

SUMMARY

Measurements were made on a typical suburban cable television headend to ascertain the adequacy of the newly-adopted rules with respect to protection of cable system reception from co-channel operation of white spaces devices of various types. The results show that, for a rural headend, the "keyhole" shaped protection area defined in the current rules is valid for portable devices, but only if the width of the main-beam area and the diameter of the sidelobe area are increased appropriately. For fixed devices, however, a circular area of about 80 km radius is required to avoid interference.

INTRODUCTION

On November 14, 2008 the FCC released its Report and Order setting forth rules for the operations of "white spaces" devices in television channels which will be vacated with the cessation of analog over-air television programming.[1] Among other provisions, cable television systems operators who receive over-air television programming at headends that are located beyond the protected contours of digital television (DTV) stations may register those headends with national database operators. Upon registration, two defined areas (one for co-channel and one for adjacent channel operation) around each headend for each received channel will be entered into the national database of available channels for white spaces devices so that devices which consult that database will not operate within the protected areas.

On December 28-30, a team from the Carl T. Jones Corporation (CTJ) and I made a series of tests on the Cox headend in Fredericksburg, VA to make field measurements with the intent of assessing the adequacy of the co-channel protection provisions. This report is a summary and analyses of those tests.

METHODOLOGY

First we identified a cable headend and an over-air DTV station which was receivable, but not in use, at that headend (so that our tests would not affect reception by its customers) and for which the headend was beyond the protected contour boundary. We also selected a second channel near the first (the second upper adjacent) which was unoccupied.

Then the CTJ mobile equipment van was moved to several selected locations at various azimuths and distances from the headend receiving location. From each test location it

[1] Second Report and Order and Memorandum Opinion and Order, 08-260A1, Federal Communications Commission

was used to briefly transmit a signal at a calibrated EIRP towards the headend antenna. The signal was modulated by band-limited noise so as to occupy essentially the entire bandwidth of the selected television channel, with negligible energy falling outside that channel.

With the signal radiating on the DTV station's channel, the test signal amplitude was slowly raised until the threshold of visibility (TOV) of interference was detected on a television receiver in the headend. Then, without changing the level, the test signal was moved up two channels to a vacant over-air frequency, and the relative levels of the desired DTV signal and the test signal were measured in the headend and recorded. This gave us a direct measure of D/U at TOV.

Finally, a direct measurement was made of the level of the DTV station's signal where the antenna feedline entered the headend facility.

The first order of analysis was to calculate the azimuth of the headend receiving antenna, based on the latitude and longitude of the DTV station and the headend. Then, using the latitude and longitude of each test van location, the distance from the headend and azimuth from the headend to the test van, relative to the antenna, was calculated.

Then, using the distance from the headend to each test location and the transmitted EIRP at TOV from that location, we calculated the test signal field strength at the headend, assuming free-space, line-of-sight transmission.

We next used the antenna manufacturer's published data on its gain as a function of azimuth, combined with the measured D/U, to calculate the DTV stations' field strength at the receiving antenna. We also used the DTV stations' level, as measured on the antenna feedline, to calculate its signal strength at the antenna, taking into account feedline loss, passive component loss, and advertised antenna gain. These results were compared with the DTV signal strength implied by the TOV measurements.

Finally, to determine the protection area required by a typical rural headend, our results were scaled:

- By the amount by which the DTV station's signal strength exceeded the level used by the FCC to define its protected contour (41 dBu).
- By the difference between the TOV D/U and 23 dB, which allows a reasonable operational fade margin.
- By the difference between the gain as a function of azimuth of the specific headend receiving antenna versus a generic antenna with assumed uniform sidelobe suppression.

Finally, the typical distance over which line-of-sight transmission can be assumed was calculated for both fixed and portable devices, and the protection radii limited to those distances.

The normalized data was then used to predict distances over which portable (100 mW EIRP), fixed (4 W EIRP), and spectrum-sensing-only (50 mW EIRP) devices would cause interference to a rural headend, as a function of azimuth. These are then compared with the protection offered in the newly-adopted rules.

Although adjacent channel tests were not performed, the results can also be scaled to show the protection radii required for protection from such transmissions, using common expectations of adjacent channel rejection by receiving equipment.

TEST RESULTS SUMMARY

The detailed test data from various test points is contained in Appendix IV. The following table summarizes the most important results, while Figure 1 shows the locations graphically.

Test Point	Distance to HE (km)	Azimuth w.r.t. HE antenna	EIRP at TOV (dBW)	Test Signal Field at HE (dBu)	Relative antenna gain (dB)	D/U at TOV	Implied DTV signal
1	3.03	136.0	*		<-35		
2	1.64	-98.7	*		-31		
3	0.98	-59.2	+4.7	79.9	-35	17.7	65.6
4	0.28	-9.6	-35.2	50.7	-1	16.5	66.2
5	0.09	-156.6	-17.2	79.1	-32	15.5	62.6
6	2.41	-32.4	-7.3	60.1	-11	16.4	65.5
7	2.95	-15.6	-2.8[#]	62.8	-2	17.1	77.9

Notes:

*the test signal was undetectable at the headend, even when increased to +6 dBW. We were unable to verify line-of-sight from these locations and suspect that the path was blocked.

[#] We were not able to verify line-of-sight from this location; the path may have been partially blocked

Figure 1: Test Point Locations (HE @0,0)

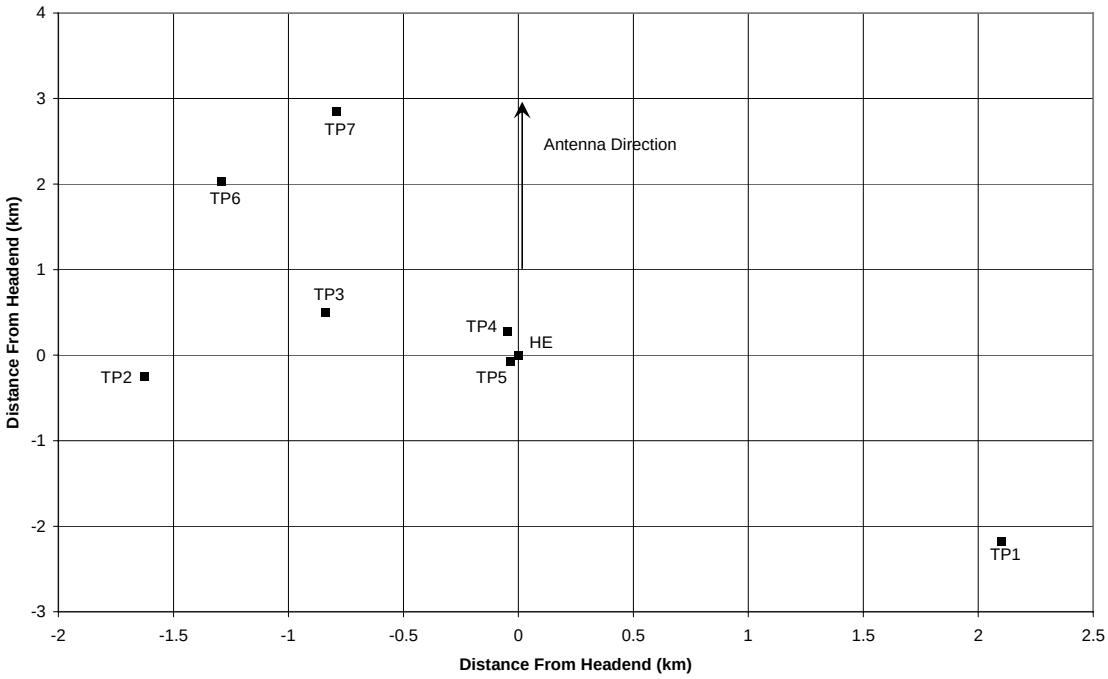

Additionally, as noted, the level of WCVW was measured at the antenna downlead. When the field strength is calculated backwards from that point (including estimated passive losses and antenna gain), the field strength was calculated to be 70.5 dBu. It was noted, however, that the level of the DTV signal varied over a considerable range (at least 6 dB) through the period of our tests, so that the apparent 4.3 dB difference between the average of the implied levels for TP3-TP6 (64.2 dBu) and the level calculated from the downlead signal may be partially due to the difference in time between the measurements.

DISCUSSION OF TEST RESULTS

The implied signal strength of the DTV signal, as calculated from the TOV D/U ratio, antenna gain, and calculated test signal field strength was remarkably consistent for test points 3 through 6, where there appeared to be a clear line-of-sight to the receiving antenna (visually verified for TP 4 and TP5).[2] Furthermore, the DTV signal strength calculated on the basis of interference thresholds is within a few decibels of that independently calculated using directly-measured download signal level from the station. Taken together, these two results verify the use of free-space path loss assumptions between the test van and receiving antenna as a means of predicting interference thresholds where line-of-sight conditions exist.

[2] This is particularly true given some uncertainty as to whether the antenna was exactly pointed at the DTV station (the two antennas pointed nominally towards Richmond differed in azimuth by a few degrees). An error in azimuth would affect the location of sidelobe response nulls.

Since the TOV interference threshold depends primarily on the ratio of signal strengths of the desired and interfering signals (which is well established by this and other tests at approximately 15 dB[3]), the results should be linearly scalable to different levels of DTV signals and to receiving antennas with different characteristics, and scalable using free-space transmission loss to different distances between white spaces devices and the headend, so long as a line-of-sight transmission path exists.

SCALING FACTORS

In order to predict the required area within which white spaces device operation must be forbidden to prevent interference to headend reception, we need to discuss several scaling factors that need to be applied to our raw results.

DTV Signal Strength

The calculated field strength of the DTV signal, averaging the test data and the downlead signal data was 67.4 dBu. This is 26.4 dB higher than the 41dBu used by the FCC to determine protected contours for DTV stations. While Cox was able to carefully situate their headend and antenna to get a higher signal level, Fredericksburg is distinctively not a rural headend, being located just outside the protected contour of the station. We believe it is likely that rural headends are likely utilize signals whose strength in the vicinity of their antennas will be similar to the protected contour level of 41 dBu. Thus, in calculating required separation between white spaces devices of various power levels and headends, the field strength required to cause TOV interference must be reduced by 26.4 dB relative to our results.

Suppression of Signals Received Outside the Receiving Antenna's Main Beamwidth

We were fortunate in that the manufacturer's specified characteristics of the receiving antenna were known, as they allowed us to compensate for the approximate drop off in response as a function of azimuth from the headend to various test locations. Different antennas and antenna arrays, however, will have different beamwidths, front-to-back suppressions, sidelobe suppressions, and sidelobe patterns.

In drafting rules to protect headends, however, there are only two logical approaches: either calculate the sensitivity (and thus required protection distance) as a function of azimuth for each antenna at each headend or, alternately, assume that all headend receiving antennas meet some reasonable standard for suppression of signals arriving outside the main beam thus define a protected area outside the main beam that is independent of azimuth.

---

[3] Although our test results average D/U ratio at TOV is slightly higher (16.5 dB), it must be remembered that 15 dB is the generally-determined threshold for unimpaired DTV signals, whereas our measurements in the field are for interference to a signal that is already impaired to some degree by such factors as thermal noise, multipath, potential co-channel and adjacent channel interference (both adjacent channels are occupied), and other factors.

The current rules, by adopting a uniform protection radius within which white space device operation is forbidden, imply that a uniform approach is desired. Given that most headend antenna configuration are specified to achieve 25 dB or greater suppression of signals received from outside the main beam, we scaled our results accordingly.

Antenna Beamwidth

The newly adopted rules adopt a protected area that extends ±30 degrees from the line between the headend and DTV station, within which the protection radius is much greater (80 km) than for signals transmitted from greater relative azimuths (8 km).[4] Aside from the question of what protection radii are appropriate for signals received from within the antenna beamwidth versus signals which are suppressed by an assumed rear and/or sidelobe amount, there is a question of the appropriate beamwidth assumption. Specifically, if the protection radius for signals outside the main beamwidth is based on an assumption of some specific sidelobe suppression, then the beamwidth assumption must extend to azimuths for which the signal is suppressed by that amount.

To illustrate, consider the response of the antenna in use in Fredericksburg (datasheet attached to this document). Its stated horizontal beamwidth is 46 (= ± 23) degrees. From the antenna pattern given, it appears that its response is down by about 5 dB at those azimuths. At the ±30-degree azimuths specified in the newly adopted rules, the response is only down about 10 dB. If the protection radius outside the main beamwidth is predicated on 25 dB sidelobe suppression, then the central protection zone must be extended to ± 50 degrees to reach that degree of suppression. If that is not done, signals transmitted at azimuths of between ±30 and ±50 degrees may be as much as 15 dB too strong to avoid interference. Thus, in our scaled results, we will assume a ±50 degree main beam protection zone to avoid the only alternative, which is to increase the protection radius outside the main beam.

Appropriate Signal Protection Ratios

Testing to threshold of visibility has a different meaning when applied to analog, as opposed to digital, signals. Depending on the nature of the interfering signal, the TOV for an analog signal may occur at 40 to 50 dB D/U, or even lower. Stronger interfering signal, however, do not result in loss of reception, but rather a gradually deteriorating signal which will still be viewable down to about 30 dB D/U.

By contrast, the difference in D/U between TOV for a digital signal and complete loss of reception is typically 1 dB or less. It is for this reason that digital stations are protected from each other to achieve 23 dB of protection ratios – it allows an 8 dB fade margin before destructive interference occurs. The same considerations are appropriate for headends. Interference to reception there may affect thousands of subscribers, and thus at least the same protection ratio is appropriate for that situation. For that reason we used TOV as an easily-determined data point for our tests, but scaled the final results by 8 dB – that is the maximum tolerable signal strength from a white spaces transmitter is based

[4] C.F.R 47 §15.712(b)

on being received at the headend equipment at a level no greater than 23 dB lower than the DTV station's signal.

Line-of-Sight Limitations

Finally, while it is appropriate to assume free-space transmission loss where a line-of-sight exists between a white spaces transmitter and a headend antenna, that relationship will not exist where the combination of white spaces transmitting antenna height and headend receiving antenna height (above average terrain), does not provide that signal path. While specific, actual transmission paths may be greater or less than those calculated based on earth curvature and antenna heights, we have calculated that distance as a compromise maximum required protection distance.

Using the test data and these scaling factors, in the analyses which follow, we have calculated the required protection radii as a function of azimuth and signal levels, but limited the distance to the average line-of-sight. In the line-of-sight calculations, we have assumed that portable device antennae will be 2 meters above ground level, while fixed device antennae will be 10 meters above ground level. We have assumed a typical rural headend antenna mounting height of 152 meters (500'), resulting in calculated line-of-sight distances of about 70 km for portable devices and 79 km for fixed devices.

COMPARISON OF CURRENT AND REQUIRED PROTECTION ZONES

Figure 2 shows the co-channel protection provided registered headends under the current rules.

Figure 3 shows the required protection area required to protect a typical rural headend (as defined above) from transmissions emanating from a 100 mW EIRP portable device. As can be seen, the "keyhole" approach used in the current rules is applicable, so long as the protection radius towards the DTV station is extended to the line-of-sight boundary, the width of the "wedge" is increased to ± 50 degrees, and the radius of the protection area outside the main beam is increased to 13 km.

Figure 4 shows the required protection area required to protect the same headend from transmissions emanating from a 4 W EIRP fixed device. Such devices, if operated within ± 50 degrees of the azimuth direction of the receiving antenna will cause interference at any distance for which line-of-sight transmission conditions exist. For azimuths for which the antenna response is reduced by the assumed 25 dB side/rear rejection, such devices must be forbidden from operating within 80 km of the headend.

Figure 5 shows the areas that would have to be protected to avoid interference from a 50 mW white spaces device. As can be seen, this area is identical to that required to protect against emissions from a 100 mW device, except that the required protection radius outside the main beam can be reduced from 13 km to 9 km. In the main beam, the required protection distance is still limited only by distance over which free-space transmission conditions exist. In fact, at a typical 80 km line-of-sight limit, a device with

power as low as -19 dBW (12.6 mW) will generate sufficient field strength at the receiving antenna to be just 23 dB below a 41 dBu desired signal.

Although no quantitative data was taken, an informal test verified that no useful “cone-of-silence” exists directly under the receiving antenna. With the van parked close to the tower and to the rear of the antenna, less than 1 mW EIRP was required to cause destructive interference to reception. The short transmission distance, and thus low field attenuation, more than compensates for antenna vertical sidelobe rejection.

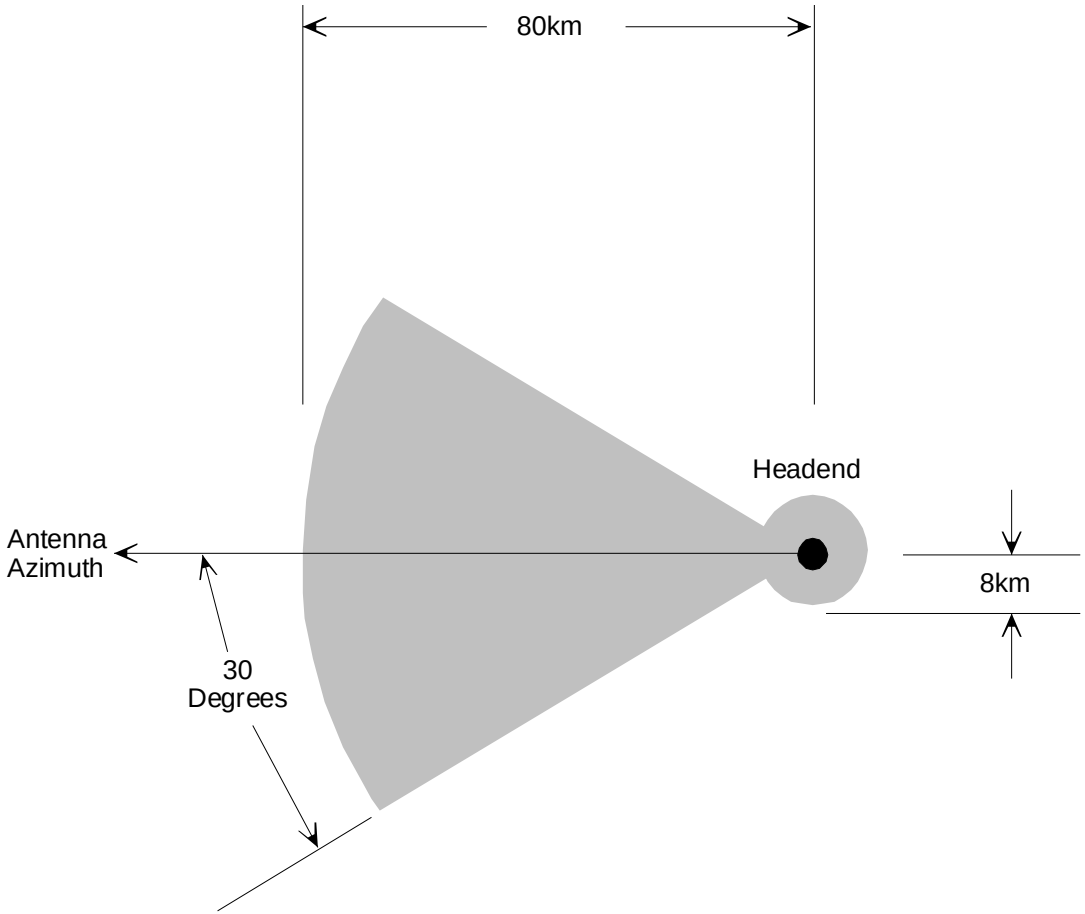

Figure 2: FCC-Specified Headend Protection Areas

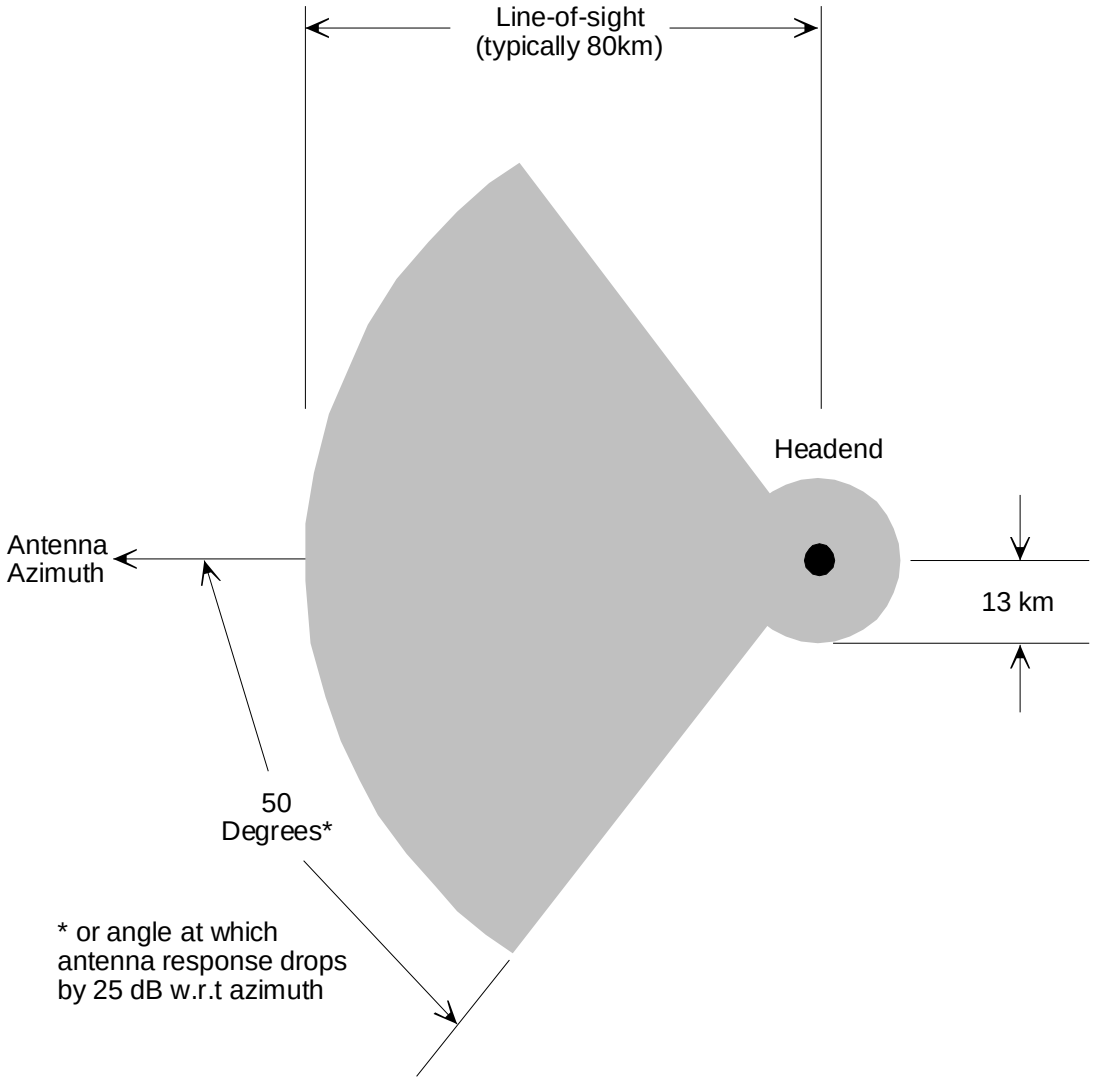

Figure 3: Area Required to Protect Against Portable Device Transmissions

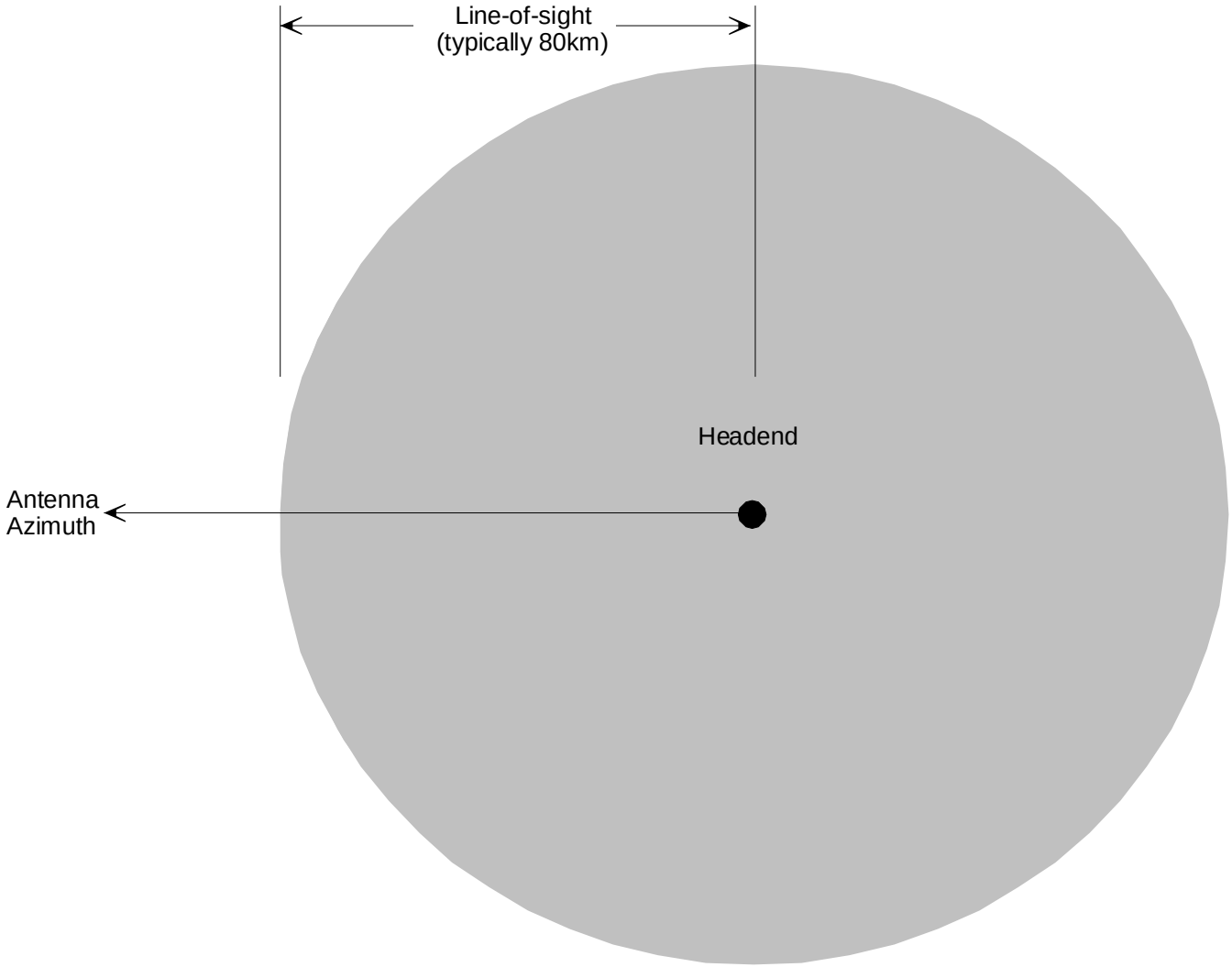

Figure 4: Area Required to Protect Against Fixed Device Transmissions

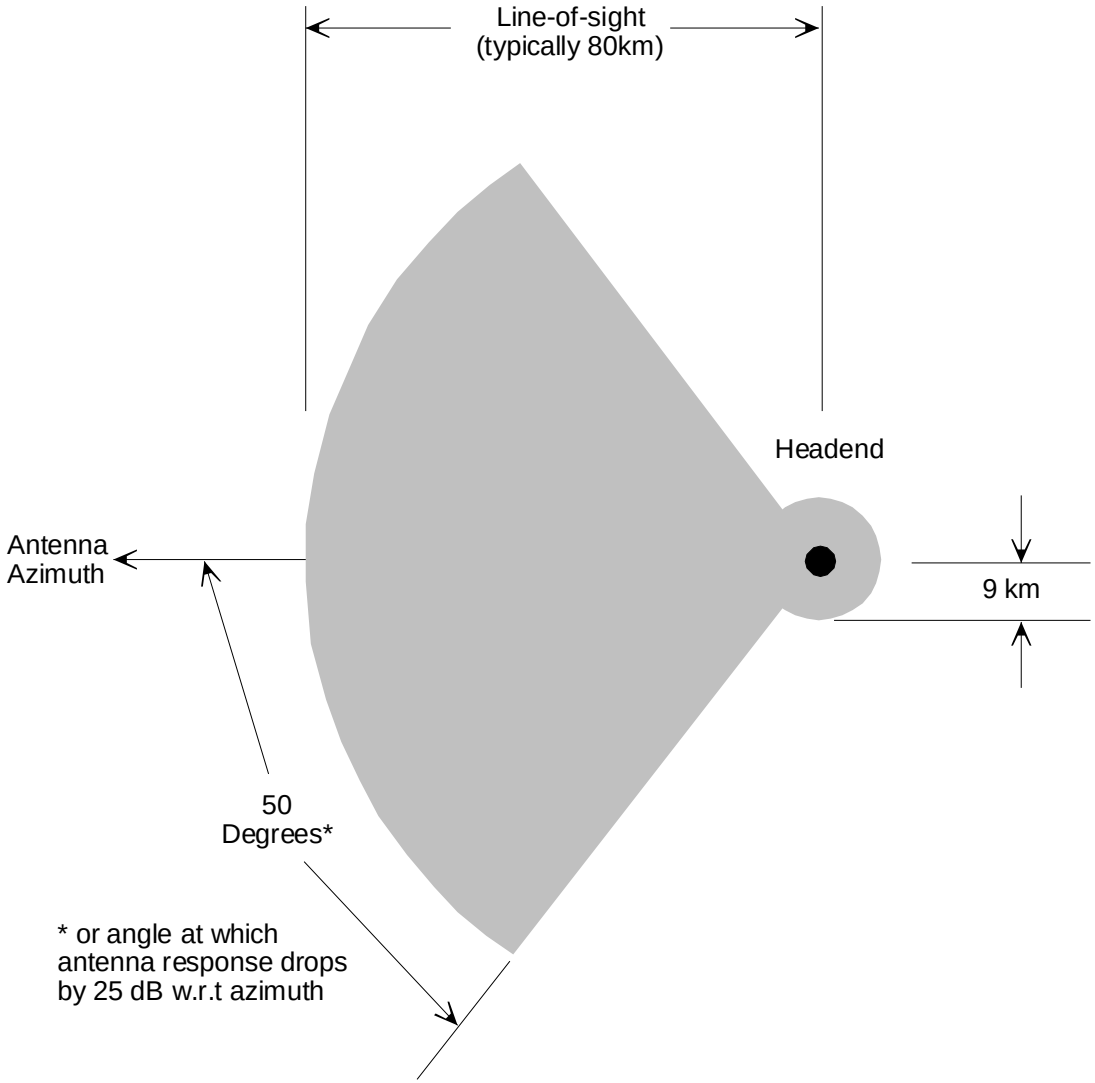

Figure 5: Area Required to Protect Against 50 mW Device Transmissions

APPENDIX I: DTV STATION

The off-air DTV station chosen for our tests was WCVW, Richmond, VA. Its technical data is as follows:

DTV Channel: 44 (653 MHz center frequency, 650.31 MHz pilot frequency)

Location:

North latitude:	37º 30’ 45” (37.513º)
West longitude:	77º 36’ 5” (77.601º)

Transmit power:

Current license:	100 kW EIRP
Granted CP:	112 kW EIRP

As can be seen on the FCC map attached to this report, the coverage area for Channel 44, at its newly authorized power level still falls short of Fredericksburg. Scaling roughly from the map, it appears that the radius of the coverage area is approximately 82 km, while the distance between the station’s tower and the Fredericksburg headend is just over 90 km.

APPENDIX II: HEADEND RECEPTION CONFIGURATION FOR WCVW TESTS

The headend chosen for our tests is operated by Cox Communications and located at 138 Brickert Street, Fredericksburg, more specifically their tower is at North Latitude 38º 18.848', West Longitude 77º 26.096'.

The antenna used to receive WCVW is a Wade Antenna Ltd., model WL 30-83/S single-bay log-periodic design covering UHF television channels 30 through 83 and whose data sheet is attached to this report.

The antenna is mounted approximately 120' above ground level. The feedline is estimated to be 170' long and is constructed of half-inch "flexi" cable whose loss characteristics were represented to us by Cox' technician as comparable to 500P3 hardline cable. In the normal configuration, the feedline feeds a 2:1 splitter where it enters the headend building and, from there, two Size 59 cables (Commscope type HEC59) feed a pair of Tandberg RX8320 DTV receivers. Channel 44's signal, however, is not utilized. There is no amplification in the signal path.

For purposes of our tests, Cox installed a second splitter between the feedline and the normal splitter to create a test point. This was used initially to measure the signal strength of channel 44, using both a Sunrise Telecom Model AT2000RQ QAM Analyzer and an HP8591C spectrum analyzer. After it was determined that a usable signal was present, a Size 59 cable was installed from the test point to a work area where a second 2:1 splitter was used to feed a Magnovox consumer-quality DTV converter (and from its output, a baseband video cable to a Panasonic flat-screen analog television receiver) off one leg and off the other leg the QAM analyzer. The headend configuration is shown in Figure 6. In the tests, the DTV and television receiver were used to make subjective determination of TOV, while the QAM analyzer was used to measure the relative levels of the DTV signal and test signal once TOV-level interference was detected.

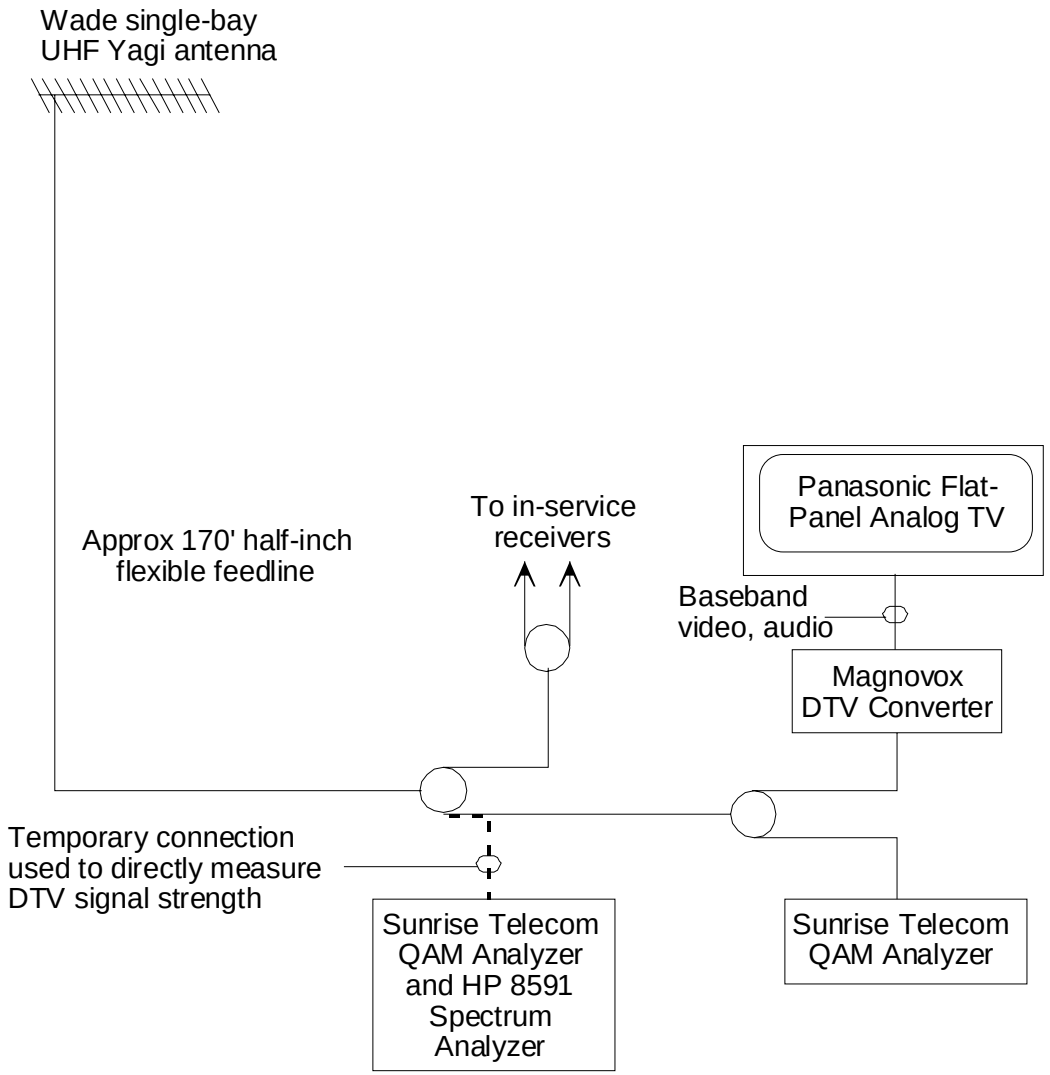

Figure 6: Headend Test Configuration

Based on the locations of WCVW's transmitting tower and the headend receiving tower, if the receiving antenna is accurately pointed towards the transmitter, its azimuth is 189.34º, while the path length is 56.05 miles = 90.20 km.

<u>Calculated Signal Strength Based On Antenna Downlead Measured Level</u>

The level of channel 44's pilot as measured at the output of a 2-way splitter connected to the antenna downlead in the headend was: -22.0 dBmV on both the QAM analyzer and spectrum analyzer.
To which we must add 11.3 dB
for the difference between pilot level and total power in

the DTV channel, which is:	-10.7 dBmV
To which we add the assumed splitter loss of	4.0 dB
To get the feedline output level of	- 6.7 dBmV
The feedline consists of approximately 170' of .500" flexible cable which the Cox technician told us has a loss equivalent to .500" P3 cable, or approximately 2 dB/100' so that the total feedline loss is approximately	3.4 dB
Adding this, we get the level at the terminals of the antenna	- 3.3 dBmV
The antenna is Wade model WL 30-83/S single-bay log-periodic antenna with a forward gain of	8.9 dBd (11 dBi)
(The datasheet for the antenna is attached to this report)	
So that the level, had it been received via a dipole would have been approximately	-12.2 dBmV

The formula used to calculate field strength from dipole signal level is:

Field strength (µV/m) = 21*f*10^(S/20) [in Excel notation]

Where: f is the freq in MHz
S = signal level from a dipole in dBmV

Using this formula, -12.2 dBmV corresponds to an external

653 MHz field strength of	3,366 µV/m
=	+70.5 dBµV/m

By comparison, if the path loss between DTV station and headend were governed by free-space attenuation alone, we can calculate the field strength using:

E(dBµV/m) = 105+Pt+G-20log(d)

Where: Pt is transmitting antenna input power in dBkW
G is the antenna gain in dBi
d is the distance in km
Pt + G = EIRP

Using 112 kW EIRP = 20.5 dBkW EIRP (equal to the sum of Pt and G in the above equation) and 90.2 km distance (from Appendix II), we calculate that the free-space field strength at the headend would be +86.4 dBu. Thus the measured level, while it exceeds the protected contour level of +41 dBu by 29.5 dB, is still 15.9 dB below the free-space level.

APPENDIX III: TEST VAN CONFIGURATION AND CALIBRATION

Details of the test van configuration and its calibration are included in the report from C.T. Jones. Basically, however, the test van configuration included a test signal generator that was internally modulated by band-limited noise and connected to a power amplifier. The output of the amplifier was connected to a coaxial switch, whose output legs could be connected to a spectrum analyzer, a power meter, or through a feedline of approximately 40' length to a Winegard UHF consumer-grade television antenna mounted on a rotating, telescoping 30' mast. The basic configuration is shown in Figure 7.

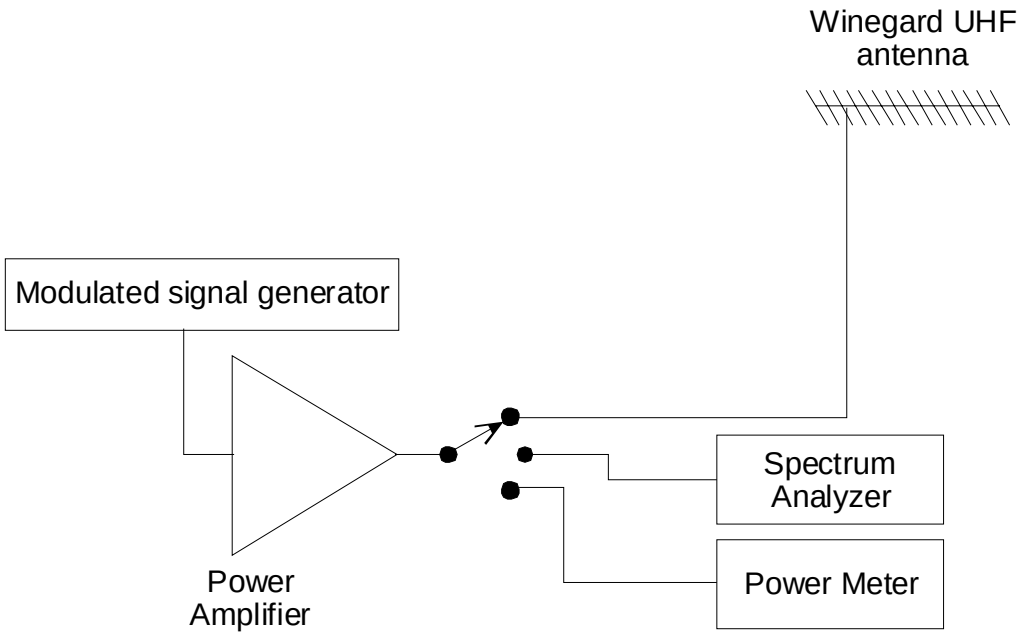

Figure 7: Test Van Configuration

Additionally, a test dipole was available for use in calibrating the antenna and measuring the flatness of the modulated signal in operation.

The calibration procedure entailed the following steps:

- The test generator was connected to the amplifier input and the amplifier output to the spectrum analyzer through a 30 dB attenuator to protect the analyzer's input circuits.

- With the level set well below the amplifier's compression point, the noise-like modulation was adjusted so that the spectrum was flat and occupied nearly the entire TV channel, with steep skirts on each side.

- With the amplifier alternately connected to the power meter and analyzer, the usable amplifier output power range was determined and calibrated using the power meter, while the onset of compression was noted by a broadening of the modulation skirts, as observed on the analyzer.

- The loss of the antenna feed cable was then calibrated by inserting it between the amplifier and power meter and measuring the difference in level.

- Finally the antenna was calibrated by first measuring the pilot carrier level of several off-air TV stations (both analog and digital), including channels 43, 44, and 45. A reference dipole was then substituted for the off-air antenna (with its length adjusted for each channel in turn) with the difference representing the antenna's gain in dBd.

- Combining these measurements CJT then calculated the fixed difference in dB between the generator's output in dBm and the external radiated power in dBW EIRP.

The dipole was subsequently used to observe the final radiated signal on the spectrum analyzer to ensure that the modulation was flat, with acceptable skirts.

Appendix IV: Raw and Normalized Field Test Data: Fredericksburg, VA Headend Interference Tests

Off-air reception

	North Latitude			West Longitude		
	deg	min	sec	deg	min	sec
Headend	38	18.848	0	77	26.096	0
Station	37.513	0	0	77.601	0	0

Receive antenna azimuth (deg)	Receive path length (mi)	(km)	Elavation AMSL (ft)
189.3389	56.05	90.202	200

Test point locations

Calculated position information

	North Latitude			West Longitude			Azimuth from HE (deg)	Azimuth wrt HE antenna (deg)	Distance from headend (mi)	(km)	
TP1	38	20.192	0	77	27.281	0	325.3348	135.9959	1.8806	3.0264	278
TP2	38	18.838	0	77	24.966	0	90.64039	-98.69852	1.0204	1.6421	280
TP3	38	18.508	0	77	25.583	0	130.1839	-59.15498	0.6064	0.9758	263
TP4	38	18.694	0	77	26.095	0	179.7079	-9.631033	0.1772	0.2852	239
TP5	38	18.887	0	77	26.064	0	32.77296	-156.566	0.0534	0.0859	245
TP6	38	17.652	0	77	25.447	0	156.931	-32.40788	1.4959	2.4074	140
TP7	38	17.264	0	77	25.876	0	173.7785	-15.5604	1.8336	2.9509	136

Measured and Normalized Data

Generator Level to TOV (dBm)	Radiated Level EIRP (dBW)	Free-space Calculated Field at HE (dBu)	Relative antenna gain to test sig dB	Test Signal Channel 46 Xmt EIRP (dbW)	Test Signal Channel 46 Relative Level (dBm)	DTV Ch 44 relative level (dBm)	Corrected Ch 44 relative level (dBm)#	D/U at TOV (dB)	Implied ch44 field at HE (dBu)
			<-35	6	*				
			-31	6	*				
-9.7	4.7	79.9	-35	4.7	-64.9	-49.4	-47.2	17.7	62.6
-49.6	-35.2	50.7	-1	-35.2	-62.7	-48.4	-46.2	16.5	66.2
-31.6	-17.2	79.1	-32	-17.2	-61.1	-47.8	-45.6	15.5	62.6
-21.7	-7.3	60.1	-11	-7.3	-57.9	-43.7	-41.5	16.4	65.5
-17.2	-2.8	62.8	-2	-2.8	-62.4	-47.5	-45.3	17.1	77.9

notes:

* signal not detectable at headend

\# Corrected for QAM analyzer error when measuring DTV signal strength in wideband mode

Attachments:

PDF datasheet for Fredericksburg UHF receiving antenna

PDF of predicted coverage areas for selected Richmond DTV stations, downloaded from http://www.fcc.gov/dtv/markets/maps_report1/Richmond-Petersburg_VA.pdf

WADE ANTENNA

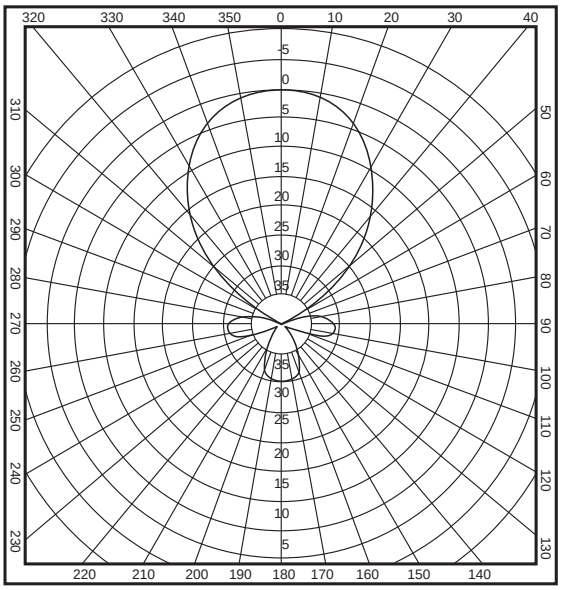

SINGLE UHF ANTENNA MODELS:

- ♦ WL 14-35/S
- ♦ WL 30-83/S

UHF ANTENNA

There are two rugged UHF models. Each antenna is designed for optimum performance over the desired band. The 75 Ohm feed point is sealed within the boom. A short length of cable is fitted with a standard "F" connector for connection to the down lead. These light weight, high quality antennas are small in size and big on performance.

WADE LOG PERIODIC ANTENNA

SINGLE ANTENNA — ELECTRICAL SPECIFICATIONS

SPECIFICATION	WL 14-35/S	WL 30-83/S
FREQUENCY RANGE	470-602 MHz	566-890 MHz
CHANNELS	14 To 35	30 To 83
GAIN	11 dBi	11 dBi
IMPEDANCE	75 Ohm	75 Ohm
VSWR	<1.25:1	<1.25:1
FR:BK RATIO	>25 dB	>25 dB
POLARIZATION	H or V	H or V
H. BEAM WIDTH	46 deg.	46 deg.
V. BEAM WIDTH	65 deg.	65 deg.
SIDE LOBE SUPPRESSION*	>30 dB	>30 dB
CONNECTORS	"F" Connector	
STD. MOUNT	3/8" U-Bolts to Fit 2" O.D. Pipe	

*WHERE INTERFERING SIGNALS SUCH AS CO-CHANNEL, ADJACENT CHANNEL AND GHOSTING ARE PRESENT, CUSTOM ARRAYS CAN BE DESIGNED TO REDUCE THE LEVEL OF INTERFERENCE BY AS MUCH AS 40 dB IN MOST CASES.

Printed in Canada 2005

WADE LOG PERIODIC ANTENNA

SINGLE ANTENNA — WIND AND ICE LOADING

SPECIFICATION	WL 14-35/S	WL 30-83/S
BOOM LENGTH	36.25"	41.5"
WEIGHT (LBS):		
NO ICE*	5.0	5.7
1" RADIAL ICE**	30	34
WIND LOAD (LBS):		
NO ICE*	15	17
1" RADIAL ICE**	17	19
WIND TORQUE (Ft-Lbs):		
NO ICE*	25	32
1" RADIAL ICE**	23	29

*WIND SPEED 100 MPH
**HALF WIND 50 MPH

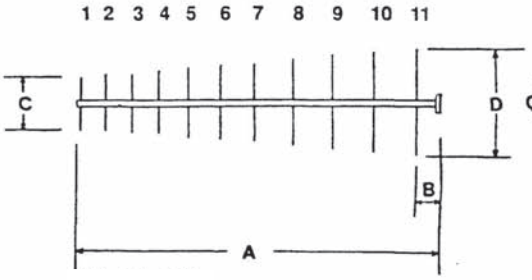

WL 14 – 35/*

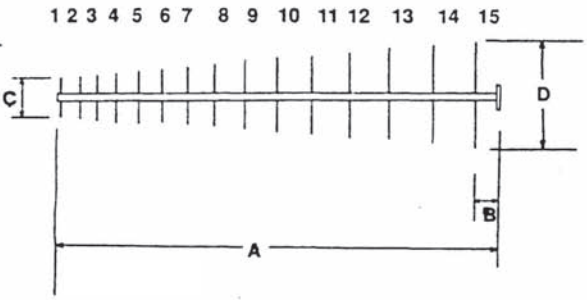

WL 30 – 83/*

WADE LOG PERIODIC ANTENNA

SINGLE ANTENNA — OVERALL DIMENSIONS

SPECIFICATION		WL 14-35/S	WL 30-83/S
NUMBER OF ELEMENTS		11	15
BOOM LENGTH	(A)	36.25"	41.5"
STUB LENGTH	(B)	5.5"	5.5"
SHORTEST ELEMENT	(C)	4.2"	3.75"
LONGEST ELEMENT	(D)	12.0"	10.0"

Printed in Canada 2005

Station WCVE-TV • Analog Channel 23, DTV Channel 42 • Richmond, VA

Expected Change In Coverage: Licensed Operation

Licensed (solid): 160 kW ERP at 346 m HAAT, Network: PBS
vs. Analog (dashed): 2300 kW ERP at 346 m HAAT, Network: PBS

Market: Richmond-Petersburg, VA

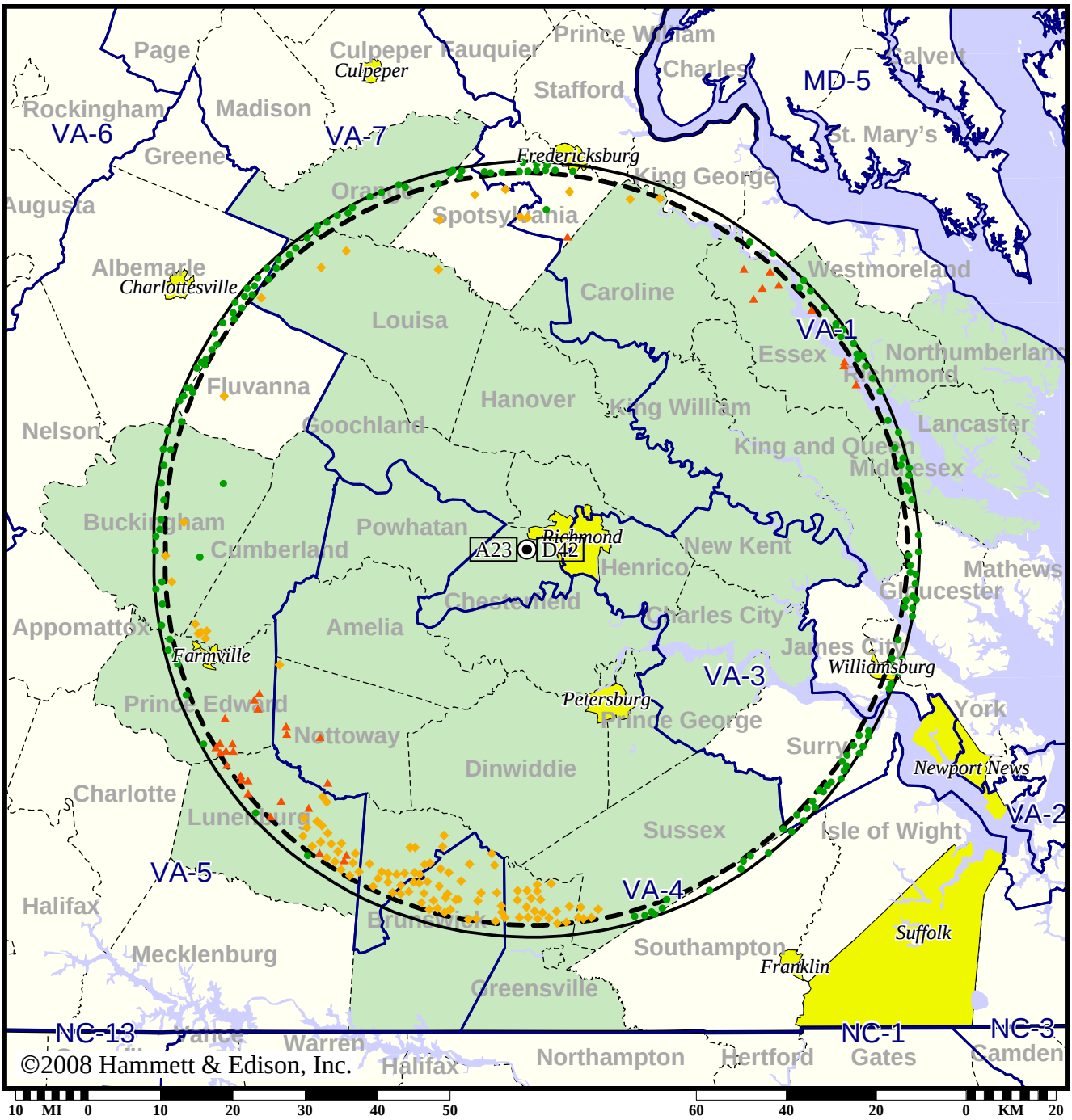

●	Coverage gained after DTV transition
(no symbol)	No change in coverage
◆	Coverage lost but still served by same network
▲	Coverage lost and no other service by same network

WCVE-TV Licensed

TV Station WCVW • Analog Channel 57, DTV Channel 44 • Richmond, VA

Expected Change In Coverage: Granted Construction Permit

CP (solid): 112 kW ERP at 328 m HAAT
vs. Analog (dashed): 50.0 kW ERP at 293 m HAAT

Market: Richmond-Petersburg, VA

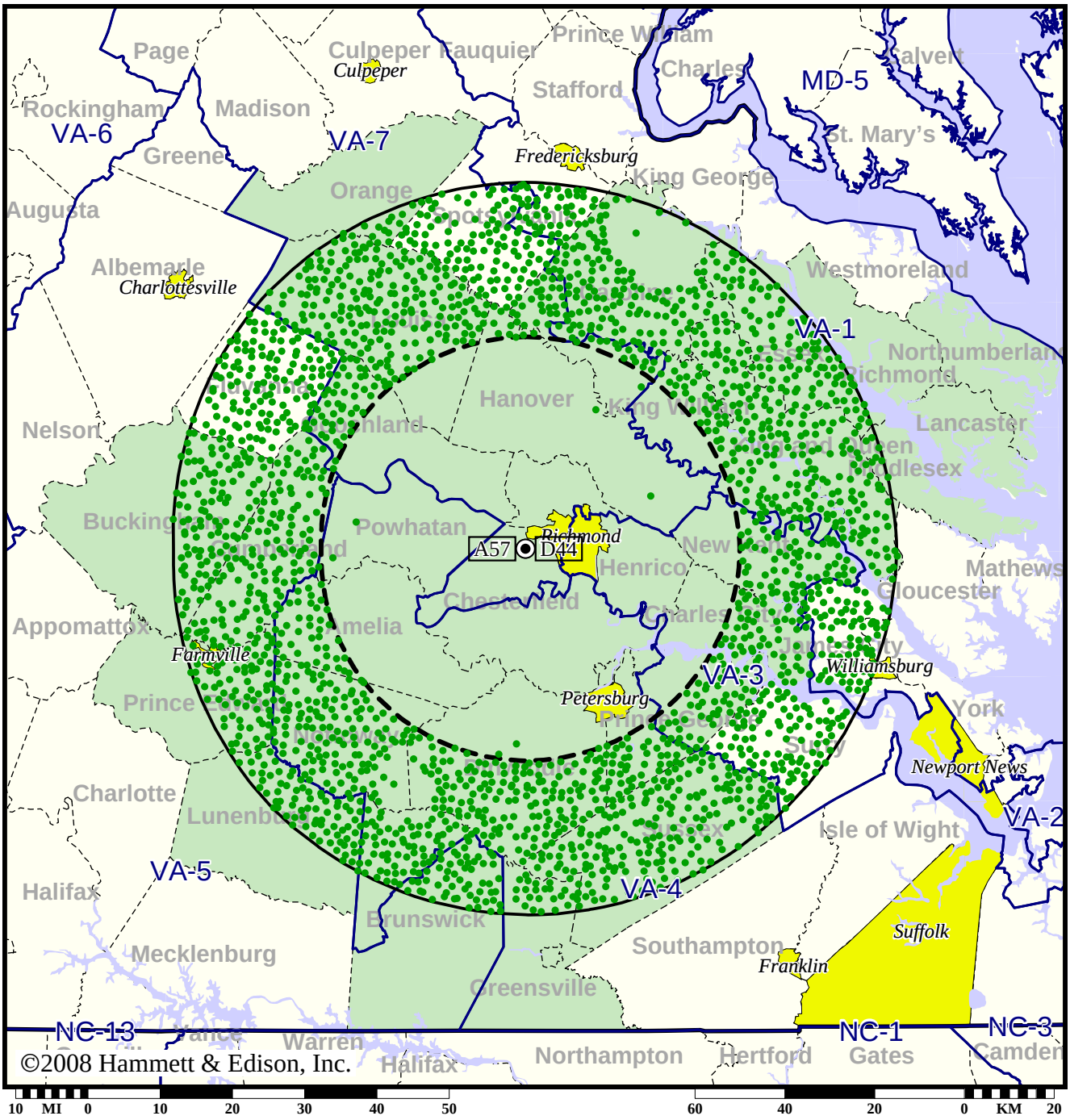

● Coverage gained after DTV transition
(no symbol) No change in coverage

Station WRIC-TV • Analog Channel 8, DTV Channel 22 • Petersburg, VA

Expected Change In Coverage: Granted Construction Permit

CP (solid): 850 kW ERP at 328 m HAAT, Network: ABC
vs. Analog (dashed): 269 kW ERP at 321 m HAAT, Network: ABC

Market: Richmond-Petersburg, VA

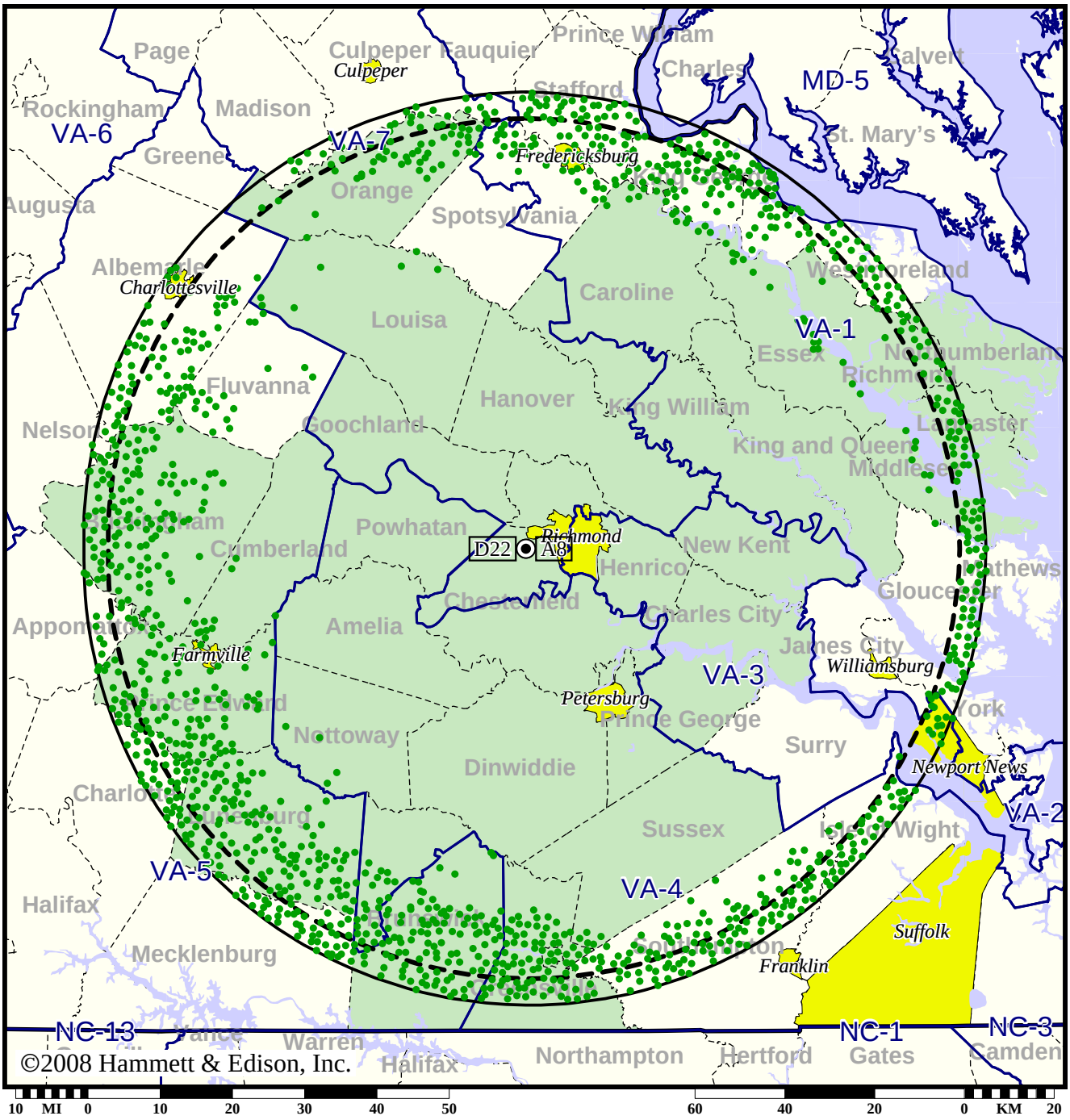

● Coverage gained after DTV transition

(no symbol) No change in coverage

Station WRLH-TV • Analog Channel 35, DTV Channel 26 • Richmond, VA

Expected Change In Coverage: Post-Transition Appendix B Facility

Appendix B (solid): 800 kW ERP at 328 m HAAT, Network: Fox
vs. Analog (dashed): 2570 kW ERP at 384 m HAAT, Network: Fox

Market: Richmond-Petersburg, VA

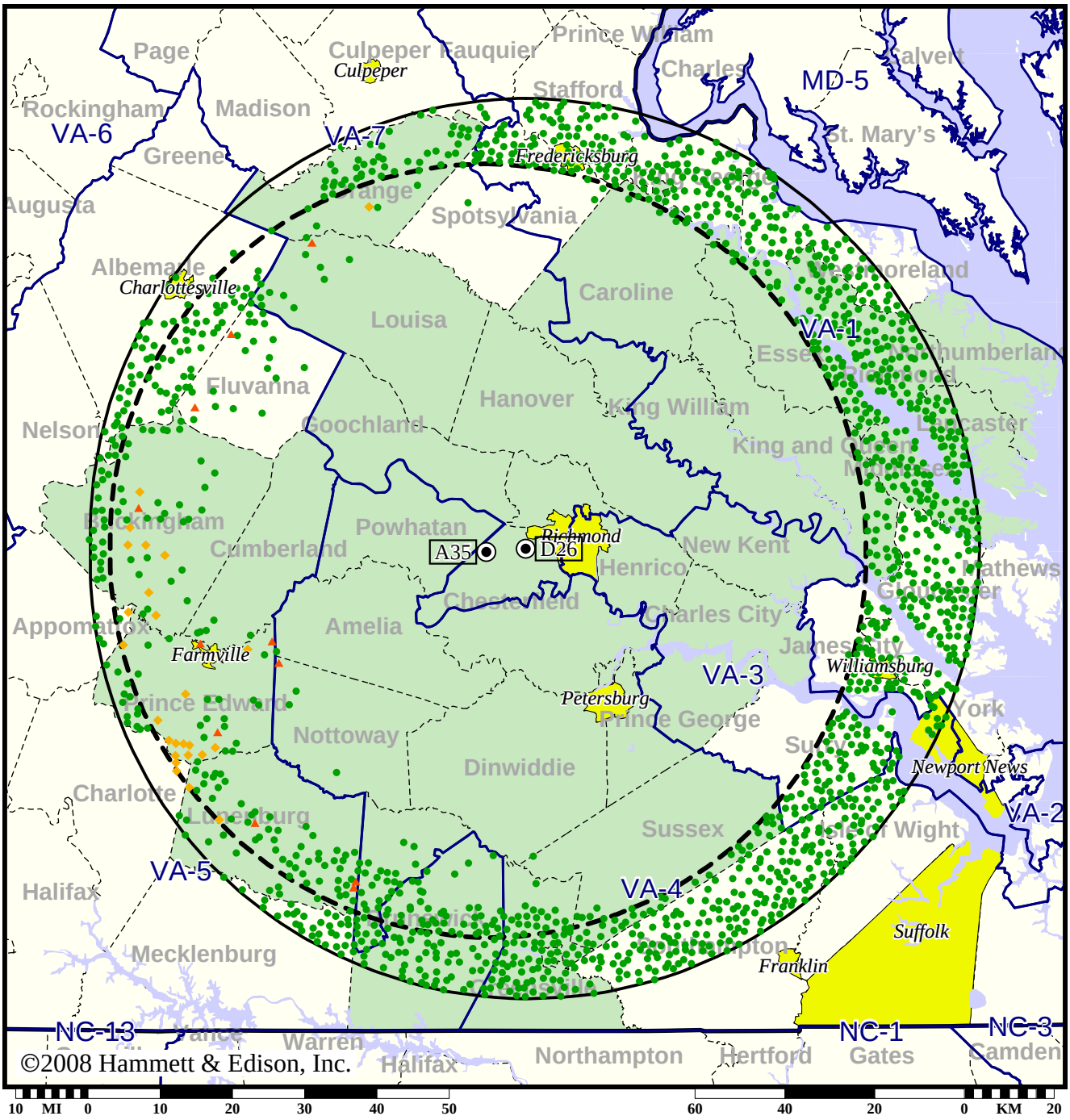

● Coverage gained after DTV transition

(no symbol) No change in coverage

◆ Coverage lost but still served by same network

▲ Coverage lost and no other service by same network

Station WTVR-TV • Analog Channel 6, DTV Channel 25 • Richmond, VA

Expected Change In Coverage: Licensed Operation

Licensed (solid): 410 kW ERP at 347 m HAAT, Network: CBS
vs. Analog (dashed): 100 kW ERP at 256 m HAAT, Network: CBS

Market: Richmond-Petersburg, VA

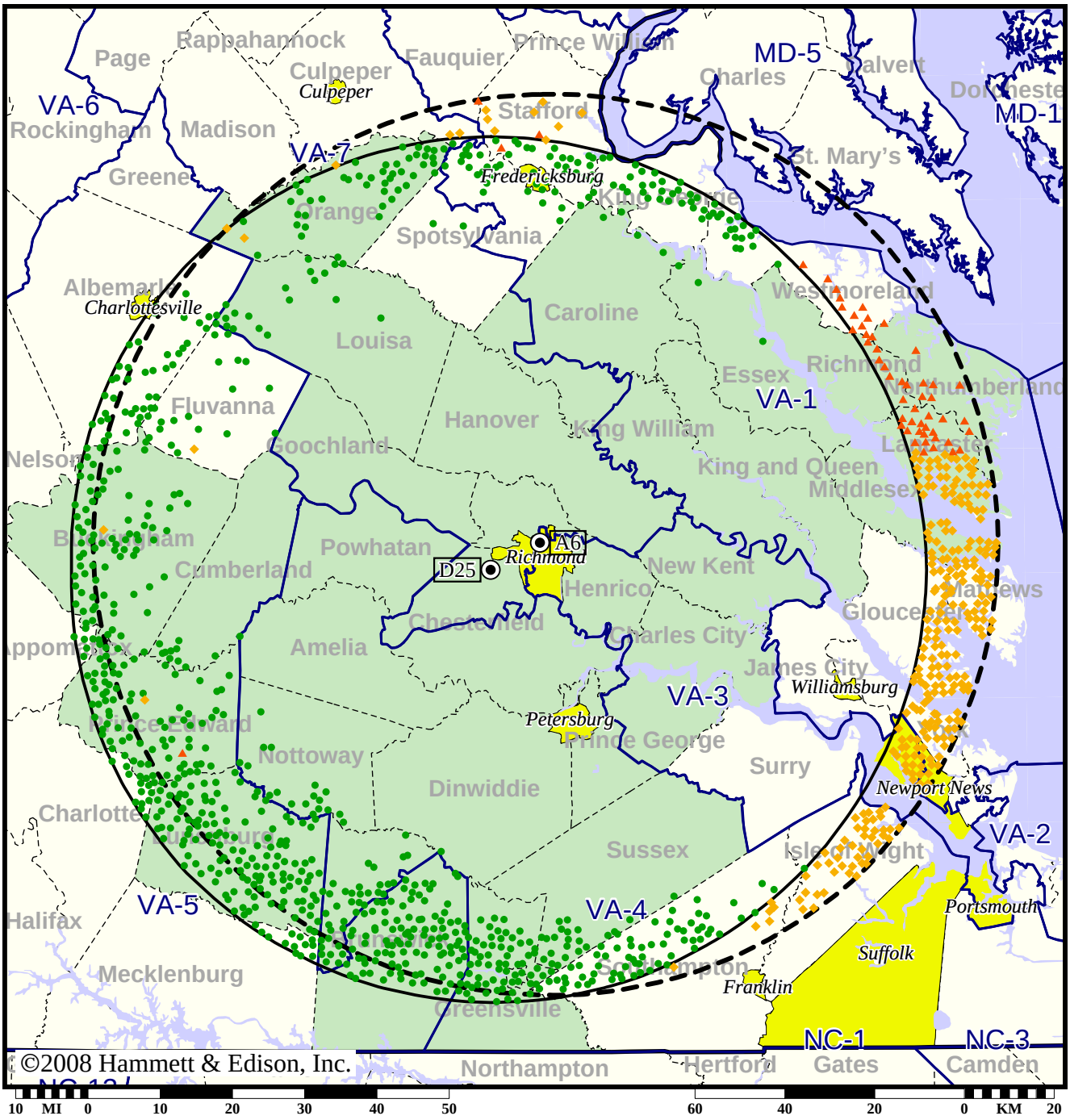

- ● Coverage gained after DTV transition
- (no symbol) No change in coverage
- ◆ Coverage lost but still served by same network
- ▲ Coverage lost and no other service by same network

WTVR-TV Licensed

TV Station WUPV • Analog Channel 65, DTV Channel 47 • Ashland, VA

Expected Change In Coverage: Licensed Operation

Licensed (solid): 1000 kW ERP at 249 m HAAT
vs. Analog (dashed): 2690 kW ERP at 263 m HAAT

Market: Richmond-Petersburg, VA

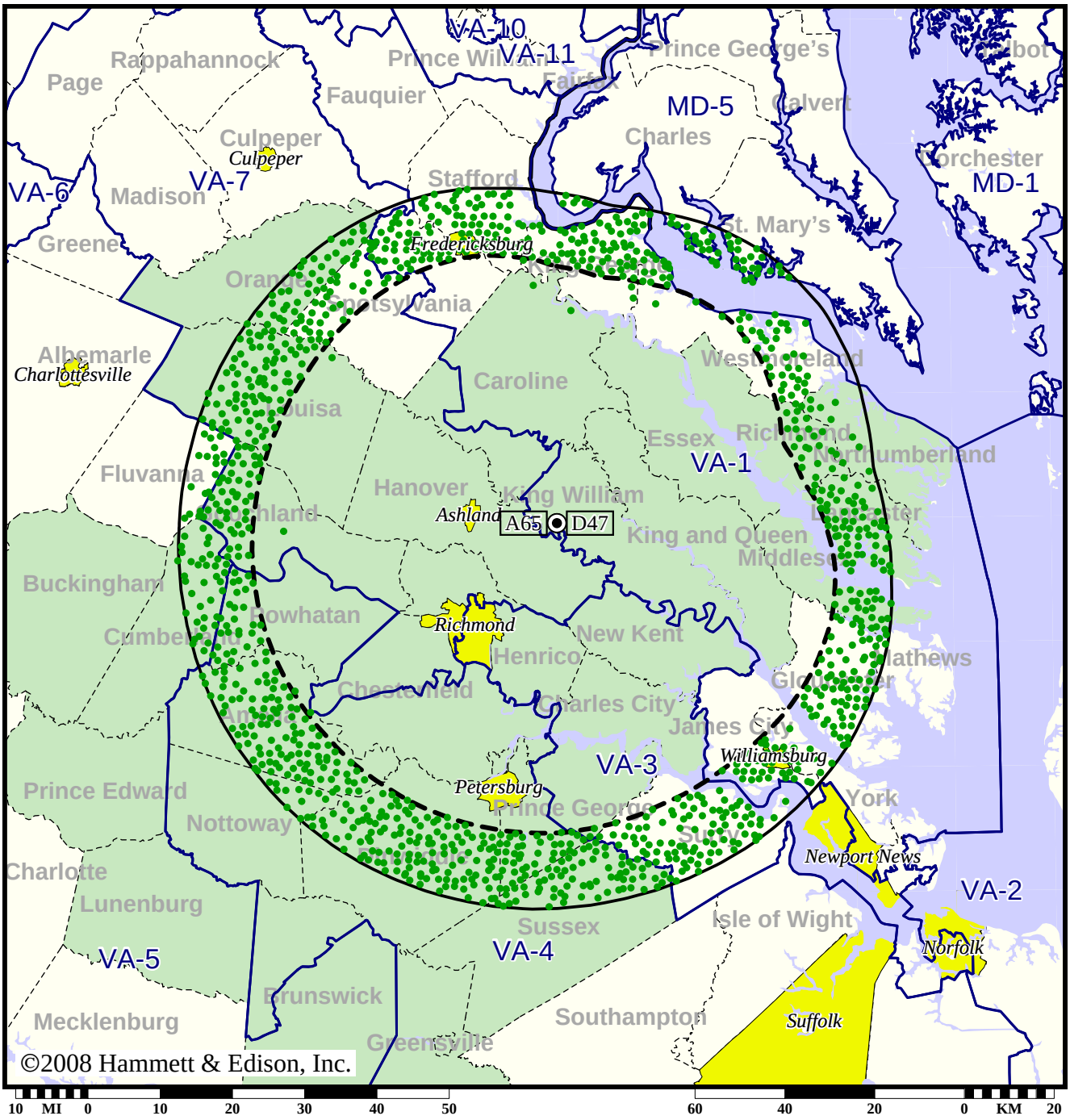

● Coverage gained after DTV transition
(no symbol) No change in coverage

WUPV Licensed

TV Station WWBT • Analog Channel 12, DTV Channel 12 • Richmond, VA

Expected Change In Coverage: Granted Construction Permit

CP (solid): 5.65 kW ERP at 241 m HAAT, Network: NBC
vs. Analog (dashed): 316 kW ERP at 241 m HAAT, Network: NBC

Market: Richmond-Petersburg, VA

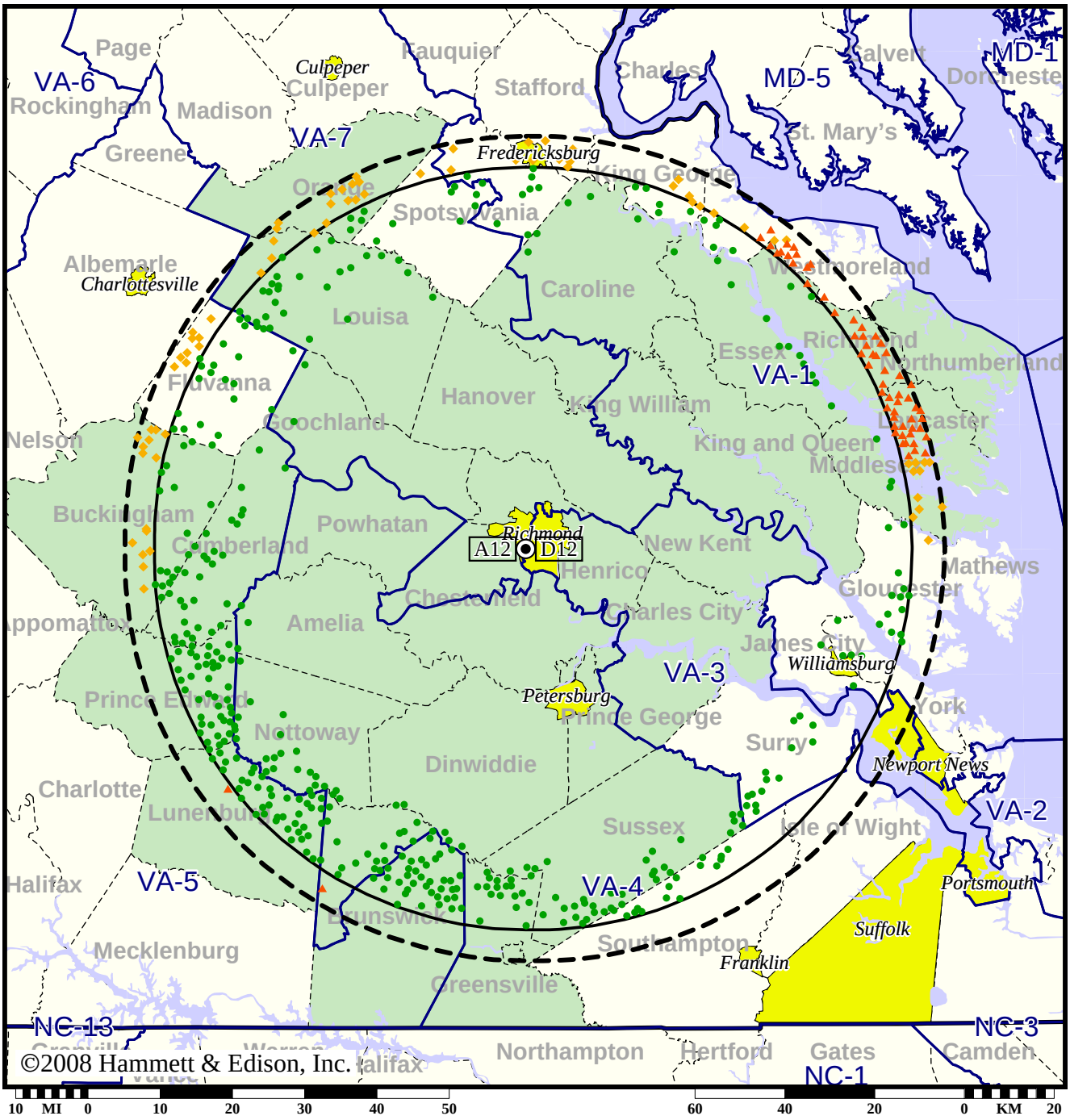

● Coverage gained after DTV transition

(no symbol) No change in coverage

◆ Coverage lost but still served by same network

▲ Coverage lost and no other service by same network

APPENDIX V

CARL T. JONES
CORPORATION

REPORT ON FREDERICKSBURG HEAD-END MEASUREMENT PROGRAM

Prepared for: National Cable and Television Association

PURPOSE

On December 29th and 30th, 2008, field tests were conducted to determine if a "white space TVBD" device might have a detrimental effect on the "over-the-air" reception of DTV broadcast signals at a cable head-end. A cable system in a typical community will operate from a head-end where the signals to be provided to the system's customers will be received and assembled for distribution to the community via cable. A cable head-end usually employs a receive antenna support structure to elevate the receive antenna(s) to heights above the ground sufficient to provide acceptable reception of the desired signal(s). Other, non broadcast, program sources are usually received by satellite dish antennas directly from the program providers. It is incumbent upon the cable service provider to protect its signal acquisition system from all interference which might naturally occur, or which might be generated by other devices, licensed or un-licensed.

There is certainly reason for concern, especially at head-end locations where the ambient DTV broadcast signal levels might be near their noise limited values. Such locations are predictably among the most vulnerable to interference to received DTV broadcast signals.

Arrangements were made to use the COX Cablevision head end in Fredericksburg, Virginia for the planned interference evaluation. This head end facility is located between the Washington, D.C. metropolitan area and the Richmond, Virginia DMA, favorably close

Carl T. Jones Corporation
7901 Yarnwood Court Springfield, Virginia 22153-2899 (703) 569-7704 Fax: (703) 569-7704

to the Carl T. Jones offices.

ANTENNA CALIBRATION METHODOLGY

The antenna selected for use as a transmitting antenna for the field measurement program is a WINEGARD Model HD 9095P UHF Yagi Style Antenna, since the maximum radiated power to be utilized is 4 Watts EIRP. In order to determine the actual gain of the chosen antenna, it was compared as a receiving antenna with a resonant dipole. The Carl T. Jones measurement van, which contains a 30 foot pneumatic mast, was used to elevate the antennas for comparison.

A Potomac Instruments calibrated dipole antenna was used to receive TV signals on several channels of interest, and signal levels were recorded. The WINEGARD model HD 9095P was substituted and measurements were repeated on those channels. Gain factors for the WINEGARD antenna were calculated for the channels of interest, and were corrected for comparison with an isotropic antenna by the 1.64 factor (2.15 dB) between dipole and isotopic antennas.

The WINEGARD antenna was then connected to a 75 ohm low-loss downlead coaxial cable. Since the power amplifier output impedance is 50 ohms and the transmit antenna and transmission line impedance is 75 ohms, a low-loss transformer was inserted between the power amplifier output and the line to the antenna. The transformer and line loss were both measured and combined with the measured antenna gain factors to determine the power required at the 50 ohm side of the 50/75 ohm transformer. The power

so determined to be required in order to achieve 4 watts EIRP was adjusted using both a Boonton power meter and an HP power meter. Transmission from the WINEGARD antenna was confirmed by use of a resonate dipole located approximately 2 meters AGL, which was connected to a Rhode & Schwartz spectrum analyzer.

MEASUREMENT METHODOLOGY

A vector signal generator was programmed to create a signal simulating the bandwidth and spectral characteristics of a “white space” device and place that signal as needed on any channel permitted by the FCC’s proposed rules. A wideband amplifier was employed along with a wideband antenna mounted on a mast which could be raised to 9.1 meters above the ground. The system was calibrated to provide a signal on any specified channel at a radiated power level up to 4 Watts EIRP. A receive dipole antenna was configured in the test vehicle setup to feed a signal to a spectrum analyzer to observe the transmitted signal. The test vehicle containing the equipment was driven to a total of 12 test points during the tests.

OBSERVATIONS AND RESULTS

At each test point the geographic coordinates were determined and the direction to the COX head end was determined. The antenna mast was raised and rotated to point the transmitting antenna toward the head end. Channel 44 was selected for the test channel. Channel 44 is assigned to a public station in Richmond. It is noteworthy that the

Fredericksburg head end site is outside of the protected contour for Ch.44, but the received signal there is much stronger than the -41 dBu nominal level at the protected contour boundaries for the station. That station is received at the COX head end but is not inserted into the cable system, thereby providing a convenient test channel. Channel 46 was vacant at the head end location, providing a nearby channel for measurement of an interfering signal.

At each test point the interfering signal's level was increased on channel 44 until the observer at the head end saw interference to the received picture, or until the signal level reached an EIRP of 4 watts. In each instance the generator was switched to channel 46 in order to observe what interfering signal level was received at the head end location.

At six of the twelve test points was there enough interfering signal available at the head end location to rise above the noise on channel 46. At five of the test points there was enough signal available to interfere with reception on channel 44. The furthest test point (# 12) from which a signal above the noise on channel 46 was visible is located 3.11 kilometers from the head end, and in the direction about 5 degrees off the main beam of the head end receive antenna. The furthest test point (# 7) from which a signal strong enough to interfere with the reception on channel 44 is 2.95 kilometers from the head end, and in the direction of about 15 degrees off the main beam of the head end receive antenna.

In the five instances of interference to the reception of channel 44, the level of interfering signal at the interference threshold was determined to be between about 15.5

and 17.7 dB below the desired signal on channel 44.

CONCLUSIONS

At the five locations where interference was observed, the threshold of interference occurred when the received TVBD interfering signal was 15.5 to 17.7 dB below the desired signal level.

At seven of the twelve test locations no interference to the reception of Channel 44 was observed with the TVBD signal power adjusted to the maximum permissible level of 4 watts EIRP. It is believed that the combination of a strong desired signal and irregular terrain between the interfering transmission antenna and the head-end receiving antenna were contributing factors to the lack of observed interference.