Before the
Federal Communications Commission
Washington, DC 20554

In the Matter of	)	
	)	GN Docket No. 09-47
A National Broadband Plan For Our Future	)	
Public Notice #6	)	GN Docket No. 09-51
	)	
	)	GN Docket No. 09-137

To: The Commission

COMMENTS OF ERICSSON INC

Ericsson Inc ("Ericsson") submits these Comments in response to the Federal Communications Commission's ("Commission") Public Notice concerning Spectrum for Broadband.[1] In this *Notice*, the Commission seeks comment on the sufficiency of spectrum for wireless broadband as well as specific information on the use, availability, and management of spectrum. In particular, the Commission seeks comment on whether spectrum bands are being used in the most efficient and productive way and on specific steps the Commission should take in its overall spectrum management practices to ensure that spectrum is fully utilized to maximize its total value.[2]

In other spectrum-related proceedings, Ericsson has recommended that the Commission take immediate steps to identify new, globally harmonized licensed

[1] Comment Sought on Spectrum for Broadband, NBP Public Notice # 6, *Public Notice*, GN Docket Nos. 09-47, 09-51, 09-137, DA 09-2100, (Sept. 23, 2009) ("*Notice*").
[2] *See*, *Notice* Questions 4 (c) and (e) at page 6.

spectrum for mobile services.[3] In addition, Ericsson has generally urged the Commission to take a comprehensive look at its regulatory regime to: 1) revise its regulatory framework to support wider bandwidth allocations; and 2) rework its rules and policies so that they are technology neutral in their application. Ericsson continues to support such action.

Pursuant to the Commission's request, in these Comments, Ericsson proposes a change to the Commission's Out of Band Emissions ("OOBE") limits based on designated bandwidth to promote more efficient and productive use of spectrum and permit the fuller utilization of scarce spectrum resources.[4] Specifically, Ericsson recommends that the Commission establish a fixed attenuation for technologies greater than 5 MHz. Ericsson's proposed revision of the OOBE rules is in the public interest for three reasons. First, the proposed revision will ensure that the rules are technology neutral in their application. Second, the proposed revision supports innovation. Third, the proposed revision does not change the interference landscape for existing or adjacent licensees. For these reasons, Ericsson encourages the Commission to act quickly to modify its OOBE limits to keep pace with advances in technology.

1. Revising the OOBE Rules Ensures the Commission's Rules are Applied in a Technology Neutral Manner.

Technology is evolving toward wider bandwidth utilization because these technologies, like Long Term Evolution ("LTE"), offer distinct performance and efficiency advantages that benefit consumers. For example, with LTE, Carriers are able

---

[3] *See e.g.* Ericsson's Comments filed in the Commission's *Wireless Innovation and Investment Notice of Inquiry* and in the Commission's *National Broadband Plan for Our Future Notice of Inquiry*.

[4] *See* 47 CFR § 27.53 Emission limits.

to support more bandwidth intensive services and to provide more bandwidth to more users. However, the Commission's current OOBE rules inadvertently discriminate against broadband systems that use wider bandwidths because the emission limits are based on designated bandwidth. Although wider band technologies, like LTE using frequency blocks of 10 MHz or greater, can still meet the Commission's OOBE rules, eliminating the designated bandwidth criteria promotes the technology neutral application of the Commission's OOBE rules.[5]

A prime example how the Commission's OOBE rules disparately effect wider band technologies can be found in 47 CFR § (h)(1), where the attenuation requirement is based on the designated bandwidth of the frequency block used.[6] In practice, this rule requires wider band technologies to satisfy more stringent OOBE requirements than narrower band technologies.

According to the current OOBE rules, emissions in the 1 MHz immediately outside and adjacent to the licensee's frequency block must be attenuated by 43 + 10 log P (-13 dBm) based on 1% of the designated bandwidth. *See* Figure A below.

---

[5] LTE can be deployed in a range of bandwidths from 1.4, 3, 5, 10, 15 to 20 MHz. LTE-Advanced can be deployed in bandwidths up to 100 MHz.

[6] *See e.g.* 47 CFR § 27.53 (h) For operations in the 1710–1755 MHz and 2110–2155 MHz bands, the power of any emission outside a licensee's frequency block shall be attenuated below the transmitter power (P) by at least 43 + 10 log[10](P) dB.

> (1) Compliance with this provision is based on the use of measurement instrumentation employing a resolution bandwidth of 1 megahertz or greater. However, in the 1 megahertz bands immediately outside and adjacent to the licensee's frequency block, a resolution bandwidth of at least one percent of the emission bandwidth of the fundamental emission of the transmitter may be employed. The emission bandwidth is defined as the width of the signal between two points, one below the carrier center frequency and one above the carrier center frequency, outside of which all emissions are attenuated at least 26 dB below the transmitter power.

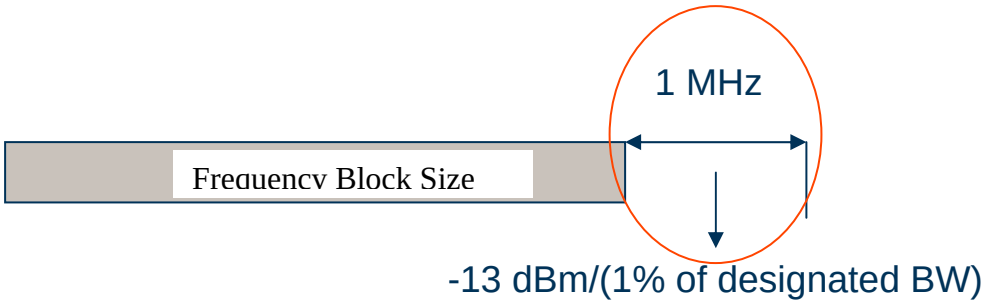

Figure A

Under the rule, a 5 MHz-sized block has a designated bandwidth of 50 kHz (1% of 5 MHz). For a 20 MHz-sized block, the designated bandwidth is 200 kHz. The chart in Figure B outlines the varying attenuation requirements for different block sizes.

Frequency Block Size (MHz)	1% Designated BW (kHz)	Attenuation in 1st Megahertz (kHz)
5	50	-13 dBm/50 kHz
10	100	-13 dBm/100 kHz = -16 dBm/50 kHz
20	200	-13 dBm/200 kHz = -19 dBm/50 kHz

Figure B

Consequently, under the current rules, the attenuation requirement for a 5 MHz-sized block would be -13 dBm/50 kHz. The attenuation requirement for a 20 MHz-sized block would be -13 dBm/200 kHz or -19 dBm/50 kHz. As Figures B and C illustrate, this means that a 20 MHz frequency block has a 6 dB *more* stringent attenuation requirement.

Figure C illustrates how the rule disparately applies to deployments using a single 20 MHz carrier versus (4) 5 MHz carriers. Both of these configurations have the same power spectral density. However, the wider bandwidth implementation, which is consistent with the direction of innovation to date, must attenuate its OOBE by an additional 6 dB. Thus, using the LTE example, a Carrier that deploys LTE in a 10 MHz- or 20 MHz-sized block would face more stringent attenuation requirements than a

competitor deploying LTE in four 5 MHz-sized blocks even though the two deployment scenarios have the same RF occupancy characteristics.

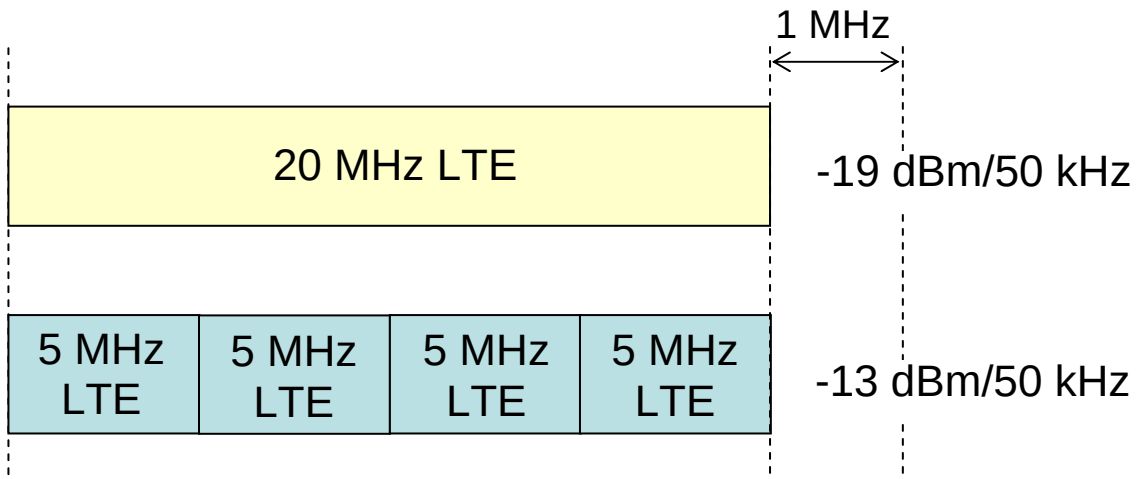

Figure C

One way to remedy the disparate impact of the current OOBE rules on wider band technologies is to remove designated bandwidth in the OOBE calculations. Ericsson recommends that the Commission establish a fixed attenuation (based on the current 5 MHz frequency block) for technologies greater than 5 MHz, i.e. -13 dBm/50 KHz in the one MHz immediately outside and adjacent to the frequency block. In Ericsson's view, changing the OOBE rules in this way is the right approach.

Ericsson cautions the Commission against imposing additional emissions limits on the current and existing implementation of technologies using frequency blocks less than 5 MHz. Any increase for narrowband technologies would have substantial negative impacts on the existing base of equipment and would unnecessarily compromise the integrity of existing systems like GSM and cdma2000. Instead, the OOBE limits for these narrowband technologies should be grandfathered and the Commission should remove the bandwidth dependency for all technologies greater than 5 MHz bandwidths

because this is the aspect of the rule that unfairly discriminates against higher bandwidth technologies.

2. Revising the OOBE Rules Supports Innovation.

Industry is continually engineering new, wider bandwidth technologies, like LTE, to maximize the use of spectrum. Wider bandwidth technologies enable Carriers to accommodate more bits per hertz and bring more bandwidth intensive mobile products and services to U.S. consumers. In this very dynamic ecosystem, it is important that the Commission's rules do not delay or make the deployment of new technologies unnecessarily difficult. Rather, the rules should be flexible enough to permit innovation and streamlined adoption of enhanced technologies. Changes, like the OOBE limits change Ericsson proposes, further this goal and support the innovation that helps deliver more content-rich applications and services to U.S. consumers.

The disparate impact of the current rules has real consequences on the availability of innovative technologies. Carriers seek to design and dimension their networks in the most efficient and cost effective manner. One way to meet the more stringent OOBE limits is to lower the output transmitter power. When output power is lowered, more transmitter sites are needed to cover a particular area with an acceptable signal to noise ratio. This makes it difficult for Carriers to integrate wider band technologies into their existing networks. In addition, reduced transmitter output power can also impact site location selection decisions for new deployments and potentially increases the number of transmitters needed to cover a given area. As a result, the existing OOBE limits can increase the cost and complexity of wider band technology deployments.

Wider band technologies, like LTE using frequency blocks of 10 MHz or greater, will meet the Commission's OOBE rules. However, as discussed above, the current rules can increase the cost of broadband network deployments. In addition, the rules potentially impact other innovative technologies that can improve spectrum efficiency and the availability of broadband technologies and services.

For example, the current OOBE rules could divert investment in innovative technologies that promote more efficient and flexible use of spectrum, like Multi-Standard Radios ("MSR"). MSRs permit several air interface technologies (e.g. LTE and GSM) to be simultaneously deployed in the same frequency block.[7] The Commission's current OOBE rules based on "designated bandwidth" are not adaptable to MSR deployments. Since MSRs can transmit several different air interfaces, an emissions limit based on "designated bandwidth" would not apply to MSR deployments. Resolving how the existing rules would apply to MSRs, or other new technologies, can be a costly and time consuming barrier to innovation. For this reason, Ericsson urges the Commission to revise its OOBE rules to ensure that they keep pace with and support technology advancements.

3. Eliminating the Designated Bandwidth Condition in the OOBE Rules Does Not Change the Interference Landscape.

The Commission can make the foregoing rule change with out compromising existing or adjacent spectrum users. The current emissions limit for 5 MHz-sized

---

[7] Work in 3GPP is already underway to define MSR physical layer characteristics, such as OOBE and blocking, when one transmitter sends out several carriers. Ericsson encourages the Commission to immediately adopt a fixed attenuation requirement to address the disparity in its OOBE rules and mitigate their impact on AWS deployments. In Ericsson's view, future developments in MSRs and other technologies could warrant further revision of the OOBE rules.

blocks— -13 dBm/50 KHz in the one MHz immediately outside and adjacent to the frequency block—is already in place to protect adjacent users from harmful interference. Further, the potential for interference does not change because of the block size utilized. Therefore, there is no technical reason to impose a stricter attenuation requirement on wider band technologies than the requirement imposed on narrower band technologies.

Moreover, as noted above, LTE can be deployed in a range of bandwidths from 1.4, 3, 5, 10, 15 to 20 MHz. There is no technical reason that LTE deployed in one 20 MHz-sized block should be held to a stricter attenuation requirement than LTE deployed in four 5 MHz-sized blocks when the RF occupancy characteristics in each deployment are identical. In either of these deployment scenarios, existing and adjacent licensees do not face any increased interference merely because the frequency blocks used are different. Accordingly, eliminating the designated bandwidth condition in the Commission's OOBE rules does not change the interference landscape.

CONCLUSION

Based on the foregoing, Ericsson respectfully recommends that the Commission restructure its emissions limits requirements to remove the bandwidth dependency for technologies with bandwidths greater than 5 MHz and instead implement a fixed attenuation requirement (based on the current 5 MHz frequency block). Ericsson recommends that the Commission act immediately to mitigate any impact that its current OOBE rules may have on AWS deployments. In the future, the OOBE limits may need further revision to accommodate MSR developments and other technology advances.

The proposed rule change will ensure that the Commission's rules are applied in a technology neutral manner, especially with respect to wider band technologies, and that

they support the innovation that brings U.S. consumers feature-rich products and services. Moreover, the proposed rule change will not negatively impact existing narrowband systems or adjacent licensees but rather will ensure that OOBE rules are appropriately applied to the technology advances that permit fuller and more efficient utilization of spectrum resources. For these reasons, the proposed change is in the public interest and should be implemented as soon as practicable.

Respectfully submitted,

ERICSSON INC

By:

Allison M. Ellis
Director, Regulatory Policy

Mark Racek
Director, Spectrum Policy

Ericsson Inc
1634 I Street, N.W., Suite 600
Washington D.C. 20006-4083

Telephone: (202) 824-0103
Facsimile: (202) 783-2206

October 23, 2009