Panasonic
ideas for life

Panasonic Corporation of North America
Technology Policy & Regulatory Affairs

November 9, 2009

Mr. George Arnold
100 Bureau Drive, Stop 8100
National Institute of Standards and Technology
Gaithersburg, MD 20899-8100

Re: **DRAFT NIST Framework and Roadmap for Smart Grid Interoperability Standards, Release 1.0**; Recommendations for additional standards and specification on the list of standards identified for implementation (Table 2). [Docket Number 0909201327-91328-01]

Panasonic herein provides its recommendations for additional standards and specifications on the list of standards identified for implementation (Table 2).

Panasonic commends NIST for the overall draft Framework and Roadmap for Smart Grid Interoperability. We agree with the report's overall objectives which recognize the need for "sound interoperability standards" that "enable diverse systems and their components to work together and to securely exchange meaningful, actionable information." Panasonic believes that the advent of Smart Grid networks will benefit consumers by enabling more intelligent control of electricity use in homes and commercial buildings.

We are concerned, however, that interference between Smart Grid Power Line Communication ("PLC") systems and consumer-owned or business-operated PLC networks must be carefully managed in order to avoid destructive interference, disruptions in both services, and consumer confusion – impediments to the development of both market segments. To avoid such an outcome, we recommend that NIST Interoperability Framework for Smart Grid standards require the use of the ITU-T Recommendation G.9972 which defines an efficient coexistence protocol that allows multiple and incompatible power line networking technologies to operate over the same wires without creating interference to each other.

CORPORATE BACKGROUND:

Panasonic Corporation of North America is the principal North American subsidiary of Panasonic Corporation (Panasonic [NYSE: PC]), a world leader in electronics and telecommunications technology and products. Based in Secaucus, NJ, Panasonic Corporation of North America ("Panasonic") markets in the United States a broad line of digital and other electronics products for consumer, business and industrial use. On September 17, 2009, Panasonic celebrated its 50th anniversary in the US. Today Panasonic has more than 5000 employees in the US, and also employs approximately 6500 in Canada and Mexico.

Panasonic also has deep and long experience in Home Energy Management and associated products in lighting systems, security monitors, heating & cooling solutions, power storage and generation, multimedia and entertainment products, energy management and display, kitchen/bath/living/bed room components, and also power distribution and management.

PANASONIC'S TECHNOLOGICAL CONTRIBUTIONS:

Panasonic is the founder of the High-Definition Power Line Communication (HD-PLC) Alliance (http://www.hd-plc.org/). The HD-PLC Alliance is a global, non-profit trade group whose purpose is to support the standardization and commercial success of the HD-PLC broadband over power line technology. HD-PLC's Wavelet OFDM technology was ratified by the IEEE Standards Association's P1901 Working Group (IEEE P1901) as a baseline standard for broadband over power line[1]. The IEEE 1901 standard will use transmission frequencies below 100 MHz and will be usable by all classes of PLC devices, including devices used for the first-mile/last-mile connection (<1,500 m to the premise) to broadband services, as well as devices used in buildings for local area networks. The IEEE 1901 Standard supports operations not only within the home but also over Medium Voltage and Low Voltage distribution power lines[2]. Furthermore, the IEEE 1901 Draft also has a *mandatory* power line coexistence protocol labeled Inter-System Protocol (ISP) that is complementary to ITU-T G.9960 (G.hn) which is already included in the NIST list of approved standards. The ISP protocol allows incompatible technologies operating over the same power lines to coexist, regardless of whether they are located outdoors or indoors[3].

Panasonic is also a founding board member of the HomeGrid Forum (http://www.homegridforum.org/), a global, non-profit trade group promoting the ITU-T G.hn standardization efforts for a unified next-generation wired home networking technology enabling high-speed communication over power lines, phone lines, and coaxial cable[4]. G.hn technology has been approved for use in Smart Grid applications by the National Institute Standards Technologies (NIST).

Panasonic is also the major technical contributor to the ITU-T G.9972 (G.cx) recommendation that enables multiple and incompatible power line networking technologies operating over the same wires to coexist without interference. Recommendation G.9972 has been unanimously consented by the ITU-T on October 9, 2009[5]. Note that the coexistence protocol defined in the G.9972 Recommendation is exactly the same as the ISP protocol defined in the IEEE 1901 Draft.

---

[1] See: "*Panasonic Technology Ratified as Key Element of IEEE P1901 Baseline Standard for Broadband Over Powerline*" (Jan 9, 2009) at: www.panasonic.com/pressroom.

[2] See: S. Galli, O. Logvinov, "Recent Developments in the Standardization of Power Line Communications within the IEEE," *IEEE Communications Magazine*, vol. 46, no. 7, July 2008

[3] See: S. Galli, A. Kurobe, M. Ohura, "The Inter-PHY Protocol (IPP): A Simple Co-Existence Protocol," *IEEE International Symposium on Power Line Communications* (ISPLC), Dresden, Germany, Mar. 30 – Apr. 1, 2009.

[4] See: V. Oksman, S. Galli, "G.hn: The New ITU Home Networking Standard," *IEEE Communications Magazine*, vol. 47, no.10, Oct. 2009.

[5] See: "*New ITU standard opens doors for unified 'smart home' network*" at: http://www.itu.int/newsroom/press_releases/2009/46.html

Panasonic's power line communication technologies will be interoperable with future devices based on the IEEE 1901 Standard and have been used successfully in Smart Grid field trials[6] and in communications between plug-in electric vehicles and home charging stations.[7] Panasonic is currently collaborating with the Japanese New Energy Technologies Development Org. (NEDO) to support the New Mexico Green Grid Initiative. We hope this Smart Grid trial will include Panasonic's solutions for distributed generation, photovoltaic, batteries and home energy management systems.

Panasonic is also a leading supplier of quality battery solutions, offering one of the broadest lines of primary and rechargeable batteries in the industry. Panasonic provided support for the Solar Electric Vehicle Team at the Massachusetts Institute of Technology (MIT SEVT), in their participation of the Global Green Challenge (GGC), held in October 2009 in Australia.[8]

Panasonic also announced development of a flexible battery module, consisting of its lithium-ion battery cells, to provide energy storage solutions for a wide range of environmentally friendly energy technologies, including in electric vehicles.[9] Lithium-ion batteries have been proven in many applications (e.g. laptop computers) and their light weight and greater capacity than other types of rechargeable batteries makes them a good choice for electric vehicles and/or for home energy use.

OVERVIEW OF THE PROBLEM:

As noted above, Panasonic has introduced In-Home PLC networking technologies. Panasonic first announced, demonstrated and exhibited its "HD-PLC" technology at the Consumer Electronics Show in Las Vegas, Nevada, in January 2004. With a data speed of 190 Mbps, Panasonic's HD-PLC adaptor makes it possible to connect and enjoy exceptional quality high-definition video content, music playback, real-time Internet gaming, VoIP telephone service, video home security monitoring, as well as connections of computers, printers and other devices to a unified network.

In the case where PLC networking technologies are used for control of demand response via a home's electric power lines from an electric meter, an appreciable portion of the spectrum space within that wiring would be consumed by that signal – often the very same spectrum space that In-Home PLC systems themselves require to function. Thus, the two systems would *mutually interfere* with each other in a destructive manner, disabling the Smart Grid PLC or reducing its performance (e.g. speed, robustness, capacity). In turn, the In-Home PLC system, if

---

[6] See: "*HD-PLC Effective in Improving National Infrastructure in Brazil*" (HD-PLC Magazine) at: http://hd-plcmag.com/en/feature/brazil01.html

[7] See: "*Electric Vehicles and Home Networks Linked by HD-PLC*" (HD-PLC Magazine) at: http://hd-plcmag.com/en/feature/ecocar01.html

[8] See: "*Panasonic to Sponsor MIT Solar Vehicle Team*" (July 31, 2009) at: www.panasonic.com/pressroom.

[9] See: "*Panasonic Develops High Energy Lithium-ion Battery Module with High Reliability*" (Oct 1, 2009) at: http://panasonic.co.jp/corp/news/official.data/data.dir/en091001-3/en091001-3.html

it monitors and adjusts its operation to bypass interference, will simply slow down; or may simply stop working altogether.

It is in the public interest to avoid such destructive interference within the electric wiring and assure that innovation and competition will thrive. The 'train wreck' of interference between competing PLC technologies in the home is avoidable if appropriately addressed by NIST's framework for interoperability. Unfortunately, at this time there is no government agency which has authority to establish regulation for PLC technologies in order to prevent interference *within* electric wiring. The Federal Communication Commission ("FCC") only regulates the radiated RF emission limits *outside* of the electric wiring as "carrier current systems."[10]

As a result, communication within electric wiring has been a kind of 'wild west' frontier, with interference mitigated by the consumer's choice and adoption of technology. When utility companies introduce smart meters utilizing PLC networking, however, the consumer may no longer have the choice to use different or more advanced PLC technologies for communication or broadband networking because, with the introduction of its 'smart grid', the utility has unintentionally assumed control over the electric wiring communication 'right of way'.

RECOMMENDATIONS:

Panasonic makes the following recommendations to NIST for inclusion in its Interoperability Framework:

- Include ITU-T G.9972 in the approved list of Smart Grid standards.
- Include a recommendation that all Smart Grid PLC standards utilize the ITU-T G.9972 coexistence standard or successor standards.
- Include IEEE 1901 in the approved list of Smart Grid standards. Note that since the ISP coexistence protocol defined in the IEEE 1901 Draft mirrors exactly Recommendation G.9972, then the IEEE 1901 Standard would satisfy the recommendation in the second bullet.
- Include in its list of recommended communications PHY/MAC standards only those PLC technologies that have been developed by a "voluntary consensus standards body" as defined by OMB Circular A-119.[11]

Panasonic believes that establishing the requirement of a coexistence protocol provides expanded opportunities for innovation and competition of products in the marketplace, and is a technologically achievable and economically feasible approach that will benefit both consumers and the deployment of Smart Grid PLC services. Adoption of such a requirement would allow a

---

[10] See 47 C.F.R. § 15.3(z).

[11] Office of Management and Budget Circular A-119, "Federal Participation in the Development and Use of Voluntary Consensus Standards and in Conformity Assessment Activities." A-119 defines a voluntary consensus standards body by the following attributes: (i) Openness; (ii) Balance of interest; (iii) Due process; (vi) An appeals process; and (v) Consensus.

larger ecosystem of products supporting diverse technologies to operate without interference for both Smart Grid and in-home entertainment, information or communications broadband applications.

We recognize that limiting the adoption of standards to voluntary consensus standards may eliminate from consideration some of those proprietary PLC solutions that are currently listed as "Additional Standards for Further review." These requirements are especially important for PHY/MAC standards [12], which define the basic physical connection requirements needed for interoperability. For these reasons, Panasonic strongly supports NIST's preference for "open, stable and mature industry-level standards developed in consensus processes from a standards development organization (SDO)" that is "openly available under fair, reasonable and non-discriminatory terms."[13] Indeed, NIST has a statutory obligation to "use voluntary consensus standards, both domestic and international, in its regulatory and procurement activities in lieu of government-unique standards, unless use of such standards would be inconsistent with applicable law or otherwise impractical." [14]

A) The technical reason why PLC coexistence is necessary

Power line cables are a *shared* medium. Thus, they cannot provide links dedicated exclusively to a particular subscriber, as the twisted pair cables used by telephone companies do. More specifically, power line cables connect a low-voltage transformer to a set of individual homes or set of multiple dwelling units, without isolation of each unit. Since power line cables are *shared* among a set of users, the signals that are generated within the premises can interfere with signals generated outside the premises, e.g. at the meter, in the low voltage distribution part of the grid, etc. Similarly, a user in one apartment or house may interfere with the signals generated in an adjacent house or apartment. Since it is difficult to contain locally the signals generated by a user, the more users in geographical proximity that use PLC, the more interference is generated on the power line both indoors and outdoors. As the interference increases, every user will experience a decrease in data rate as more packet collisions occur or possibly even a complete interruption of the service.

This phenomenon of *network overlap* is not dissimilar from what happens in other more conventional shared media, e.g., coax and wireless. However, coax and wireless devices can count on the availability of a much larger bandwidth than in the power line case and can therefore mitigate the effects of interference by using different communication channels separated in frequency (FDM). For this reason, it is necessary to devise mechanisms to limit the harmful interference caused by non-interoperable neighboring devices.

---

[12] PHY is a common abbreviation for the physical layer of the OSI model. A PHY connects a link layer device (often called a MAC) to a physical medium such as an optical fiber or copper cable.

[13] NIST Framework, page 46-47.

[14] OMB CircularA-119 establishes policies on Federal use of voluntary consensus standards in accordance with Pub. L. 104-113, the "National Technology Transfer and Advancement Act of 1995."

B) The importance to decouple Smart Grid/In Home broadband technical evolution

It is important to ensure coexistence between Smart Grid and In Home broadband technologies, since the former have traditionally a much longer obsolescence horizon than the latter. Furthermore, with the increasingly important role played by domestic energy measurement and control, it is likely that the number of homes fitted with energy metering and control devices that utilize Smart Grid technology will dramatically increase over the next few years. Similarly, the growing demand for broadband connectivity within the home is pushing In Home broadband technology towards higher and higher speeds, and it would be unreasonable to expect that future In Home high data rate devices would maintain interoperability with previously deployed low data rate Smart Grid devices.

The adoption of G.9972 in current and future devices will enable continued and efficient operation of smart grid devices in the presence of newly-deployed In Home broadband devices and allow for a smooth technology migration that also takes into account the different technological pace of evolution of power and CE equipment.

C) G.9972 can also alleviate interference issues created by the legacy installed base

As is well known, systems implementing G.9972 will be able to coexist with each other even if they use non-interoperable technologies. As detailed in a paper presented at the 2009 IEEE International Symposium on Power line Communications (see Footnote #3), G.9972 uses a simple and flexible protocol that adds a TDMA structure to the medium, efficiently allocating communication time to devices based on incompatible technologies. Furthermore, the protocol empowers nodes with the capability of detecting when it is possible to transmit simultaneously to other nodes in neighboring systems without causing harmful interference and thus increasing overall network throughput (time-reuse capability).

The very same coexistence protocol specified in the ITU-T Recommendation G.9972 is also specified as *mandatory* in the IEEE 1901 standard under the same of Inter-System Protocol ("ISP"). This will allow devices conforming to the IEEE 1901 standard to coexist with ITU-T G.hn devices that support the ITU-T Recommendation G.9972.

A lesser known but fundamental benefit of G.9972 and ISP is the capability of eliminating in most cases of practical interest the interference created by an installed base of legacy devices that does not currently support any coexistence mechanism[15]. Specifically, a dual G.hn/legacy device supporting G.9972 and configured as a Master Node can solve collision and interference problems caused by currently deployed legacy devices that do not support G.9972. While the G.hn side of the dual device will take care of complying with G.9972, it will also transfer the necessary information (network status, resource allocation information, etc.) to the legacy side of the dual device. The device will then send appropriate information in its legacy beacon frame to instruct the legacy devices in its network to transmit in alignment with the G.9972 TDMA slots.

---

[15] See, S. Galli (Panasonic), B. O'Mahony (Intel), C. Gomez (DS2), Contribution ITU-T SG15/Q4 09GS-078, "G.hn: Two Important Benefits of Coexistence via ISP," Geneva, Switzerland, May 2009. (Available to ITU members only.)

Since G.9972 assigns orthogonal resources to different systems, the dual device will never have to transmit simultaneously to G.hn and legacy devices. Furthermore, G.hn and legacy devices would also be able to interoperate via bridging.

CONCLUSION:

The driving force for innovation is the competition of ideas and products in the marketplace. In implementing its vision for establishing a "safe, secure and innovation-enabling Smart Grid", NIST has properly emphasized the critical role that standard play to "enable innovation where components may be constructed by thousands of companies."

For example, its discussion of electromagnetic interference[16], NIST said that "It is appropriate that **multiple standards be supported** to meet different real-world requirements and it is in keeping with Congress's requirement that the NIST technological framework be **technologically neutral to encourage innovation**." [Emphasis added.]

The national importance of rapidly deploying Smart Grid capabilities requires that interference between competing PLC technologies be similarly addressed. The adoption of a coexistence standard will mitigate such interference and permit shared access by different technologies to residential and commercial electric power wiring by consumer products, smart meters and appliances in a manner that assures technological neutrality and encourages innovation.

Respectfully submitted,

PANASONIC CORPORATION OF NORTH AMERICA

By: __/s/_____

Paul G. Schomburg, Senior Manager
Government & Public Affairs
Panasonic Corporation of North America
1130 Connecticut Avenue, NW, Suite 1100
Washington, DC 20036

November 9, 2009

[16] NIST Framework, Sec. 7.3.3

Attachments:

1. S. Galli, O. Logvinov, "Recent Developments in the Standardization of Power Line Communications within the IEEE," *IEEE Communications Magazine*, vol. 46, no. 7, July 2008
2. V. Oksman, S. Galli, "G.hn: The New ITU Home Networking Standard," *IEEE Communications Magazine*, vol. 47, no.10, Oct. 2009.
3. S. Galli, A. Kurobe, M. Ohura, "The Inter-PHY Protocol (IPP): A Simple Co-Existence Protocol," *IEEE International Symposium on Powerline Communications* (ISPLC), Dresden, Germany, Mar. 30 – Apr. 1, 2009.

Recent Developments in the Standardization of Power Line Communications within the IEEE

Stefano Galli, Panasonic
Oleg Logvinov, Arkados

ABSTRACT

Broadband connectivity to and within the home has been available to consumers for some time through various technologies. Among those technologies, power line communications is an excellent candidate for providing broadband connectivity as it exploits an already existing infrastructure. This infrastructure is much more pervasive than any other wired alternative (both *to* and *within* the home), and it allows virtually every line-powered device to become the target of value-added services. Therefore, PLC may be considered as the technological enabler of a multitude of future applications that probably would not be available otherwise. The most fundamental barrier to the widespread adoption of broadband PLC is the current lack of an international technical standard issued by a credible and globally recognized standards-setting body. Hopefully, this barrier will be eliminated soon through the work of the IEEE P1901 Corporate Standards Working Group. This group, which was created in June 2005, is entering a crucial phase. This article stresses the importance of standardization in the PLC context, gives an overview of the current activities of the IEEE P1901 working group, and also describes some of the technical challenges that the future 1901 standard must address to ensure the success of PLC in the marketplace.

INTRODUCTION

The idea of using power lines to support data communications is not new; the first applications of power line communications (PLC) date to over 100 years ago [1]. The first reported applications of PLC were remote voltage monitoring in telegraph systems and remote meter readings. Today the interest in PLC spans several important applications: broadband Internet access, indoor wired local area networks (LANs) for residential and business premises, in-vehicle data communications, Smart Grid applications (advanced metering and control, real-time energy pricing, peak shaving, mains monitoring, distributed energy generation, etc.), and other municipal applications, such as traffic light and street lighting control.

Power line networks were originally designed for distribution of power at 50[1] Hz or 60[2] Hz. The use of this medium for data communication at higher frequencies presents several technical challenges. The structure of the mains grid, as well as indoor wiring and grounding practices differ from country to country and even within a country. Additionally, the power line channel is a harsh and noisy transmission medium that is very difficult to model, is frequency-selective, is impaired by colored background noise, and also is affected by periodic and aperiodic impulsive noise [1, 2]. The power line channel is also time-varying. The channel transfer function of the power line channel may vary abruptly when the topology changes, that is, when devices are plugged in or out or switched on or off. However, the power line channel also exhibits a short-term variation because the high-frequency parameters of electrical appliances depend on the instantaneous amplitude of the mains voltage [3]. A fundamental property of the power line channel is that the time-varying behavior mentioned previously is actually a *periodically* time-varying behavior, where the frequency of the variation is typically twice the mains frequency (50 or 60 Hz). An example of this behavior, unique to the power line channel, is shown in Fig. 1, where the measured time variation of an indoor power line channel-transfer function is shown. Additional challenges are due to the fact that power line cables are often unshielded and thus become both a source and a victim of electromagnetic interference (EMI). As a consequence, PLC technology must include mechanisms to ensure successful coexistence with wireless and telecommunication systems, as well as be robust with respect to impulse noise and narrow band interference.

[1] *The mains voltage of Europe is 230V (50Hz) because at the beginning of 1900, the German AEG had a virtual monopoly on electrical power systems, and AEG decided to use 50 Hz.*

[2] *The United States has a nominal line voltage of 120 volts (60 Hz) because the original light bulb invented by Thomas Edison ran on 110 volts DC, and that approximate voltage was kept even after converting to AC so that it was not necessary to buy new light bulbs. Many frequencies were used in the nineteenth century for various applications, with the most prevalent being the 60 Hz supplied by Westinghouse-designed central stations for incandescent lamps.*

 0163-6804/08/$25.00 © 2008 IEEE

Another issue is that power line cables are a *shared* medium. Thus, they cannot provide links dedicated exclusively to a particular subscriber, as the twisted pair cables used by telephone companies do. More specifically, power line cables connect a low-voltage transformer to a set of individual homes or a set of multiple dwelling units, without isolating each unit. Because power line cables are shared among a set of users, the signals that are generated by one user in one apartment or house may interfere with the signals generated in an adjacent house or apartment. Because it is difficult to locally contain the signals generated by a user, the more users in geographical proximity that use PLC, the more interference is generated. As the interference increases, every user experiences a decrease in data rate because more packet collisions occur. This phenomenon of *network overlap* is not dissimilar to what happens in other, more conventional shared media, for example, coax and wireless. However, coax and wireless devices can count on the availability of a much larger bandwidth than in the case of power lines and therefore, can mitigate the effects of interference by using different communication channels separated in frequency (frequency division multiplexing [FDM]), whereas most broadband PLC devices share the whole frequency band (typically 2–30MHz). This makes the issue of PLC "self-interference" very challenging.

In the past, the aforementioned challenges caused skepticism about the feasibility of broadband communication over power lines. However, now we can say that this skepticism finally has been overcome now that there are products available on the market today for many broadband PLC applications that have PHY data rates of up to 200 Mb/s. The only thing that is currently missing to enable mass-market penetration of PLC products is the availability of an international technical standard issued by a credible and globally recognized standards-setting body.

To overcome this fundamental drawback, in June 2005, twenty companies agreed to form the IEEE P1901 Working Group (WG) under the sponsorship of the IEEE Communications Society (ComSoc) [4]. The scope of the P1901 WG is to develop a standard for high-speed (>100 Mb/s at the PHY layer) communication devices through alternating current electric power lines using frequencies below 100 MHz.

The Progress of the IEEE P1901 Working Group

Since the formation of the WG in June 2005, the interest in PLC technology has grown significantly and the group now includes over 50 entities across the entire PLC value chain [4]. As per the scope of IEEE P1901, the standard will use transmission frequencies below 100 MHz and will be usable by all classes of PLC devices, including devices used for the first-mile/last-mile connection (<1,500 m to the premise) to broadband services, as well as devices used in buildings for local area networks (LANs) and other data distribution (<100 m between devices) applications. The efforts of the P1901 WG are limited to the physical (PHY) layer and the medium access (MAC) sub-layer of the data link layer, as defined by the International Organization for Standardization (ISO) Open Systems Interconnection (OSI) Basic Reference Model.

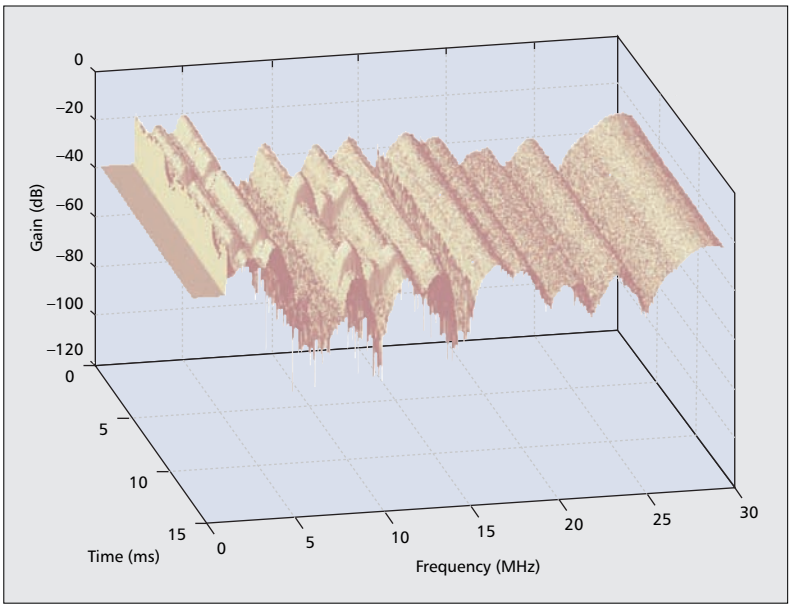

Figure 1. *Measured time variation of an indoor power line channel.*

Defining Functional and Technical Requirements

After formalizing the creation of the group in June 2005, the IEEE P1901 WG adopted a general workflow in November 2005, and a subgroup began to work on developing a set of unified functional and technical requirements (FTRs). With technical assistance from some members of the IEEE ComSoc Technical Committee on Power Line Communications (TC-PLC) [5], channel and noise models, as well as topology descriptions were developed and approved for insertion into an informative annex.

Progress in the following year led to the development of hundreds of FTRs categorized in three separate clusters:

- In-home (IH) — This cluster of requirements is concerned with enabling low-voltage wiring in structures to carry digital content.
- Access (AC) — This cluster is concerned with the transmission of broadband content on the medium- and low-voltage power lines that feed homes.
- Coexistence (CX) — This cluster focuses on requirements that will make PLC devices compatible even if based on different technologies.

The IH FTRs address the use of the power lines in a residence or office as a digital communication medium. The AC cluster contains FTRs for bringing multimedia services to residences via power lines and for developing electric power

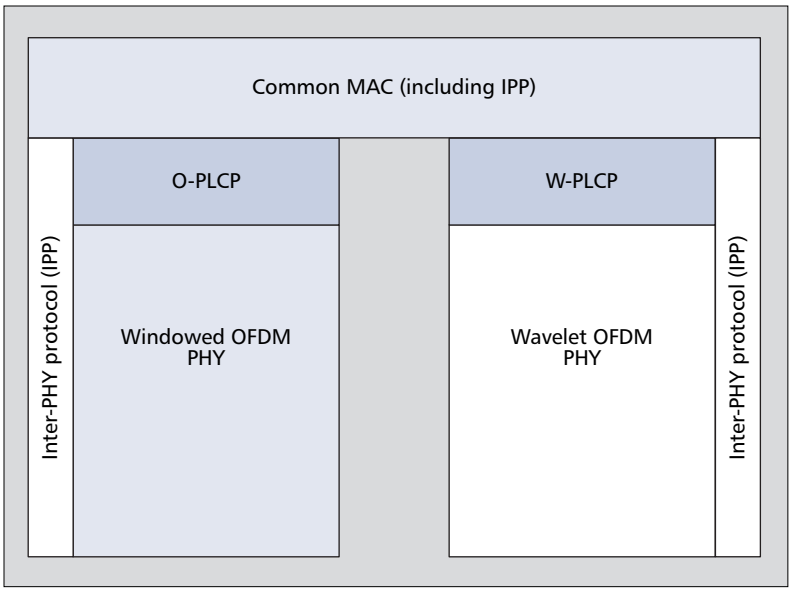

Figure 2. *Architecture of the IEEE P1901 WG proposal currently scheduled for a confirmation vote. Example of functionalities present in each layer. Common MAC: frame formats, addressing, SAP, SAR, security, IPP, channel access, etc. W-PLCP and O-PLCP: channel adaptation, PPDU format, FEC, etc. PHY: wavelet-OFDM PHY, windowed FFT-OFDM PHY.*

utility applications. The CX cluster involves FTRs that govern how non-interoperable devices can share the channel without causing harmful interference to each other. A coexistence protocol is being defined in the CX cluster, and this protocol will define a general resource sharing mechanism that will allow non-IEEE 1901 devices to share the channel with each other and with IEEE 1901 devices. In addition to these three clusters, the IEEE P1901 WG also has begun to extend its efforts to include capabilities for the transportation sector (e.g., airplanes, ships, trains, cars).

Issuing the Call for Proposals

In February 2007, the group approved the set of FTRs defined for the baseline PLC standard and issued a call for proposals to solicit technical solutions for systems that met the approved requirements. In June 2007, a total of twelve proposals were received, four for each cluster. The next step for the IEEE P1901 WG was to select the proposals that best met the requirements defined in each cluster.

Current Status and Next Steps

The IEEE P1901 WG has conducted a series of voting sessions following the agreed-upon down selection process. Moreover, a few voluntarily merged proposals also were submitted. As of April 2008, there is only one surviving technical proposal in each of the three clusters. Currently, these proposals are being refined and improved. The next step for the IEEE P1901 WG is to hold confirmation votes on the surviving proposals. The surviving proposals must achieve a 75 percent majority approval in the confirmation vote to become part of the baseline of the standard. After that, the formal process of creating the Draft Standard from this baseline begins.

Technical Features of the In-Home and Access Proposals Scheduled for the Confirmation Vote

The surviving IH and AC proposals that are scheduled for a confirmation vote offer a solution with a common MAC layer and the flexibility to support two PHY layers; one based on wavelet-orthogonal frequency-division multiplexing (OFDM) [7] and one on windowed fast Fourier transform (FFT)-based OFDM. A conceptual overview of the proposals is shown in Fig. 2. The common MAC layer handles the two different PHY layers via an intermediate layer called the Physical Layer Convergence Protocol (PLCP). There are two PLCPs: the O-PLCP, which handles the interaction between the common MAC and the windowed OFDM PHY and the W-PLCP, which handles the interaction between the common MAC and the wavelet-OFDM PHY. Another key component of the proposal is the presence of a mandatory Inter-PHY Protocol (IPP) that enables PLC devices based on the IEEE 1901 standards to share the medium efficiently and fairly regardless of the PHY differences. The IPP is a new element that is unique to the power line environment because its requirement stems from the issue of self-interference mentioned in the introduction to this article. Because the basic MAC and PHY features contained in the submitted proposals already were published in some form and also are available online in some detail [9, 10], we focus here on the description of some technical characteristics of the IPP.

The Inter-PHY Protocol

A solution based on multiple non-interoperable PHY layers with a common MAC layer is a common approach in standards, for example, 802.11. However, due to the self-interference problems mentioned previously, the definition of two non-interoperable PHY layers also leads to the necessity of handling the case when devices with different PHY layers are in proximity and connected to the same shared medium. The issue of self-interference also is addressed in the proposals for the case where all devices have the same PHY (described as the problem of neighbor networks operation). However, in this case, the solution to the problem is simpler because all devices are interoperable and easily can exchange information. The Inter-PHY Protocol (IPP) is designed to cope specifically with the problem of non-interoperable PHY layers, and its purpose is to enable fair sharing of resources between devices equipped with the IEEE 1901 PHY layers.

In its initial conception, the IPP handled only the two IEEE 1901 PHY layers. However, several members of the IEEE 1901 WG are evaluating the use of the IPP as the mechanism that will regulate the simultaneous access to the power line channel of both IEEE 1901 and future next generation (NG) devices. The NG PHY will be recognized by the IPP as a third PHY that is non-interoperable with either of the two IEEE 1901 PHY layers. Although the very concept of

coexistence becomes moot after the industry aligns behind a common technology, we believe that including the IPP in NG devices is a small price to pay in terms of complexity if a longer product life can be offered to PLC technologies based on the IEEE 1901 standard. An important aspect of the IPP is that it will be compatible with the coexistence proposal being defined in the CX cluster.

The IPP Waveform and the Network Status — IEEE 1901 AC and IH devices will indicate their presence and requirements by transmitting a set of simple IPP signals. The particular IPP waveform included in the AC and IH proposal is based on the commonly distributed coordination function (CDCF) waveform defined in the current proposal submitted to the CX cluster. The CDCF waveform is a baseband windowed OFDM signal lasting around 80 μs. This signal is obtained by the repetition of twelve base signals. Samples of the base signal waveforms can be stored in memory and flushed directly to the D/A, thus allowing simple implementation by either PHY layer. Several phase vectors were defined to create different base signals.

IPP signals will be transmitted in the IPP time-window, a region of time used by PLC devices for transmitting/detecting IPP signals. The IPP time-window occurs periodically every T_{ipp} seconds and is further divided in F time subwindows, called fields. The presence/absence of IPP signals in a field conveys several kinds of information about the presence/absence of a device of a certain kind (AC, IH-OFDM [IH-O], IH-wavelet [IH-W]), bandwidth requirements (low, medium, high), re-synchronization requests, and so on. Each field in the IPP window has a duration of around 250 μs, so there is a margin of around 85 μs at both ends of the IPP field. This allows handling imperfect zero crossing detection, load induced phase shifts of the mains signal, and other nonidealities of the channel. The IPP window occurs every T_{ipp} seconds (allocation period) at a fixed offset T_{off} relative to the underlying line cycle zero crossing. This is shown in Fig. 3. Because there are two zero crossings in a cycle and there are often up to three phases in a building, there are actually six possible zero crossing instances. Proper synchronization techniques also are being defined to allow all devices in range of each other to synchronize to a common zero crossing instance.

When a device starts operating on the power line medium, it first determines the correct location of the IPP window, and then it scans for IPP signals to determine the network status, that is, what type of systems are present on the shared medium, what are their bandwidth requirements, and so on. AC and IH devices indicate their presence, as well as other useful information by transmitting IPP signals in the appropriate IPP fields of the IPP window pertaining to their system. In particular, every system will use in exclusivity an IPP window every T_{ipp} seconds. For example, all IH devices that use the OFDM PHY (IH-O) simultaneously use an IPP window, all AC devices simultaneously use the next IPP window, and then all IH devices that use the wavelet-OFDM PHY (IH-W) simultaneously use the next one, and so on in a round-robin fashion (Fig. 4). This enables all devices to unequivocally determine the network status every $3 \cdot T_{ipp}$ seconds. For example, Fig. 4 shows two cases: a case where all systems are present because IPP signals are transmitted in all three consecutive IPP windows and a case where an AC system is missing because no IPP signal is transmitted during the IPP window allocated to access systems.

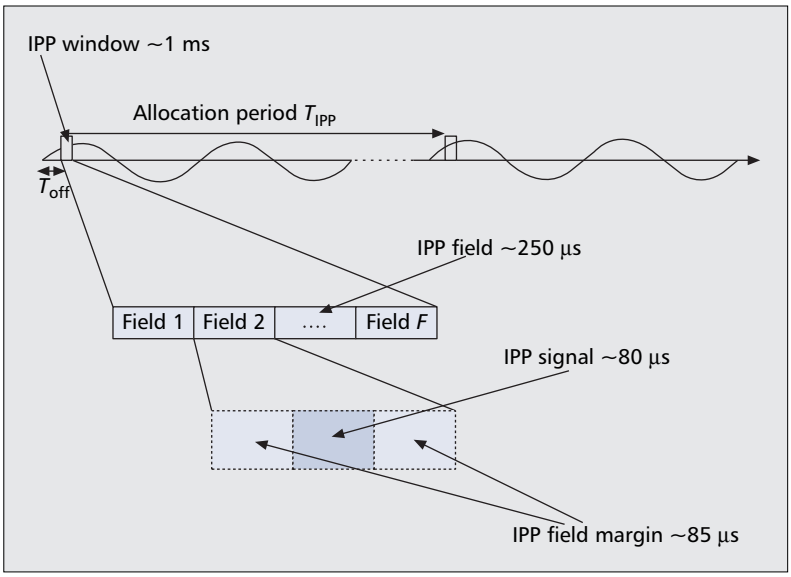

■ **Figure 3.** *IPP time window, IPP fields, IPP field margins, and IPP signal window.*

Support of Dynamic Bandwidth Allocation (DBA) — Depending on the status of the power line network, different resource allocations are carried out. Time division multiple access (TDMA) sharing between wavelet and OFDM systems is based on allocation periods. As shown in Fig. 5a, there are N TDM units (TDMUs) per allocation period, where an allocation period lasts T_{ipp}. The duration of a TDMU is equal to two power line cycles, and each TDMU contains S TDMA time slots. Each TDMA slot is exclusively assigned to either AC, IH-O, or to IH-W systems, and the allocation policy is based on the network status. Fair sharing of resources is accomplished by assigning a fair number of TDMA slots to each system that is present on the power line network. Sensible values for parameters N and S currently under discussion are: $3 \le N \le 10$ and $8 \le S \le 12$ and as a consequence, T_{ipp} has a value of a few hundred milliseconds. An example of three possible TDMA structures is given in Fig. 5b for the case of S = 12 and for three different network statuses. With a period equal to T_{ipp}, devices can update the network status and eventually change the utilized TDMA structure to ensure efficient DBA. The IPP window always occurs at the beginning of TDM unit (TDMU) #0.

The duration of a TDM slot (TDMS) is either 40/S ms (50Hz) or 33.33/S ms (60Hz), and these values are equal to the minimum system latency that can be guaranteed by the network. For example, for the case S = 12, we have 3.33 ms (50Hz) or 2.78ms (60Hz). Similar to the case of

The fundamental architecture used to coordinate the IEEE P1901 network is master/slave. The master (quality of service [QoS] controller) authorizes and authenticates the slave stations in the network and may assign time slots for transmissions using either CSMA-based or TDM-based access.

Figure 4. *Example of determination of network status: (upper) all systems present; (lower) only two systems, no AC system present. Here, only the IPP window is shown, and the time shown on the x-axis is in multiples of the synchronization period* T_{ipp}.

the IPP fields, it is required to add a margin of some microseconds around the TDMS boundaries.

Support of TDMA Slot Reuse Capability — The interference generated on shared power line networks is a random variable that depends on many factors, such as the transmitted power, the power line topology, wiring and grounding practices, the number of mains phases delivered to the premises, and so on. PLC devices can interfere with other devices that are in close proximity, but also with devices that are located farther away, for example, on another floor. In other cases, even within the same apartment, devices can cause very different levels of interference, for example, depending on whether they are located on the same phase of the alternating current mains or not.

Algorithms for TDMA slot reuse (TSR) exploit this physical property of the power line channel by allowing devices, either in the same network or in different neighboring networks, to transmit *simultaneously* without causing interference to each other. Currently, no commercial PLC product has this capability. Usually, within the same network, nodes are either assigned orthogonal resources (e.g., different TDMA slots) or compete for resources (e.g., carrier sense multiple access [CSMA]). Several members of the IEEE 1901 WG are currently defining an efficient TSR algorithm that will be part of the IPP and will allow an increase of the overall network throughput.

The MAC and the Two PLCPs

The fundamental architecture used to coordinate the IEEE P1901 network is master/slave. The master (quality of service [QoS] controller) authorizes and authenticates the slave stations in the network and may assign time slots for transmissions using either CSMA-based or TDM-based access. Network stations can communicate directly with each other (as opposed to an access point that retransmits all traffic). This increases the efficiency of the network and reduces the load on the master.

The MAC layer employs a hybrid access control based on TDMA and CSMA/CA by defining a contention-free period (CFP) and a contention period (CP) to accommodate data with different transmission requirements. The CFP is a portion of the total transmission cycle during which stations that have low-delay/low-jitter requirements are allowed exclusive use of the medium. All streams requiring transmission in the CFP are managed by a QoS controller. The CFP starts with a beacon, which is periodically sent by the QoS controller and ends when all reserved streams are transported. The rest of the beacon cycle is used for CP. In the CFP, data streams that have a time allocated to them through a bandwidth reservation procedure managed by the QoS controller are transported. Frequency division multiplexing (FDM) also can be supported to allow for coexistence between in-home and access networks. Fragmentation support, data bursting, group-acknowledgment (ACK), and selective repeat automatic repeat-reQuest (ARQ) are also important features of the current proposal.

Intelligent TDMA also is defined in the proposal. Intelligent TDMA is a dynamic bandwidth allocation mechanism that exploits information about the amount of traffic queued in each transmission station. This mechanism realizes stable transmission that can cope with errors and Internet Protocol/variable bit rate (IP/VBR) traffic. In each transmitted data packet, each station inserts the number of frames pending to be transmitted. Because traffic information is directly obtained from data packets, the QoS controller can perform accurate real-time operation. An option for line cycle synchronization also is present for coping with the periodically time-varying channel and cyclostationary noise.

The FFT OFDM-Based PHY

FFT-based windowed OFDM is one of the two proposed multichannel transmission techniques. Through the use of time-domain pulse shaping

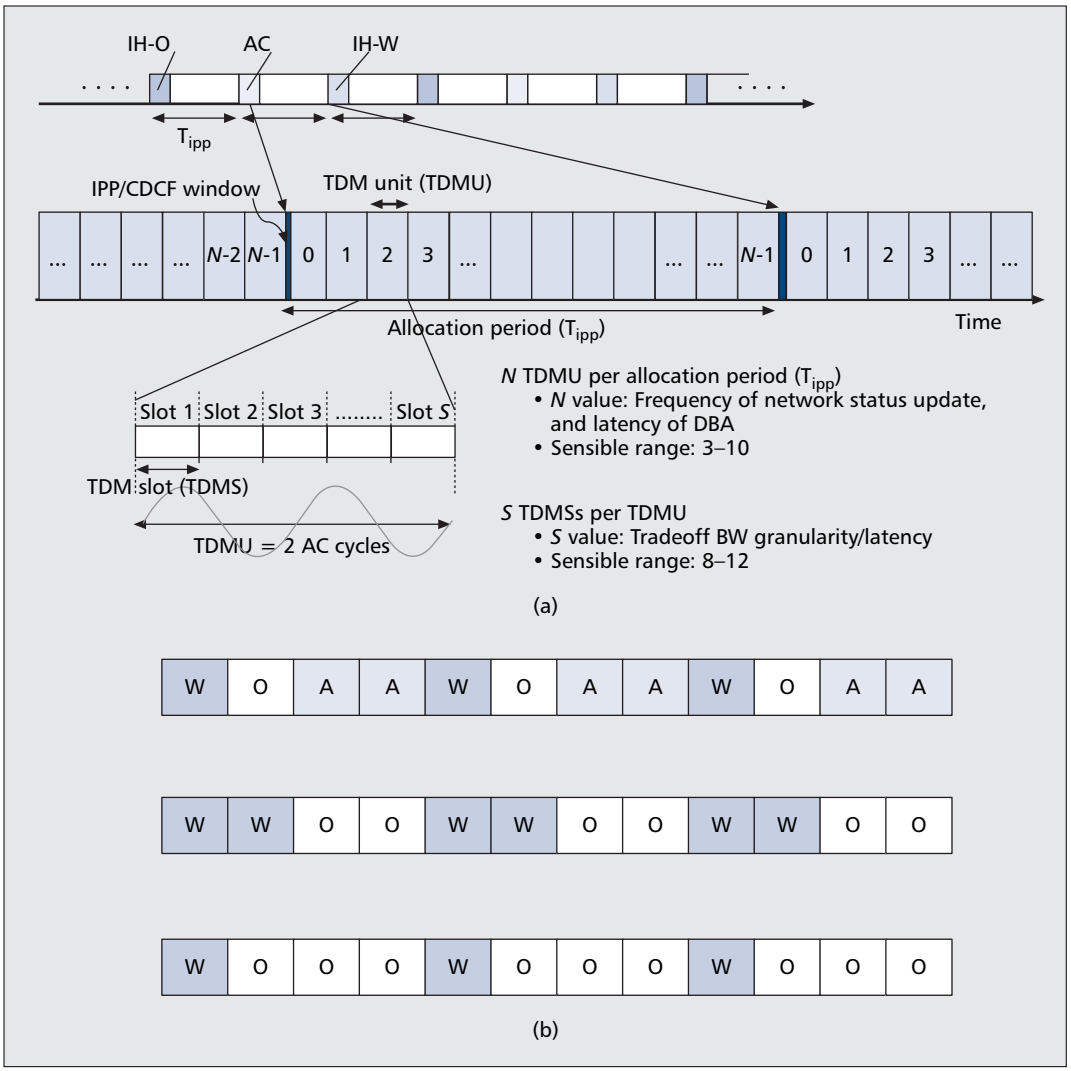

Figure 5. *a) General TDMA structure:* N *TDMUs in an allocation period, and* S *TDM slots per TDMU (a TDMU is two line cycles long); b) example of three possible TDMUs for the case of* S = *12: (upper) the TDMSs are allocated 50 percent to the access system and 50 percent to the in-home systems (25 percent to wavelet-OFDM systems and 25 percent to FFT-OFDM systems); (center) the TDMSs are allocated 50 percent to wavelet-OFDM systems and 50 percent to FFT-OFDM systems since no access system is present; (lower) same as the center case but for a different network status: when wavelet systems require reduced resources in the appropriate IPP field.*

Because traffic information is directly obtained from data packets, the QoS controller can perform accurate real-time operation. An option for line cycle synchronization also is present for coping with the periodically time-varying channel and cyclostationary noise.

of the OFDM symbols, deep frequency notches can be achieved without the additional requirement of transmit notch filters. The proposed OFDM PHY uses a maximum of 1893 carriers in the 1.8 to 48 MHz band for maximum data rates up to 400 Mb/s. Frequencies above 30 MHz are optional and support for up to 80 MHz may be included. Flexible spectral notching can support regional and application requirements. In addition, each OFDM tone can be loaded with 1, 2, 3, 4, 6, 8, or 10 bits using QAM on the basis of the signal to noise ratio (SNR) of each carrier. This PHY uses turbo convolutional coding for forward error correction (FEC). Channel adaptation mechanisms, based on detecting zero crossings and understanding where noise is most likely to occur, also were defined as they significantly improve system performance in the presence of periodically time-varying noise.

The basic parameters of the FFT-OFDM PHY appear in Table 1a.

The Wavelet OFDM-Based PHY

Wavelet-OFDM [7, 8] is the second multichannel transmission technique contained in the current proposal. The fundamental characteristic of wavelet-OFDM is that the usual FFT-based transform and the rectangular/raised-cosine windowing used in conventional OFDM is replaced with critically decimated, perfect reconstruction cosine-modulated filter banks that exhibit several desirable properties such as very low spectral leakage. One of the most interesting aspects of wavelet-OFDM is that it is not necessary to introduce a guard interval between consecutive symbols. An extensive literature exists on wavelet-OFDM; see [6] and the references therein.

The proposed wavelet-OFDM system specified here places 512 evenly spaced carriers into the frequency band from DC to around 30 MHz. Of these 512 carriers, 338 of them (approximate-

ly 2 MHz to 28 MHz) are used to carry information. With the use of an optional band above 30 MHz, data rates on the order of half a Gb/s also can be achieved. Every carrier is loaded with real constellations such as M-PAM (M = 2, 4, 8, 16, 32). It is important to note that although wavelet-OFDM employs real constellations, this does not mean that wavelet-OFDM has lower spectral efficiency than conventional OFDM that employs 2D constellations such as QAM. In fact, the frequency resolution of wavelet-OFDM is twice that of windowed OFDM because the use of non-rectangular windowing allows for a higher degree of spectral overlap. As a consequence, for the same total bandwidth and the same number of transform points K, wavelet-OFDM uses K real carriers that employ PAM, whereas OFDM uses $K/2$ complex carriers that employ QAM. Thus, OFDM and wavelet-OFDM have the same spectral efficiency. Specified FECs include a mandatory concatenated Reed-Solomon/convolutional code scheme and an optional LDPC code that allows easy scalability to high-data rates at reasonable complexity.

The basic parameters of the wavelet-OFDM PHY are shown in Table 1b.

Conclusions

The establishment of the IEEE P1901 WG in June 2005 was a very important step toward the creation of the required conditions for widespread adoption of PLC technology. The existence of a single proposal in each of the three clusters being evaluated by the IEEE P1901 WG also represents a very important step forward for the industry. This is a sign that alignment in the PLC industry is starting and that a global broadband PLC standard for both in-home and access applications is within close reach. Certification of interoperability among IEEE 1901 devices, as well as between future IEEE 1901 devices and some legacy technologies, is out of the scope of the IEEE standard

(a) FFT-OFDM PHY	
Communication method	Fast Fourier transform (FFT) OFDM
FFT points	3072, 6144
Sampling frequency (MHz), respectively	75, 150
Symbol length (μs)	40.96
Guard interval (μs)	Variable according to line conditions: 5.56, 7.56, 47.12
Primary modulation (per subcarrier)	BPSK, QPSK, 8-, 16-, 64-, 256-, 1024-, and 4096-QAM
Frequency band (MHz)	2–30 (optional bands: 2–48 and 2–60)
Error correction	Turbo convolutional coding
Maximum transmission speed (Mb/s)	545 (8/9 CTC)
Diversity modes	Normal ROBO, mini ROBO, high-speed ROBO, and frame control
(b) Wavelet-OFDM PHY	
Communication method	Wavelet OFDM
Discrete wavelet transform points	512, 1024
Sampling frequency (MHz)	62.5, 125
Symbol length (μs)	8.192
Guard interval	Not necessary¨
Primary modulation (per subcarrier)	BPSK, 4-, 8-, 16-, 32-PAM
Frequency band (MHz)	2–28 (optional band: 2–60)
Error correction	RS, RS-CC; LDPC (optional)
Maximum transmission speed (Mb/s) (2–60 MHz band and FEC)	544 (239/255 RS)
Diversity modes	MAC header, TMI/FL, payload

Table 1. *Basic PHY parameters.*

but is within the scope of specific industry associations such as the HomePlug Alliance [9], the Consumer Electronics Powerline Communications Alliance [6], and the High Definition Power Line Communication (HD-PLC) Alliance [8]. Additionally, the current approach for the IPP design allows a solid path for compatibility with future NG technologies. These efforts give current users of PLC technology a solid roadmap to the future and pave the way for the unification and rapid growth of the PLC industry.

We also wish to point out that the PLC industry was fortunate in having the IEEE Communications Society as its standards project sponsor. In fact, standards cannot develop and flourish in a vacuum, and it is fundamentally important to provide the required nourishing "humus" to enable the beneficial effects of standardization to thrive. The IEEE Communications Society has been fostering technical innovation in the area of communication systems for several decades and has always ensured the availability of a reservoir of diverse intellectual and technical talent, as well as the availability of forums where academic and industrial researchers could share and debate their findings. In the past few years, the IEEE Communications Society has fostered the creation of the IEEE Technical Committee on Power Line Communications [5], has ensured the publication of important special issues on PLC in leading peer-reviewed IEEE journals [10, 11], and has provided the financial support and technical sponsorship for the major conference in the area of PLC: the IEEE International Symposium on Power Line Communications and Its Applications (ISPLC) [12]. Because of these efforts, the IEEE Communications Society has had a primary role in enabling the topic of PLC to gain increasing visibility across the scientific and industrial communities. All these components will contribute substantially to the technical quality of the standard that will be chosen by the IEEE P1901 WG and ultimately, to the success of PLC technology.

The IEEE Communications Society has been fostering technical innovation in the area of communication systems for several decades and has always ensured the availability of a reservoir of diverse intellectual and technical talent.

Acknowledgments

The authors wish to express their gratitude to the reviewers, as well as to the many people in the PLC community for providing their valuable contribution and feedback. A special thanks to Merav Ben-Elia, Shmuel Goldfisher (MainNet Communications), Jim Allen, Jim Reeber, and Bo Zhang (Arkados).

Disclaimer

Because work is still underway for the standard, it is not possible to divulge details about the technical proposals submitted by the members of the IEEE 1901 WG that are accessible solely to members of the WG. All the information disclosed here about the activities and the goals of the IEEE P1901 WG is public information and can be found either in official IEEE P1901 WG press releases, on the IEEE P1901 WG homepage [4], or already was divulged in public presentations. Moreover, the points of view expressed here are solely those of the authors, and in no way is it implied here that these points of view also are shared or supported by the IEEE P1901 WG.

References

[1] K. Dostert, *Powerline Communications*, Prentice-Hall, 2001.
[2] E. Biglieri, "Coding and Modulation for a Horrible Channel," *IEEE Commun. Mag.*, vol. 31, no. 5, May 2003.
[3] T. E. Sung, A. Scaglione, and S. Galli, "Time-Varying Power Line Block Transmission Models over Doubly Selective Channels," *IEEE Int'l. Symp. Power Line Commun.*, Jeju Island, Korea, Apr. 2_4, 2008.
[4] IEEE P1901, "Draft Standard for Broadband over Power Line Networks: Medium Access Control and Physical Layer Specifications"; http://grouper.ieee.org/groups/1901/index.html
[5] IEEE ComSoc Technical Committee on Power Line Communications; http://www.comsoc.org/bopl/
[6] Consumer Electronics Powerline Communication Alliance (CEPCA); http://www.cepca.org/home
[7] S. Galli, H. Koga, and N. Kodama, "Advanced Signal Processing for PLCs: Wavelet-OFDM," *IEEE Int'l. Symp. Power Line Communications*, Jeju Island, Korea, Apr. 2–4, 2008.
[8] High Definition Power Line Communication (HD-PLC), HD-PLC Alliance; http://www.hd-plc.org/
[9] The HomePlug Powerline Alliance; http://www.homeplug.org
[10] S. Galli, A. Scaglione, and K. Dostert, guest editorial for the feature topic on "Broadband is Power: Internet Access Through the Power Line Network," *IEEE Commun. Mag.*, vol. 31, no. 5, May 2003.
[11] E. Biglieri *et al.*, Guest Editorial for the special issue on "Power Line Communications," *IEEE JSAC*, vol. 24, no. 7, July 2006.
[12] ISPLC; http://www.isplc.org/

Biographies

STEFANO GALLI [S'95, M'98, SM'05] (sgalli@research.panasonic.com) received his M.S. and Ph.D. in electrical engineering from the University of Rome La Sapienza, Italy, in 1994 and 1998, respectively. He is currently lead scientist in the Strategic R&D Planning Office of Panasonic, San Jose, California, where he works on several projects in communications and networking. His research efforts are devoted to various aspects of xDSL systems, wireless/wired home networks, wireless communications, optical CDMA, and power line communications. His research interests also include detection and estimation, communications theory, and signal processing. He was a teaching assistant in signal theory in the Info-Com Department of the University of Rome from 1996 to 1998 and a senior scientist at Bellcore from 1998 to 2006. He was elected to the position of member-at-large of the Board of Governors and will serve for the term 2008–2010. Currently, he also serves as Chair of the Communications and Signal Processing Technical Committee Cluster and the Technical Committee on Power Line Communications. He served as General Chair, and Technical Program Committee Chair and member of numerous conferences, has served as Guest Editor for special issues of *IEEE Communications Magazine* and *IEEE JSAC*, and he also served as Associate Editor for *IEEE Signal Processing Letters* (2005–2007). He is a reviewer for several journals and conferences, has published over 90 papers, and holds five internationally issued patents and several pending ones.

OLEG LOGVINOV holds a Master's degree in electrical engineering from the Technical University of Ukraine. He is chief strategy officer and immediate past president of the HomePlug Powerline Alliance. He has served as president and CEO of Arkados since spring 2004. Prior to that, from February 2000 to March 2004, he served as vice president of engineering and later as president of Enikia LLC. From March 1998 to February 2000 he served as senior director of product development and system engineering at OpenCon Systems Inc., a telecommunications software service provider, and later CyberPath Inc., a venture-funded VoDSL gateway company spun off by OpenCon Systems Inc. Prior to that, he held senior management positions at NITECH, Inc. from1996 to 1998 and CEM, Inc. from 1991 to 1996. He has also worked as a senior research scientist and later research team leader at an R&D laboratory at the Technical University of Ukraine and the Ukraine Department of Energy. He holds several patents and is a frequent industry speaker, representing both the HomePlug Alliance and Arkados at conferences around the world.

ACCEPTED FROM OPEN CALL

G.hn: The New ITU-T Home Networking Standard

Vladimir Oksman, Infineon Technologies
Stefano Galli, Panasonic Corporation

ABSTRACT

Several wired in-home networking technologies are currently available to consumers, although most of them were designed to cope with only one type of home wiring and are not interoperable with each other. In 2006 ITU-T started a standardization project called G.hn for a unified next generation networking technology, operating over all types of in-home wiring (phone line, power line, coaxial cable, and Cat-5 cable). ITU-T Recommendation G.9960, consented in December 2008, is the G.hn foundation: it specifies network architecture, most of the PHY, and some aspects of the MAC. The complete Recommendation is expected within 2009. Besides residential premises, G.hn is intended for small/home offices and public places such as multiple dwelling units, hotels, and conference rooms. This article gives an overview of G.hn technology focusing on the main principles used to build a single transmission scheme for multiple types of wires.

INTRODUCTION

Home networking (HN) technologies [1] were first introduced in the late 1990s to provide standard Ethernet connections in a residence without rewiring the house with Cat-5 cable. Today several HN technologies are available to the consumer; of them wireless local area networks (WLANs) based on the IEEE 802.11 standard are the most popular. However, WLANs often suffer from poor radio frequency (RF) propagation, especially in multiple dwelling units (MDUs) with concrete walls, and from mutual interference that limits their capability to provide high-speed services with strict quality of service (QoS) requirements for applications such as high definition video streaming. Since these applications are of top priority to users, wired connections came back into focus, which in turn led to intensive development of high-speed HN technologies over in-home (IH) power lines, phone lines, and coax cables.

Unfortunately, the wired HN market today is fragmented among multiple technologies using different types of IH wiring. Three industrial solution consortia for power lines mainly share the market: High-Definition Power Line Communication (HD-PLC) Alliance [2], the HomePlug Powerline Alliance (HPA) [3], and the Universal Powerline Association (UPA) [4]. The HN technology defined by International Telecommunication Union — Telecommunication Standardization Sector (ITU-T) Recommendation G.9954 is deployed over phone and coax wiring, and another HN-over-coax technology developed by the Multimedia over Coax Alliance (MoCA) is also widely deployed in the United States [5]. Overall, there are at least three power line technologies, two phone line technologies, and two technologies over coax. Since these technologies do not interoperate, the situation is very inconvenient for consumers, consumer electronics (CE) companies, and service providers (SPs). Consumer confusion alone usually leads to higher return rates, which is a multibillion dollar problem for CE companies.

In 2005 the IEEE P1901 Working Group initiated the unification of power line technologies with the goal of developing a standard for high-speed (> 100 Mb/s) communication devices using frequencies below 100 MHz and addressing both IH and access applications [6]. A baseline of the standard passed a confirmation vote in December 2008 and includes a fast Fourier transform orthogonal frequency-division multiplex (FFT-OFDM) based physical layer (PHY)/media access control (MAC), a wavelet-OFDM based PHY/MAC, and a G.hn compatible PHY/MAC.

In 2006 the ITU-T started the G.hn project with a goal of developing a worldwide Recommendation for a next generation unified HN transceiver capable of operating over IH phone lines, power lines, coax, and Cat-5 cables and bit rates up to 1 Gb/s. In December 2008 ITU-T consented on Recommendation G.9960, which is the G.hn foundation and specifies system architecture, most of the PHY and parts of the MAC. The technology targets residential houses and public places, such as small home and offices, MDUs, and hotels. G.hn does not address powerline communications (PLC) access; however, coexistence mechanisms with access systems, as well as with P1901, and provisioning for smart grid applications are currently under study.

G.hn allows up to 250 nodes operating in the network. It defines several *profiles* to address applications with significantly different implementation complexity. High-profile devices, such as residential gateways, are capable of providing very high throughput and sophisticated management functions. Low-profile devices, such as home automa-

 0163-6804/09/$25.00 © 2009 IEEE

tion, have low throughput and basic management functions but can interoperate with higher profiles.

The G.hn initiative is supported by the HomeGrid Forum [7], whose main goal is to ensure the business and marketing success of G.hn, similar to how the Broadband Forum supports ITU-T developments in DSL and the Wi-Fi Alliance supports IEEE 802.11. HomeGrid was launched on April 29, 2008 with Panasonic, Infineon, Texas Instruments, and Intel on its board. The HomeGrid Forum recently started the development of a Testing and Interoperability certification program.

The Rationale Behind G.hn

Past approaches emphasized transceiver optimization for a *single* medium only (i.e., for either power lines, phone lines, or coax cables). The approach chosen for G.hn is a single transceiver optimized for multiple media. Thus, G.hn transceivers are parameterized so that relevant parameters can be set depending on the wiring type. For example, a basic multicarrier scheme based on windowed OFDM has been chosen for all media, but some OFDM parameters, such as number of subcarriers and subcarrier spacing, are media-dependent. Similarly, a three-section preamble is defined for all media, but durations of these sections change on a per media basis. A quasi-cyclic low-density parity check (QC-LDPC) code has been chosen for forward error correction (FEC), but a particular set of coding rates and block sizes are defined for each type of media. A parameterized approach also allows to some extent optimization on a per media basis to address the different channel characteristics of IH wires without sacrificing modularity, flexibility, and cost.

There are several advantages in pursuing a single unified HN technology:

- *Interoperability*: A single solution for all types of media ensures interoperability and simplifies coexistence with neighboring networks.
- *Consolidation of the markets*: Reduces market fragmentation and enables the industry to align behind a unified HN standard.
- *Market development*: Develops the market of HN devices by providing a worldwide standard addressing all regionally specific requirements.
- *Cost reduction*: Drives cost down by high volume due to unified single solution with few configurable parameters suitable for all media and regions.
- *Convenience*: A single worldwide technology is simpler for the user than multiple technologies with different installation and operation rules.
- *Performance*: The next-generation HN solution offers higher performance, meeting both the CE and SP requirements at competitive cost and complexity.

Major components of performance improvement are wider frequency bandwidth and higher modulation efficiency, which brings the raw bit rate to 1 Gb/s. The advanced FEC scheme, combined with flexible bit loading and enhanced by efficient retransmission techniques, provides high robustness even over extremely noisy media like power lines. The retransmission protocol is parameterized to meet the particular medium; for example, frequent retransmissions are expected in power lines, but are very rare in coax. MAC efficiency is significantly improved by robust collision avoidance techniques combined with packet aggregation. This combination ensures higher coverage within a home.

G.hn Network Architecture

Overview

A G.hn network consists of one or more domains. In G.hn a domain is constituted by all nodes that can directly communicate, interfere, or both with each other. Thus, there is no interference between different domains of the same network, except crosstalk between closely routed wires. One of the nodes is a domain master (DM). It controls operation of all nodes in the domain, including admission to the domain, bandwidth reservation, resignation, and other management operations. In case a DM fails, the DM function is passed to another node in the domain.

Since all nodes of the network that can communicate or directly interfere with each other are in the same domain, the DM can avoid interference between nodes by coordinating their transmission time. This is simpler and more efficient than coordinating transmissions in several domains sharing the medium. The latter is still necessary when the medium is shared between neighboring networks, such as in many deployments over power lines. The user can also establish multiple domains on the same medium, e.g., by enabling baseband and passband modes on power lines or using different RF channels on coax.

Domains of the same network are connected by interdomain bridges (Fig. 1). This allows nodes of any domain to *see* any other node of any other domain in the network. Any domain may also be bridged to wireline or wireless alien networks (e.g., DSL, PLC access, WLAN, other HN technologies).

An example of residential HN is presented in Fig. 2. The network includes three domains: over coax, phone line, and power line, each controlled by its DM. Alien networks are WLAN, USB2, Ethernet, and residential access network. A residential gateway bridges power line and coax domains and bridges the G.hn network to alien networks. Each G.hn node is configured to operate over the medium to which it is connected, and it can communicate directly with any other node of its own domain and, via interdomain bridges, with nodes of other domains. Communications with nodes of alien networks, including the broadband access network, are through the residential gateway.

Nodes in a domain can communicate with other nodes directly or through one dedicated relay node called the domain access point (centralized mode), or both directly and through one or more relays. Nodes that are hidden from the DM are coordinated via a DM-proxy node assigned by the DM. Mutually hidden nodes can communicate via relays; the maximum number of hops is still under study.

Finally, G.hn also envisions multiport devices communicating over multiple media via separate ports. Since any device would be anyway plugged in a power outlet, designing a dual-port device

The G.hn initiative is supported by the HomeGrid Forum [7], whose main goal is to ensure the business and marketing success of G.hn, similar to how the Broadband Forum supports ITU-T developments in DSL and the Wi-Fi Alliance supports IEEE 802.11. HomeGrid was launched on April 29, 2008 with Panasonic, Infineon, Texas Instruments, and Intel on its board.

Multi-port capability can increase data rate and coverage as data traffic may be split between media. From the application viewpoint, a multi-port device appears as a single entity while handling of network traffic over the available physical ports is done at the LLC layer.

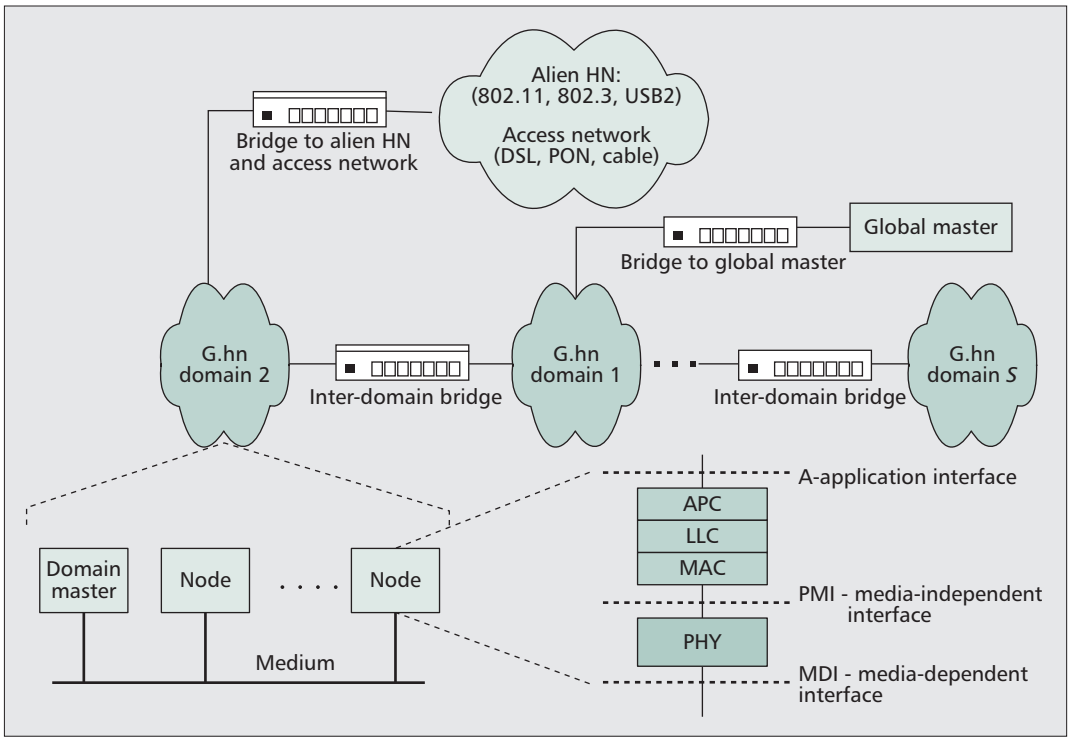

Figure 1. *G.hn network model, domain structure, and protocol reference model of a node.*

(e.g., power line plus coax) appears to be a natural extension of a power line connection. Multi-port capability can increase data rate and coverage as data traffic may be split between media. From the application viewpoint, a multi-port device appears as a single entity while handling of network traffic over the available physical ports is done at the logical link control (LLC) sublayer.

Coordination between Domains

Domains of the same network may require mutual coordination to avoid excessive crosstalk from one to another (e.g., the power line domain often influences the phone line domain), when more than one domain is established on the medium in the same frequency band (this exceptional situation may happen if no other frequency band is available), or for performance optimization of connections routed via multiple domains. Coordination between domains is the responsibility of the global master (GM) (Fig. 1). The GM collects statistics from domains and external management entities, derives appropriate parameters for each domain (transmit power, timing, bandplan, etc.), and communicates them to the DMs of the coordinated domains. Each DM imposes these parameters on all nodes of its domain.

Coexistence with Other Networks

When multiple networks share the same medium and frequency band, it is desirable to limit their mutual interference so that they can operate simultaneously with limited performance degradation. This is provided by coexistence mechanisms. G.hn facilitates coexistence in the same residence or office:

- With neighboring G.hn networks by mutual coordination of transmissions and resource sharing.
- With alien IH and access networks supporting the Inter-System Protocol (ISP), a simple coexistence mechanism currently under development in IEEE P1901 and ITU-T [6, 8].
- With alien IH and access networks not supporting ISP via PSD shaping or subcarrier masking, up-shifting of the spectrum to the passband or to a different RF channel (Fig. 3). Additionally, a dual-mode device operating simultaneously as a G.hn and an alien node can facilitate coexistence by coordinating G.hn networks with non-ISP neighboring alien networks (e.g., HomePlug AV, HD-PLC, UPA).
- With coax RF systems via a frequency agility mechanism: once an alien RF signal is detected, the DM will move all nodes to another RF channel.
- With radio services by avoiding frequencies allocated to international amateur radio bands and switching off or reducing power of all interfering subcarriers.

Details of coexistence protocols, including resource sharing policies, are currently under study.

Overview of the PHY

G.hn has adopted windowed OFDM with the following programmable set of parameters to address different types of wiring:

- Number of subcarriers, $N = 2^n$, $n = 8$–12
- Subcarrier spacing, $F_{SC} = 2^k \times 24.4140625$ kHz, $k = 0, 1, \ldots, 4$
- Center frequency F_C
- Window size

The values of media-dependent parameters are selected taking into account the following considerations:

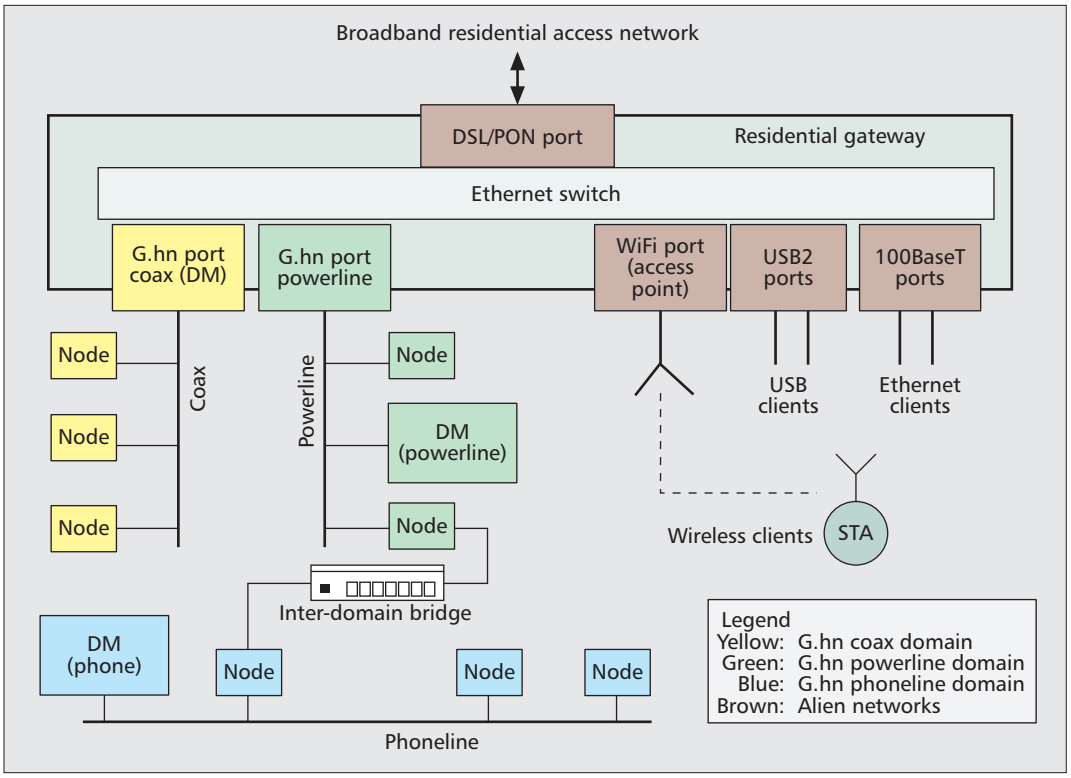

Figure 2. *Example of HN topology associated with residential access.*

G.hn defines baseband bandplans, passband bandplans, and RF bandplans. For each particular medium and bandplan, G.hn defines only a single set of OFDM parameters so that overlapping bandplans use the same sub-carrier spacing. This rule, plus a unified per medium default preamble structure and PHY frame header, facilitates interoperability.

- Subcarrier spacing is selected based on channel characteristics.
- Modulator design is significantly simpler if:
  - –All values for the subcarrier spacing (F_{SC}) are a power-of-two multiples of a basic spacing.
  - –All values for the number of subcarriers (N) are a power-of-two.
  - –All values of sampling frequency are dividers of a common reference frequency.
- Same values of subcarrier spacing and sampling frequency as used by legacy technologies simplify implementation of dual mode devices (e.g., G.hn/HomePlug).

OFDM Parameters and Bandplans

G.hn defines baseband bandplans, passband bandplans, and RF bandplans (Fig. 3). For each particular medium and bandplan, G.hn defines only a single set of OFDM parameters so that overlapping bandplans use the same sub-carrier spacing. This rule, plus a unified per medium default preamble structure and PHY frame header, facilitates interoperability. The number of subcarriers used in each bandplan depends on the media and varies from 256 to 4096 (Fig. 3). There are also eight selectable values for the payload cyclic prefix (CP) length: $k \cdot N/32$, k = 1, 2, …, 8. To address operation in baseband, passband, and RF, G.hn uses a passband OFDM modulator concatenated with an RF modulator. The passband part includes inverse discrete Fourier transform (IDFT), CP, windowing, and frequency up-shift. For baseband operation, the frequency up-shift, F_{US}, is set to the middle of the bandwidth (to a subcarrier with index $N/2$). The RF modulator further up-shifts the spectrum to the RF band, between 0.3 and 2.5 GHz.

It may seem surprising that a scalable OFDM solution where the number of carriers is always a power-of-two can be optimal for all three media, despite coax, phone lines, and power lines having different characteristics. Here we report for the first time that the root mean square delay spreads (RMS-DSs)[1] of the three IH channels are multiples of each other by a factor that is very close to a power-of-two. Since the RMS-DS of a channel is the key metric for optimizing the CP length and the number of OFDM carriers [9], it naturally descends that a power-of-two scalable OFDM solution is appropriate on all three types of IH wiring.

Figure 5 shows a scatter plot of RMS-DSs and average channel gains for all three IH wirings; trend lines are calculated using a robust iteratively reweighted least squares algorithm. The data points in Fig. 5 are taken from measurements (for power line channel) and simulations (for phone line and coax channels), and they all refer to a 50 MHz bandplan. It is interesting to verify that the ratios of the power line channel trend line slope to the slopes of the other two media are close to a power of two: ~2 for the power line/phone line case and ~6 for the power line/coax case. This confirms that a power-of-two rule holds for a wide range of channel gains and RMS-DS.

For an OFDM system that ensures both reliability and high coverage in a wide variability of homes, intersymbol interference mitigation parameters should be chosen based on the 99 percent worst case observed RMS-DS. The 99 percent worst case RMS-DSs of the three IH channels are here listed (see also [9] for more details on the power line channel case):

[1] *The definition adopted here for RMS-DS is the second central moment of the channel impulse response [9].*

After a year long debate on the advanced coding scheme to be selected, a QC-LDPC code was chosen as the mandatory FEC scheme. The selected codes are a subset of the QC-LDPC codes defined in the IEEE 802.16e (WiMAX) with five code rates (1/2, 2/3, 5/6, 16/18, and 20/21) and two block sizes of 120 and 540 bytes.

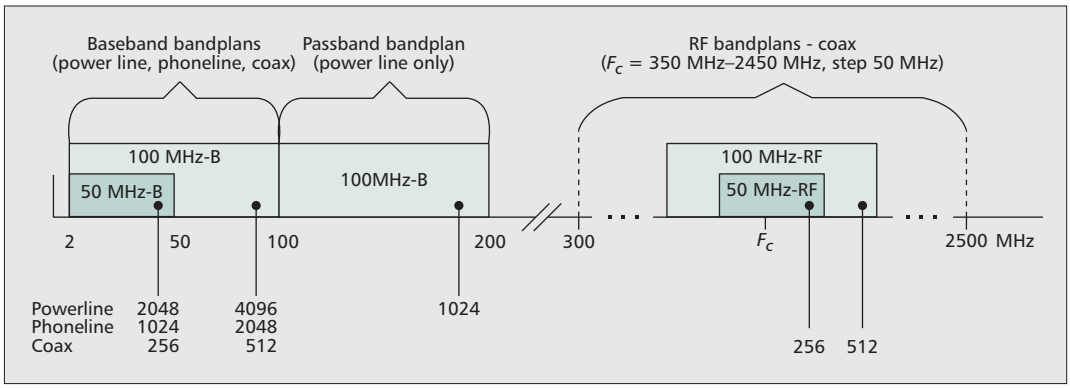

Figure 3. *G.hn bandplans used for different media (the number of subcarriers for each bandplan is shown at the bottom of the figure).*

- Power line: 1.75 μs
- Phone line: 0.39 μs
- Coax: 46 ns

The ratios of the power line 99 percent worst case RMS-DS to that of phone lines and that of coax cables are very close to a power-of-two and are equal to 1.75/0.39 ~ 4.5 and 1.75/0.046 ~ 38, respectively. Since the number of carriers in a given bandwidth determines the OFDM symbol duration, and symbol duration is chosen based on RMS-DS, it is easy to recognize that the *minimum* numbers of carriers can be chosen to be a power-of-two. If allowed by computational complexity and memory constraints, one can further increase the minimum number of carriers for higher transmission efficiency. In G.hn this has been done for the coax and phone line cases because they require fewer carriers than the power line case.

G.hn defines flexible bit loading in the range between 1 and 12 bits on all subcarriers. Gray-mapping is used for all constellation points of even-bit loadings and for almost all constellation points of odd-bit loadings. The bit loading for each connection can be negotiated between the transmitter and receiver, providing sufficient flexibility to adopt channels with wide ranges of frequency responses and noise PSDs.

Advanced FEC Based on QC-LDPC Codes

After a year long debate on the advanced coding scheme to be selected, a QC-LDPC code was chosen as the mandatory FEC scheme. The consented codes are a subset of the QC-LDPC codes defined in the IEEE 802.16e (WiMAX) standard with five code rates (1/2, 2/3, 5/6, 16/18, and 20/21) and two block sizes of 120 and 540 bytes. Three parity check matrices are used for code rates 1/2, 2/3, and 5/6, whereas the other two high code rates are obtained by puncturing the rate 5/6 code. The range of FEC parameters together with bit loading capabilities are designed to fit the retransmission scheme: for media with frequent retransmissions, such as the power line, bit loading and FEC can be optimized to operate at block error rates (BLERs) up to 10^{-2}, while for media with rare retransmissions the optimization can target operation with very low BLER (e.g., at 10^{-8}).

Decoding of LDPC codes is based on the Belief-Propagation Algorithm (BPA) and its variations. Of particular interest in high throughput applications like G.hn is *layered* BPA decoding because convergence is achieved twice as fast as with conventional BPA, resulting in double throughput for the same complexity [10, Sec. III.B]. Layered decoding is already included in some reported implementations of the WiMAX LDPC codes; for example, a fully compliant decoder performing 10–15 layered iterations, achieving throughputs up to 619 Mb/s, and having an area of only 3.83 mm^2 (TSMC 0.13 μm) was recently reported in [11]. These implementations are also geared toward ensuring maximum flexibility rather than optimality for a reduced set of settings: WiMAX can support up to 19 block sizes by six parity check matrices, while for G.hn only two block sizes and three parity check matrices are defined. Once G.hn is finalized, low-complexity implementations optimized for the reduced set of modes will certainly emerge.

Although it is generally accepted that the error floor in convolutional turbo codes (CTCs) makes them suboptimal for very benign media like coax where the BLER operating point is around 10^{-6}–10^{-8}, it has been argued that CTCs could offer much better performance than LDPC codes at high BLERs and should be the code of choice for harsh environments like power lines. However, the QC-LDPC performance curves in Fig. 6 show very good performances at all BLER operating points for the considered coding rates. The figure compares the performance over additive white Gaussian noise (AWGN) of the chosen QC-LDPC code and of the Duo-Binary CTC (DB-CTC) proposed in G.hn as an alternative for two operating scenarios. These simulation results confirm that the G.hn QC-LDPC codes are the best choice for a 1 Gb/s technology intended for multiple media and supporting a wide variety of applications since they offer substantial gains over DB-CTC at low BLERs, and also offer the same or better coding gain at BLERs above 10^{-3}. Finally, we point out that the QC-LDPC simulations in Fig. 6 were obtained using a conventional BPA decoder with no layering, so similar performances could have been obtained by a layered LDPC decoder operating with around half the iterations [10].

These results are also in line with the findings of these European WINNER project where it has been pointed out that for a target BLER of

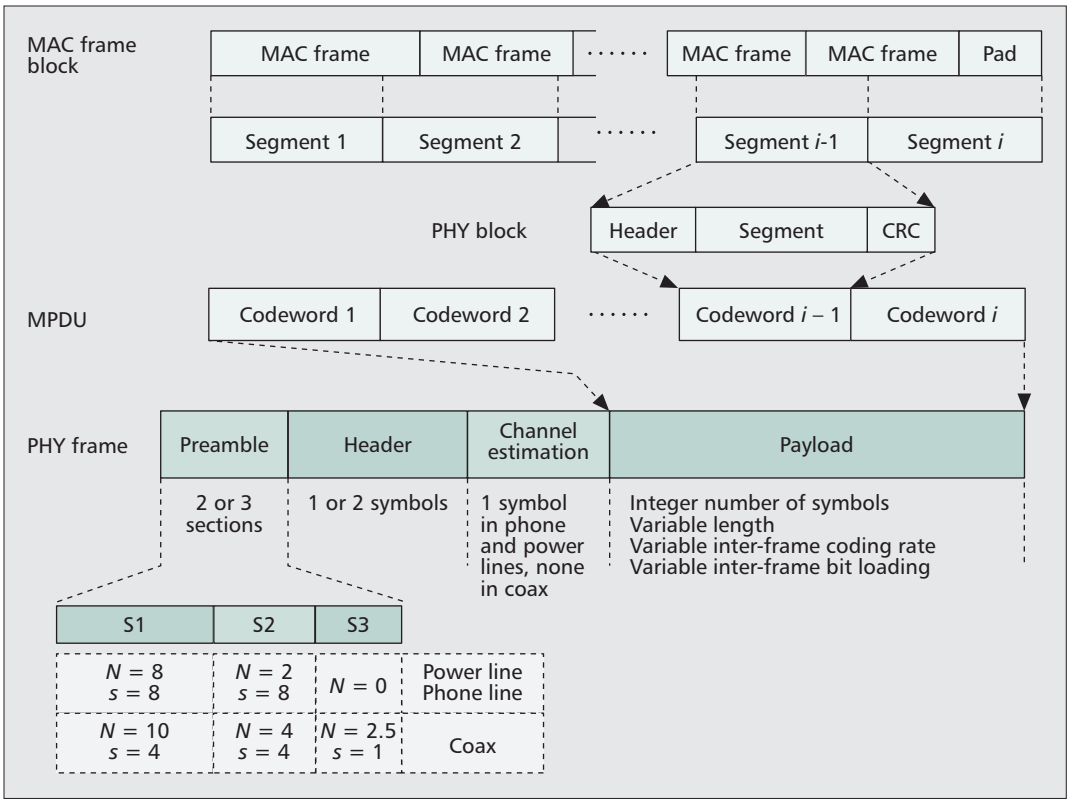

Figure 4. *Format of the transmission frame.*

The header carries settings of all programmable parameters related to the payload, such as guard interval, bit loading, and FEC parameters. The parameters of the header are unified per medium to ensure interoperability and selected to allow reliable detection of the header over noisy channels even without preliminary channel estimation.

10^{-2} (the target often used in power line communications) DB-CTCs gain around 0.2 dB over QC-LDPC codes for block sizes up to 2000 bits, while QC-LDPCs gain around 0.1 dB over DB-CTCs for block sizes above 2000 bits [10]. At higher code rates the size threshold where QC-LDPCs perform better decreases; for example, for the coding rate of 3/4 the critical block size is around 1000 bits [10]. Finally, the choice made in G.hn is also in line with the latest trend in standardization that seems to prefer LDPC codes over CTCs for high data rate applications such as 10G-Ethernet and 802.11n.

The Frame

A transmit frame (PHY frame) consists of a preamble, header, and payload (Fig. 4). The preamble is composed of sections S_1–S_3, each consisting of N_S symbols. Symbols of section S_2 are inverted relative to symbols of S_1, forming a reference point to detect the start of the received frame. Windowing is applied at the edges of each section for spectrum compatibility.

The header carries settings of all programmable parameters related to the payload, such as guard interval, bit loading, and FEC parameters. The parameters of the header are unified per medium to ensure interoperability and selected to allow reliable detection of the header over noisy channels even without preliminary channel estimation. The payload includes one or more FEC codewords. Each codeword carries a segment of the transmitted data, a header identifying the carried segment, and the CRC to detect errored codewords for selective retransmission.

Overview of the Data Link Layer

Media Access Methods

G.hn defines *synchronized* media access (i.e., transmissions in the domain are coordinated by the DM and synchronized with the MAC cycle). The MAC cycle, in turn, can be synchronized with the mains — to cope with periodically time-varying behavior of channel response and noise caused by electrical devices and appliances plugged into the power line.[2] Each MAC cycle is divided into time intervals associated with transmission opportunities (TXOPs) assigned by the DM for nodes in the domain. The DM assigns at least one TXOP to transmit the media access plan (MAP) frame, which describes the boundaries of the TXOPs assigned for one or several following MAC cycles. The latter protects against MAP erasures by impulse noise. Other TXOPs are assigned by the DM to nodes requesting to transmit application data (e.g., video services, data services, voice over IP [VoIP]). All nodes in the domain synchronize with the MAC cycle, read and interpret the MAP, and transmit only during the TXOPs assigned for them by the DM. Thus, collisions can be avoided for particular connections. The DM sets the order, type, and duration of TXOPs based on requests from nodes and available bandwidth; the schedule can change from one MAC cycle to another due to variations in medium characteristics or user application, or when the number of nodes in the domain changes.

To address different applications, three types of TXOP are defined:

- *Contention-free TXOP* (CFTXOP) implements pure time-division medium access

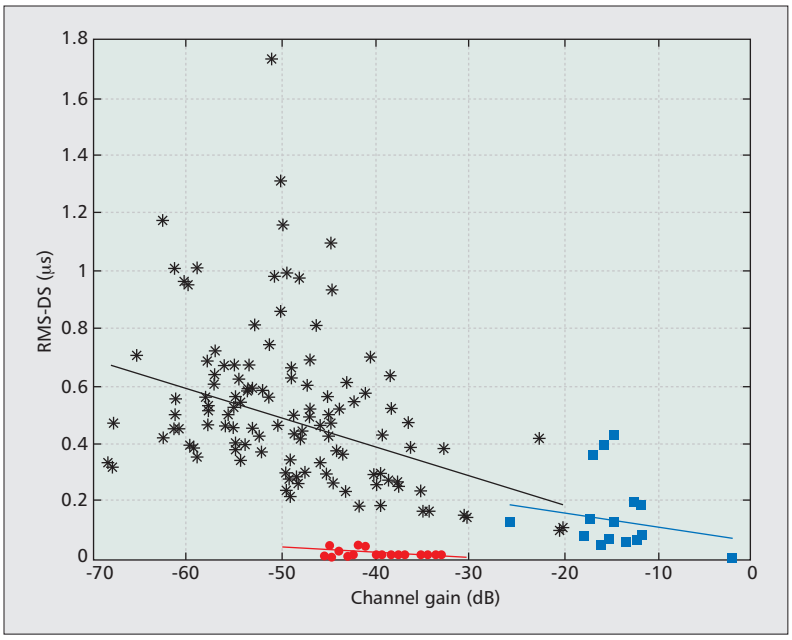

Figure 5. *Scatter plot of measured and simulated data with least squares fitted trend lines: data points refer to power line channels (black stars), phone line channels (blue squares), and coax channels (red circles). The slopes trend lines are –0.01 μs/dB, –0.0051 μs/dB, and –1.6 ns/dB for the power line, phone line, and coax, respectively.*

(TDMA): only one node can transmit during this TXOP — targets services with fixed bandwidth and strict QoS (e.g., video).

- *Shared TXOP with managed time slots* (STXOP) implements managed carrier-sense medium access with collision avoidance (CSMA/CA), similar to ITU-T G.9954 — beneficial for services with flexible bandwidth where QoS is an issue (e.g., VoIP, games, interactive video).
- *Contention-based TXOP* (CBTXOP) is a shared TXOP, in which assigned nodes may contend for transmission based on frame priority, similar to HomePlug AV [3] — generally, for best effort services with several priority levels.

An STXOP is divided into a number of short time slots (TSs). Each TS is assigned for a particular node to transmit a frame with a particular priority. If a node assigned to the TS has a frame of the assigned priority ready, it transmits it; otherwise, it skips the TS and passes the transmission opportunity to the node/priority assigned for the next TS. The node assigned to transmit in the next TS monitors the medium (by carrier sensing) and waits until there is no activity in the medium. Thus, despite STXOP being shared between several nodes, no collision occurs if carrier sensing is sufficiently reliable.

Transmission during CBTXOP is arranged by contention periods. At the beginning of a contention period, each contending node indicates the priority of the frame it intends to send using priority signaling (PRS). PRS selects nodes with frames of highest priority: only these nodes are allowed to contend, while all others back off to the next contention period. The probability of collision between the selected nodes is reduced by a random pick of the particular transmission slot inside the contention window. From the beginning of the window, all selected nodes monitor the medium (by carrier sensing). If the medium is inactive at the slot picked by the node, the node transmits its frame; otherwise, it backs off to the next contention period.

To facilitate virtual carrier sensing, every frame indicates its duration in the frame header. Also, request-to-send (RTS) and clear-to-send (CTS) messages, similar to IEEE 802.11, are defined to reduce time loss in case of collision and improve operation in the presence of hidden nodes.

Security

Since G.hn is intended to operate over shared media, such as power line and coax, its threat model includes two kinds of threats: external and internal. In both cases the goal is to protect against attackers with reasonably powerful computing resources but no access inside operating nodes.

External threat implies an attacker capable of eavesdropping on transmissions and sending frames within the network, but with out-of-network access credentials. Internal threat is from a legitimate user of the network who has an illegitimate interest in the communications of another user or access to a specific network client. In case of hidden nodes, communications between two particular nodes may pass through a relay node, causing a *man-in-the-middle* threat.

Concerning external threats, G.hn defines an authentication procedure based on the Diffie-Hellman algorithm and the Counter with Cipher Block Chaining-Message Authentication Code algorithm (CCM), which uses AES-128. Against internal threats, typical for public installations, G.hn defines pair-wise security: a unique encryption key is assigned to each pair of communicating nodes and is unknown to all other nodes. Pair-wise security maintains confidentiality between users within the network and builds another layer of protection against an intruder that has broken through the network admission control. The expected grade of security in G.hn is the same as or stronger than that defined in the most recent specification for WLAN IEEE 802.11n.

Conclusions

The G.hn standard is a worldwide HN Recommendation: its main body specifies characteristics that are common for all regions while normative regional annexes address specifics of different regions. It ensures full interoperability between nodes, independent of the wiring type and the region in which they are manufactured or initially intended to be used.

G.hn targets next generation HN technology, able to operate over all types of in-home wiring using a single transceiver with few programmable parameters. It offers a solution for public and private installations. This makes G.hn an appealing solution to both SP and CE industries; it paves the way for the worldwide success of wired HN. The support of the HomeGrid Forum [7] and Broadband Forum substantially contributes to the success of G.hn.

G.hn is expected to outperform current HN technologies due to wider bandwidth (up to 100 MHz), advanced FEC, flexible modulation with up to 12 bits/subcarrier, and an efficient media access

[2] *The input impedance and injected noise of household electrical devices often depends on the instantaneous amplitude of the AC mains voltage, which causes a periodically time-varying channel response and periodically time-varying noise.*

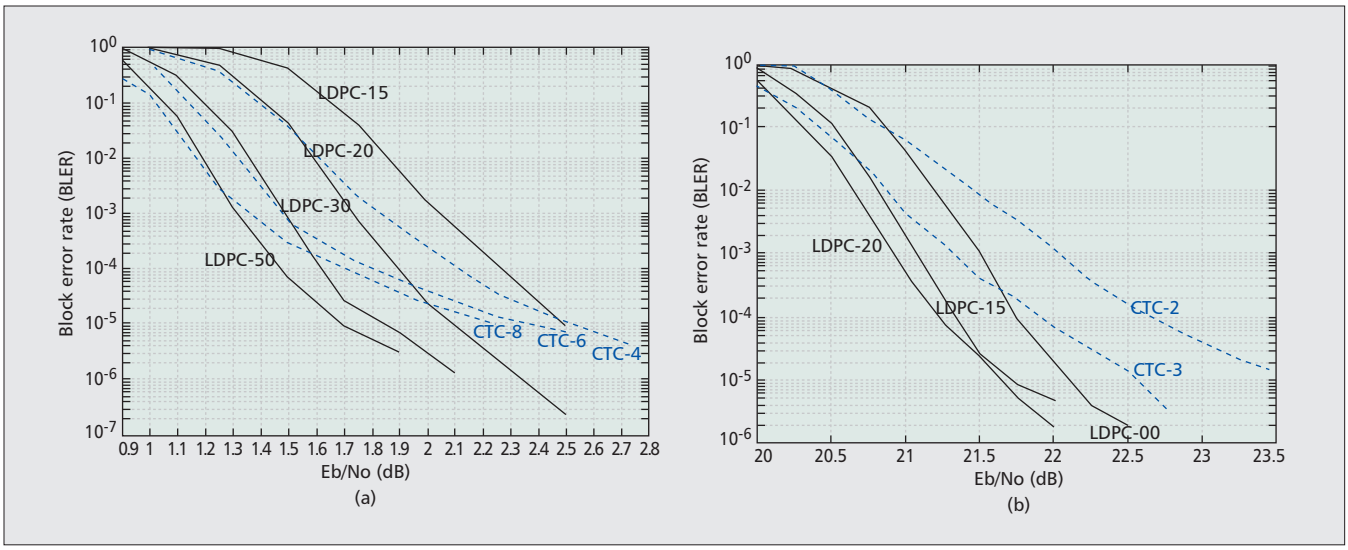

Figure 6. *Performance over AWGN of the G.hn QC-LDPC FEC scheme (black solid) and of the DB-CTC FEC scheme (blue dashed) proposed as an alternative. Information block size is 540 bytes for the QC-LDPC code and 520 bytes for the DB-CTC. The decoder iterations shown are for a QC-LDPC sum-product decoder with flooding scheduling (no layering) and for a DB-CTC Log-MAP decoder. a) Bad channel case (low SNR and low data rate): rate 1/2 with QPSK on all subcarriers; b) good channel case (high SNR, high data rate): rate 16/18 with 1024-QAM on all subcarriers.*

method. In suitable medium conditions G.hn can reach a raw bit rate of 1 Gb/s. Spectrum utilization is improved by multiple bandplans in both the baseband and passband. Furthermore, G.hn defines a full set of capabilities that facilitate coexistence with neighboring G.hn and non-G.hn networks, with systems utilizing amateur radio bands, and with PLC and DSL access systems.

Acknowledgment

The authors wish to thank Alberto Jiménez Feltström of Design of Systems on Silicon (DS2) for providing us with the FEC simulation results shown in Fig. 6.

References

[1] W. Y. Chen, *Home Networking Basis: Transmission Environments and Wired/Wireless Protocols*, Prentice Hall, 2003.
[2] The HD-PLC Alliance; http://www.hd-plc.org/
[3] The HomePlug Powerline Alliance; http://www.homeplug.org
[4] The Universal Powerline Association; http://www.upaplc.org
[5] Multimedia over Coax Alliance; http://www.mocalliance.org/
[6] S. Galli and O. Logvinov, "Recent Developments in the Standardization of Power Line Communications within the IEEE," *IEEE Commun. Mag.*, vol. 46, no. 7, July 2008.
[7] The HomeGrid Forum; http://www.homegridforum.org
[8] S. Galli, A. Kurobe, and M. Ohura, "The Inter-PHY Protocol (IPP): A Simple Co-Existence Protocol," *IEEE ISPLC*, Dresden, Germany, Mar. 29–Apr. 1, 2009.
[9] S. Galli, "A Simplified Model for the Indoor Power Line Channel," *IEEE ISPLC*, Dresden, Germany, Mar. 29–Apr. 1, 2009.
[10] T. Lestable *et al.*, "Block-LDPC Codes vs. Duo-Binary Turbo-Codes for European Next Generation Wireless Systems," *IEEE VTC-Fall*, Sept. 25–28, 2006.
[11] T. Brack *et al.*, "A Synthesizable IP Core for WIMAX 802.16e LDPC Code Decoding," *Proc. IEEE PIMRC '06*, Helsinki, Finland, Sept. 2006.

Biographies

STEFANO GALLI [SM] (sgalli@research.panasonic.com, sgalli@ieee.org) received his M.S. and Ph.D. degrees in electrical engineering from the University of Rome "La Sapienza," Italy, in 1994 and 1998, respectively. Since 2006 he is Lead Scientist in the Strategic R&D Planning Office of Panasonic, San Jose, California, where he works on several projects in communications and networking. Prior to this position, he was a teaching assistant in Signal and Systems at the InfoCom Department of the University of Rome from 1996 to 1998, and a Senior Scientist in Bellcore (now Telcordia Technologies) from 1998 to 2006. He has been elected to the position of Member-at-Large of the Board of Governors of the IEEE Communications Society, and will serve for the term 2008–2010. He is also currently serving as Chair of the IEEE Technical Committee on Power Line Communications, as a member of the IEEE Journals Board, and as Co-Chair of the Communications Technology Task Force of the IEEE P2030 Smart Grid Standard. He has served as Technical Program Committee member and General Co-Chair of numerous conferences. He served as a Guest Editor for special issues in *IEEE Communications Magazine* and *IEEE Journal on Selected Areas in Communications*, as an Associate Editor for *IEEE Signal Processing Letters* 2005–2007, and is now an Associate Editor for *IEEE Communications Letters*. His research efforts are devoted to various aspects of xDSL systems, wireless/wired home networks, wireless communications, optical CDMA, power line communications, and Smart Grid related topics. His research interests also include detection and estimation, communications theory, and signal processing. He is a reviewer for several journals and conferences, has published around 90 papers, and holds 6 international issued patents and several pending ones.

VLADIMIR OKSMAN (vladimir.oksman@infineon.com) received his M.S. and Ph.D. degrees from the Leningrad Radio and Telecommunication State College, USSR, in 1976 and 1987, respectively. Since 2003 he is director of technical marketing at Infineon Technologies. He worked at the Research Institute of Long Distance Communication, USSR, from 1976 to 1990 focusing on different aspects of digital transmission systems for symmetric and coaxial cables. Between 1991 and 1997 he worked for Tadiran Ltd., Israel, as a project manager on early HDSL systems and a technical advisor on xDSL technologies. In 1997 he joined the J. J. Werner research group at Bell Labs to work on the first VDSL project, and continued his work on single-carrier and multicarrier VDSL at Broadcom Corporation as a principal scientist. He actively participated in the development of emerging DSL technologies in European, North American, and international standards organizations. He is a reviewer for several journals and conferences, a co-author of four technical books, has published around 10 papers, and holds four patents. His recent efforts are mainly devoted to the development of ultra-high-speed vectored DSL systems and novel home networking technologies.

The Inter-PHY Protocol (IPP): A Simple Coexistence Protocol for Shared Media

Stefano Galli (*), Akio Kurobe (**), Masato Ohura (**)
(*) Panasonic Corporation, 550 S. Winchester Blvd., San Jose, 95128 CA, USA
(**) Panasonic Corporation, 1006 Kadoma-shi, 571-8501, Osaka, Japan

***Abstract* – The power line (PL) is a shared medium, so that PL devices deployed on the same PL network must share the available capacity. Since there are today several incompatible technologies in the market and no available standard, it is expected that these different technologies will continue to be deployed for some time thus giving rise to the necessity of adopting coexistence mechanisms, i.e. mechanisms allowing non-interoperable devices to efficiently share channel resources. This problem has seldom been addressed in the literature and the goal of this contribution is to fill this gap. A simple coexistence mechanism is here presented and its performances assessed via simulations. A particular version of this algorithm has been proposed to the IEEE P1901 and to the ITU-T SG15/Q4 G.9960 (G.hn) Working Groups.**

I. Introduction

Broadband Power Line Communications (PLC) connectivity to and within the home has been available to consumers for some time through various technologies. The most important barrier to the widespread adoption of broadband PLC is the current lack of an international technical standard issued by a credible and globally recognized standards-setting body. Due to the lack of standards and the shared nature of the PL channel, coexistence among non-interoperable devices over the power line (PL) medium becomes necessary. In fact, since PL cables are *shared* among a set of users, the signals that are generated by one user in one apartment or house may interfere with the signals generated in an adjacent house or apartment. Since it is difficult to contain locally the signals generated by a user, the more users in geographical proximity that use PLC the more interference will be generated.

The topic of coexistence between PLC devices has been very rarely addressed in the technical literature [1]-[3], although the *Consumer Electronics Powerline Alliance* (CEPCA) [4] has been developing together with the *Universal Powerline Alliance* (UPA) [5] a general coexistence mechanism (CXP) that was also proposed to the IEEE P1901 WG [6]. The Inter-PHY Protocol (IPP) presented here can be made compatible with the CXP solution developed by CEPCA/UPA with an appropriate choice of parameters, but it is simpler and also allows PL devices to perform Time Reuse (TR). TR is the capability of nodes to detect when it is possible to transmit simultaneously to other nodes in neighboring systems, without causing harmful interference. If all nodes use the same technology, then mechanisms exploiting management frame exchange between nodes can be devised for coping with the throughput reduction due to high node density [7]. The problem is more challenging when nodes in interference range are not interoperable. This problem is addressed in this paper.

Although, in its original conception, IPP was designed to enable fair resource sharing between devices equipped with either of the two PHYs proposed to IEEE P1901 WG [6], IPP is also an excellent candidate for a mechanism that will regulate simultaneous access of both current and Next Generation (NG) devices to the PL channel. Additionally, IPP could also serve as the mechanism that ensures coexistence between Access (AC), Smart Grid (SG) and In-Home (IH) technologies. It is very important to provide coexistence means between AC/SG and IH technologies since the former have traditionally a much longer obsolescence horizon than the latter.

With the increasingly important role played by domestic energy measurement and control within the power utility industry, it is likely that the number of homes fitted with energy metering and control devices that utilize power line AC or SG technology will dramatically increase over the next few years. Similarly, the growing demand for broadband connectivity within the home is pushing IH technology towards higher and higher speeds and it would not be reasonable to expect future NG IH devices to maintain interoperability with previously deployed AC/SG devices. Adoption of IPP in current and future devices will enable continued and efficient operation of legacy devices in the presence of newly deployed NG IH devices and allow for a smooth transition between legacy and new products.

II. IPP Overview

A. CDCF Waveform

Since we are considering the case of PLC networks where nodes may be non-interoperable, we need to define a set of simple signals that can be easily transmitted and detected by any node regardless of its native PHY. These simple signals will constitute the common "alphabet" shared by the non-interoperable devices. The waveform chose for this purpose is based on the Commonly Distributed Coordination Function (CDCF) signal originally designed by CEPCA and UPA. The CDCF signal is obtained by the repetition of R baseband windowed OFDM signals.

Each OFDM symbol, formed by a set of all 'one' BPSK data, is modulated onto the carrier waveforms using a 512-point Inverse Fast Fourier Transform (IFFT). The CDCF signal is defined below ($1 \le n \le 512 \cdot R$):

$$S_I(n) = N_C \cdot W(n) \cdot \sum_{C_a} \cos\left(\frac{2 \cdot \pi \cdot C_a \cdot n}{512} + \Phi(C_a) \right)$$

where N_c is a normalization factor, $W(n)$ is a windowing function, C_a is the carrier index, $\Phi(C_a)$ is a binary $\{0, \pi\}$

phase vector. Some of the carriers used in the above equation can be masked in order to meet the Transmit Spectrum Mask. Additional carriers may be masked by the equipments depending on local regulations. Samples of the base signal waveforms can be stored in memory and flushed directly to the DAC, thus allowing simple implementation by any PHY.

Several phase vectors can be defined to create a set base signals, i.e. the common alphabet shared by all nodes. By defining multiple phase vectors, we can create a set of CDCF signals and this set will constitute the common "alphabet" shared by all the non-interoperable devices. An obvious trade off with complexity arises when defining the cardinality of the set of CDCF signals belonging to the alphabet. However, the goal of IPP is to be as low complexity as possible so that the design choice is not to define a large alphabet of CDCF signals for data communication between non-interoperable devices but to define a sufficient number of CDCF signals for facilitating the detection of the network status (as discussed in Sect. II.B). For example, for the IPP proposed to the IEEE P1901 WG, only four phase vectors have been defined.

An example of a CDCF signal is given in Figure 1. In the example, the sampling frequency *Fs* is 100 MHz, the repetitions is *R*=16, and of the first and last two symbols are windowed to reduce the out-of-band energy in order to be compliant with the transmit spectrum mask.

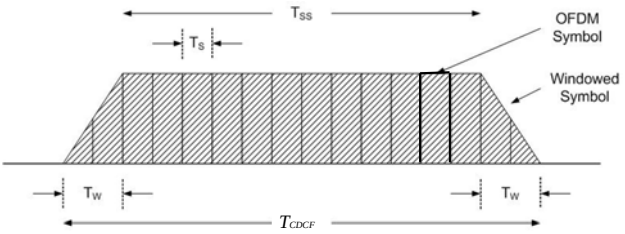

Symbol	Description	Time Samples	Time (us)
T_s	IFFT interval	512	5.12
T_{ss}	OFDM symbols duration	6144	61.44
T_w	Windowing duration	1024	10.24
T_{CDCF}	CDCF signal interval	8192	81.92

Figure 1: Example of CDCF signal.

The CDCF signal allows robust detection in several cases: when the received signal is the superposition of multiple temporally shifted CDCF signals with same phase vector; when the multiple received CDCF signals have been transmitted over different channel realizations, and when the multiple transmitters and the receiver have different phase masks. This robustness allows multiple PLC devices to transmit *simultaneously* the CDCF signal without degrading the detection capabilities of the receiver and, moreover, without the need of perfect synchronization.

At the receiver side, first a 512-point FFT is performed, then carrier phases are rotated using the set of available phase vectors, and finally the correlation between adjacent carriers is calculated to make the decision on what phase vector was transmitted. The inter-carrier correlation $ICC(n)$ is defined as ($1 \le n \le R$):

$$ICC(n) = \sum_{k=1}^{511} \chi\left(d(n,k+1)d^*(n,k)\right)$$

where $d(n,k)$ is the received complex value after FFT, n is the OFDM symbol number, k is the OFDM carrier number, and $\chi(\cdot)$ is a hard limiting function that is equal to 0 or 1 depending on whether its argument is below or above a certain threshold.

Detection performance is shown in Figure 2, where the bandwidth is [2-38] MHz, *Fs*=100 MHz, R=12, and HAM notches are on. It is useful to transmit the CDCF signal at several dB lower than normal communication. This is done for two main reasons. As explained later, all devices with the same native PHY will transmit the CDCF signal simultaneously so that transmitted power reduction will allow radiated emission compliance. Secondly, detection of the CDCF is very accurate and can be achieved even at negative SNRs thus leading to an overestimation of the interference capability of a neighboring node. Since CDCF detection means that a neighboring device is in interference range and thus channel resources must be shared, it is important to make sure that the CDCF is not detected when neighboring devices cause only limited interference. Besides lower the transmit power, it is also useful to introduce some power control techniques as mentioned in [7].

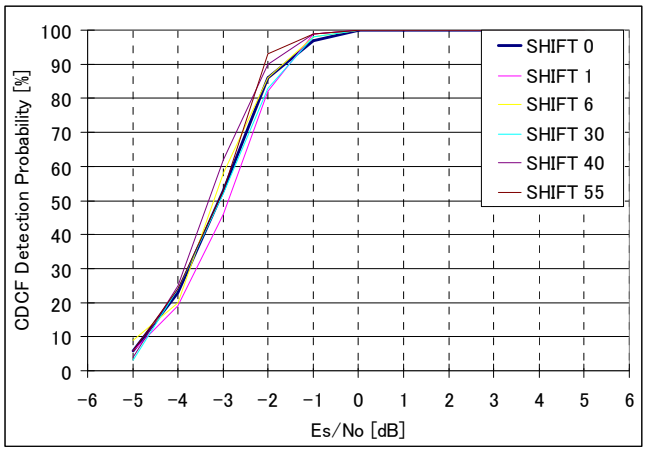

Figure 2: Detection algorithm performance of the CDCF signal when two temporally shifted versions of the CDCF are received.

B. Network Status (NS)

Let us assume that on the PL network there are *D* devices belonging to *K* different types of PLC technology, where $D=D_1+D_2+\ldots+D_K$ and D_i is the number of interoperable devices of the *i*-th type (i=1, 2, …K). All D_i devices of type *i* will indicate their presence and requirements by transmitting simultaneously the CDCF waveform with an appropriate phase vector and in an appropriate time window (the CDCF window). The CDCF window occurs periodically every Synchronization Period (SP), as shown in Figure 3. At the next SP, all D_{i+1} devices of type (i+1) will indicate their presence and requirements by transmitting simultaneously the CDCF waveform with another phase vector, and so on in a round robin fashion. Therefore, every system will use in exclusivity a CDCF window every T_{ipp} seconds. For example, assuming K=2, all D_1 interoperable devices that use PHY-A transmit simultaneously during the first CDCF window, all D_2 interoperable devices that use PHY-B transmit simultaneously during the second CDCF window, and then

again PHY-A devices transmit again during the following CDCF window.

The CDCF window is divided into F time sub-windows called fields. The presence/absence of IPP signals in a field of the i-th CDCF window conveys information about the presence/absence of a device of type i, its bandwidth requirements (low, medium, high), re-synchronization requests, etc. Each field in the CDCF window has duration of around $3 \cdot T_{CDCF}$, which includes a left and a right margin of silence of duration T_{CDCF}. This allows handling imperfect zero crossing detection, load induced phase shifts of the mains signal, and other non idealities of the channel. A CDCF window occurs every Synchronization Period (SP) at a fixed offset T_{off} relative to the line cycle zero crossing.

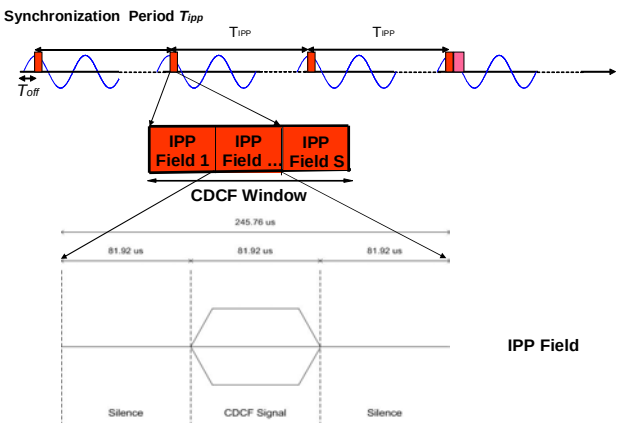

Figure 3: CDCF window, IPP fields, and margins.

When a device starts operating on the PL medium, it will first determine the correct location of the CDCF window scanning for CDCF signals, it will synchronize its own CDCF window with the detected one, and it will determine the NS, i.e., what type of systems are present on the shared medium, what their bandwidth requirements are, etc. It is important to realize that the concept of NS in the IPP is a "per node" concept and not a "per system" concept. This means that two different nodes belonging to the same PLC system may indeed sense different NSs and, therefore, resource allocation associated to these two nodes will be different. This is the obvious consequence of the *locality* of interference since not all nodes in a system will be in interference range of all other systems. This will exploited for achieving TR gains.

Finally, we also point put that there are two zero crossings in a mains cycle and there are often up to three phases in a building, so that there are actually six possible zero crossings instances. Proper synchronization techniques must also be defined to allow all devices in range of each other to synchronize to a common zero crossing instant but, for the sake of brevity, these techniques are not reported here.

C. *Dynamic Resource Allocation*

Depending on the status of the power line network, different resource allocations will be carried out. TDMA sharing between the K non-interoperable systems will be based on Synchronization Periods (SPs). As shown in Figure 4, there are N TDM Units (TDMUs) per SP, where a SP lasts T_{ipp} seconds. The duration of a TDMU can be chosen freely, but it is convenient to choose it as an integer multiple of the mains cycle. For example, for the IPP version proposed to the IEEE P1901 WG, it has been chosen to set the TDMU to two mains power cycles, i.e. 40 ms (50 Hz) or 33.3 ms (60 Hz). Each TDMU contains S TDMA time slots (TDMS) and each TDMS will be exclusively assigned to all nodes of one of the K non-interoperable system, and the allocation policy is based on the network status.

There are several policy choices for assigning TDMSs to the systems on the PL. For example, fair sharing of resources can be accomplished by assigning a fair number of TDMS to each system that is present on the PL network. Assigning up to 50% of resources to AC/SG devices and the remaining 50% to all IH systems is another possible choice [6].

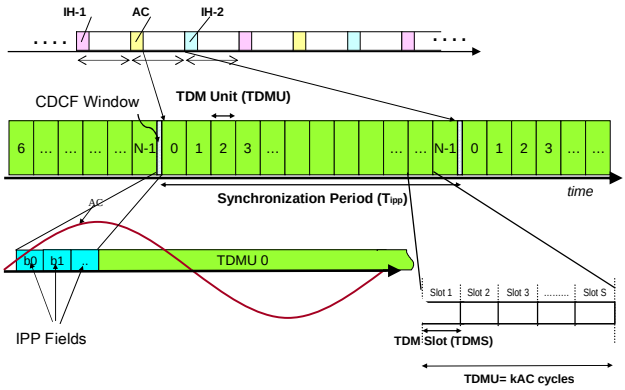

Figure 4: General TDMA structure: N TDMUs in a SP, and S TDMSs per TDMU. The CDCF window always occurs at the start of TDMU #0.

Sensible values for parameters N and S are: $3 \leq N \leq 10$, and $8 \leq S \leq 12$ and, as a consequence, T_{ipp} has a value of few hundred milliseconds. With a period equal to $K \cdot T_{ipp}$, devices can unambiguously determine the NS while with a period equal to T_{ipp} devices can update the NS and eventually change the utilized TDMA structure to ensure efficient dynamic resource allocation.

An example of a possible set of TDMA patterns is given in Figure 5 for the case of S=10 TDMSs, K=3 non-interoperable systems A, B, and C, and a "quasi-fair" sharing policy. Whenever system C is present, it takes 40% (4 TDMSs) of resources whereas the other two systems A and B always share the available remaining resources. Obviously, if only one system is present all resources are taken by that system.

	A	B	C	1	2	3	4	5	6	7	8	9	10
TDMA Pattern 1	1	1	1	A	B	C	C	A	B	C	C	A	B
TDMA Pattern 2	1	1	0	A	B	B	A	A	B	B	A	A	B
TDMA Pattern 3	1	0	1	A	A	C	C	A	A	C	C	A	A
TDMA Pattern 4	0	1	1	B	B	C	C	B	B	C	C	B	B
TDMA Pattern 5	1	0	0	A	A	A	A	A	A	A	A	A	A
TDMA Pattern 6	0	1	0	B	B	B	B	B	B	B	B	B	B
TDMA Pattern 7	0	0	1	C	C	C	C	C	C	C	C	C	C

Figure 5: Example of TDMA patterns.

As shown in the example, the NS (the number and type of systems sharing the PL network) determines the TDMA pattern used by all nodes that share the same NS. The

function that associates a NS to a specific TDMA allocation is a surjective and monodromous function. There are several design criteria for obtaining good patterns but they are here omitted for the sake of brevity.

We conclude the sub-section mentioning that, among the F IPP fields, it is convenient that the first one $\{b_0\}$ is the field denoting presence/absence of a system; the other fields can be used to signal full or reduced resource requirements, FDM mode request from AC nodes, re-synchronization needs, etc.

III. Time Re-Use Algorithm

The interference generated on shared PL networks is a random variable that depends on many factors, such as the transmitted power, the PL topology, wiring and grounding practices, the number of mains phases delivered to the premises, etc. PLC devices can interfere with other devices that are in close proximity, but also with devices that are located farther away, e.g., on another floor. If K non-interoperable systems operate on the same PL network, fair sharing would require that channel resources are divided equally so that each system would have access only to a fraction $1/K$ of the total network capacity C. Since the concept of NS is a "per node" concept, nodes belonging to the same type of system may sense a different NS and use different TDMA patterns so that some nodes may have access to a capacity in excess of the statutorily available one C/K. The goal of a TRA is to devise when a node can have access to that excess capacity. TRA can also be designed to alleviate the problem of throughput degradation in dense PL networks even when all nodes are interoperable; this problem is addressed in [7].

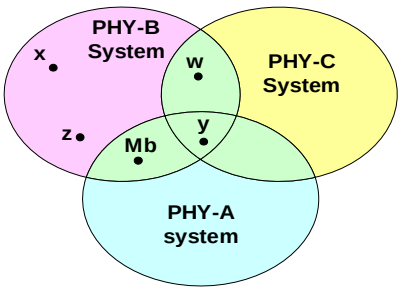

Figure 6: Example of PL network with K=3 non interoperable systems.

When all the D_i nodes of the i-th system transmit the CDCF signal, all nodes of the other (K-1) systems will be in scan mode to detect CDCF signals present in the i-th CDCF window to update their NS estimate. A convenient way of representing the NS is given by the Interference Index vector (IIV), which is a binary vector indicating whether a node in one system can detect the CDCF signal from at least another node in another system. The set of all IIVs of a system will constitute the Coexistence PHY List (CPL). For example, let us consider the case of K=3 non interoperable systems (A, B, and C) as shown in Figure 6.

The three circles indicate the interference range of each system, i.e. the region where nodes of a second systems would detect the CDCF signal transmitted by the nodes in the first system. Nodes in system B would build the CPL shown in Figure 7 which would have the following meaning:

- Master Mb detects a CDCF signal in field b0 of the CDCF window associated to system A, i.e. there is at least one node in A that is in interference range of Mb.
- Nodes x and z do not detect any CDCF signal.
- Node y detects a CDCF signal in field b0 of the CDCF window associated to system A and also in field b0 of the CDCF window associated to system C
- Node w detects a CDCF signal in field b0 of the CDCF window associated to system C.

	A	B	C
Mb	1	1	0
x	0	1	0
y	1	1	1
z	0	1	0
w	0	1	1

Figure 7: CPL of the system in Figure 6. Each row is an IIV.

The IIV of node x calculated in the previous example (IIV(x)="010") corresponds to Pattern 6, IIV(w)="011" corresponds to Pattern 4. The fact that Pattern 6 is associated to node x means that node x can transmit and receive on all eight TDMS without creating nor incurring in any interference from systems A and C. Similarly, Patterns 4 instructs devices in system B with the IIV equal to "011" that they can only transmit and receive during TDMSs #1, #2, #5, #6, #9, and #10. The IIV – TDMA Pattern associations are shown in Figure 5.

	1	2	3	4	5	6	7	8	9	10
Node x	B	B	B	B	B	B	B	B	B	B
	*	*	*	*	*	*	*	*	*	*
Node w	B	B	C	C	B	B	C	C	B	B
	=	=	=	=	=	=	=	=	=	=
UST(x,w)=IIV(x) AND IIV(w)	1	1	0	0	1	1	0	0	1	1

Figure 8: Calculation of the Usable Slot Table (UST).

Two nodes in system B can communicate reliably with each other by simply calculating the Usable Slot Table (UST) as shown in Figure 8. The UST is the logical AND of two IIVs, i.e. it contains a 1 wherever the TDMA structure of sender and receiver has a common TDMS, and 0 otherwise. For example, link x→w can then be established using the TDMSs marked with a "1" in the UST shown in Figure 8. Note that the link x→z would allow nodes x and z to communicate using all available resources as their UST would contain all ones. This means that nodes x and z would use all ten available TDMSs in place of the statutory six that would be statutorily assigned when both systems B and C are present. This represents TR gain of 67%.

Each node can send to its master its own IIV, so that the master of a system can build the full CPL. This can be useful as the master can assign the appropriate transmission opportunities (TXOPs) if the NS of all nodes is known. The master can also advertise the system CPL to all nodes in its system, e.g. using the Beacon Frame. This will allow every node to create the USTs with every other node and thus be able to communicate with any other node using the common

TDMSs flagged by the UST without requiring any intervention from the master node.

IV. Overhead Analysis

Although the IPP does not require any data or management frames exchange between the K non-interoperable systems, there are sources of overhead and inefficiency. These sources will be analyzed in the next sections.

A. CDCF Window

The CDCF window is of fixed length $3 \cdot F \cdot T_{CDCF}$ and periodically repeated every T_{ipp}. Since no data communication is allowed during the CFCF window, a fraction $(3 \cdot F \cdot T_{CDCF})/T_{IPP}$ of the available bandwidth is wasted on the CDCF window. For typical values as the ones being discussed in the IEEE P1901 WG, this fraction is of the order of 0.3-0.4% depending on the mains frequency.

B. TDMS Boundaries

As for the margins around the CDCF signal, the boundary between two consecutive TDMSs that are assigned to different systems must include a timing margin to handle channel non idealities, e.g. imperfect zero crossing detection, load induced phase shifts of the mains, etc. Since not all consecutive TDMSs are assigned to different systems and this overhead strongly depends on the function associating the NS to a specific TDMA structure, we will only consider the best and worst cases of the example in Figure 5.

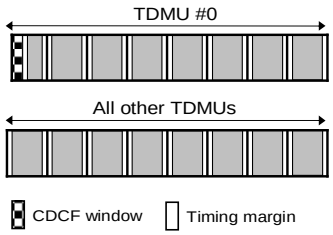

Figure 9: Timing Overhead: Worst case

The worst case occurs when every adjacent TDMS is assigned to different systems. In this case, a margin across all boundaries is necessary as illustrated in Figure 9. The overhead in this case is given by $4 \cdot (2 \cdot S \cdot T_{CDCF})/T_{IPP}$ (the overhead associated to the CDCF window and calculated in the previous section is not included here). For practical values, this overhead is around 3-4% depending on the mains frequency.

The best case occurs when all TDMSs in a TDMU are assigned to the same system, e.g. as in the Patterns 5-7 shown in Figure 5. In this case, the only margin necessary would be the margin immediately following the CDCF window in TDMU#0. Therefore, in this case we would have T_{CDCF}/T_{IPP}, which is of the order of 0.05%.

C. Management Massages

Several kinds of messages are involved in the IPP and their impact on system efficiency will be analyzed separately.

Schedule notification

Within the MAC design of major PLC system, similar to Wireless LAN which is controlled under HCF, the basic unit of allocation of the right to transmit onto the PL channel is the TXOP. Each TXOP is defined by a starting time and a defined maximum length. The TXOP may be used by a node winning an instance of CSMA contention during the Contention Period (CP) or by a non-master node of allocated link ID during the Contention Free Period (CFP).

All nodes in the communication area shall comply with the scheduling information contained in Beacon Frame transmitted by the Master node during a Beacon cycle. Beacon Frames contain an entry that consists of link ID and allocated time for scheduled links. A node can transmit frames within the time specified in the Beacon Frame schedule information. After receipt of a Beacon Frame, the link listed first in the Beacon Frame can exclusively use the power line media for the time defined in the End Time subfield of the first schedule information field, which starts at the end time of beacon period.

Beacon Frame format

The Beacon Frame indicates the beginning of a beacon cycle. An example frame format of the Beacon Frame assumed here is shown in Figure 10.

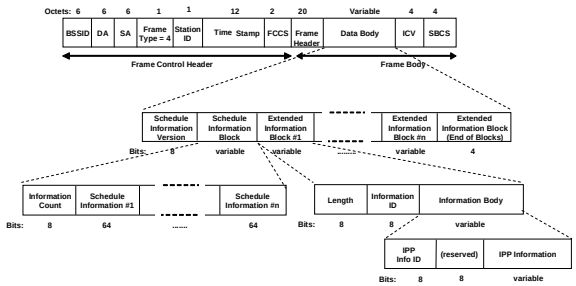

Figure 10: Example of Beacon Frame format

Beacon Frame is composed of Frame Control Header (FCH) and Frame Body (FB) . The FCH is composed of BSSID, DA (Destination Address), SA (Source Address), Frame Type, Station ID, Time Stamp and FCCS (Frame Check Sequence).The data body of the Beacon FB contains transmission schedule information. Data Body of the Beacon Frame includes the Schedule Information Version, the Schedule Information Block and one or more Extended Information Blocks (EIBs).The Schedule Information Block includes Information Count fields, and one or more Schedule Information fields. Each EIB includes Length, Information ID and Information Body. IPP information which Master node broadcasts to slave nodes can be transmitted by using these EIBs.

IPP Information type

Master node uses EIBs (Extended Information Blocks) in Beacon Frame to broadcast IPP information to slave nodes. If the Information ID is equal to that of IPP Information, the EIB shows the IPP Information. This EIB type can carry several types of information according to the IPP Info ID. The IPP Info ID is a 8-bit field that identifies the IPP message type. The IPP Message is a variable length field that contains actual information. Contents of the IPP Information field

depend on the IPP Info ID. If the Information ID in EIB is that of IPP information and IPP Info ID is 0, the EIB shows the Basic Information for IPP. This information shows the start location of the IPP field and detection status of the NS. If the Information ID in EIB is that of IPP information and IPP Info ID is 1, the EIB shows the Coexistence PHY List (CPL) for IPP. This information shows list of combination of MAC address of a node and the NS of the node.

Overhead calculation

Assuming that the different networks each of which uses different PHY are utmost four networks, NS of a node can be indicate by 4 bit per node. However MAC address of a node is 6 octets. Then, the IPP Information area of CPL will be a multiplication of 6.5 octets and the number of nodes. Representing the number of nodes by N, a frame length of the Beacon Frame will be expressed by (in octets)[(1)]:

Beacon Frame length ($N<M+1$) = FCH + FB=

$= 34 + 1+ 1+8*N + 4+6.5*N =$

$= 40+14.5*N$

Beacon Frame length ($N>M$) = FCH + FB=

$= 34 + 1+ 1+8*M+ 4+6.5*N$

$= 40+8*M+6.5*N$

The overhead of Beacon Frame can be evaluated by comparison with a beacon cycle. Beacon Frame length can be converted into time domain in the following way. Let us assume that for a PLC system using multi carrier modulation the symbol length of the system is 10 us and the coding efficiency of the Beacon Frame is 10 Bytes per symbol. Let us also assume that the overhead of PHY layer such as Preamble and Frame Control is 20 symbols. Then, Beacon Frame length can be calculated as follows:

Beacon Frame length (N<M+1)= PHY overhead + Beacon Frame length (octets) / 10(Bytes/symbol)*symbol length (us)

= 10*20+ Beacon Frame length/10*10

= 240+14.5*N (us)

Beacon Frame length (N>M)= PHY overhead + Beacon Frame length (octets) / 10(Bytes/symbol)*symbol length (us)

= 10*20+ Beacon Frame length/10*10

= 240+8*M+ 6.5*N (us) for (N > M)

In order to limit this overhead to less than 1% of a beacon cycle (400 us, for 50 Hz cycle), the maximum number of nodes is N=12 when M=10 or N=24 when M=0. Since these numbers are too small for typical home network applications, we propose the following two improvements.

We can use an ID which corresponds to the MAC address in the CPL. Assuming the maximum number of nodes are 256 nodes, one octet of ID is enough. Then, the Beacon Frame length can be modified as follows:

Beacon Frame length(N<M+1)= PHY overhead + Beacon Frame length (octets)/10 (Bytes/symbol)*symbol length (us)

= 10*20+ Beacon Frame length/10*10

= 240+9.5*N (us)

Beacon Frame length(N>M) = PHY overhead + Beacon Frame length (octets)/10 (Bytes/symbol)*symbol length (us)

= 10*20+ Beacon Frame length/10*10

= 240+8*M+1.5*N (us)

In this case, limiting the overhead to less than 1% of a beacon cycle yields to a maximum number of nodes N=53 (when M=10) and N=106 (when M=0).

In a second approach, we can avoid transmitting in the beacon Frame information on a per-node basis and limit the broadcast to only the worst case NS, i.e. the XOR of all the IIVs in the CPL. This will limit the overhead in the Beacon Frame to just few bits. Using this approach, any node in the system will be able to initiate a direct link with each other using the TDMA structure associated to the worst case NS as these are the only TDMSs common to all nodes. Once a direct link has been established, nodes can exchange their actual IIVs and eventually exploit the availability of additional common TDMSs.

V. Simulation Results

The path gain between two outlets in the same apartment has been statistically modeled as a lognormal random variable on the basis of recent results on the statistical properties of the PL channel [8]. As shown in Table I of [8], we can model the channel attenuation in dB as a Gaussian random variable whose mean and standard deviation are 48.9 dB and 9.3 dB, respectively. If two outlets are on different phases or in different apartments, their attenuation can be modeled as a random variable with the same-apartment distribution plus a constant attenuation value which we call Inter-System Attenuation (I-ATT). In simple words, the parameter I-ATT indicates the additional attenuation separating two PLC systems for example when they are located on different floors. Throughput gains will be calculated using I-ATT as a parameter varying between 0 dB (all nodes in the same home/apartment, and on the same AC phase) to Max I-ATT=60 dB (maximum attenuation between systems that still allows to detect the IPP signals). For the case of three systems, I-ATT refers to the attenuation between any pair of systems.

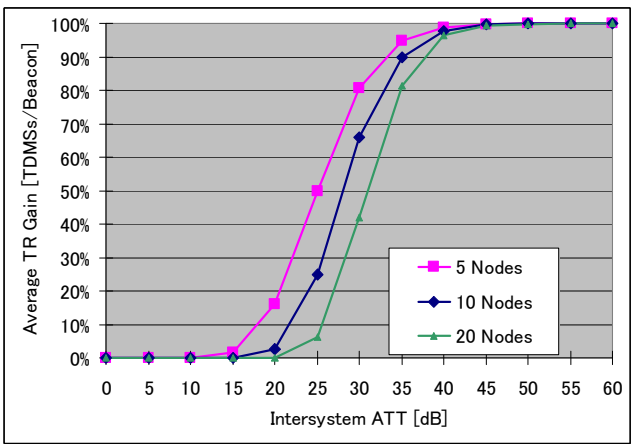

Figure 11: Performance of proposed TRA in terms of average TR gain per system versus I-ATT in dB. Case of two systems present.

(1) We assume that the number of nodes using Contention Free access is M.

TR gains are expressed in terms of average number of utilized time slots (TDMSs) in a beacon period (TDMU). Averaging is carried out twice: first, over all possible pair of links that can be established with a given set of nodes and attenuations and, then, over 1,000 Monte Carlo realizations of house topologies. TR gains are here expressed in terms of how many TDMSs a system can use in addition to the number of statutorily assigned TDMSs. The TDMA patterns used for the simulations are the ones shown in Figure 5. We have also simulated scenarios with different number nodes (5, 10, and 20 nodes in each system), assuming that all nodes in every system were actively transmitting the CDCF.

We first considered the case of two systems present and the average TR gain per system is shown in Figure 11. We also considered the case when three systems are present, see Figure 12 (in this case, I-ATT refers to the attenuation between any pair of systems). We notice that TR gains start between 15 and 25 dB of Inter-system attenuation, depending on the number of systems and of nodes per system. These values of I-ATT are similar to the attenuation values usually found between adjacent apartments.

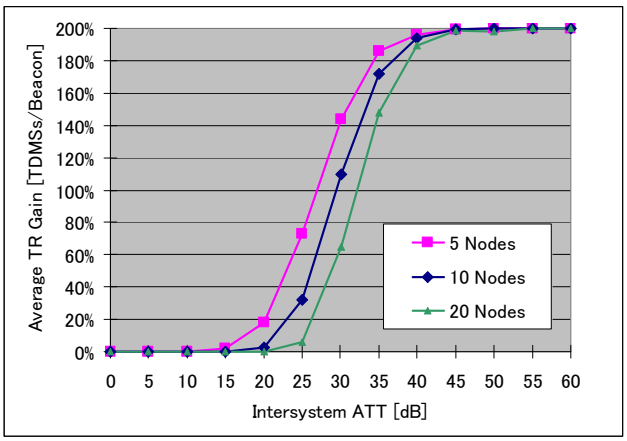

Figure 12: As in Figure 11, but for the case of three systems present.

It is also interesting to note that TR gains in both cases decrease when the number of nodes per system increases. This is due to the fact that the probability that a node detects the CDCF signal transmitted by a neighbor increases with the number of nodes. This effect can be seen as the price to ensure TR gains without message exchange between systems as in [7], and can be compensated in several ways:

- Introducing an IPP field indicating the amount of resources requested by a system so that nodes can give up unused slots when they are not needed.
- Using power control on the CDCF waveform, e.g. a node that is rarely active can decrease the transmit power of (or even cease transmitting the) CDCF.
- Each system can perform autonomously TR among its own nodes, e.g. using the TRA proposed in [7].

VI. Conclusions

We have addressed the issue of coexistence between non-interoperable PLC systems. A simple protocol, IPP, has been proposed and analyzed in terms of complexity and overhead. Accurate simulation results were also given for one of the most important features of the IPP, the capability of achieving TR gains. Simulations have confirmed that substantial TR gains can be obtained starting at inter-system attenuations of around 15 dB.

Although originally conceived to operate on PLs, IPP is also a candidate for ensuring coexistence on other media. Since TDMA is the basic mode of operation of IPP, availability of a clock to synchronize all neighboring devices is important. Since devices operating on any media are generally plugged in the PL, clock information can still be extracted from the PL while the CDCF signal transmission and detection will occur on the other media.

References

[1] D. Arlandis, J. Barbero, A. Matas, S. Iranzo, J.C. Riveiro, D. Ruiz, "Coexistence in PLC Networks," *IEEE International Symposium on Power Line Communications and Its Applications (ISPLC)*, pp. 260-264, April 6-8, 2005.

[2] CEPCA, "Ensuring coexistence for high-speed powerline carrier applications," *IEEE International Conference on Consumer Electronics (ICCE)*, pp. 155-156, Jan. 7-11, 2006.

[3] V. Dominguez, "UPA proposal for the coexistence of PLC networks," *IEEE International Conference on Consumer Electronics (ICCE)*, pp. 157-158, Jan. 7-11, 2006.

[4] The Consumer Electronics Powerline Alliance (CEPCA), Available Online: http://www.cepca.org

[5] The Universal Power Line Association (UPA), Available Online: http://www.upa.org

[6] S. Galli, O. Logvinov, "Recent Developments in the Standardization of Power Line Communications within the IEEE," *IEEE Communications Magazine*, vol. 46, no. 7, July 2008.

[7] S. Galli, Y. Masuda, Y. Urabe, Time Reuse Algorithms: A Novel Approach to Solving the Issue of Scalability in Dense Power Line Networks," *IEEE International Symposium on Power Line Communications* (ISPLC), Dresden, Germany, Mar. 30 – Apr. 1, 2009.

[8] S. Galli, "A Simplified Model for the Indoor Power Line Channel," *IEEE International Symposium on Power Line Communications* (ISPLC), Dresden, Germany, Mar. 30 – Apr. 1, 2009.