Arent Fox

November 20, 2009

Michael B. Hazzard
Attorney
202.857.6029 DIRECT
202.857.6395 FAX
hazzard.michael@arentfox.com

VIA ECFS

Marlene H. Dortch, Secretary
Federal Communications Commission
Office of the Secretary
445 12th Street, SW
Washington, DC 20554

Re: Notice of *Ex Parte*, CC Docket Nos. 01-92 and 96-262

Dear Ms. Dortch:

On November 19, 2009, representatives of Hypercube Telecom, LLC ("Hypercube") met with representatives of the Wireline Competition Bureau's Pricing Policy Division. Clay Myers, Executive Vice President, Robert McCausland, Senior Vice President, and I attended the meeting on behalf of Hypercube. Al Lewis, John Hunter, Doug Slotten, and Lynne Engledow attended the meeting on behalf of the Pricing Policy Division. The attached presentation served as the basis for discussion.

Hypercube further discussed Level 3's May 12 petition, which Level 3 inappropriately styled as petition for declaratory ruling, and Hypercube's filings debunking the May 12 petition. Hypercube also discussed the unlawful efforts of Level 3, DeltaCom, and Excel to: (i) disrupt merits resolution of on-going tariff enforcement actions pending in federal court and before state public service commissions and (ii) undermine the Commission's tariffing regime through unlawful self help. Indeed, the fact that both Level 3 and Excel have competing product offerings – that they fail to acknowledge – demonstrates without question that their intent is to squelch competition and get free service from Hypercube for as long as possible.

The Commission has recognized that interexchange carrier ("IXC") self-help efforts, such as those being perpetrated by Level 3, DeltaCom, and Excel, "threaten to compromise the ubiquity and seamlessness of the nation's telecommunications network…." Access Charge Reform, Reform of Access Charges Imposed by Competitive Local Exchange Carriers, *Seventh Report and Order and Further Notice of Proposed Rulemaking*, 16 FCC Rcd. 9923, ¶ 24 (2001). In spite of the Commission's express directives that IXCs pay tariffed rates, a minority of IXCs – notably Level 3, DeltaCom, and Excel – continue to knowingly and willfully engage in unlawful self-help practices by illegally withholding payments for access services they have taken and from which they have benefited.

Hypercube emphasized that its federal tariff *does now and always has complied with the Commission's regulations and orders*. No party in any forum has ever even one time credibly suggested otherwise.

First, section 61.26(a)(3) of the Commission's rules provides that CLEC interstate switched access exchange services "shall include the functional equivalent of the ILEC interstate switched access services typically associated with the following rate elements: CCL (originating and terminating); local end office switching; interconnection charge; information surcharge; tandem switch transport termination (fixed); tandem switch transport facility (per mile); tandem switching." 47 C.F.R. § 61.26(a)(3). That regulation codifies the Commission's conclusion in the *Seventh Report and Order*:

> A number of CLEC commenters urge the Commission not to set the benchmark at "the ILEC rate" because they claim that CLECs structure their service offerings differently than ILECs. *We seek to preserve the flexibility which CLECs currently enjoy in setting their access rates. Thus, in contrast to our regulation of incumbent LECs, our benchmark rate for CLEC switched access does not require any particular rate elements or rate structure....* In this regard, there are certain basic services that make up interstate switched access service offered by most carriers. Switched access service typically entails: (1) a connection between the caller and the local switch, (2) a connection between the LEC switch and the serving wire center (often referred to as "interoffice transport"), and (3) an entrance facility which connects the serving wire center and the long distance company's point of presence. Using traditional ILEC nomenclature, it appears that most CLECs seek compensation for the same basic elements, however precisely named: (1) common line charges; (2) local switching; and (3) transport. *The only requirement is that the aggregate charge for these services, however described in their tariffs, cannot exceed our benchmark.* In addition, by permitting CLECs to decide whether to tariff within the safe harbor or to negotiate terms for their services, we allow CLECs additional flexibility in setting their rates and the amount that they receive for their access services.

Seventh Report and Order at ¶ 55 (emphasis added). Thus, the FCC has provided CLECs with "flexibility" to maintain a rate structure that matches the functions that the CLEC provides. Hypercube's tariffed charges track the network functions that Hypercube provides IXCs in accordance with the Commission's benchmark.

The Commission also has addressed the tariffed access charges a CLEC, like Hypercube, may assess when the ultimate end user is not Hypercube's retail customer (*i.e.*, the CLEC is not serving the end user directly). Specifically:

Arent Fox

> [B]ecause there may be situations when a competitive LEC does not provide the entire connection between the end-user and the IXC but nevertheless providing the functional equivalent if the ILEC's interstate exchange access services…[the CLEC is entitled to charge for the work it performs]."

Access Charge Reform, Reform of Access Charges Imposed by Competitive Local Exchange Carriers, *Eighth Report and Order and Fifth Order on Reconsideration*, 19 FCC Rcd. 9108, ¶ 13 (2004). Indeed, the FCC rejected the contention that a CLEC must provide the "full connection between the IXC and the end user" in order to collect access charges. *Id.* at n.48.

In accordance with the Commission's findings, when Hypercube "passes calls between two other carriers," Hypercube charges "the tandem switching rate." *Id.* at ¶ 21. The Commission also has held that CLECs "*also have, and always have had*, the ability to charge for common transport when they provided it…." *Id.* (emphasis added). Hypercube does provide common transport, and Hypercube's rates for providing common transport functions are benchmarked to the competing ILEC rate. *Id.* ("Competing LECs that impose [common transport] charges should calculate the rate in a manner that reasonably approximates the competing incumbent LEC rate.").

As noted above, the Commission has explicitly found that the unlawful, self-help actions of the likes of Level 3, DeltaCom, and Excel threaten the ubiquity and seamlessness of the nation's telecommunications network. This self-help also threatens to irreparably harm carriers, like Hypercube, that abide by the Commission's rules, even when their competitors, like Level 3, Excel, and DeltaCom, are unlawfully engaging in self-help to gain an unfair and unlawful competitive advantage in the marketplace.

If you have any questions or need additional information, please contact me.

Sincerely,

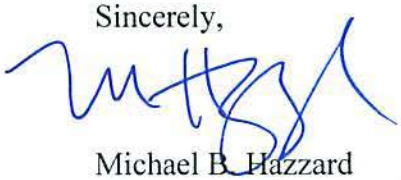

Michael B. Hazzard
Counsel to Hypercube Telecom, LLC

Attachment

cc via email: Al Lewis
John Hunter
Doug Slotten
Lynne Engledow

HyperCube

***Ex Parte* Presentation**

November 19, 2009

HyperCube Background

Services Provided	• HyperCube provides facilities-based competitive tandem services as an alternative to traditional networks. HyperCube only charges IXCs for the functions HyperCube performs. – advantage is lower cost to other carriers to originate and terminate traffic – provides network diversity to achieve ubiquity and reliability in telecom networks – capable of handling traffic from a broad spectrum of carriers (CLEC, Cable, ILEC, IXC, VoIP, Int'l)
Why do we provide these services?	• Competitive landscape characterized by numerous, growing independent networks. – interconnecting these networks efficiently is necessary – growth in both local (not subject to access) and non local (subject to access) traffic • Traditional networks are the default carrier, but are not investing in tandem infrastructure. • Traditional networks are not always an efficient means of interconnecting networks. – ILEC tandem architecture was originally designed to serve only the ILEC's end users • Innovative operating models provide the same services more efficiently. • Competitive tandem services is a direct result of a competitive market.
Why is HyperCube different?	• Highly scalable, modern & flexible architecture allows carriers to customize interconnection. • Network access payments to carriers selecting HyperCube as a tandem provider. – offsets costs required to transition traffic to HyperCube's network – provides incentives for interconnection with rights for originating & terminating traffic • Strategy serves end users without creating or changing end user calling patterns. • Provides a single efficient interconnection point. • Promotes a collaborative and mutually agreed interconnection plan.

HyperCube Competitive Tandem Services

Efficient, scalable, modern and innovative network design

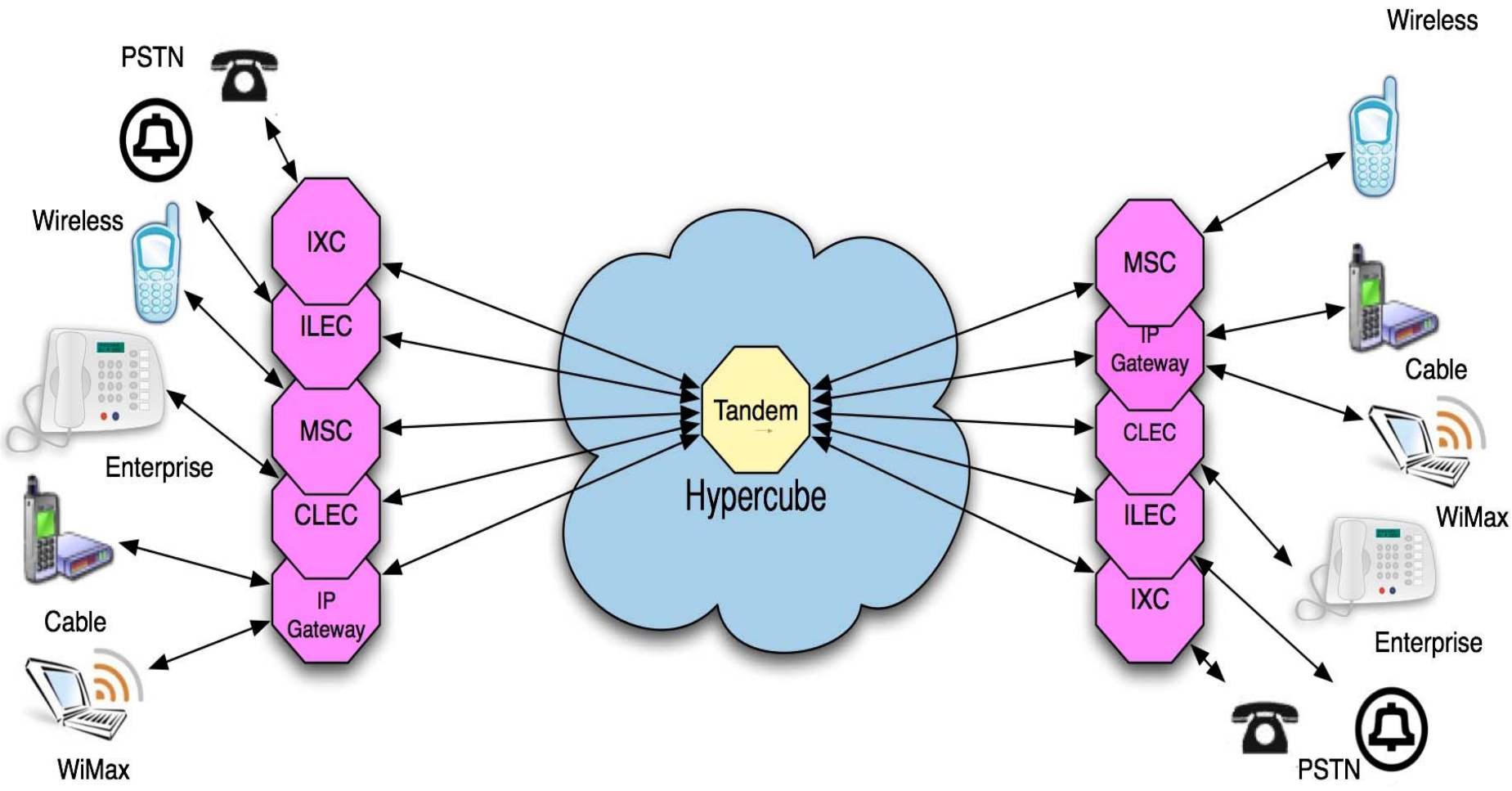

Competitive Tandem Advantage

	Traditional Networks	HyperCube
North Texas Wireless MTA # 7	• Area covers 12 LATAs • 94 tandems	• 1 softswitch
Network Architecture	• No major changes in last 20 years • Designed primarily to serve ILEC end users • No incremental investment	• Softswitch, highly scalable • Colocate switches with competitive providers • Purchase transport from all providers
Market Positioning	• No incentive to serve the needs of competitive carriers	• Deliver innovative services to the edge of competitive carriers' network and remove costs
Tandem interconnection for competitive carriers	• Requires traffic to be delivered to traditional networks • Required to purchase traditional network services to interconnect • Required to interconnect at multiple tandems within a LATA	• Collaborative and mutually agreed interconnection plan • Reflects customers' chosen network architecture • Agnostic as to traffic types and protocols; ability to serve TDM or IP, and all carrier types.
Outcome for competitive carriers	• Requires large number of interconnections • Higher network and transport costs • In some cases, traditional network vendor is also a competitor	• Single, efficient interconnection point • Significant visibility to end user calling patterns and calling data (daily feeds). • HyperCube pays for network access to offset transition costs and gain interconnection rights
End user behavior	• No influence on calling pattern • No effect on number of calls placed	• No influence on calling pattern • No effect on number of calls placed

Competitive Tandem Benefits

- Direct benefits to Interexchange carriers:
  - IP / Nextgen “handoffs” available in addition to TDM.
  - Customizable, consultative and flexible call aggregation.
  - Minimized number of rate elements; simplified billing.
  - Fixed mileage regardless of meet-point or technology or distance.
  - Specialized call handing and disaster recovery routing.

- Direct benefits to wireless, wireline and VoIP carriers:
  - No cost incurred beyond their own networks to support IXC 8YY services.
  - Reduce need for expensive ILEC facilities.
  - No need for SMS/800 database access or SS7 costs.
  - Choice of copper, optical or IP interconnection.
  - Highly efficient and collaborative points of interconnection.
  - Diverse, multiple switch connections (1 to many to 1).
  - Visibility into traffic, calling patterns, congestion/recovery timing.

Toll-Free Call Flow Options

Traditional - Direct Interconnection Between IXC and ILEC

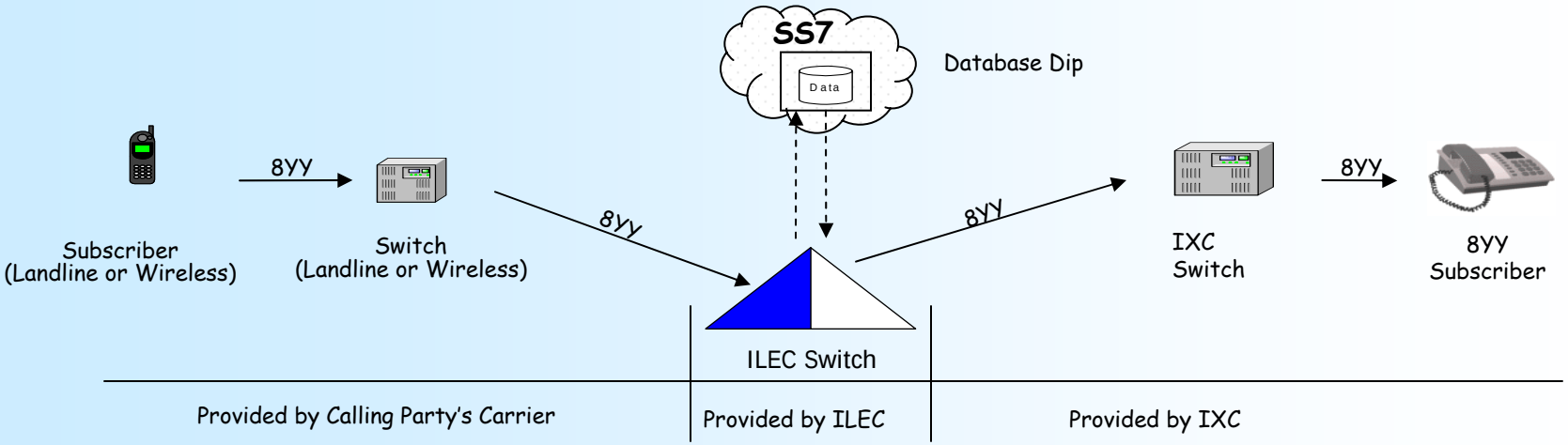

Direct Interconnection Between IXC and Hypercube

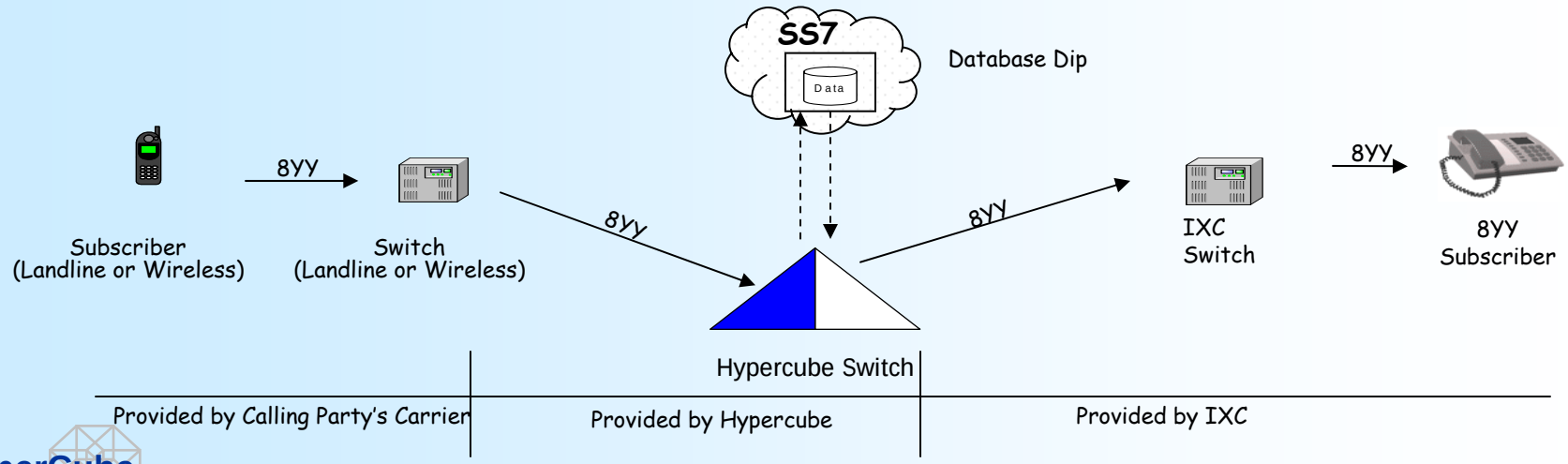

HyperCube

Toll-Free Call Flow Options

Indirect Interconnection Between Hypercube and IXC

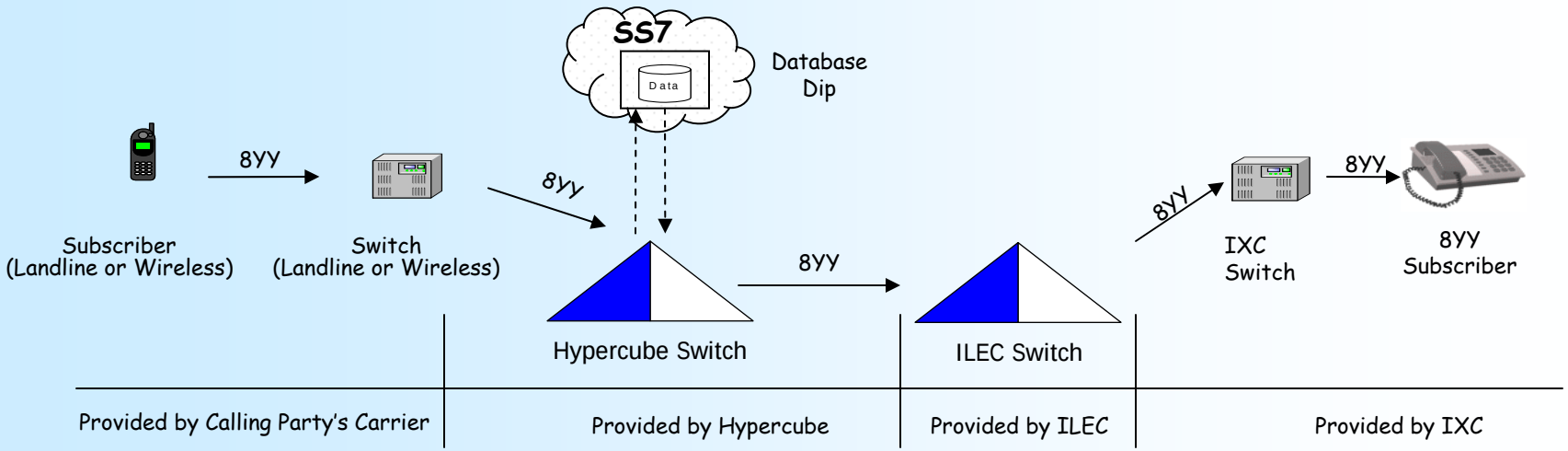

Direct Interconnection Between IXC and Calling Party's Carrier

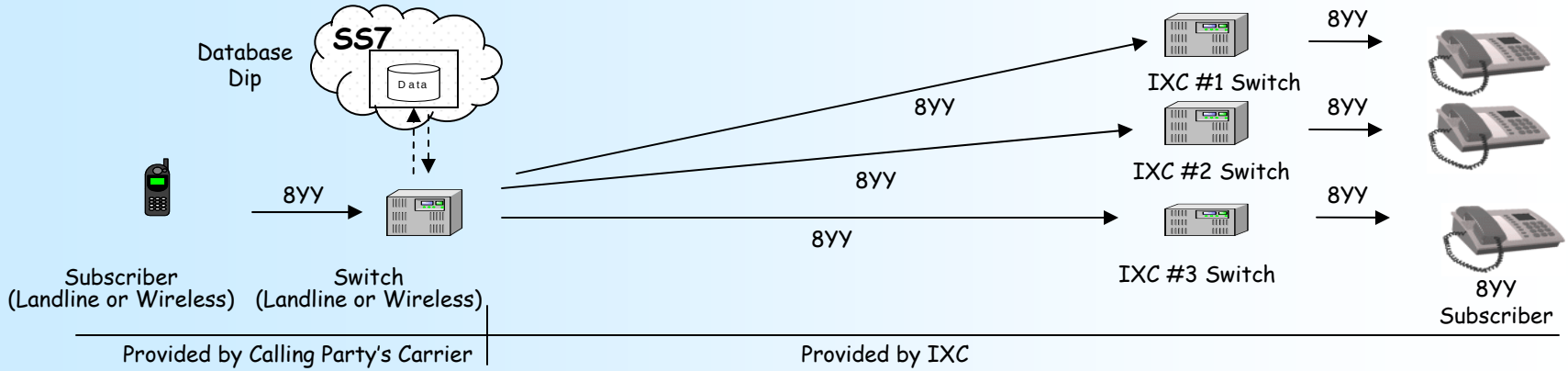

HyperCube

HyperCube vs. Level 3, Excel & DeltaCom

- HyperCube is engaged in litigation with Level 3, Comtel Assets LP (DBA Excel) and DeltaCom. The litigation represents co-carrier disputes that currently reside in the proper forums. The FCC should not be used as a tool for Level 3's, Excel's and Deltacom's litigation strategies.

- Level 3 and Excel have competing toll free origination service products in the market today.

- Level 3, Excel and DeltaCom are each engaged in illegal self help activities and refusing to pay HyperCube's valid, tariffed switched access charges. Self help represents an industry-wide problem that needs to be addressed by the FCC.

- In excess of 90% of the 8YY traffic that crosses HyperCube's network is delivered directly to the IXC under commercial interconnection arrangements. This traffic does not go through the traditional networks and is the most efficient route.

- HyperCube has offered to connect directly to Level 3, Excel and DeltaCom under the same terms as other similarly situated carriers and each has refused. Instead, each has chosen to anoint themselves as the arbiter of switched access elements and rates, ignore validly filed tariffs, participate in illegal self help activities and waste the FCC's time and resources.

- These carriers with similar or the same products and services have refused bonafide offers to interconnect with Hypercube. They have unilaterally created a situation where their costs are increased. They now use the consequences of their refusal to create an illusion of network inefficiency and thereby squeeze competition.

Competitive Tandem Service is Result of a Competitive Market

- Competitive tandem services are a product of the market working. The telecom market is efficient and demand for these services migrates to efficient providers.

- Carriers such as Level 3, Excel and DeltaCom offer the same or similar services, but prefer the status quo, and reject innovation. These carriers represent obstructions to progress in convergence and competition in the telecom industry.

- IXCs engaging in illegal self help tactics should be subject to enforcement investigations and actions, especially those who choose to misrepresent the facts to the FCC to disguise their illegal acts.

- FCC should require direct connection between carriers as a means to ensure the reliability and seamlessness of telecommunications networks.

- Level 3's petition is a sham.
  - The FCC has addressed CLEC interstate switched access rates.
  - There is no prohibition on paying for access to carriers' networks.
  - There is no need for further rulemaking.
  - There is no industry wide problem affecting IXCs today.
  - Self help is an industry wide problem perpetrated by IXCs.
  - Level 3 and many other carriers perform the exact same service as HyperCube.
  - Competitive tandem services provide benefits to carriers and their consumers.