Before the
FEDERAL COMMUNICATIONS COMMISSION
Washington, D.C. 20554

In the Matter of	)	
	)	
International Comparison and Consumer Survey Requirements in the Broadband Data Improvement Act	)	GN Docket No. 09-47
	)	
A National Broadband Plan for Our Future	)	GN Docket No. 09-51
	)	
Inquiry Concerning the Deployment of Advanced Telecommunications Capability to All Americans in a Reasonable and Timely Fashion, and Possible Steps to Accelerate Such Deployment Pursuant to Section 706 of the Telecommunications Act of 1996, as Amended by the Broadband Data Improvement Act	)	GN Docket No. 09-137

COMMENTS OF LEMKO CORPORATION – NBP PUBLIC NOTICE #25

Lemko Corporation ("Lemko") hereby submits these comments in response to the Federal Communications Commission's ("FCC" or "Commission") December 1, 2009 Public Notice ("*Public Notice*"), which seeks comment on issues related to the transition from the circuit-switched Public Switched Telephone Network ("PSTN") to an IP-based communications world.[1] As the first all IP-based mobile network platform commercially available in the market, Lemko supports the FCC's consideration of a Notice of Inquiry relating to the appropriate policy framework to facilitate and respond to the market-led transition from circuit-switched to IP-based networks.

Background on Lemko: Lemko, a privately held company based in Schaumburg, Illinois, has developed a unique IP-based mobile network architecture that meets the next generation

[1] *Comment Sought on Transition from Circuit-Switched Network to All-IP Network – NBP Public Notice #25*, Public Notice, DA 09-2517 (rel. Dec. 1, 2009).

industry standard (System Architecture Evolution Phase II) as defined by the 3rd Generation Partnership Project (3GPP) and endorsed by the ITU. Lemko's 4G all-IP packet-based network solutions deliver a complete mobile system in software at each cell site that can pull the IP cloud out to unserved, underserved, and rural areas. The entire core network functionality takes place at the edge of the network; all traffic is switched and routed at the cell site. Lemko's mobile platform is RF technology-neutral, supporting all versions of the radio access network (including 2G, 3G, and 4G standards as well as CDMA, GSM, UMTA, LTE, and WiMax technologies).

Issues for FCC Notice of Inquiry: As a current provider of an all-IP mobile network platform, Lemko supports the need for a Notice of Inquiry to address policy shifts, questions, and inequities raised by the move to all-IP communications networks. For example, the Commission should revisit the universal service and intercarrier compensation regimes, as well as public safety-related and accessibility requirements, to begin needed reform and harmonization of the current regulatory framework.

Importantly, the Commission should also raise questions related to the unique benefits of IP-based mobile network architecture to rural and underserved environments, and should consider appropriate mechanisms to facilitate greater deployment of IP-based mobile platforms and to address deployment challenges in these areas. These benefits include lower operating costs and more sustainable economics, increased interoperability and reliability, and enhanced optionality (such as peer-to-peer networking and self-routing), as well as greater ability to deliver public safety functionality such as next generation E911, alerting systems, and protection of critical infrastructure during emergencies. The attached white paper describes these benefits for rural carriers in greater detail. Lemko has also obtained substantial experience working with many different rural carrier customers in recent years, and it can provide comments and practical

insights about significant deployment obstacles and case studies of successful broadband deployments.

In light of the many benefits of IP-based mobile networks, the FCC should seek input from carriers, vendors, and other stakeholders as to how to incentivize deployment of advanced IP-based architecture, particularly in rural areas.

Respectfully submitted,

/s/ Brian Ponte
Brian Ponte
Vice President, Business Development
Lemko Corporation
1700 East Golf Road, 7th Floor
Schaumburg, IL 60173
(847) 240-1990

December 22, 2009

White Paper

Rural Mobile Broadband Solutions:

4G Networks
for Today and Tomorrow

Lemko Corporation

Table of Contents

President's Letter 2

Future Mobile Networks.....3

Lemko Solution: Node1 & Node2.....12

About Lemko 18

Acronyms.....19

LEMKO

Executive Summary: The Lemko Mission

Fall, 2009

Dear Colleague,

As you know, our rural communities and their residents struggle daily, not just with the economy, but with the slow availability of new technology and mobile services. Many small town families do not have the same communication services that are available to those living in urban and more populated areas. Broadband, Internet access and the ability to conduct business electronically are often not available in these markets. Vast areas and their people have been overlooked.

Lemko knows that the backbone of our nation deserves the best technology with the strongest support from the best suppliers.

We offer rural carriers the ability to deploy their very own, cost-effective network and provide fourth generation mobile broadband communications for their users.

Lemko's 4G technology protects the world's greatest resource – our people. We deliver fast and flexible cellular networks for all rural markets.

On the phone, on-line and on the farm are no longer mutually exclusive.

We look forward to working with you and supporting your efforts to bring next generation technologies to rural citizens everywhere.

Sincerely,

Bo Pyskir
President
Lemko Corporation

Your Future Network

The industry is 'buzzing' with 4G excitement. The hype is centered around the higher speed next generation radio access portion – LTE and WiMAX. But operators cannot overlook the infrastructure impact of 4G broadband data support. Business sustainability, voice support and interconnect must all be considered for a successful next generation mobile broadband network.

Boundaries are collapsing between communication networks and providers. Over 100 million users subscribe to Skype, which offers voice calls over the Internet. Traditional telephone carriers offer data and media services. Subscribers watch videos on their cell phone and receive high speed Internet access through their home phone line. Wireline home phones are giving way to cellular phones. At the end of 2008, over 20% of all homes in America had no wireline phone service but relied solely on their cell phone for voice communication. The percentage of wireless-only households is higher for adults aged 18-29 (35%). (Source: FCC CMRS Competition Report, January, 2009.)

Growth in wireless broadband traffic brings many new opportunities and challenges for operators. There are opportunities for revenue with high speed data, applications, content delivery and new subscribers. There are also numerous challenges. New technology within wireless networks is needed to support broadband data. This means new standards, new business partners and the need to support a new class of subscriber devices.

Opportunity or Challenge?

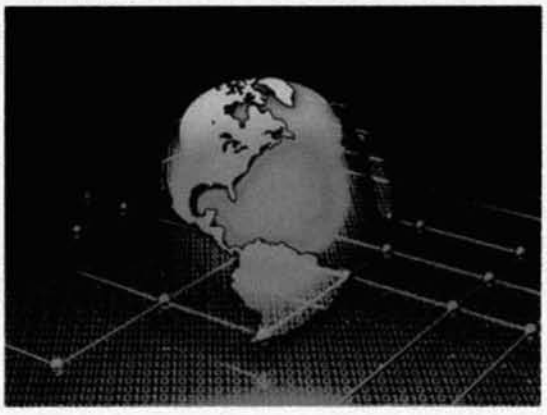

- Collapsing boundaries between Wireline, Wireless, Internet and Content providers
- New Technology, Standards
- New data-friendly devices
- Changing Business Models
- New partners

Finally, mobile broadband changes the business model – it changes the game. In the current era of 'all-you-can-eat' data plans, revenue does not keep up with costs. Cost per packet must be cut as data volume increases to keep wireless business sustainable.

Market Drivers

Just how big is the data growth? According to several sources, mobile data traffic will double every year for the next 5 years. It will reach more than 2 exabytes per month by 2013. An exabyte is one quintillion bytes, or a 1 followed by 18 zeros before the decimal point. Based on recent traffic growth data, this is a realistic forecast.

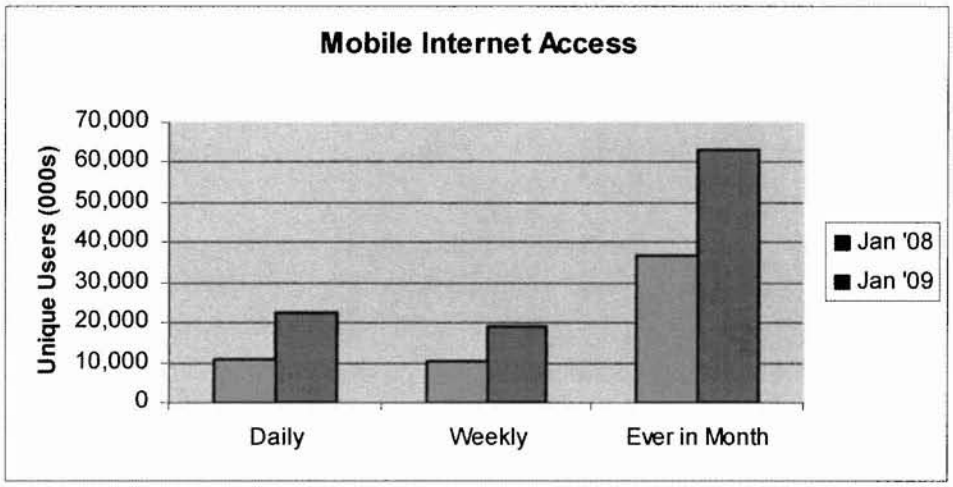

ComScore research shows that 42 million people used their mobile devices in October 2008 to access the Internet. Approximately 8.5 million of them downloaded a game to their mobile device in November 2008. By March 2009 the number of applications downloaded had grown to 11.3 million.

The growth is being driven by several factors, including new high bandwidth applications and a new class of data-friendly subscriber devices. The iPhone Application Store recently announced that more than 50,000 applications are available for their platform, allowing each consumer to customize their experience. Social networking is also driving usage as subscribers send photos and videos and access sites like Facebook and Twitter.

While mobile data usage is doubling each year, the associated revenue is not. Analysts predict that data revenue will only double in the next few years. That leaves operators with the task of building a high speed data-capable network with new radios, additional backhaul, and burdensome operation expenses, while wondering how they are going to pay for the network.

Data Delivery Challenges

The market is demanding data. Vendors and operators have responded to these requirements. The industry created new, fourth generation technology and developed new standards for high speed data.

LTE delivers mobile high speed data to users. However, access is just one component of high speed data delivery. The entire path from access point to final destination must be capable of supporting the highest data rate and maximum volume of users. Other data delivery challenges are backhaul volume, lowering latency and lowering costs. Resolving these issues is essential to a sustainable mobile broadband business.

Backhaul requirements have historically doubled with each new generation of cellular technology. The number of lines connecting the base station (BTS/RBS) to the controller (BSC / RNC) in GSM and CDMA systems required 2-4 T1s per base station. 3G systems like UMTS need 10+Mbps or 4-8 T1s to support the subscriber usage volumes.

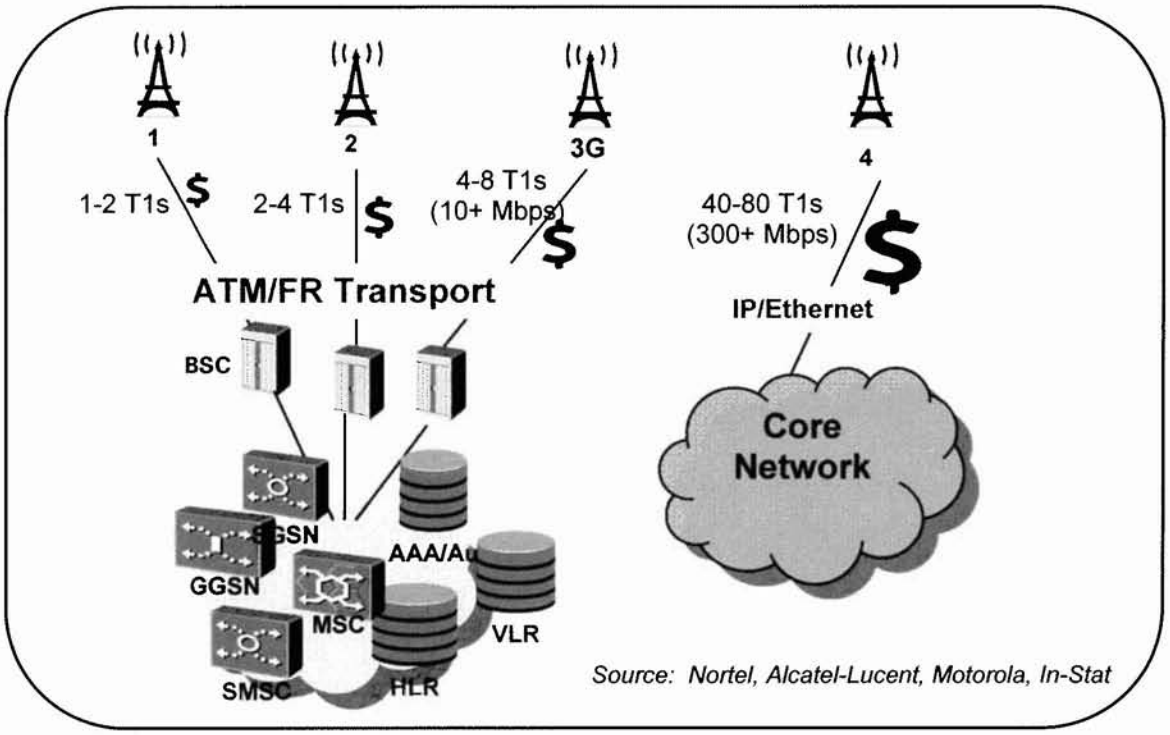

When one looks at the link speed of a 4G system like LTE, the required amount of backhaul goes up 10X or more, potentially a profit and business 'killer'. Cellular vendors estimate that each sector could require 100+ Mbps. If an operator deploys a 3 sector system and engineers in 'overhead' for signaling and other items, the bandwidth per site could easily reach 300 – 400 Mbps. The *cost* of backhaul, even with IP links will exceed the data revenue received if all calls must be sent or backhauled to a distant location for delivery, authentication and billing. Backhaul also increases *latency*, or the time it takes for a packet to cross a network connection, from sender to receiver.

Network Vision, Architecture & Standards

Future networks must fully support high speed data, voice and mobility. The circuit switch world (PSTN, SS7) provides high quality voice services. The Internet provides high speed, low latency data services. And cellular networks provide full mobility including hand-over and roaming. Each network supplies one or two of the required characteristics, but not all three. Furthermore, each network type utilizes different equipment, different topologies and different specifications, making it difficult to converge their cores.

Standards organizations recognize this and have efforts underway to identify the requirements and develop specifications for next generation mobile broadband network – or the 4G Core network.

The International Telecommunications Union or ITU set a vision and direction for next generation networks. A Next-Generation Network is defined by the ITU as "a packet-based network able to provide telecommunications services and able to make use of multiple broadband, QoS-enabled transport technologies and in which service-related functions are independent from underlying transport-related technologies. It supports generalized mobility." (Source: ITU-T Recommendation Y.2001.)

There are two primary standards organizations for the cellular industry: 3GPP and 3GPP2. Both were founded in 1998 and are collaborations of several organizations. Each sets the specifications for mobile radio systems and issues numerous technical reports and technical specification documents.

3GPP A GLOBAL INITIATIVE 4G 3G 3RD GENERATION PARTNERSHIP PROJECT 2 "3GPP2"

The focus of 3GPP is on the GSM family of cellular solutions. This includes GSM, GPRS, EDGE, HSxPA and UMTS, which utilize the MAP/CAMEL networking protocols. 3GPP is supported by standards bodies in North America, Europe, Japan, China and Korea.

The focus of 3GPP2 is on the CDMA family of cellular solutions. This includes CDMA, CDMA2000 and EV-DO solutions, which utilizes ANSI-41/WIN as the networking protocol. It is supported by standards bodies in North America, Japan, China and Korea. Europe does not participate as they only deploy the GSM solutions across Europe.

Both groups are converging on LTE as the next generation 4G air interface standard and pledge to support WiMAX. This will be the first time there is a common standard between the two organizations. You can download various technical reports and specifications from their web sites -- the URL for 3GPP is www.3gpp.org and the URL for 3GPP2 is www.3gpp2.org.

Mobile broadband standards organizations have a dual challenge in defining the next generation mobile networks. The first challenge for 4G Core networks is swiftly delivering high volumes of high speed data. The second – and most important – challenge is to solve the business issues for carriers. Next generation networks must be designed in a way that allows carriers to be profitable. (Sources: 3GPP, 3GPP2, 3G Americas, Qualcomm)

There are 4 issues that must be resolved in order to provide high speed, profitable data. They are latency, high volume data support, efficiency and cost.

"The issue for operators is their business model," states Paul Jacobs, CEO at Qualcomm. "As operators sell more data, they are having to cut prices. This is driving the need for inexpensive, effective solutions."

Issues facing mobile broadband operators define the discussions and ultimately the recommendations and specifications for 4G. The standards organizations determined the optimal 4G solution is an all-IP network with a flat, distributed architecture. An 'Internet-like' model is necessary for efficiency (meaning intelligence must be at the edges of the network). And a new radio access network or RAN must be defined that supports very high speed data transmission.

Issue	Resolution	Specification
Cost	All-IP backhaul, flat network	IP, EPC
Latency	Flat, Distributed Architecture	EPC / SAE
Data	RAN Capacity	LTE
Efficiency	Internet, Distributed	EPC, LTE, IP

The ITU has identified desirable characteristics of 4G cellular systems. Their documents list the following characteristics for next generation mobile networks:

- Packet based
- Separation of control and bearer functions
- Distributed processing
- Open interfaces
- Broadband capabilities
- Generalized mobility
- Compatible with existing cellular networks

The goals in the 3GPP document known as TR23.882-800 closely match the ITU's vision:

- 4G core networks are to be simplified, all-IP flat networks.
- They must deliver lower latency and higher throughput.
- 4G core networks also distribute control functions, to minimize the impact of a single point of failure.
- Networks must support existing or legacy cellular systems like GSM and CDMA. Additionally, they should support non-3GPP broadband wireless systems such as WiMAX.
- There must be end-to-end Quality of Service
- One physical element can implement multiple logical nodes or functions

The diagram below, taken from the 3GPP document, shows the ideal network consisting of several 4G entities all interconnected via IP lines.

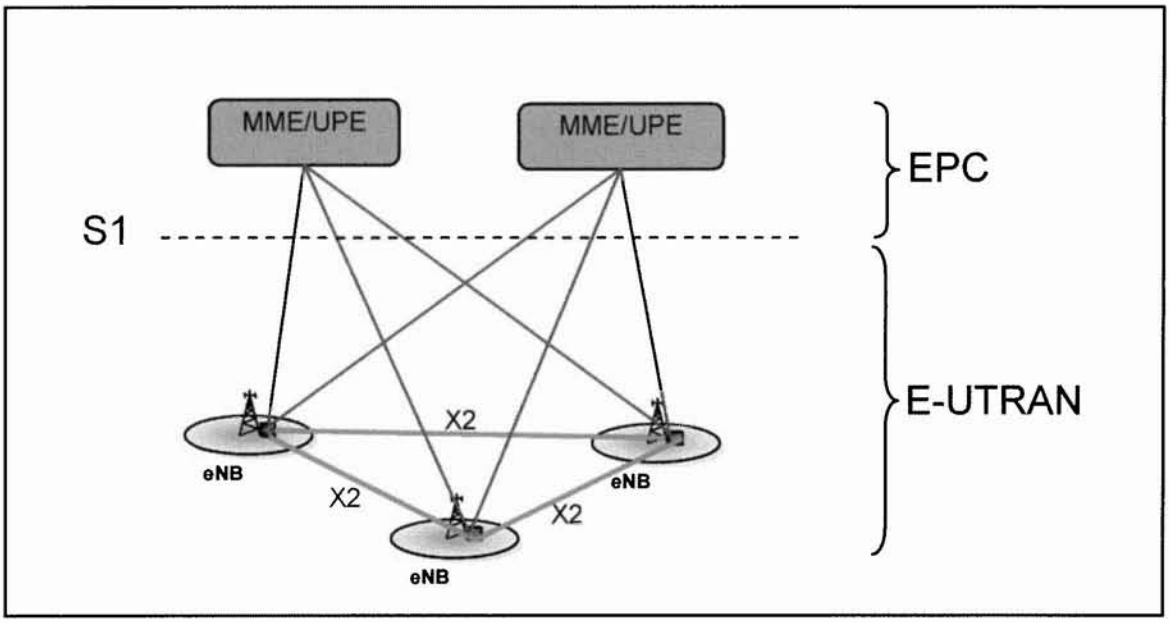

The network side of 4G, referred to as SAE or System Architecture Evolution, is still being defined. The 3GPP standards organization has released several Technical Specifications and Technical Reports describing the 4G architecture, its requirements and numerous interfaces.

SAE is also referred to as EPC or Evolved Packet Core. Another 4G network term is EPS, or Evolved Packet System. EPS is the EPC plus the eNodeB.

3GPP defined EPS in Release 8 as a framework for an evolution or migration of the 3GPP system to a higher-data-rate, lower-latency packet-optimized system that supports multiple radio-access technologies. The focus of the work is on the packet-switched domain, with the assumption that the system will support all services—including voice—in this domain.

Various documents define the network architecture, architectural requirements and interfaces between the different 4G network components. TS-23.002 defines the network architecture. TR23.882 describes the vision for 4G core networks and identifies 41 architectural requirements for 4G. It is noted as incomplete. TS23.221 identifies the architectural requirements specifically for networks migrating from a 3G network.

Note that the 4G network progresses to fewer layers. Also note that in keeping with 3GPP traditions, the new generation architecture brings with it a new group of acronyms.

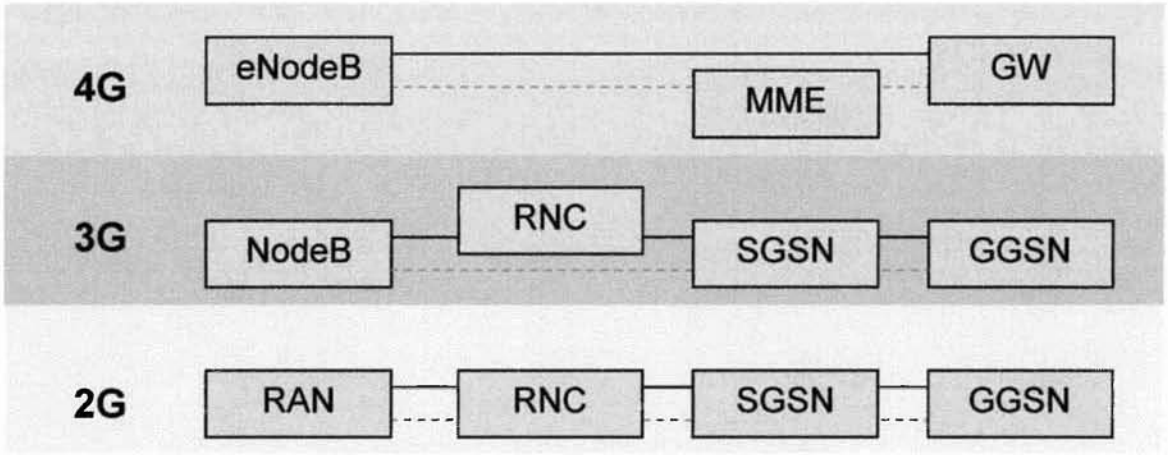

4G Flattens the Network Architecture

One of the key aspects of a 4G network is that it is designed to allow the core network to evolve independently of the radio access. Although it will most likely be deployed in conjunction with Long Term Evolution (LTE), EPS or a 4G core network could also be deployed for use with 2.5G and 3G radios such as HSPA+. The 4G core specification also includes support of non-3GPP or non-cellular radio access technologies like WiMAX.

4G Components

There are 3 main components in a 4G EPS system: the eNodeB, the MME and the GW. The eNodeB includes the radio access portion. The MME (Mobility Management Entity) includes signaling and control functions, and the GW (Gateway) includes bearer and gateway functions. The GW Gateway is often split into two functional sections: the Serving Gateway (S-GW) and the PDN Gateway (P-GW). A functional element called the Policy and Charging Rules Function (PCRF) may reside in one of the main components or may be separately contained.

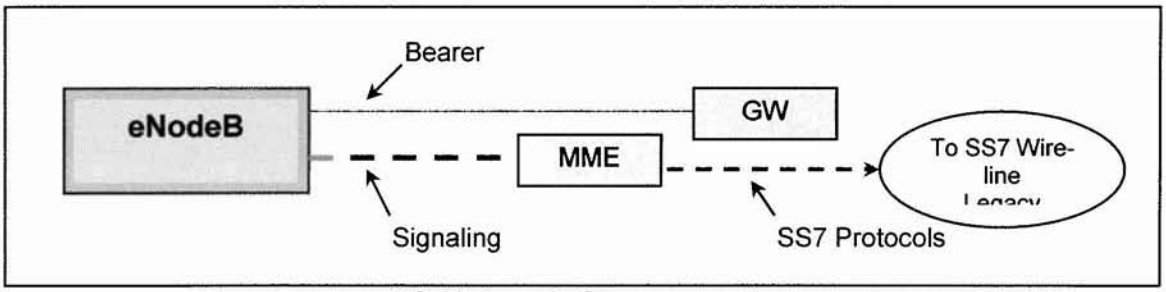

4G Network Components

4G Networking

There is one more important element of 4G networks, and that is the manner in which the systems network or interconnect. The use of IP technology provides many networking benefits such as peer-to-peer networking and node-to-node direct communication.

Peer Networking
Peer-to-peer networking brings numerous advantages to the operator and end user. They include self-routing, self-healing, improved reliability, cost-effective single site networks, and collaboration or the ability to form a smart telecommunications grid. Other benefits include self-routing and self-healing aspects, improved reliability, economical single site networks, and the ability for numerous operators to collaborate for higher efficiencies.

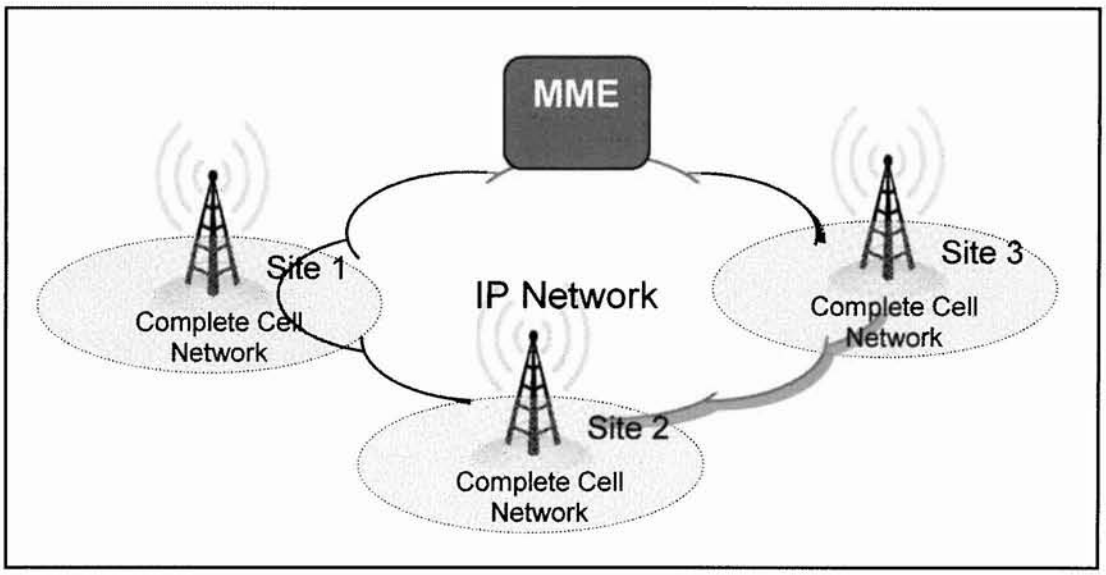

Self-routing
The sites and embedded protocols enable new properties within the cellular network that allow self-routing and self-healing aspects. Should an IP link fail, the network will automatically detect the failure and re-route traffic through other paths to its final destination. Automatic routing reduces the chance for technician errors (no typing mistakes in the routing tables), further increasing reliability.

Improved Reliability
4G networks have a flat architecture. This means many of the cellular system functions take place locally – at the eNodeB or cell site. Distributing the intelligence to the edge of the network improves reliability by limiting the impact of a single point of failure. In the event of a line or equipment failure, the outage is limited to the area covered by that single site. Additionally, 4G networks can be designed to have adjacent cell sites 'power up' to minimize the coverage gap.

Single Site Networks
A flat, distributed architecture allows networks to economically start small and grow as traffic increases. As most of the functionality is contained at each site, operators no longer need to purchase several pieces of expensive, proprietary hardware to control, switch, and authenticate. With the 'hierarchical' overhead minimized, operators can start as small as only one site and easily scale upwards to meet their traffic and coverage needs.

Collaboration
Fourth generation networks enable collaboration between networks and between operators. This further lowers cost as operators can now share the cost of inter-connect and certain network components. Collaboration will lead to a smart telecommunications grid.

LTE Voice Delivery Concerns
The current LTE specification, Release 8, does not support voice - it is a high speed data-only solution. There are latency, quality of service and hand-over concerns with supporting voice calls across LTE and its IP-based backhaul connections.

The ITU's vision of next generation networks and the SAE/EPS plans do support high quality voice in future releases. Vendors expect LTE to support voice by Release 10.

4G Architecture Deployment with 2G/3G Radios
4G Core networks solve many of the cost and backhaul issues carriers are experiencing today. The logical question becomes "Can this all-IP, distributed, affordable 4G core architecture be deployed with 2.5G or 3G radio access systems?"

The answer is '**yes**'. The Evolved Packet Core or EPC is defined in a way that allows the network to evolve independently of the radio access portion. Next generation network requirements are specifically defined to support legacy systems and non-3GPP systems like WiMAX.

Lemko has a commercially available 4G solution that operates with 2.5G and 3G radios and handsets. It is based on IP technology and utilizes IP protocols all the way to the cell site. All cellular functions, including switching, authentication, billing and control are completed at the cell site, eliminating backhaul and dramatically lowering latency. Lemko solutions contain all of the characteristics described by the ITU for next generation systems: it is packet based, provides distributed processing, has broadband capabilities and separates control and bearer functions. Additionally Lemko solutions support voice traffic, utilize open interfaces, provide full mobility, and are compatible with existing cellular networks.

Lemko's 4G Solution

Node1

While the industry tends to focus on technology and inter-operability, an equally important aspect for next generation networks is the cost structure. Future networks must provide a sustainable business model. Lemko's mobile broadband solution not only meets the vision set forth by standards organizations but is also designed to cost-effectively deliver high speed data and high quality voice to areas that require just one cell site for geographical and capacity coverage. Node1's software-only approach keeps the up front capital expense low enough to deploy only one cell site. An all-IP, fully distributed design means ongoing operations expense remains low enough for operators to be profitable year after year. Further, Lemko delivers all of the benefits of the 4G core network vision described by the ITU.

Node1™ is an all-IP solution that runs cellular as an application on the Internet. It contains all of the functions of an eNodeB (radio access plus radio network controller), all of the functions of an EPC (enhanced packet core) for data, and all of the functions of a legacy cellular network (MSC, HLR/VLR, AAA, AuC, CDR creation, SMSC, and OAMP) for voice. Node1 is an entire mobile broadband cellular network located at each cell site, which cost effectively serves just one site and grows to cover a large area.

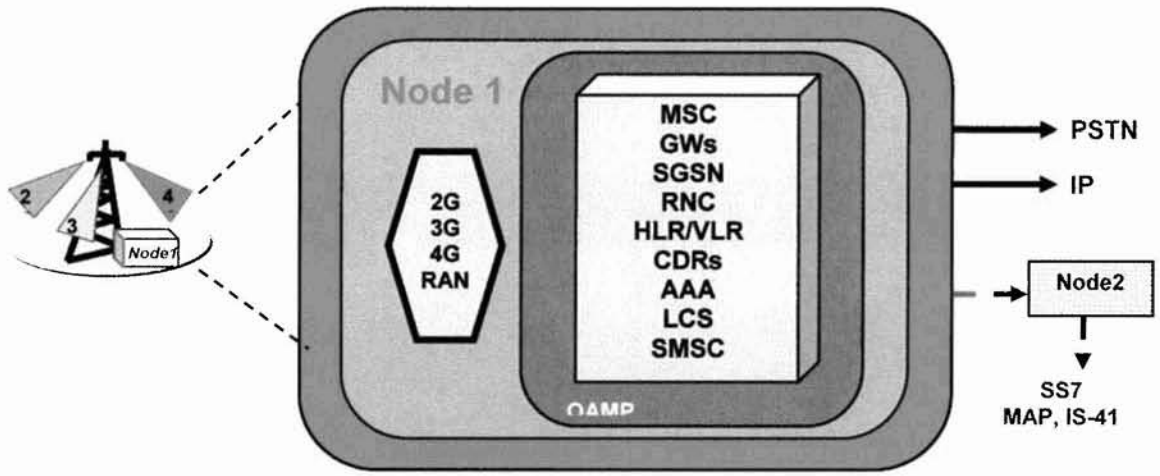

Lemko's Node1 patented technology reduces an entire cellular network into one suite of software that resides on a single physical entity and connects to an IP network for voice, high speed data, messaging, and media traffic.

Multiple Node1 systems can be connected via IP for a larger coverage area or a larger subscriber base. Full mobility and hand-offs are supported. The solution is highly scalable, allowing rural operators to begin with a single site and grow to a large network containing hundreds of nodes as traffic and capacity requirements increase.

Data sessions can connect to a public or private IP network at the Node1 site since the product contains full Mobility Management (MME) and Gateway (GW) functionality.

Connection to the Internet takes place directly at the cell site, which dramatically lowers latency.

Mobile-to-Mobile voice calls and SMS text messages are managed within the Node1, including all charging and CDR creation. Voice calls can connect locally to an IP network for low cost transport of Voice over IP (VoIP) to other locations, or to the local PSTN.

Software upgradeable to LTE

Both the Node1 core software and the 4G-upgradable digital radio are software upgradable to 4G LTE. This saves an operator's investment and delivers a financially viable path to future technologies and applications.

The BTS3900 digital base station simultaneously supports multiple frequencies and multiple carriers. Operators can start with the HSPA or EDGE air interface (2.5G) wireless service and later add UMTS to the base station while still providing HSPA or EDGE with the same base station. As another option, operators can begin with UMTS and simultaneously provide LTE with a software upgrade to the eNodeB and to the Node1 packet core. The base station is available in numerous frequency bands, including 700 MHz.

Rural operators now have a cost effective method of delivering mobile broadband service to areas where only one cell site is required for service.

Lemko is the only vendor that provides high speed data, SMS and a high quality voice service over an all-IP core network today.

No Backhaul

Node1 eliminates costly backhaul by performing all switching, control, authentication and even billing record creation at each site. There is continuous local service even during inter-connect line drops, improving customer satisfaction and revenue. Connections to other networks or Node1 systems are completed across IP lines, communicating in a peer-to-peer manner. Node1 makes mobile broadband service affordable for even the smallest rural communities.

Fully Featured, Fully Tested

Lemko's Node1 may be small in size and cost, but it remains BIG on features and services. Each system provides a full complement of subscriber features, including high speed data, high quality voice and all of the features one expects on a large, centralized MSC including caller ID, call waiting, call forward and SMS. It has passed rigorous GSM IR-24 and IR-35 tests with some of the largest cellular carriers in North America.

Green and Eco-Friendly

Node1 keeps ongoing operational expenses to a minimum. It requires very little power – less than 300W in some configurations. Low power means minimal heat generation, eliminating air conditioning requirements in most environments. Additionally, its small size minimizes space requirements and ecological impact.

Smart Telecom Grid Networking

The use of IP technology in Lemko's 4G network provides many networking and interconnection benefits, such as node-to-node direct communication.

Peer Networking. Lemko's peer-to-peer networking brings numerous advantages to the operator and end user. These include self-routing, self-healing, improved reliability, cost-effective single site networks, and the ability to form a smart telecommunications grid.

Self-routing. Lemko's sites and embedded protocols enable new properties within the cellular network that allow self-routing and self-healing aspects. Should an IP link fail, the network will automatically detect the failure and re-route traffic through other paths to its final destination. Automatic routing reduces the chance for technician errors (no typing mistakes in the routing tables), further increasing reliability.

Improved Reliability. 4G networks such as Lemko's system have a flat architecture. This means many of the cellular system functions take place locally – at the cell site. Distributing the intelligence to the edge of the network improves reliability by limiting the impact of a single point of failure -- the outage is limited to the area covered by that single site. Additionally, 4G networks can be designed to have adjacent cell sites 'power up' to minimize the coverage gap.

Collaboration. 4G networks also enable collaboration between networks and between operators. This capability further lowers cost as operators can now share the cost of inter-connect and certain network components. Collaboration capability leads to a smart telecommunications grid, so that rural carriers will have the most technologically advanced solution available.

Strong Value Proposition

Lemko's Node1 provides a strong value proposition to rural carriers. Below are the unique characteristics of a Node1 that deliver value to rural wireless operators:

- Saves your business by protecting access lines through a wireless/wireline bundling strategy
- Keeps call control local – in your markets – and voice and data traffic 'on-net' with termination to your networks
- Delivers a next generation network design: Flat architecture, fully distributed, switches at cell site
- Provides dynamic routing between Node1s and to Node2
- Protects capital investments through a software upgradable path to 4G and next generation technologies
- Provides a single network for Voice, Data and SMS
- Delivers low capital expense requirements: Software-based design, remote upgrades, commercially available platforms
- Incurs low ongoing operations expense: Eliminates backhaul, uses IP to connect
- Supports high speed, high volume data traffic with low latency
- Offers a full suite of Public Safety applications
- Provides compatibility with existing legacy cellular systems
- Offers unlimited scalability: 1 cell site to 1000s of cell sites
- Delivers the benefits of 4G architecture to 2.5G and 3G networks
- Lemko solutions are commercially available today!

Node2

Lemko's Node2™ acts as a bridge between Lemko's distributed IP communication world and legacy circuit-switched networks. By maintaining IP based communication throughout the network, LEMKO can maintain all of the benefits and advantages of a stand-alone IP network while providing interoperability with existing cellular systems and SS7 links. When landline termination requires an SS7 link, Node2 is used to manage the bearer traffic through ANSI or ITU-based ISUP messaging. This allows Node1 cellular systems to continue to manage all mobile-to-mobile calls as well as calls through local connections while routing all SS7 calls through the Node2 to their final destination.

A Node2 consists of Lemko's customer gateway software combined with a cost effective and dense PCI solution. A single Node2 can support multiple Node1 cellular systems with network sizing based on the amount of expected traffic to circuit based networks. Like all Lemko solutions, the Node2 is highly scalable, providing a 'pay as you grow' business model. Sizing is based on the quantity of signaling links and lines required to support your traffic.

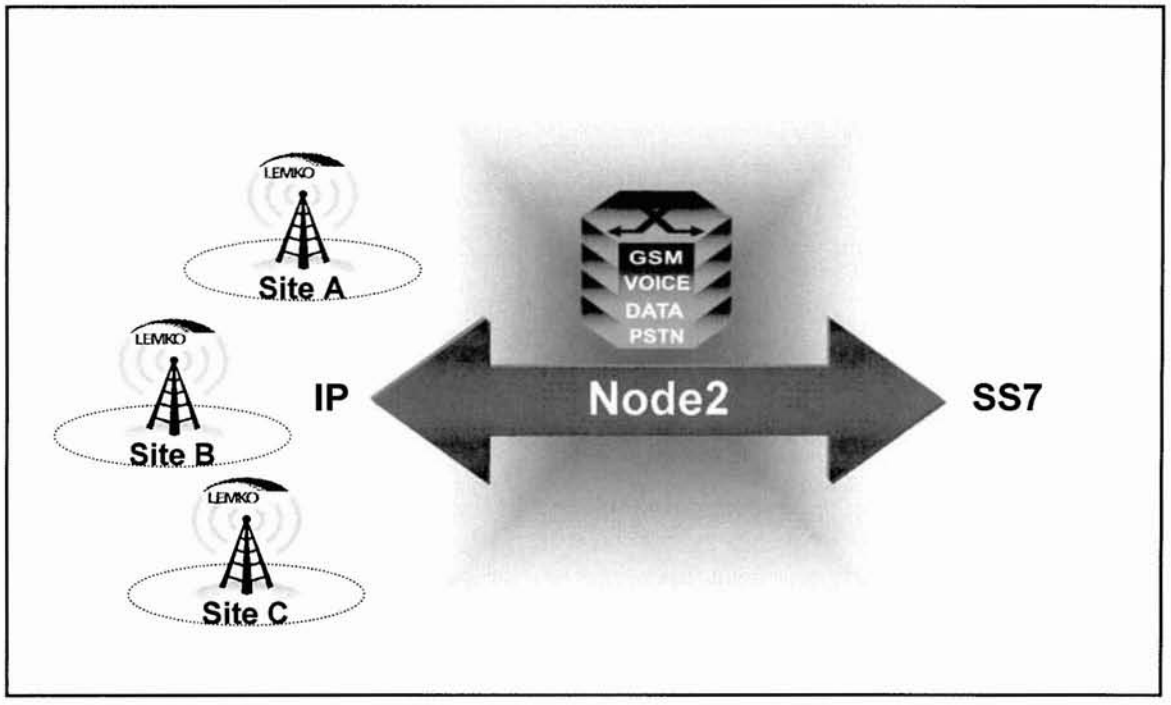

Mobility Management (MME) Functions

In addition to providing a gateway to the circuit switched world, the Node2 delivers other mobility management functions. It may act as a VLR (visitor location register) gateway or a messaging platform, and can provide all GTT routing functions. Node2 may also be used as a tool to provide network data backup. Lawful intercept functions can take place at a Node2.

A Node2 allows signaling and bearer traffic to be separated or split, which allows for complete optimization. As such, each can be installed over separate facilities for easier

network management. Centralized bearer traffic routing uses the Node2 as the primary interface with the PSTN.

Roaming

Node2 contains the VLR information for wireless subscribers that have roamed into the Lemko network. After a valid response from their home cellular system, Node2 sets up a VLR account for the roaming subscriber. VLR data for incoming roamers is kept up to date as the roamer moves between Node1s within the network.

Node2 uses standard GSM MAP and CAMEL messages for 3GPP systems, and CDMA IS-41 messages for 3GPP2 systems to support roaming capabilities to and from Lemko networks. Subscribers from other operators go through standard roaming and authentication procedures through the Node2, providing continuous service to roamers.

Lemko's Node2 delivers the low operations expense and high flexibility of an IP network while providing interoperability with existing cellular and SS7 circuit switched systems.

Cellular Network Extensions

Node2 is an excellent choice for operators who wish to expand their existing cellular service and increase their coverage envelope. A Node1 / Node2 solution allows a network provider to cost effectively and profitably extend coverage into sparsely populated areas while utilizing existing support platforms. Node2 operates as the gateway to the existing network for continued use of legacy platforms like billing and Home and Visitor Location Registers (HLR/VLR).

A Node2 can also be configured to act as a network controller (BSC/RNC) and connect to an existing MSC (mobile switch) via the standard A-Interface protocol.

Public Safety Suite

Rural communities must have access to critical public safety applications. In 2009 cellular phone users will place nearly 100 million calls to 9-1-1. People reach out to help friends, neighbors and even strangers in a time of crisis. The challenge for the rural carrier is to quickly and accurately locate the wireless 911 caller and the location of the emergency.

Single Site E911

Accurate location information is provided within Lemko's system even when only one three-sector cell site is deployed. This solution exceeds the federal standards for reliability and accuracy, meaning rural citizens receive the same level of service as those in urban areas. The information is collected and then sent to a Public Safety Answering Point (PSAP) where help is immediately dispatched to the correct location. Basic 911 emergency calls are supported.

Lemko's location-based emergency application costs less than other E911 Phase II location solutions. No cell site hardware or centralized hardware is required to determine location. There are no usage fees, and a network of Node1s and a single Node2 allows for a single point of connection to the emergency service network.

Emergency Broadcast

Lemko's Cellular Emergency Broadcast system allows emergency response teams and disaster preparedness agencies to alert all active subscribers within the Node1 coverage area of potential danger. Node1 sends a text message to cell phones in the area, alerting them of a pending situation like a severe weather warning. Since a Node1 system covers a specific, known geographic area, a warning can be sent to users in specific targeted areas as small as a single cell site.

When an emergency broadcast message is invoked by the proper authority, the Node1 system identifies all cellular phones in the areas that are in the active call or in the idle mode state. Idle mode cell phones are those that are turned on but not active. The system then calls all of the identified phones. A pre-recorded message or a live agent then delivers a message and describes the emergency scenario. Alternately, the application can send an SMS text message to all of the phones in the coverage area.

Priority Calls

Lemko systems also provide priority call capability. Police, fire and other responders can be assigned the highest priority to ensure their calls always get through in times of emergency. Networks may be designed so public safety teams can access reserved capacity on the network for their use.

About Lemko Corporation

Lemko is a premier IP software company that provides 4G core network solutions for today's cellular systems. The all-IP packet-based solution delivers a complete mobile system in software at each cell site (RAN), distributing the core intelligence to the edge and fulfilling the ITU's vision for next generation networks. Our solutions eliminate backhaul, lower data latency, and provide the lowest total cost cellular solution. This patented and powerful IP solution supports 2G, 3G and 4G radio technologies, enabling a host of broadband wireless, enterprise and emergency communication applications.

Lemko uniquely conquers the obstacles of providing cellular telephony to rural communities and disaster-torn areas. We provide the industry's lowest capital expense and lowest operating expense for areas with a low subscriber base and high transmission costs. These systems are easy to commission and maintain, requiring minimal training. Each Lemko solution is designed to be highly portable, survivable, scalable and compatible with existing networks.

Lemko is a privately held corporation headquartered in Schaumburg, Illinois.

Contact Information:

Lemko Corporation
1700 E. Golf Road, 7th Floor
Schaumburg, IL 60173

Brian Ponte: bponte@lemko.com

(CST Central Time Zone)

Glossary of Acronyms

2G: Second Generation mobile networks, primarily GSM, CDMA and TDMA digital air interfaces

2.5G: Second Generation enhanced mobile networks. Includes air interface modifications and network 'add-ons' to support low – medium speed data. Examples are GPRS, EDGE, EV-DO and HSPA

3G: Third Generation mobile networks, known as UMTS and WCDMA. Capable of supporting higher data rates

4G: Fourth Generation mobile networks. Supports high speed data and mobile broadband. Air interface standards include LTE and WiMAX. Core network components include eNodeB, EPC, EPS and SAE.

A-GW: Access Gateway

CDR: Call Detail Record

DEAS: Digital emergency alert system

eNode B: Evolved Node B

eNB: Evolved Node B

E-911 ph2: Wireless Enhanced 911 phase 2 with location ability

EPC: Evolved packet core

EPS: Evolved packet system

eUTRAN: Evolved universal terrestrial radio access network

GGSN: Gateway GPRS support node

GW: Gateway

HSPA: High-speed packet access

HSPA+: High-speed packet access evolved

IMS: IP multimedia subsystem

IP: Internet protocol

LTE: Long-term evolution

MME: Mobility management entity

NAS: Network-architecture specific

NGMN: Next generation mobile network

OFDMA: Orthogonal frequency division multiple access

PCRF: Policy charging rule function

PDN: Packet data network

P-GW: PDN gateway

PTT: Push-to-talk

RAN: Radio access network

RNC: Radio network controller

SAE: System Architecture Evolution

SC-FDMA: Single-carrier frequency division multiple access

SGSN: Serving GPRS support node

S-GW: Serving gateway

SMS: Short Message Service

UE: User Equipment

UMTS: Universal Mobile Telecommunications Service®

UTRAN: Universal terrestrial radio access network

VoIP: Voice over Internet protocol