Before the
FEDERAL COMMUNICATIONS COMMISSION
Washington, D.C. 20554

In the Matters of	)	
	)	
Special Access Rates for Price Cap Local Exchange Carriers	)	WC Docket No. 05-25
	)	
	)	
AT&T Corp. Petition for Rulemaking to Reform Regulation of Incumbent Local Exchange Carrier Rates for Interstate Special Access Services	)	RM-10593

Comments of BT Americas Inc. on Behalf of Itself and other BT Entities

A. Sheba Chacko
Head, Global Operational Regulation and
Americas Regulation - BT Global Services
BT AMERICAS INC.
11440 Commerce Park Drive
Reston, Virginia 20191

Dated: January 19, 2010

TABLE OF CONTENTS

Page

I. INTRODUCTION 1

II. SUMMARY 3

III. OFCOM'S 2008 REVIEW OF THE UK BUSINESS CONNECTIVITY MARKET 5

IV. PRODUCT AND GEOGRAPHIC MARKET ANALYSIS 6

- A. Retail Product Market Analysis 7
- B. Geographic Scope of Retail Markets 10
- C. Wholesale Product Market Analysis 11
- D. Geographic Scope of Wholesale Markets 13

V. ASSESSMENT OF SIGNIFICANT MARKET POWER 16

VI. RELEVANCE OF OFCOM'S ANALYSIS OF THE UK DEDICATED ACCESS AND BACKHAUL MARKETS TO THE COMMISSION'S INQUIRY ON A FRAMEWORK FOR ANALYSIS 20

VII. SUGGESTED FRAMEWORK FOR ANALYZING SPECIAL ACCESS CHANNEL TERMINATION COMPETITION IN THE US 24

VIII. CONCLUSION 32

APPENDIX – DESCRIPTIONS OF RETAIL AND WHOLESALE LEASED LINE SERVICES USED IN THE UK 33

Before the
FEDERAL COMMUNICATIONS COMMISSION
Washington, D.C. 20554

In the Matters of	)	
	)	
Special Access Rates for Price Cap Local Exchange Carriers	)	WC Docket No. 05-25
	)	
	)	
	)	
AT&T Corp. Petition for Rulemaking to Reform Regulation of Incumbent Local Exchange Carrier Rates for Interstate Special Access Services	)	RM-10593

Comments of BT Americas Inc. on Behalf of Itself and other BT Entities

I. INTRODUCTION

BT Americas Inc., a wholly owned indirect subsidiary of BT Group plc ("BT plc"), respectfully submits these comments on behalf of itself and other BT operating entities in the US (collectively referred to herein as "BT"), in response to the Public Notice issued by the Federal Communications Commission ("FCC" or "the Commission") in the above captioned docket on November 5, 2009. BT is a UK-headquartered provider of information and communications services both in the UK, the European Union ("EU") and global markets.[1] In the US, BT is a member of the NoChokePoints Coalition and supports the comments submitted by this coalition. In addition, BT submits these comments on a proposed framework for analysis based on its experience participating in market reviews under the European Commission's ("EC") regulatory

[1] BT holds Section 214 licenses and employs approximately 4000 people in the United States. BT, through its Global Services group, serves the global information and communications technology needs of large business customers worldwide. BT is also the incumbent provider of telecommunications services in the UK except for the Hull area which is served by another incumbent called Kingston Communications.

framework as the main incumbent in the UK market and as a competitive provider in other EU markets.

The EC framework requires national regulators, including Ofcom, the UK regulator, to conduct periodic reviews of a defined set of markets that are typically characterized by dominance. If any provider is found to have significant market power ("SMP"), regulators must apply appropriate regulatory remedies if competition law (i.e., antitrust law) cannot rectify the market failure.[2] National regulators are required to review periodically the level of competition in certain markets, including the retail and wholesale markets for leased lines. Leased lines are dedicated circuits used by customers to carry voice, data and video traffic between their sites. These services are purchased at retail by businesses and government as the building blocks for their communications networks. These services are also purchased at wholesale by competitive providers to provide a wide range of downstream retail services. Competitors purchase "access" (i.e., channel terminations in special access parlance), "backhaul" (i.e., mileage in special access parlance) and "trunk" segments (i.e., intercity/interexchange services). These facilities and services utilize "PDH" (i.e., TDM), "SDH" (i.e., SONET) and Ethernet technologies.

Ofcom recently concluded a market review of what it called the "business connectivity market" ("BCMR") which includes the market for wholesale and retail leased lines.[3] BT believes that Ofcom's research, methodology, analysis and conclusions would be useful to the Commission in constructing a framework for analyzing the special access market. Accordingly,

---

[2] *See Directive 2002/21/EC on a Common Regulatory Framework for Electronic Communications Networks and Services (Framework Directive)*, O.J.L. 108 (2002).

[3] *Business Connectivity Market Review, Statement and Consultation*, Ofcom (Dec 8. 2008) available at http://www.ofcom.org.uk/consult/condocs/bcmr08/bcmr08.pdf (*"BCMR Dec. 2008 Statement and Consultation"*).

BT describes Ofcom's review in these comments and offers useful insights from Ofcom's review.

II. SUMMARY

In order to identify the product and geographic markets, Ofcom used the "hypothetical monopolist test." It identified retail product markets for TDM/OCn-based services that were separate and apart from the markets for Ethernet-based services. It found TDM/OCn-based retail product markets along the following bandwidth breaks: (i) less than or equal to 8Mbps; (ii) greater than 8 Mbps but less than or equal to 45 Mbps; (iii) greater than 45 Mbps but less than or equal to 155 Mbps; and (iv) greater than 155 Mbps. For Ethernet services, Ofcom found two retail product markets: (i) for services less than or equal to 1Gbps and (ii) for services greater than 1 Gbps. Ofcom then performed a retail geographic market analysis. It decided to use fairly small geographic units called postal sectors to assess where competitive conditions were homogeneous. It performed an abbreviated analysis reaching only two firm conclusions – i.e., that in the sub-8 Mbps TDM-based services market and over 1Gbps Ethernet services market, the retail geographic markets tracked BT's incumbent footprint. Ofcom then used its retail product market analysis to derive the wholesale product markets. It found the same retail bandwidth breaks applied to the wholesale access and backhaul, TDM and Ethernet-based product markets. Ofcom then conducted its wholesale geographic market analysis by mapping on a postal sector basis: (i) wholesale service market shares and (ii) network reach of alternative operators whose fiber splice points were within an economic build distance of 200 meters from business premises with over 250 employees. Ofcom also considered whether there were any constraints on BT's pricing and the degree of interconnection amongst alternative operators. Based on this analysis, Ofcom concluded that separate local geographic markets existed for

TDM-based access and backhaul in central London for the: (i) greater than 8 Mbps and up to and including 45 Mbps services; and (ii) greater than 45 Mbps and up to and including 155 Mbps services. Once the relevant wholesale product and geographic markets were defined, Ofcom assessed whether BT had significant market power in each of them.

Based on Ofcom's analysis, BT offers the following insights:

- The Commission must be rigorous about separating retail and wholesale markets.
- The Commission must assess product and geographic markets and market power within each incumbent LEC service area.
- The Commission must be pragmatic in picking the geographic unit for its market analysis as well as pragmatic in including only contiguous geographic units to define a geographic market.
- The Commission should abandon its MSA-based approach.
- The Commission must analyze service shares and network reach in a granular fashion.
- The fact of persistent and high market share and sustained high prices cannot but lead to a conclusion of market power.
- The Commission must obtain good cost and accounting data in order to conduct an effective analysis and implement effective remedies.

BT also offers a three-step test tailored for the US market that might simplify the Commission's task of defining markets and assessing market power. Step 1 is designed to identify those product markets that are not suitable for competitive supply in any geographic market. These services should be subject to price and non-price remedies. Step 2 is designed to identify aggregated geographic markets that might be subject to effective competition. The Commission could use a competitive screen that would narrow down those markets where two or

more competitors have entered the market and serve customers using their own loop facilities. The markets identified in Step 2 would be the only ones for which the Commission would then proceed to conduct a granular analysis to determine if effective competition exists. BT suggests factors that the Commission might use in determining whether a market is competitive including: (i) market share and changes in market share over time; (ii) margin; (iii) the extent to which competitors have deployed loop facilities; (iv) ILEC wholesale prices relative to competitors' wholesale prices; (v) ILEC wholesale prices compared to competitors' retail prices; (vi) whether ILEC pricing is constrained in geographic markets that survive the competitive screen; (vii) scale and scope; and (viii) whether the service can be provided over an ILEC's existing infrastructure without additional expenditure.

III. OFCOM'S 2008 REVIEW OF THE UK BUSINESS CONNECTIVITY MARKET

Ofcom's approach in reviewing this market adhered to the EC's directives and guidelines regarding market reviews, assessing significant market power, and applying appropriate remedies. The European regulatory framework – which is followed by each of the 27 Member countries of the EU – requires that national regulators impose regulation only where there are one or more carriers with SMP and where national and Community competition law remedies are not sufficient to address the problem. The EC requires that markets should satisfy the following three conditions before regulation is imposed.[4]

1. The presence of high and non-transitory entry barriers whether of structural, legal or regulatory nature;
2. No tendency towards effective competition within the relevant time horizon; and

[4] *See Commission Recommendation on Relevant Product and Service Markets within the Electronic Communications Sector Susceptible to Ex Ante Regulation* (2007) available at http://ec.europa.eu/information_society/policy/ecomm/doc/library/proposals/rec_markets_en.pdf.

3. The application of competition law alone will not adequately address the market failure(s) concerned.

Following these principles, Ofcom first defined the relevant product and geographic markets in the BCMR at the retail level and then at the wholesale level within each incumbent provider's service area (i.e., Kingston Communications ("KCOM") in the Hull area and BT in the rest of the UK). Ofcom then assessed whether each incumbent provider possessed SMP in these markets and addressed whether competition law could address market failure(s). Where Ofcom found competition law alone could not address the failure(s), it imposed price and non-price regulation as appropriate on each incumbent provider.

IV. PRODUCT AND GEOGRAPHIC MARKET ANALYSIS

In order to assess incumbent carrier market power in the BCMR, Ofcom identified the appropriate product and geographic markets within each incumbent provider's service area by utilizing the "hypothetical monopolist test" common to EU and US antitrust analysis. Under this test, a product is considered to constitute a separate market if a hypothetical monopoly supplier could impose a small but significant non-transitory increase in price ("SSNIP") above the competitive level without losing sales to such a degree as to make this price rise unprofitable. If the price rise would be unprofitable, because consumers would switch to other products, or because suppliers of other products would begin to compete with the hypothetical monopolist, then the market definition is expanded to include the substitute products. In the context of geographic market definition, it may sometimes be appropriate for products not linked by demand or supply-side substitution to be placed in the same market if competitive conditions within an aggregated area are sufficiently homogeneous. In this way, different areas subject to a similar level of competition are analyzed as a single geographic market.

A. Retail Product Market Analysis

In analyzing product markets, Ofcom first considered product market definition at the retail level. Ofcom believed that such an approach was appropriate because demand for wholesale services is derived from the demand for the retail services for which the wholesale services are an input. In general, where the cost of an upstream input accounts for a sufficiently large proportion of the retail price of a product, the range of available substitutes at the retail level will inform the likely range of substitutes for the wholesale input. This is because a rise in the price of a wholesale input which is passed through in the price of one retail service will cause retail customers to switch to substitute retail products, reducing demand for the wholesale input. Ofcom identified six retail product markets for retail leased lines, namely:

- Traditional interface dedicated circuits up to and including 8 Mbps (including analogue and SDSL services);
- Traditional interface dedicated circuits above 8 Mbps up to and including 45 Mbps;
- Traditional interface dedicated circuits above 45 Mbps up to and including 155 Mbps;
- Traditional interface dedicated circuits above 155 Mbps;
- Alternate interface (Ethernet for purposes of the BCMR) dedicated circuits up to and including 1 Gbps; and
- Alternate interface (Ethernet for purposes of the BCMR) dedicated circuits over 1 Gbps.

See BCMR Dec. 2008 Statement and Consultation at 50-51.

In the process of arriving at these retail product market definitions, Ofcom made the following assessments which may be relevant to the Commission's framework for analysis.

- ***Ofcom determined that based on the data it gathered from end users and providers that traditional interface ("TI") (i.e., TDM and OCn) and Ethernet leased lines belong in separate markets.*** Ofcom found that there were important differences in the functional capabilities of TI and Ethernet services when it conducted its analysis back in 2007. Ethernet services were characterized by greater variable and unpredictable latency than their TDM-based equivalents. There were also distance limitations with point-to-point Ethernet services which did not exist with TDM-based services. These differences were of particular importance to certain industries such as financial services and utilities. Furthermore, a comparison of relative prices and trends in purchases of these services in the UK suggested that users did not switch rapidly between the two services despite significant price differentials. For instance, at bandwidths above 10 Mbps, Ethernet service was the significantly cheaper alternative. Yet, Ofcom's 2007 research did not show customers switching away from TDM-based services to the above 10 Mbps Ethernet equivalent. Supply-side substitution was considered not to be relevant (even if technically feasible) since most suppliers already provided both TI and Ethernet services and would not provide any additional constraint on charges over and above that captured by the demand-side analysis.[5]

- ***Ofcom determined that leased lines and VPNs do not belong in the same market.*** VPNs accessed via Internet links were unlikely to be substitutes for point-to-point leased lines because they did not offer comparable levels of reliability, performance or security. VPNs accessed via leased lines offered equivalent service features but

[5] *See BCMR Dec 2008 Statement and Consultation* at 26; *BCMR, Consultation* (Jan. 2008) ("*BCMR Jan. 2008 Consultation*") at 45-60.

were not a substitute for leased lines because they involve additional complex and costly network management functions typically performed by third parties. Furthermore, a switch to VPN-based services likely has implications for retention of customers' IT staff and capital costs associated with the addition or change-out of equipment. Ofcom found that for these and other reasons customers were unlikely to substitute to a VPN simply in response to a SSNIP on leased line prices.[6]

- ***Ofcom found that leased lines belong in the same market as services provided using SDSL but not ADSL technologies.*** Ofcom found that with ADSL there were actual and perceived functional differences in leased line and ADSL services. ADSL was generally seen as offering poorer service quality in terms of latency, jitter and overall throughput which were factors important to end users. Ofcom's research into prices and trends indicated users did not switch rapidly between the two services even in response to significant price differentials. However SDSL was included in the leased line market because it provides similar functionality. SDSL connections offer the ability to support dedicated, i.e., uncontended, symmetric bandwidth at speeds comparable to digital leased lines up to 2Mbit/s. Ofcom's pricing analysis also suggested that switching might be expected to occur between SDSL and leased lines in response to a SSNIP. Most SDSL users stated that they would switch (if at all) to other symmetric services in response to a SSNIP on SDSL.[7]

- ***Ofcom found that circuits that deliver different levels of bandwidth occupied separate markets.*** Ofcom conducted a price analysis which suggested that, for

---

[6] *See BCMR Dec 2008 Statement and Consultation* at 27-28.

[7] *Id.* at 28.

traditional interface circuits, separate markets existed at around 8Mbps, 34/45Mbps, and 155Mbps. The significant price differences at each bandwidth level suggested that a SSNIP imposed on a lower level of bandwidth would not cause the buyer to switch to a higher bandwidth service. With respect to Ethernet, Ofcom established separate markets for circuits with capacity of: (1) up to and including 1 Gbps and (2) above 1 Gbps. Ofcom's decision was based on data showing that the costs per circuit of Ethernet electronics for circuits above 1Gbps were significantly greater than the total costs of electronics per Ethernet circuit up to and including 1 Gbps.[8]

B. Geographic Scope of Retail Markets

Ofcom's retail geographic market analysis was relatively cursory. In its view, as the market review was primarily about considering competition in wholesale markets (with the exception of the sub-8 Mbps traditional interface retail market) it was not necessary for Ofcom to reach definitive conclusions on the precise scope of the various retail markets. Ofcom came to the conclusion that in the sub-8 Mbps traditional interface and over 1 Gbps Ethernet circuit market, the geographic market tracked BT's incumbent footprint (i.e., the UK excluding Hull). In the other traditional interface leased lines market, Ofcom reached no conclusion about whether the geographic market tracked BT's incumbent footprint or was local. In the Ethernet market under 1 Gbps, Ofcom thought there was evidence of geographic variations suggesting the market might be local.[9]

---

[8] *Id.* at 29-31.

[9] *Id.* at 52-55.

C. Wholesale Product Market Analysis

Based on the retail product definitions Ofcom derived the following wholesale product markets:

Wholesale product markets	Bandwidth breaks			
Traditional Interface Symmetric Broadband Origination (access and backhaul) ("TISBO")	Low Up to and including 8 Mbps	High Above 8 Mbps and including 45 Mbps	Very high – 155 Above 45 Mbps and including 155 Mbps	Very high – 622 Above 155 Mbps
Ethernet Symmetric Broadband Origination (access and backhaul)[10] ("AISBO")	Low Up to and including 1 Gbps		High Above 1 Gbps	
Trunk Segments (SDH/PDH)	All Bandwidths			

See BCMR Dec. 2008 Statement and Consultation at 56.

In arriving at these product definitions, Ofcom analyzed certain issues which again may inform the Commission's framework for analyzing special access.

- Ofcom found that with respect to wholesale access and backhaul, separate wholesale traditional interface and Ethernet markets existed based on its analysis of the retail product market.[11]
- Ofcom found that competitive conditions for radio base station (RBS) backhaul service[12] were essentially the same as in the overall low-bandwidth TI market.

[10] Carriers in the UK impose backhaul mileage charges for TDM as well as Ethernet services.

[11] *Id* at 58.

Accordingly, Ofcom included RBS service in the same product market as traditional interface symmetric access and backhaul services (i.e., TDM-based access and backhaul). Ofcom also found that backhaul for local unbundled loops should fall in the appropriate Ethernet access/backhaul market.[13]

- Ofcom found that the same bandwidth breaks identified in retail markets would also apply at the wholesale level because the wholesale demand is a derived demand.[14]
- Ofcom found that wholesale high-end ADSL services could not be a substitute for symmetric access and backhaul services.[15]
- Ofcom found that a combined market exists for access and backhaul. Ofcom believed competitors would continue to purchase access and backhaul together (i.e., as a combined product) even though BT was just beginning to offer access and backhaul separately. Ofcom thought it was unlikely that competitors would buy separate access and backhaul because the opportunities to combine different traffic streams currently conveyed over service-specific platforms over the converged backhaul links would remain limited.[16]

---

[12] *RBS backhaul services use wireline TDM-based connections to connect cell towers to mobile providers' points of connection. See Figure 2.6, Appendix 1.*

[13] *See BCMR Dec 2008 Statement and Consultation* at 58.

[14] *Id.* at 81-86.

[15] *Id.* at 67.

[16] *Id.* at 62-64.

D. Geographic Scope of Wholesale Markets

Ofcom considered a variety of possible geographic market units including markets based on 1.8 million full postcodes,[17] geographic markets based on 154,000 individual business premises, 10,000 postal sectors (which are an aggregation of postcodes) and the 12 Nations and Regions boundaries in the UK.[18] None of the options presented fit perfectly the requirements of granularity, practicality, technological neutrality (i.e., in not favoring BT's network topology) and homogeneity of competitive conditions within a geographic unit. However, Ofcom believed that basing the geographic market analysis on 10,000 postal sectors represented the best compromise amongst these requirements.[19] It then proceeded to define those geographic markets that had homogeneous competitive conditions, such as they could be aggregated on an administratively sensible basis, using the following criteria:[20]

- An analysis of wholesale service market shares on a postal sector basis using wholesale circuit information provided by operators.[21]
- An analysis of network reach based on the number of alternative operators' networks within an economic build distance of 200 meters of each UK business site belonging to a business with over 250 employees, averaged by postal sector. To achieve this Ofcom collected from both the incumbents and competitive providers fiber network maps, information on "flex points" (i.e., fiber splice points) or aggregation points

---

[17] *In the UK, instead of zip codes, the UK postal service uses alphanumeric postcodes of five to seven characters to denote a cluster of geographic addresses that are proximate to each other.*

[18] *The UK consists of four Nations – England, Scotland, Wales and Northern Ireland – and England is further subdivided into nine Regions which are the South East, Greater London, North West, East, West Midlands, Yorkshire and the Humber, South West, East Midlands and North East.*

[19] *See BCMR Jan. 2008 Consultation* at 106-109.

[20] *See BCMR Dec. 2008 Statement and Consultation* at 89 *et. seq.*

[21] *Id. at 320-322.*

where existing fiber could be added by a competitor to connect to end-users, points of interconnect with BT, and points of interconnect with other competing providers. Ofcom counted competing providers' flex points for each postal sector; assessed the number of competitive operators whose flex points were 200 meters or less away from a large business premise and analyzed the ability for operators to interconnect.[22]

- Consideration of BT's pricing policies, which could inform the extent to which there was a common pricing constraint across geographic areas within BT's service area.[23] For instance, for the Central London area, Ofcom found that BT has lowered its prices for TDM-based access and backhaul services, but BT did not do the same elsewhere.

- Consideration of evidence on the degree of network interconnection between alternative network operators' networks.[24]

Based on its analysis of wholesale service share data, Ofcom determined that there were significant differences in competitive conditions for the wholesale traditional interface access and backhaul markets in the bandwidths of: (i) >8 Mbps and up to and including 45Mbps; and (ii) >45 and up to and including 155 Mbps. For these bandwidths, Ofcom found two geographic markets in the UK in BT's incumbent LEC service territory: a local Central and East London market ("CELA") and a market for the rest of the UK in BT's incumbent LEC service territory.[25] See Figure 1. The areas shaded in the two darkest shades of blue and bounded in red in Fig. 1 represent contiguous postal sectors containing two or more alternate operators with network flex

[22] *Id.* at 323-329.

[23] *Id.* at 94.

[24] *Id.* at 100-101.

[25] *Id.* at 141.

points located 200 meters or less from a business premise of a business with 250 employees or more. Ofcom also found that, in the CELA, BT offered a discount on the prices of all its high bandwidth TI access and backhaul circuits indicating increased competitive pressure in the CELA. In addition, Ofcom found an absence of significant barriers to customers switching service providers in this geographic area, and higher incidences of interconnection between alternative operators as compared to the UK taken as a whole, which indicated less of a reliance on BT's network. CELA was therefore deemed to be competitive, distinguishing it from the rest of the UK.

Figure 1: Boundary of the Central and East London Area ("CELA") Market Proposed in the July 2008 Consultation Document

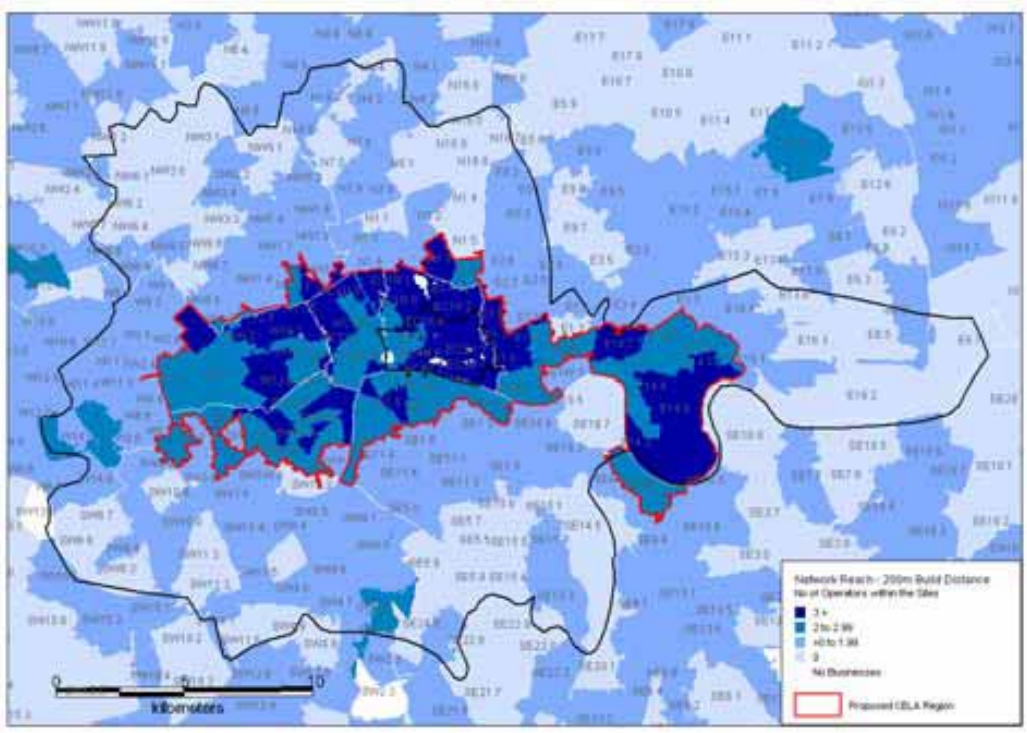

Ofcom's conclusions regarding the wholesale product and geographic markets are set forth below:

Wholesale Product Market	**Geographic Market Definition**
Traditional Interface Symmetric Access and Backhaul up to and including 8 Mbps (low TISBO)	• The UK excluding the Hull area; and • The Hull area (Kingston's incumbent footprint)
Traditional Interface Symmetric Access and Backhaul above 8 Mbps and including 45 Mbps (high TISBO)	• The UK excluding the Hull area and the CELA • The CELA • The Hull area
Traditional Interface Symmetric Access and Backhaul above 45 Mbps and including 155 Mbps (Very high TISBO 155)	• The UK excluding the Hull area and the CELA • The CELA • The Hull area
Traditional Interface Access and Backhaul above 155 Mbps and including 622 Mbps (Very high TISBO 622)	• The UK excluding the Hull area and • The Hull area
Ethernet Symmetric Access and Backhaul up to and including 1 Gbps (Low AISBO)	• The UK excluding the Hull area and • The Hull area
Ethernet Symmetric Access and Backhaul above 1 Gbps (High AISBO)	• The UK excluding the Hull area and • The Hull area

See BCMR Dec. 2008 Statement and Consultation at 90.

V. <u>ASSESSMENT OF SIGNIFICANT MARKET POWER</u>

In order to assess the presence of SMP, Ofcom calculated providers' market shares of respective products in the relevant geographic markets described above. It did so by looking at volumes of circuits owned or controlled by each provider for each of the relevant service products. Per EC decision-making, market shares of over 40 percent trigger concerns about single dominance and very large market shares are, "save in exceptional circumstances, evidence

of the existence of a dominant position …."[26] Nevertheless the EC, European Regulators Group ("ERG") and Ofcom have made clear that market share is not the sole criteria on which to base an assessment of dominance. A forward looking analysis must be conducted to determine if high and non-transitory barriers to entry exist and the market structure tends towards effective competition in the relevant time horizon. In order to do so, the EC and the ERG recommend that regulators consider factors including:

(i) overall size of the enterprise;

(ii) control of infrastructure not easily duplicated;

(iii) absence of or low countervailing buying power;

(iv) economies of scale and scope;

(v) vertical integration;

(vi) absence of potential competition;

(vii) barriers to expansion;

(viii) excessive pricing;

(ix) ease of market entry;

(x) cost and barriers to switching;

(xi) evidence of previous anti competitive behavior; and

[26] *See European Commission Guidelines 2002/C165/03 on Market Analysis and the Assessment of Significant Market Power under the Community Regulatory Framework for Electronic Communications Networks and Services*, O.J.C. 165/6 at ¶75.

(xii) price trends and pricing behavior.[27]

In its BCMR decision, Ofcom identified the following as key in its assessment that BT has significant market power in certain wholesale access and backhaul markets: (i) the ubiquity of BT's infrastructure and the fact that such infrastructure is not easily duplicated; (ii) BT's ability to exploit economies of scale and scope; (iii) the existence of significant barriers to entry and expansion, including high sunk costs; (iv) persistently high BT market share over time (the last assessment having taken place in 2004); and (v) absence of any developments that would serve to reduce the high structural barriers to entry. BT noted to Ofcom that cable company facilities passed 50 percent of UK homes and 85 percent of UK businesses,[28] and that this should mitigate against a finding of SMP by BT. However, the existence of widespread cable facilities did not change Ofcom's belief that barriers to entry in the markets over which BT retained SMP continued to be significant. In Ofcom's view, it had taken into account the existence of competition from cable in its SMP analysis. Furthermore, there mere existence of cable in the street did not mean cable would always exercise price discipline such that market power was removed. For instance, in the below 8 Mbps TDM-based access market, Ofcom stated that even though cable operators had widespread access networks, cable operators were not able to provide symmetric services as efficiently because their networks were designed for asymmetric traffic flows. According to Ofcom, "cable operators can . . . . deploy point-to-point fibre, and may do so in areas where they have duct. However, the fact that the cable operator, Virgin Media, has

---

[27] *For a fuller discussion of factors that regulators should consider, see id. at ¶78; European Regulators' Group Working Paper on the SMP Concept for the New Regulatory Framework* (May 2003) available at http://www.erg.eu.int/documents/docs/index_en.htm.

[28] *See e.g., IDC's 2006 profile of ntl:Telewest, a UK cable provider which is now called Virgin Media. IDC states, "[a]t this stage the ntl:Telewest service is offered only to organizations with offices in the UK (not including Wales), directly connect[ing] to 85% of UK businesses. However, off-net services can be delivered to organizations not in their franchise area."* J. Wall, *ntl:Telewest Business Hosted Profile*, IDC (Jul. 2006).

only around 2 percent of the low bandwidth traditional interface symmetric broadband origination market indicates that even these players do not exert competitive pressure on BT in this market. The above considerations currently lead Ofcom to consider that BT's control of the infrastructure required to provide TISBO services creates a significant entry barrier in the market."[29]

Ofcom also made particular findings with respect to certain markets in which it determined that BT retained SMP. For example, in the low bandwidth traditional interface access market (under 8 Mbps), Ofcom found that the market exhibited a low rate of growth because entry is less likely in a declining market. In the 8 - 45Mbps and 155 Mbps markets, Ofcom was influenced by its finding that new network build was generally only economical for very short access lines and only if there were no other impediments to competition.

Based on its analysis, Ofcom determined that BT retained SMP in the following access and backhaul markets:

- Traditional Interface Symmetric Access and Backhaul up to and including 8 Mbps in BT's incumbent footprint which is all of the UK excluding Hull;
- Traditional Interface Symmetric Access and Backhaul above 8 Mbps and including 45 Mbps in the UK excluding Hull and CELA;
- Traditional Interface Symmetric Access and Backhaul above 45 Mbps and including 155 Mbps in the UK excluding Hull and CELA; and

[29] *See BCMR Jan. 2008 Consultation* at 243.

- Ethernet Symmetric Access and Backhaul up to and including 1 Gbps in the UK (excluding Hull).

See BCMR Dec. 2008 Statement and Consultation at 143-144.

VI. RELEVANCE OF OFCOM'S ANALYSIS OF THE UK DEDICATED ACCESS AND BACKHAUL MARKETS TO THE COMMISSION'S INQUIRY ON A FRAMEWORK FOR ANALYSIS

The analytical framework utilized by the EC and Ofcom to assess the UK access and backhaul markets may not be entirely applicable to the US market because of differences between the US and the UK. Most importantly, the US is much larger and contains more cities requiring close analysis than is the case in the UK. Nevertheless, it is significant that Ofcom has completed just the type of analysis that the FCC must undertake for special access. Moreover, point-to-point telecommunications services in the UK and in the US are essentially the same. Service providers utilize the same technology, must incur the same sorts of sunk costs, and customers utilize the services for essentially the same purposes. Accordingly, the FCC can rely on the EC's and Ofcom's methodology as a guide to conducting a market analysis in the US.

The experience in the UK yields the following basic lessons for the FCC.

⇒ The Commission must be as rigorous as Ofcom and the EC are about separating the retail from the wholesale product and geographic markets in their market reviews and analyses.

⇒ The Commission must examine product and geographic markets and assess market power within each incumbent LEC service area.

⇒ At the same time, the Commission should employ a pragmatic approach in determining the appropriate size of the relevant geographic market. It should use a

unit of analysis that will achieve the objective of assessing areas that have homogeneous competitive conditions, but that are not so granular and hence excessive in number such that the Commission would get bogged down in its analysis and administration of regulatory remedies.

⇒ The Commission should abandon its MSA-based approach to defining relevant geographic markets for special access. The geographic unit Ofcom picked – i.e., postal sectors – is much smaller than the MSA and was chosen on the basis that competitive conditions could be homogeneous throughout the chosen geographic unit. *See* Figure 1 which shows dozens of postal sectors, some only a few hundred yards in diameter. The entire Central and East London area that Ofcom found competitive for certain products is only 10 miles wide and 4 miles measured from north to south. MSAs, on the other hand, are much larger. For example, the Washington, D.C. MSA stretches from Jefferson County in West Virginia to Washington, D.C. and includes parts of Virginia and Maryland.

⇒ In evaluating the geographic market definition, the Commission should evaluate actual service shares of each provider within each geographic unit analyzed, the network reach of competitors using information about how many buildings could be served from competitors' networks within the geographic unit using a reasonable build analysis, and the extent to which competitors, using their own transmission facilities, have actually gained market share within such areas.

⇒ Contrary to ILECs' assertions, it is insufficient to view miles of competitive fiber or competitors' fiber network maps as standalone proof of effective competition. The Commission must map the number of competitors whose network access points are

within build range of a customer premise and evaluate the other barriers to entry and switching costs such as denial of access by building owners, tying arrangements and other anticompetitive clauses in ILEC contracts to determine whether there is dominance and a tendency to effective competition in a two-year time horizon.

⇒ It is likely that there are some relatively low bandwidth special access services for which competitive supply is not generally possible and which the FCC can deem not subject to competition throughout relevant incumbent LEC service areas.

⇒ Ofcom found that TDM and Ethernet did not sit in the same product markets in the UK. However, SDSL-based access services sit in the same market as other symmetric access and backhaul services. Only an equivalent and rigorous market dominance analysis founded on careful product and market analyses will provide answers for the US market.

⇒ Ofcom's conclusion that a combined access (i.e., channel termination) and backhaul (i.e., mileage) market exists in the UK is based on UK -specific conditions. The reasoning underlying that conclusion is inapplicable in the US context because separate access and backhaul services are nascent offerings in the UK. By contrast, in the US, ILECs have offered some types of special access, e.g., DS-1 and DS-3 circuits, as separately tariffed channel termination and mileage services for well over a decade, and there is a well-established market for buying channel termination separately from mileage services for those types of services. Where this is the case, it makes sense to analyze channel terminaions and mileage separately. However, this is not the case with Ethernet. US incumbent LECs generally charge a single price for Ethernet capacity. That charge includes both the channel termination and any

interoffice transport necessary to provide the circuit. Accordingly, there is no need for the FCC to analyze channel terminations and mileage separately for Ethernet.

⇒ Special access services used to connect cell towers to mobile operators' switching centers (e.g., DS-1s) sit in the same product market as other equivalent special access services and should not be separated into a distinct product market. This was Ofcom's conclusion in the UK. It found that the UK equivalent service, RBS backhaul, sits in the same product market as low bandwidth TDM-based symmetric wireline services even though RBS backhaul has been marketed as a separate product by BT in the UK.

⇒ The ability to: (1) retain high market share; and (2) sustain prices at a level that keeps profits persistently and significantly above the competitive level are important indicators for market power per EC and Ofcom decision-making. In particular, in a competitive market, individual firms should not be able to persistently set prices above costs and sustain excess profits. As costs fall, prices should be expected to fall commensurately if competition is effective. This was a key factor in Ofcom's decision to find that BT had SMP in the <8 Mbps retail leased lines market in the UK (excluding Hull). BT had a high market share (80 percent by volume), high profitability and high pricing in addition to other factors identified demonstrating high structural barriers to entry and a lack of tendency to effective competition.[30] Where the evidence in the US context shows that the ILECs have retained high market share and sustained high prices over time, there should be no doubt that they possess substantial market power.

[30] *See BCMR Dec. 2008 Statement and Consultation* at 6.

⇒ Where Ofcom found that BT has SMP, Ofcom also found that competition law (i.e., antitrust law) would not be as effective as regulation in producing effective competition. Ofcom then imposed price and non-price regulatory remedies. In order to impose price remedies, Ofcom had to have good cost and accounting data for BT's services. In the case of US channel termination and mileage special access services, the Commission must likewise obtain good cost and accounting data in order to impose regulatory remedies.

In light of these observations, it is possible to develop an analytical framework for the US special access market that utilizes the Ofcom framework as a guide and starting point, while making adjustments to accommodate differences in the US versus the UK. BT describes below such an analytical framework for assessing the level of competition in the provision of special access channel termination services. The analysis is limited to channel terminations because Ofcom analyzed channel termination (i.e., access services in the UK) and mileage services (i.e., backhaul services in the UK) together, and its analysis does not provide therefore helpful guidance for a stand-alone analysis of special access mileage service in the US. However, as explained above, incumbent LECs do generally charge for Ethernet mileage. Therefore, there is no need to analyze a separate Ethernet mileage market in the US.

VII. SUGGESTED FRAMEWORK FOR ANALYZING SPECIAL ACCESS CHANNEL TERMINATION COMPETITION IN THE US

Product markets. From a technical perspective, the relevant product markets in the provision of special access should be defined by an analysis of demand elasticity by applying the SSNIP test. As a practical matter, however, the FCC is unlikely to be able to utilize this test because it lacks the data to do so and because there are too many individual services at issue in

this proceeding. The FCC will therefore need to establish aggregations of products into markets that are subject to similar levels of competition and that serve the purposes of the analytical framework discussed below.

Geographic markets. There is an inherent geographic specificity in fixed special access services. From a technical perspective, the relevant geographic area in the provision of special access is the individual point-to-point route on which a customer demands transmission service. In the case of channel terminations, the point-to-point route can be understood to mean the location of the building in which the customer is located. Given the size of the US market, it would be impossible to assess the level of competition at each building and administer regulation in a practicable way. The FCC must therefore find ways to aggregate locations.

<u>Step One</u>: Identification of product markets that are not suitable for competitive supply in any relevant geographic market in particular incumbent LEC service areas. In the first phase of its analysis of the special access market, the FCC should seek to determine whether there are special access services that are rarely if ever offered by competitive suppliers via their own facilities in any incumbent LEC service area. Services that fall into this category should be subject to price regulation in those incumbent LEC service areas where that is found to be the case. There are several different ways in which the FCC could identify these services. For example the FCC could utilize the following information in making this assessment.

⇒ The FCC could request data from carriers by incumbent LEC service area as to the lowest level of service capacity for which loop construction is normally justified if the carrier had to construct only a very short (e.g., 100 foot) loop from a splice point on the carrier's fiber transport network to the customer location. If all or the vast majority of competitive carriers surveyed state that they would never build loop

facilities to a customer that demands a certain level of demand or below (e.g., 4 DS1s or 10 MB of Ethernet), then this evidence supports the conclusion that the particular incumbent LEC has market power in all geographic areas in its service area in the provision of the services at or below the level of capacity identified by the competitors (hereafter referred to as the "Minimum Capacity to Build").

⇒ The FCC could also examine market share information, in particular geographic areas in which it would expect competition to be greatest in each incumbent LEC service area (e.g., the central core of New York, Chicago, Los Angeles) to determine the actual volume of services provided by competitors on-net in those areas. This information will enable the FCC to check the reliability of the Minimum Capacity to Build information provided by competitors. In the chosen geographic areas, if incumbent LEC market shares for services at or below the Minimum Capacity to Build exceed a specified level, this would confirm that there is little or no competition in the provision of those services anywhere in that particular incumbent LEC's service area.

Step Two: Identifying aggregated geographic markets that might be subject to effective competition. The services not identified in Step One as subject to little or no competition throughout each incumbent LEC's service area require further examination to determine whether there are geographic areas in which they might be subject to effective competition. Again, it would be impossible for the FCC to undertake this analysis for every relevant product market at every building in the US. The FCC should therefore devise a means of identifying geographic areas in which there may be a significant number of buildings subject to effective competition. The FCC can do this by devising a competitive screen, a test designed

to identify areas in which effective competition is possible. For example, the screen could use the criterion that at least two competitors have entered the market to compete with the incumbent in the provision of services provided via the competitors' own loop facilities. Geographic areas that meet the competitive screen would be deemed suitable for the granular competitive analysis discussed in Step Three below. Geographic areas that do not meet the competitive screen would be deemed to be not subject to effective competition. All special access services offered by an incumbent LEC in areas that do not meet the competitive screen would be subject to price regulation.

There are many ways in which the FCC might devise the competitive screen. One possible approach would be for the FCC to model the competitive screen (loosely based on the Ofcom analytical framework) as follows:

⇒ The FCC would ask competitive carriers (including incumbent LECs operating out of region) to provide the location of their local transport networks that are used to provide special access services (including both TDM service and Ethernet services) via the competitors' own loop facilities on a significant scale. Transport networks used solely for other purposes (such as the provision of long haul services or solely for purposes of connecting to loop facilities leased from the incumbent LEC) would not be considered for these purposes.[31] There are several ways in which the FCC could identify transport networks that are relevant to this inquiry. One possible approach would be for the FCC to require that competitors report the location of only

[31] It is important to note that a full analysis of the relevant market would include all firms with transport facilities that could in the future be used to provide special access facilities, not just those that are identified in this proposed Step Two. In the Ofcom proceedings, BT argued that Ofcom should adopt this broader approach. As a practical matter, however, the US analysis must be somewhat simplified to be manageable, and narrowing the definition of network analyzed in the manner suggested in Step Two is a reasonable means of doing so.

those local transport networks in an urban area in which the competitor: (1) serves a specified percentage of locations via its own loop facilities; or (2) has deployed a specified minimum number of loop facilities within the last 18 months. This would enable the FCC to focus its analysis solely on those competitors that actually compete in a meaningful sense with the incumbent LECs' special access channel termination services.

⇒ The FCC would then map the location of qualifying local transport networks to identify the "geographic areas" in which or adjacent to which at least two such networks are present. The FCC should use uniform, relatively small "geographic areas" for these purposes. The FCC could use zip codes or possibly incumbent LEC wire centers.

⇒ The FCC would then examine more closely the zip codes/wire centers in which or adjacent to which two or more competitive transport networks are present. It could do so by mapping the location of the competitors' splice points within the zip codes/wire centers. It would then identify those buildings in which demand exceeds Minimum Capacity to Build described in Step One. The FCC would calculate the average length of competitors' loops based on information supplied by competitors. The FCC would subsequently examine the number of different carriers' network splice points within the average loop length distance from those buildings with demand that exceeds Minimum Capacity to Build.

⇒ The FCC would repeat this exercise for each building in every zip code/wire center in which or adjacent to which two or more relevant transport provider networks are located. If, on average, two or more competitors have splice points within the

average competitor loop distance from each building within a zip code/wire center, that zip code/wire center would meet the competitive screen and would be examined more closely in Step Three.

<u>Step Three</u>: Granular analysis of competition within zip codes/wire centers that meet the competitive screen. The FCC would examine those zip codes/wire centers which passed the competitive screen more closely by examining the competitive conditions in the zip code/wire center. Where wire centers/zip codes are contiguous, the analysis would be performed for all such contiguous wire centers/zip codes.

⇒ Product Markets. The FCC would need to define product markets for purposes of this analysis for each incumbent LEC service area. Following are some suggestions as to how it could do so.

- For TDM-based services:

  - The FCC could follow the Ofcom methodology. Ofcom defined TDM product markets based on the capacity levels at which it is efficient for customers to switch to the next highest level of bandwidth.

  - The lowest capacity product market would be defined as the transmission capacity range from just above the Minimum Capacity to Build level up to and including a single DS3 (e.g., 45 Mbps). The next product market would range from above a DS3 up to and including an OC3 (e.g., 155 Mbps).

        - Product markets above an OC3 could be determined by examining market shares within each incumbent LEC service area for different levels of OCn service.

    - For Ethernet services

        - The FCC should consider using the cost of the equipment as Ofcom did as the basis for defining Ethernet product markets.

⇒ The FCC could consider the following information to determine whether a relevant product market is competitive within a wire center/zip code.

    - The extent to which competitors have actually deployed loop facilities to buildings in the zip code/wire center.

    - Incumbent market share and changes in market share over time.

    - Incumbent margins (e.g., for TDM service, by comparing special access prices to UNE prices).

    - Incumbent prices relative to competitor prices (wholesale vs. wholesale).

    - Whether incumbent wholesale prices are higher than competitors' retail prices (this is especially relevant for Ethernet).

    - Whether the incumbent is offering lower prices within the area that met the screen vs. adjacent areas.

- The extent to which the service can be provided over the incumbent's existing infrastructure (e.g., can incumbents almost always provide DS3s and or lower bandwidth Ethernet over copper without any additional expenditure if they so choose?).

- Whether the incumbent has inherent advantages in scale and scope providing the service.

VIII. CONCLUSION

If the Commission were to analyze the product and geographic markets using a competition law-based analysis, the Commission would find that ILECs are dominant in a number of bandwidth ranges for TDM and Ethernet-based special access. The Commission must apply regulatory remedies and obtain the necessary underlying accounting and price data to apply and enforce remedies. The Commission must move speedily and effectively in gathering the data necessary to analyze the markets and apply regulatory remedies. Most importantly, the Commission must not allow itself to be distracted by more claims that effective competition is about to emerge or that supra-competitive margins are necessary to secure ILEC investment in fiber-based broadband. Competition is the best method of securing investment and innovation. This has been borne out by experience and by the Berkman Center's study on broadband commissioned by the FCC.

Respectfully submitted,

BT AMERICAS INC.

By: _____

A. Sheba Chacko
Head, Global Operational Regulation and
Americas Regulation - BT Global Services
BT AMERICAS INC.
11440 Commerce Park Drive
Reston, Virginia 20191

Dated: January 19, 2010

APPENDIX – DESCRIPTIONS OF RETAIL AND WHOLESALE LEASED LINE SERVICES USED IN THE UK

GLOSSARY

AISBO or alternate interface symmetric broadband origination – Refers in the BCMR primarily to Ethernet access and backhaul services from a customer's premise to a competing provider's point of connection ("POC").

Leased line – A dedicated circuit connecting one customer premise to another. See Figures 2.1 and 2.2.

OCP – Other competing provider.

Partial Private Circuit ("PPC") – Part of a TDM-based leased line consisting of: (i) local loop from the customer premises to the nearest local serving exchange; and (ii) backhaul between exchanges to a point of handover (POH) connecting to a competing provider's network. A PPC may also include an intercity trunk connection if the point of handover is located in a city other than that in which the customer's premises is located. An intracity PPC is equivalent to a TDM-based special access circuit. See Figure 2.3.

PDH or Plesiochronous Digital Hierarchy – An older method of digital transmission used before SDH which requires each stream to be multiplexed or de-multiplexed at each network layer and does not allow for the addition or removal of individual streams from larger assemblies. PDH lines use TDM technology.

POC – Point of connection where one communications provider interconnects with another communications provider for the purposes of connecting their networks to third party customers.

Local End – Connection between a customer's premises and the first serving local exchange (LSE).

LSE – Local serving exchange

RBS backhaul – Wireline symmetric TDM-based connection between a radio base station ("RBS") and the point of connection to a mobile operator's mobile switching center. See Figure 2.6.

SDH or Synchronous Digital Hierarchy – A method of digital transmission where transmission streams are packed in such a way to allow simple multiplexing and de-multiplexing and the addition or removal of individual streams from larger assemblies. SDH lines also use TDM technology. The US equivalent is SONET technology.

SBO – Symmetric broadband origination consisting of TDM or Ethernet access and backhaul.

TI – Traditional interface consisting of Synchronous Digital Hierarchy (SDH) or Plesiochronous Digital Hierarchy.

Tier 1 – A tier in BT's SDH network that denotes a network of nodes covering areas of high population. These nodes are connected by very high capacity line systems and denote the BT intercity trunk network.

TISBO or traditional interface symmetric broadband origination – These are TDM-based access and backhaul circuits providing symmetric capacity from a customer's premise.

WES -- A wholesale Ethernet product that can be used to link a customer premise to a node in a communications network. See Figure 2.4.

WES A – A wholesale Ethernet connection between the customer premise and the first local serving exchange. See Figure 2.5.

WES B – A wholesale Ethernet connection from the first serving exchange to the competing provider's point of connection. See Figure 2.5.

Figure 2.1: Retail TI Leased Line

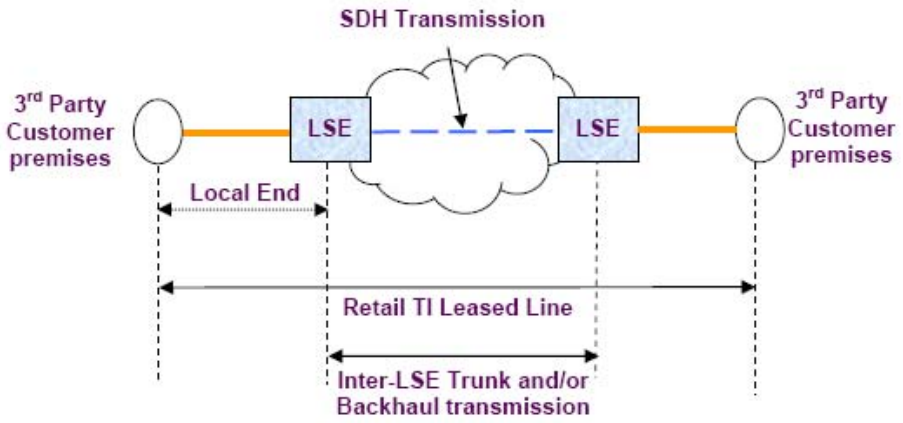

A retail TI leased line provides dedicated symmetric transmission at a range of bandwidths between two 3rd party customer premises. The 3rd party customer premises are linked to the Local Serving Exchanges (LSE) via copper or fiber-optic pair local ends with SDH or PDH transmission being used to provide the link between the customer premises.

Figure 2.2: Retail AI Leased Line

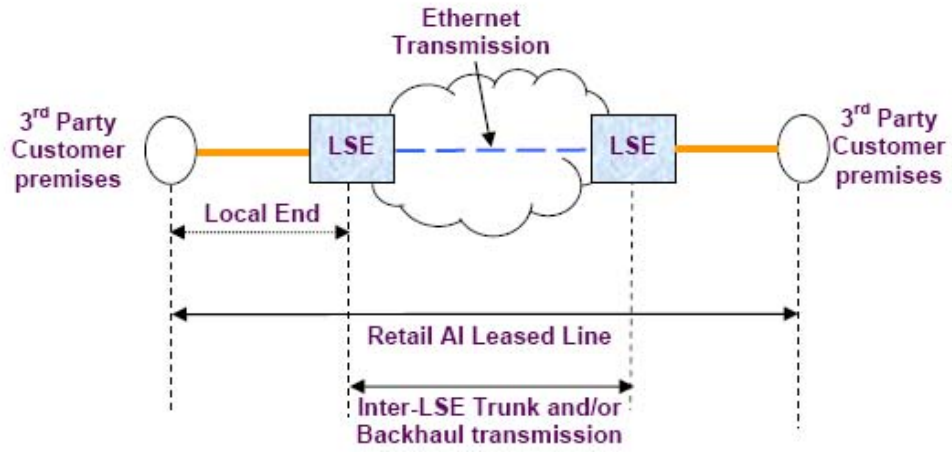

At the wholesale level, there are a variety of services that can be used an input into downstream retail TI and AI leased lines markets.

Figure 2.3: Partial Private Circuit (PPC)

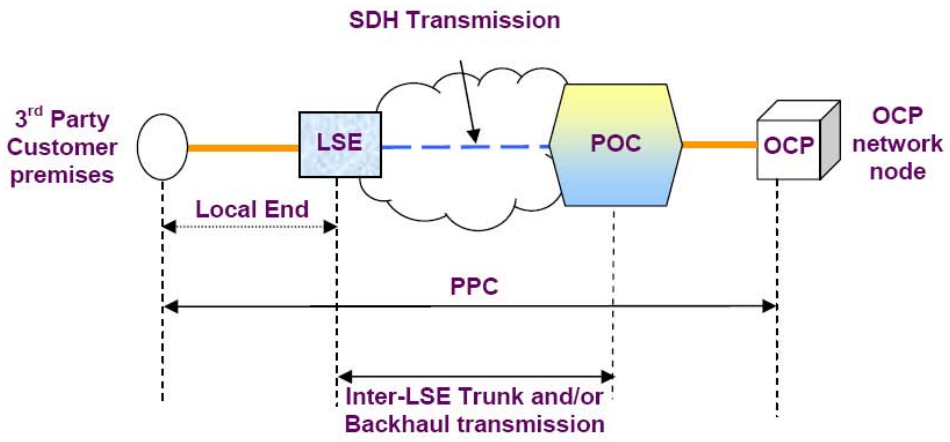

Partial Private Circuits (PPCs) are the most widely used wholesale leased line in the UK. PPCs provide dedicated symmetric transmission at a range of bandwidths between a 3rd party customer premise and an OCP's network via a Point of Connection (POC). The 3rd party customer premises are linked to the Local Serving Exchanges (LSE) via copper or fiber-optic pair local ends with SDH or PDH transmission being used to provide the link between the customer premises and the POC. A PPC can further be divided into a terminating segment and a trunk segments, with the latter providing connectivity between major aggregation, or trunk, nodes.

Increasingly important for businesses in the UK and abroad are wholesale Ethernet services. These services are available in a variety of different options, depending on whether the purchaser wishes to self provide some of the retail services using its own network, and what element it wishes to self provide.

Figure 2.4: Wholesale Extension Service (WES)

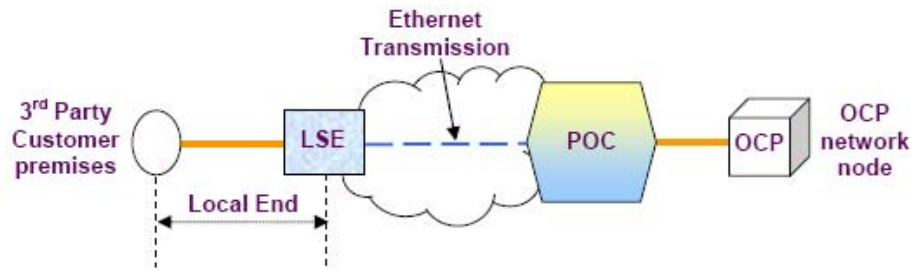

A Wholesale Extension Service (WES) provides dedicated symmetric transmission at a range of bandwidths between a 3rd party customer premise and an OCP's network node. The service is provided via a fiber-optic local end using Ethernet transmission and often includes transmission between the LSE and the OCP's POC provided using a dedicated fiber-optic pair.

Figure 2.5: WES Access (WES A) and WES Backhaul (WES B)

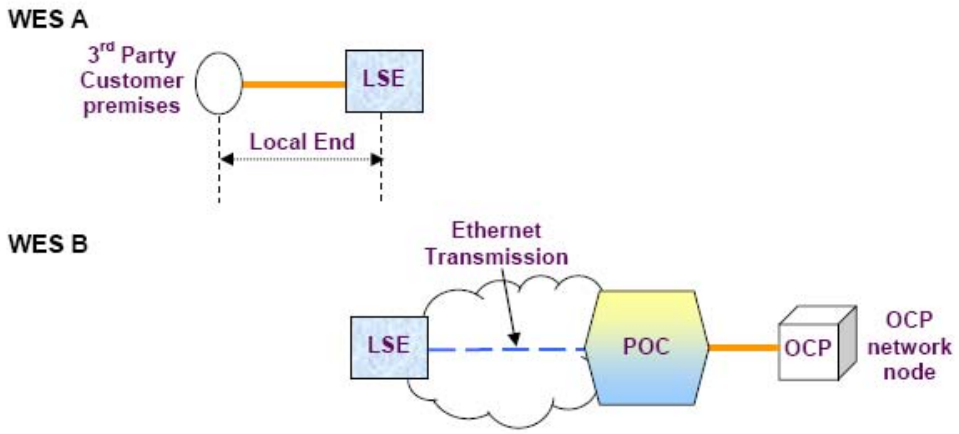

A WES Access (WES A) service provides dedicated symmetric transmission at a range of bandwidths between a 3rd party customer premise and a Local Serving Exchange (LSE). The service is provided via fiber-optic local ends using Ethernet Transmission.

A WES Backhaul (WES B) service provides dedicated symmetric transmission at a range of bandwidths between a Local Serving Exchange (LSE) and an OCP's network node. The service is provided via fiber-optic local ends using Ethernet transmission.

Figure 2.6: RBS Backhaul

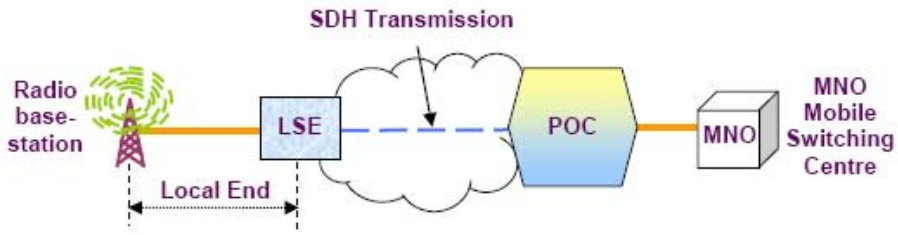

An RBS backhaul circuit provides dedicated symmetric transmission at a range of bandwidths between a Mobile Network Operator's (MNO's) radio base station and the MNO's network via a Point of Connection (POC) at the MNO's Mobile Switching Centre (MSC). The base-station is linked to the Local Serving Exchanges (LSE) via copper or fiber-optic pair local ends with SDH or PDH transmission being used to provide the link between the radio base station and the POC.