REDACTED -- FOR PUBLIC INSPECTION

WILLKIE FARR & GALLAGHER LLP

1875 K Street, NW
Washington, DC 20006

Tel: 202 303 1000
Fax: 202 303 2000

DOCKET FILE COPY ORIGINAL

FILED/ACCEPTED

FEB 24 2010

Federal Communications Commission
Office of the Secretary

February 24, 2010

Ms. Marlene H. Dortch
Secretary
Federal Communications Commission
Room TW-325
445 12th Street, S.W.
Washington D.C. 20554

Re: In the Matter of Special Access Rates for Price Cap Local Exchange Carriers, WC Docket No. 05-25

Dear Ms. Dortch:

On behalf of BT Americas Inc., please find enclosed two copies of the redacted version of reply comments filed today in the above-referenced docket pursuant to the protective order in this proceeding.[1] An electronic copy of the redacted version of the reply comments has also been filed electronically via ECFS. Two copies of the confidential version of the reply comments have also been provided to Margaret Dailey under separate cover. One copy of the confidential version of the reply comments has also been filed with the Secretary's Office under separate cover.

Please let us know if you have any questions with respect to this submission.

Respectfully submitted,

Thomas Jones
Jonathan Lechter

WILLKIE FARR & GALLAGHER LLP
ATTORNEYS FOR BT AMERICAS INC.

No. of Copies rec'd 0+1
List ABCDE

[1] *Special Access Rates for Price Cap Local Exchange Carriers*, Order, 20 FCC Rcd 10160 (2005).

REDACTED - FOR PUBLIC INSPECTION

Writer's Direct Dial: 703.755.6730
Facsimile Number: 703.755.6740
Sheba.Chacko@bt.com

February 24, 2010

Via Electronic Filing and Hand Delivery

FILED/ACCEPTED

FEB 24 2010

Federal Communications Commission
Office of the Secretary

Ms. Marlene H. Dortch
Secretary
Federal Communications Commission
445 12th Street, S.W.
Washington, DC 20554

RE: Special Access Rates for Price Cap Local Exchange Carriers, WC Docket No. 05-25; AT&T Corp. Petition for Rulemaking to Reform Regulation of Incumbent Local Exchange Carrier Rates for Interstate Special Access Services – RM-10593

Dear Ms. Dortch:

BT Americas Inc. ("BTA") files this reply comment letter in the above-captioned docket on behalf of itself and BT plc's other wholly owned indirect U.S. subsidiaries (hereinafter referred to as "BT"). In this letter BT suggests additional ways in which the Commission can further simplify its market power analysis of special access services. In addition, BT refutes Bell claims that DSn services are unimportant to the enterprise market. BT also appends Ofcom's decision regarding its review of the UK business connectivity market ("BCMR Statement and Consultation"). See Appendix 1.

Simplification of the Market Power Analysis

In its Comments, BT suggested the FCC adopt a competitive screen for the purpose of identifying areas in which it would be appropriate to conduct a detailed market power analysis.[1] As BT explained, the FCC could do so by identifying geographic areas (such as zip code areas or wire centers) in which commercial buildings are, on average, close to two or more competitive transport networks.[2] The Commission can assume that the incumbent LEC possesses market power in zip codes/wire centers that do not meet the threshold of two or more proximate transport networks. In other words, the presence of a minimum of three players – the incumbent and two competitive providers – must exist in a geographic area for the Commission to proceed to the next stage of analysis which is whether and to which extent the incumbent LEC has market power in the provision of special access services.[3] Furthermore, a precondition for finding that an incumbent LEC does not have market power is that wholesale special access and backhaul services must be available from a minimum of three providers in the geographic area.

[1] *See* Comments of BT Americas at 26-27.

[2] *See id.* at 27-29.

[3] *See id.*

Although application of the competitive screen will enable the FCC to narrow the geographic scope of its analysis, it is possible that the zip codes/wire centers that meet the screen will be too numerous for the FCC to analyze closely. If this is the case, it will be necessary for the FCC to undertake the granular market power analysis in only a subset of geographic areas and then apply the conclusions of those analyses to other, similarly-situated geographic areas.[4] The FCC could do so as follows.

First, the FCC would need to define broad categories of zip codes/wire centers. A category should include only those zip codes/wire centers that are subject to similar levels of competition. Moreover, similar levels of competition should be determined based on the average number of competitor transport networks near commercial buildings in a wire center. For example, separate categories of zip codes/wire centers could be established for those in which commercial buildings are, on average, near to: (1) between two and three competitive transport networks, (2) between three and four competitive transport networks, and (3) four or more competitive transport networks. The FCC will need to conduct a granular market power analysis in a range of zip codes/wire centers subject to different levels of competitive entry before it can establish firm definitions of zip code/wire center categories. Such analyses may indicate that the categories should be defined more narrowly (e.g., it may be necessary to establish a category of zip codes/wire centers with average proximity to between 2.0 and 2.5 competitive networks), more broadly (e.g., by combining categories (1) and (2) above) or with entirely different cutoff points (e.g., it may be necessary to establish a category of zip codes/wire centers with average proximity to between 2.5 – 3.5 competitive transport networks).

Second, once the FCC has defined categories of zip codes/wire centers, it can perform a granular market power analysis in a representative subset of the zip codes/wire centers within each category. Because each category includes areas subject to similar levels of competition, the results of the competitive analysis in the representative sample of zip codes/wire centers can be applied to all of the zip codes/wire centers in the same category. In this manner, the FCC can undertake a detailed, meaningful market power analysis in a manageable number of areas while at the same time ensuring that the conclusions of such analyses apply only where appropriate.

[4] In a declaration filed with the Sprint Comments, Dr. Bridger Mitchell proposed a means of conducting a market power analysis in a representative subset of broad categories of similarly-situated wire centers. *See* Declaration of Bridger M. Mitchell, ¶¶ 38-49, submitted as an Appendix to the Comments of Sprint Nextel. Dr. Mitchell suggested using the wire center categories the FCC adopted for loop and transport unbundling requirements for this purpose.

Importance of DSn services to the enterprise market

The Bells assert that DS-1 and DS-3 services will be unimportant for bandwidth needs in the near future and hence the Commission should ignore these products for the purposes of its analysis. This assertion is completely inconsistent with BT's experience serving the needs of top global Fortune companies in the U.S. In BT's experience **[confidential begin] [confidential end]** [5] BT orders to connect such companies' locations in the U.S. to their global VPNs are DS-1 and DS-3 circuits. **[confidential begin] [confidential end]** For years, BT has sought and continues to seek Ethernet alternatives, but in BT's experience, Ethernet access services do not and are unlikely to constitute a significant portion of global corporations' access spend in the U.S. in the near future because of two hurdles. First, Ethernet services are generally unavailable in the U.S. outside metro markets. The absence of Ethernet in these areas is important because global corporations have connectivity needs in suburban, exurban and rural locations as well as in core metro areas. Second, even where Ethernet services are available, the incumbent LECs charge prices that are unconstrained by either regulation or significant competition. As a result, the incumbent LECs' prices are often higher on a per megabit basis than even bonded DS-1 or DS-3 services.. For both these reasons, BT does not expect major corporations to radically change their mix of access requirements from DSn services to Ethernet services in the near future.

BT also appends at Appendix 1 Ofcom's analysis of the business connectivity market in the U.K.

If you have any questions regarding matters discussed herein, please contact the undersigned.

Respectfully submitted,

Sheba Chacko

Head, Global Operational Regulation and Americas Regulation - BT Global Services

[5] **[confidential begin] [confidential end]**

APPENDIX 1

REDACTED - FOR PUBLIC INSPECTION

Ofcom
OFFICE OF COMMUNICATIONS

Business Connectivity Market Review

Review of the retail leased lines, wholesale symmetric broadband origination and wholesale trunk segments markets

Statement
and
Consultation

Publication date: 8 December 2008

Closing Date for Responses: 13 January 2009

Contents

Section		Page
1	Summary	3
2	Introduction	13
3	Retail product market definition	24
4	Retail geographic market definition	52
5	Wholesale product market definition	56
6	Wholesale geographic market definition	89
7	SMP assessment	143
8	Regulatory remedies and impact assessment	180

Annex		Page
1	Responding to this consultation	309
2	Ofcom's consultation principles	311
3	Consultation response cover sheet	312
4	Consultation question	314
5	List of respondents to the July 2008 consultation	315
6	Geographic analysis	316
7	Aggregation nodes and geographic trunk analysis	330
8	SMP Conditions and Directions	364
9	Reassurance letters and voluntary undertakings	519
10	Notification in relation to the market for high bandwidth AISBO in the Hull area	520
11	Glossary	522

Section 1

Summary

Introduction

1.1 This Statement sets out the main conclusions of our review of the retail and wholesale markets for leased lines in the UK. The present review supersedes the Leased Lines Market Review carried out by Ofcom in 2003/04 (the 2003/04 Review), the findings of which were set out in a statement published in June 2004[1].

1.2 Leased lines, or private circuits as they are also known, provide dedicated transmission capacity between customer sites, which can be used to carry voice, data and video traffic. Leased lines fall into two broad categories, namely Traditional Interface (TI)[2] and Alternative Interface (AI)[3]. A further distinction is frequently drawn between the trunk and terminating segments of a wholesale leased line, the former being the long distance component of the circuit and the latter being the segments at each end of the circuit which connect to the customer site.

1.3 At the retail level, sales of leased lines are worth about £1 billion a year. They are used by businesses and public sector organisations to build their own communications networks, which in turn play an increasingly important role in the overall functioning of the UK economy. At the wholesale level, leased lines are purchased by other Communications Providers (CPs) and are used as inputs into a wide range of downstream services, including broadband and mobile services, and business connectivity services such as virtual private networks, as well as retail leased lines.

1.4 The preliminary findings of our review were set out in a consultation document published in January 2008 entitled *Business Connectivity Market Review, Review of the retail leased lines, wholesale symmetric broadband and wholesale trunk segments* [4] (the January 2008 consultation). Having considered the responses to the January 2008 consultation, we published a further consultation document in July 2008 entitled *Business Connectivity Market Review, Review of the wholesale very high bandwidth symmetric broadband origination markets*[5] (the July 2008 consultation) where we set out a set of revised proposals for some of the wholesale leased lines markets.

1.5 We have now reached a conclusion on nearly all of the markets considered in the review. The exception is the wholesale market for the high bandwidth AI circuits in Hull, where we have amended our previous proposal in the light of some recently received information. For this market alone, we are consulting on a new proposal, which is that no CP has significant market power (SMP) in the market, and that no ex ante regulation should therefore apply.

---

[1] http://www.ofcom.org.uk/consult/condocs/llmr/statement/

[2] TI circuits include analogue circuits and digital circuits that use Synchronous Digital Hierarchy (SDH) or Pleisynchronous Digital Hierarchy (PDH) transmission.

[3] AI circuits are digital circuits which use other forms of transmission, generally Ethernet.

[4] http://www.ofcom.org.uk/consult/condocs/bcmr/

[5] http://www.ofcom.org.uk/consult/condocs/bcmr_tisbo/

1.6 In reaching our conclusions, we have looked for opportunities to deregulate where markets conditions warrant it, in line with our statutory obligation to ease the burden of regulation. With this objective in mind, we have, for example, deregulated the markets for low and high bandwidth TI terminating segments in the Central and East London Area, and the market for high bandwidth AI terminating segments in the UK excluding Hull. On the other hand, we have proposed additional regulatory obligations where required to protect consumer interests and promote effective competition. To this end we have, in particular, proposed extending the scope of charge controls to include trunk segments and low bandwidth AI terminating segments.

1.7 This review has been carried out in accordance with the requirements of the European regulatory framework and the Communications Act 2003. Full account has also been taken of the European Commission's (the Commission) relevant guidelines and recommendations and the relevant guidelines produced by the European Regulators' Group.

The 2003/04 review and the current regulatory obligations

1.8 The 2003/04 Review focused on the retail market for low bandwidth TI leased lines, the wholesale markets for low and high bandwidth TI terminating segments and the wholesale market for AI circuits at all bandwidths. In each of these markets, Kingston Communications ('KCOM') was found to have SMP in the Hull area, and BT was found to have SMP in the rest of the UK. BT was also found to have SMP in the UK market for trunk segments. Based on these findings, a number of SMP obligations were imposed on BT and KCOM, including obligations to supply, requirements not to discriminate unduly between customers, requirements to publish terms and conditions, and in some cases price controls.

Market definitions

Retail product markets

1.9 The first task in a market review is to define the markets under consideration, first at the retail level and then at the wholesale level. Our retail market definitions are in many respects similar to those identified in the 2003/04 review.

1.10 As in 2004, we found that TI and AI leased lines continue to fall in separate markets. Although there is evidence of increasing substitution between TI and AI products, the evidence on relative pricing and patterns of demand does not suggest that the degree of substitutability is sufficient to place them in the same market. In addition, we have concluded that leased lines and Virtual Private Networks (VPNs) are in separate markets, and that the market for leased lines includes SDSL but not ADSL services. In view of their specialised nature, we do not consider Wave Division Multiplex-based retail services to be part of the market for leased lines.

1.11 However, we have concluded that additional bandwidth categories should be defined for very high bandwidth TI and high bandwidth AI circuits, over and above those identified in 2004. The full list of retail product markets is now as follows:

- Low bandwidth, including analogue and digital TI services at speeds up to and including 8Mbit/s;
- High bandwidth TI services at speeds above 8Mbit/s, up to and including 45Mbit/s;

- Very high bandwidth TI services at speeds over 45Mbit/s up to and including 155Mbit/s;
- Very high bandwidth TI services, at speeds over 155Mbit/s;
- Low bandwidth AI services at speeds up to and including 1Gbit/s; and
- High bandwidth AI services at speeds over 1Gbit/s.

Retail geographic markets

1.12 Our analytical framework for assessing the geographic extent of markets focuses, in particular, on geographic variations in competitive conditions and the presence of common pricing constraints.

1.13 We consider that, as in 2004, a local geographic market exists in the Hull area for retail leased lines and that there is a national retail market for low bandwidth TI services, covering the rest of the UK. We have not reached definitive conclusions on the geographic scope of the other retail markets for leased lines, as this market review is primarily concerned with assessing competition in wholesale markets.

Wholesale product markets

1.14 To a large extent, our findings in relation to wholesale product markets reflect those for retail product markets, as summarised above. In addition we have concluded that:

- Combined markets exist for wholesale access and backhaul products, as in general CPs are likely to continue to purchase access and backhaul together. These markets are referred to as TI Symmetric Broadband Origination (TISBO) and AI Symmetric Broadband Origination (AISBO);
- Unbundled Local Loop (LLU) and Radio Base Station (RBS) backhaul circuits fall within the related AISBO and TISBO markets respectively; and
- There is a separate market for SDH/PDH trunk segments but that a separate market for Ethernet trunk is unlikely to emerge until the roll-out of carrier class Ethernet.

Wholesale geographic markets

1.15 As in the case of retail markets, we have concluded that separate geographic markets for wholesale leased lines exist in the Hull area. In the rest of the UK, we have found the markets to be national in scope, with two exceptions. The exceptions relate to the markets for high bandwidth 34/45Mbit/s and very high bandwidth155Mbit/s TISBOs. In these cases, we have found that separate geographic markets exist in a newly defined Central and East London Area (CELA), and the rest of the UK (excluding Hull). The CELA corresponds broadly to the London congestion charging zone and Docklands.

1.16 We have defined the market for TI trunk segments on the basis of a list of 46 "aggregation nodes", which correspond to major population and business centres. For AI circuits, the geographic boundary of the market for terminating segments has been defined with reference to 56 aggregation nodes, corresponding to locations at which other communications providers (OCPs) are likely to interconnect as BT rolls out its 21st Century network.

SMP analysis

1.17 Having defined the relevant markets, the second task in a market review is to consider whether any provider has SMP. Our findings for the various markets are set out below.

Markets outside the Hull area

Retail market for low bandwidth TI leased lines

1.18 We have concluded BT has SMP in this market. In reaching this view, we have been influenced by a range of factors, including the following:

- BT's high market share (80% by volume in 2006);
- BT's apparent high profitability and high pricing of these services;
- BT's control of infrastructure which is not easily duplicated; and
- BT's ability to exploit economies of scale and scope.

1.19 We consider that the impediments to competition largely arise as a result of upstream bottlenecks. BT's retail services are not yet replicable by BT's competitors, because of the deficiencies in BT's wholesale products identified in our Replicability Statement of April 2006[6]. BT has recently made further submissions to us in respect of replicability and we expect to publish a further consultation on this issue in the early part of 2009.

1.20 At some point in the future, after our replicability concerns have been fully addressed, it may be possible to deregulate this market. However, it cannot be assumed that improvements in the effectiveness of upstream remedies will deal with all the competition concerns in the downstream market immediately – it is likely to take some time for them to feed through to effective competition at the retail level. We therefore consider that BT is likely to retain SMP for the duration of this market review. We will, however, monitor developments in the market and initiate a further review if the evidence suggests that is warranted.

Wholesale market for low bandwidth TISBOs

1.21 We have concluded that BT has SMP in this market, for reasons which are similar to those which apply in the associated retail market. BT has had a persistently large share of the market (89% by volume in 2006) and has a ubiquitous national network which is not easily duplicated. The market is characterised by high sunk costs and significant economies of scale and scope, which act as barriers to market entry and expansion. Our view is that the characteristics of this market, and BT's position within it, are unlikely to change markedly during the four year period considered in this review.

Wholesale market for high bandwidth TISBOs in the UK excluding excluding the CELA

[6] http://www.ofcom.org.uk/consult/condocs/busretail/statement/statement.pdf

1.22 We consider that BT has SMP in this market, for broadly similar reasons to those which apply in the low bandwidth market. OCPs have informed us that it is not economical for them to expand beyond their current size in this market. New network build is generally only economical if very short lines are required and if there are no other impediments to competition (e.g. the need to obtain way-leaves).

1.23 BT's dominant position in this market is reflected in its BT's persistently high market share (45 per cent in 2006). There is no evidence to suggest that this market is prospectively competitive, in part because our discussions with the operators that acquire these services indicate that this market is unlikely to grow in the future. This is likely to prevent BT's wholesale competitors expanding to a scale where they can operate as efficiently as BT.

Wholesale market for very high bandwidth 155Mbit/s TISBOs in the UK excluding the CELA

1.24 We have concluded that BT has SMP in this market, for reasons similar to those which apply in low and high bandwidth markets. We have also taken account of the responses to the January 2008 consultation, in which several OCPs including Mobile Network Operators (MNOs) argued that 155 Mbit/s TISBOs are only supplied in competitive conditions in some metropolitan areas, and that in the rest of the UK there is no realistic alternative to BT.

Wholesale markets for high bandwidth TISBOs and very high bandwidth 155Mbit/s TISBOs in the CELA

1.25 We have found that no company has SMP in these two CELA markets and that these markets are effectively competitive.

1.26 Colt has the largest share of these markets, with 46% of high bandwidth circuits and 55% of very high bandwidth 155Mbit/s circuits in 2006. However, we do not consider that Colt has SMP in these markets. In reaching this view, we have taken account of the following factors:

- When compared to BT, Colt can be regarded as a new entrant, having built the first part of its network in London in 1993. Colt's position has been built up by competing against BT and others, and is not the result of it having significant advantages in terms of infrastructure that is not easily duplicated. Colt's success in the market illustrates the fact that the high customer density in the London area makes entry easier than in the rest of the UK; and

- There are a number of companies which have extensive networks in the CELA, including Cable & Wireless and another CP, as well as Colt and BT. The CELA has been defined such that there are at least three network operators within 200m of large business sites within each postal sector. As a result, it is unlikely that any one of these operators will have significant cost advantages over the other operators through having control of infrastructure.

Wholesale market for very high bandwidth TISBOs, at speeds over 155Mbit/s

1.27 We consider this market to be effectively competitive. While we recognise that competitive conditions may vary across the UK, it is likely that demand for 622 Mbit/s circuits will be concentrated in areas where other CPs can compete with BT. Given

BT's low market share, and the low level of concentration in this market, we think it unlikely that the position will change materially within the timeframe of this review

Wholesale market for low bandwidth AISBOs

1.28 We have concluded that BT has SMP in the low bandwidth AISBO market outside the Hull area. This conclusion is based primarily on BT's persistently high market share (73% by volume in 2006); the high profitability of the relevant services (around 30% Return on Capital Employed in 2007/08); the advantages enjoyed by BT due to its much more extensive network infrastructure; and the barriers to entry and expansion in this market, which are associated with high sunk costs and the availability of economies of scale and scope.

Wholesale market for high bandwidth AISBOs

1.29 We do not consider that BT, or any other operator, has SMP in this market. While still relatively high at around 38% to 40%, BT's market share has been falling and there is no evidence to indicate that this trend will reverse in the near future. In addition, there has been significant entry in the market in the recent past, and we are aware of likely future entry. The evidence suggests that the very high revenues that can be earned from these circuits mean that CPs are generally willing to sink the high fixed costs required to provide them.

1.30 We recognise that this market is continuing to develop and that demand is likely to increase over the period of the market review. However, we do not have any evidence which suggests that this demand is likely to grow markedly outside geographic areas with a concentration of large business sites. On this basis, we conclude that there is no operator with SMP in this market. We intend, however, to keep developments in this market under review and will carry out a further review if the evidence indicates that is warranted.

The UK market for wholesale TI trunk segments

1.31 We conclude that BT has SMP in this market, for reasons similar to those which apply in other wholesale markets. In particular, BT has a persistently high market share, estimated to be in the range of 58% to 86% in 2006, and the profitability of BT's trunk services has been high in recent years. Following a recent restatement, the ROCE on these services was 45% in 2006/07 and 67% in 2007/08, well above the 11.4% cost of capital estimated for BT in 2005[7].

1.32 We consider that the SMP that presently characterises the market is likely to remain for the period considered by this review. We have not been able to identify any developments that would reduce the high structural barriers to entry and expansion that characterise the market, or which would generate sufficient competitive pressure within the relevant timeframe to alter the current finding of SMP.

Markets in the Hull area

1.33 We have concluded that KCOM has SMP in the following markets in the Hull area:

[7] See Ofcom's August 2005 statement *Ofcom approach to risk assessment in the cost of capital*. Also see Current Cost Financial Statements for 2007 including Openreach Undertakings, pages 70 and 71, "applicable rate of return on capital" column for TI and AISBO services. See:

http://www.btplc.com/Thegroup/Regulatoryinformation/Financialstatements/2007/CurrentCostFinancialStatements.pdf

- The wholesale market for low bandwidth TISBOs;
- The wholesale market for high bandwidth TISBOs;
- The wholesale market for very high bandwidth 155Mbit/s TISBOs; and
- The wholesale market for low bandwidth AISBOs.

1.34 These findings are based primarily on:

- KCOM's high market shares, which range from at least 51% in the low bandwidth TISBO market to 98% in the very high bandwidth 155Mbit/s TISBO market;
- The ubiquity of KCOM's infrastructure and the fact that it is not easily duplicated;
- KCOM's ability to exploit economies of scale and scope; and
- The existence of significant barriers to entry and expansion, including as a result of sunk costs.

1.35 We have not identified any developments that would serve to reduce the high barriers to entry that characterise these markets and therefore consider that the factors giving rise to SMP are likely to continue to apply over the period considered by this review.

1.36 On the other hand, we have concluded that KCOM no longer has SMP in the market for retail low bandwidth TI leased lines in the Hull area. In addition, we have found that no company has SMP in the wholesale market for very high bandwidth TISBOs at speeds over 155Mbit/s. There are currently no circuits of this kind in the Hull area.

1.37 In the January 2008 consultation, we set out our preliminary view that KCOM had SMP in the wholesale market for high bandwidth AISBOs. However, it has since become apparent that there are no high bandwidth AISBO circuits in Hull. We are therefore proposing to amend our finding in this market, and are now proposing that no company has SMP. We would welcome stakeholders' views on this provisional conclusion.

Remedies

1.38 The third and final task in a market review is to impose appropriate regulatory obligations on those found to have SMP. The purpose of those obligations is to ensure that the SMP operators do not exploit their market power to the detriment of consumers, and to promote fair and effective competition, both in downstream markets and where feasible in the markets concerned.

1.39 We have decided to impose a range of obligations on BT and KCOM in the markets in which they have been found to have SMP. While the obligations are in many respects similar to those imposed following the 2003/04 Review, there are a number of significant changes, including:

- The proposed extension of charge controls to cover low bandwidth AISBO and TI trunk services, in addition to low and high bandwidth TISBOs. In proposing a charge control for low bandwidth AISBO services, we have taken account of the fact that this is now a mature market, in which BT has a position of persistent dominance and is earnings high returns. BT's returns in the trunk market have

also been high and, contrary to our expectations at the time of the 2003/04 review, this market has not become increasingly competitive over time;

- Voluntary undertakings provided by BT in relation to the supply and pricing of analogue and sub-2Mbit/s retail circuits; and

- A voluntary undertaking from KCOM in respect of the pricing of its TISBO services.

1.40 The full list of SMP obligations is set out below.

Markets outside the Hull area – SMP conditions on BT

Retail analogue and low bandwidth digital TI leased lines

1.41 BT shall be subject to the following obligations in this market:

- Obligation to provide: BT should be required to supply existing and new 2 Mbit/s retail low bandwidth leased lines to third parties on reasonable request. The supply of analogue and low bandwidth digital circuits up to 2 Mbit/s will be addressed through a voluntary undertaking, as referred to below;

- No undue discrimination: For all analogue and digital services at speeds up to and including 8 Mbit/s, a requirement not to unduly discriminate; and

- Obligation to publish a reference offer: For all analogue and digital services of speed up to and including 2 Mbit/s, a requirement to publish prices, terms and conditions, and to notify on the same day of entering into force any changes to those prices terms and conditions.

1.42 In addition, we have also accepted the following voluntary undertakings from BT[8]:

- that it will continue to supply new analogue retail circuits until 1 January 2011 or earlier if, subject to industry agreement and consent by Ofcom, the underlying platform is closed at an earlier date;

- that it will continue to supply new sub-2Mbit/s retail circuits until 1 January 2011 or earlier if, subject to industry agreement and consent by Ofcom, the underlying wholesale products are withdrawn from new supply at an earlier date;

- that it will not increase its prices for analogue services more quickly than the rate of inflation (RPI-0%) for a period two years following the publication of the Business Connectivity Market Review Statement i.e. from 2008 to 2010; and

- that it will commit to a further two-year cap, the level of which would be agreed with Ofcom prior to 2011.

1.43 If BT fails to adhere to its pricing commitment, or if BT and Ofcom should fail to reach agreement on the two-year cap for 2011-12, a cost orientation condition in relation to the price of analogue services would then come into effect.

[8] The letter setting out these undertakings is reproduced in Annex 9.

Wholesale markets for low bandwidth TISBOs, high bandwidth TISBOs in the UK excluding the CELA, very high bandwidth 155Mbit/s TISBOs in the UK excluding the CELA, wholesale low bandwidth AISBOs and Wholesale TI trunk segments

1.44 BT shall be subject to the following obligations in these markets:

- an obligation to provide Network Access;
- a requirement not to unduly discriminate;
- an obligation to ensure that charges are reasonably derived from the costs of provision;
- requirement to publish a reference offer;
- an obligation to give 90 days notice of changes to prices, terms and conditions for existing services;
- an obligation to give 28 days notice of the introduction of prices, terms and conditions for new services;
- a requirement to publish quality of service information;
- a requirement to notify technical information with 90 days notice; and
- obligations relating to requests for new network access.

1.45 In addition, in the wholesale market for low bandwidth AISBO, BT will be subject to a Direction in relation to Service Level Guarantees (SLGs), which re-imposes under the new SMP Conditions the SLG Direction set out in Ofcom's SLG Statement published on 20 March 2008[9].

1.46 In the wholesale TISBO and trunk segments markets where BT has been found to have SMP, BT will be subject to a Direction under the general access condition to provide Partial Private Circuits (PPCs) and Radio Base Station backhaul (RBS backhaul).

1.47 In all wholesale markets where it has been found to have SMP, BT will be obliged to provide certain interconnection and accommodation products which will be subject to the remedies set out above in relation to each of these markets.

Markets in the Hull area – SMP conditions on KCOM

Wholesale low, high and very high bandwidth 155 Mbit/s TISBO

1.48 The following regulatory obligations shall apply to KCOM in these markets:

- a requirement to provide network access on reasonable request;
- a requirement not to unduly discriminate;

[9] *Service level guarantees: incentivising performance*, 20 March 2008, http://www.ofcom.org.uk/consult/condocs/slg/statement/

- a requirement to publish a reference offer; and
- a requirement to notify technical information.

1.49 In addition, we have accepted KCOM's voluntary undertaking not to increase the prices of its TISBO terminating segments by more than RPI+0% for four years following the completion of this market review. If KCOM were to fail to adhere to its voluntary undertaking, it would then have to comply with a cost orientation obligation.

Next steps

Further consultation for high bandwidth AISBO market in Hull

1.50 As noted above, we are consulting in this document on the revised proposal for the wholesale high bandwidth AISBO market in Hull, and, in particular, on the revised finding that no undertaking has SMP in that market. Stakeholders have until the 13 January 2009 to send us their comments and views. We will then consider the responses received before we finalise our proposals and issue a final Statement concluding the review of the market for wholesale high bandwidth AISBOs in the Hull area.

Consultation on charge controls

1.51 As noted above, having considered all the responses received and available evidence, we have concluded that, in principle, BT should be subject to charge controls in the markets for low bandwidth, high bandwidth and very high bandwidth 155 Mbit/s TISBOs, TI trunk segments and low bandwidth AISBOs. Our charge control proposals are the subject of a separate consultation document, which is being published alongside this Statement.

Section 2

Introduction

Scope of the review

Services covered in this consultation

2.1 Leased lines, also known as private circuits, provide dedicated transmission capacity between customer sites, which can be used to carry voice and data traffic. Retail sales of these services in the UK are estimated to be worth approximately £1bn a year.

2.2 Wholesale leased lines are also used by Communications Providers (CPs) as inputs to their retail services. These may take the form of complete circuits connecting two or more end-user sites, or partial private circuits (PPCs) connecting customer sites to points in the purchasing CP's network. PPCs can in turn be made up of 'terminating segments', which are currently defined as running from a customer site to a Tier 1 node in BT's network, and 'trunk segments', which typically run over longer distances between Tier 1 nodes. Terminating segments are also known as Symmetric Broadband Origination services. These wholesale inputs may be used to provide retail leased lines or other retail services such as Virtual Private Networks.

2.3 Leased lines play an important role in business communications in the UK. They are a key building block in the communications networks on which UK businesses depend, and which are central to the effective functioning of the economy. It is therefore of considerable importance that the markets for these services operate effectively, and deliver the services which businesses require in a timely, efficient and cost-effective manner, based where possible on active competition between service providers.

2.4 At the retail level, retail leased lines provide businesses with dedicated symmetric transmission capacity to carry voice and/or data traffic. These lines are used to build enterprise networks linking the various company sites, and enable all types of communications within an organisation.

2.5 There are different types of retail leased lines. In this review we consider traditional interface (TI) and alternative interface (AI) (primarily Ethernet) leased lines, which together are by far the most common types of leased lines used by enterprises in the UK.

Figure 2.1: Retail TI Leased Line

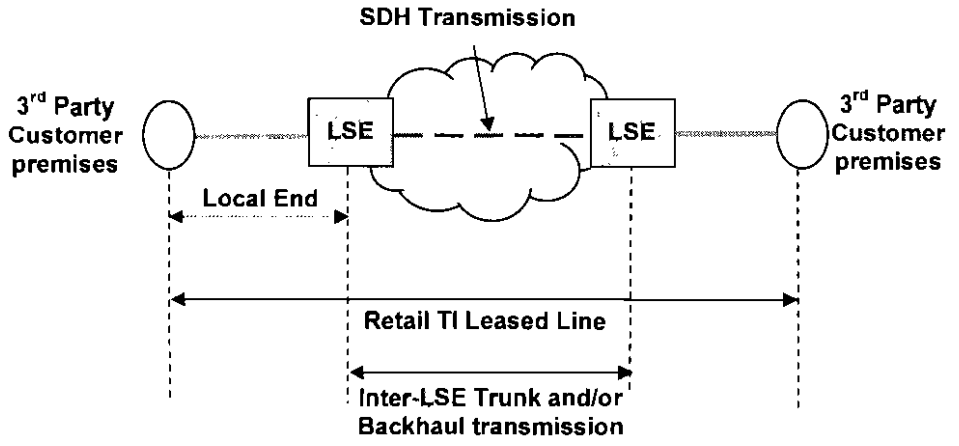

2.6 A retail TI leased line provides dedicated symmetric transmission at a range of bandwidths between two 3rd party customer premises. The 3rd party customer premises are linked to the Local Serving Exchanges (LSE) via copper or fibre-optic pair local ends with SDH or PDH transmission being used to provide the link between the customer premises.

Figure 2.2: Retail AI Leased Line

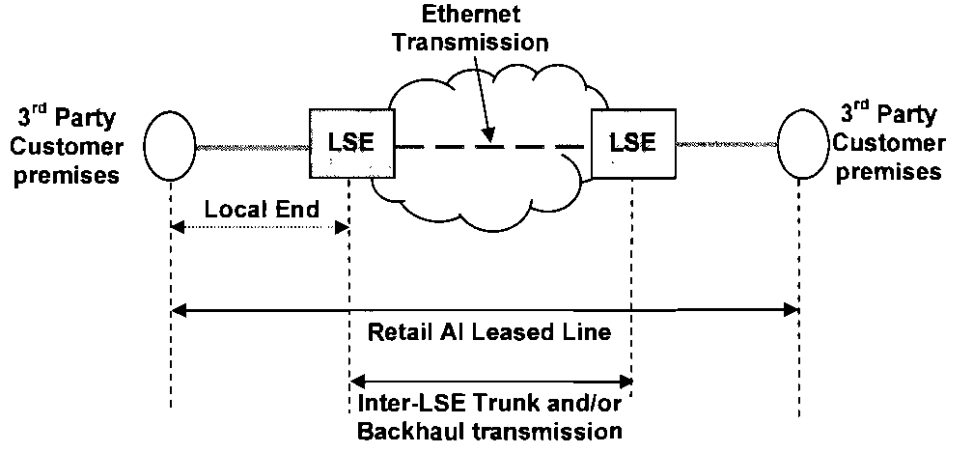

2.7 A retail AI leased line also provides dedicated symmetric transmission at a range of bandwidths between two 3rd party customer premises. In this case, The 3rd party customer premises are linked to the Local Serving Exchanges (LSE) via fibre-optic pair local ends with Ethernet transmission being used to provide the link between the customer premises. These services are often provided using dedicated fibre pairs from 3rd party customer premise to 3rd party customer premise.

2.8 Businesses in the UK also use other types of retail business connectivity services to cater for their communications requirements. The most widely used such services are Virtual Private Networks (VPNs).

Figure 2.3: Virtual Private Network (VPN)

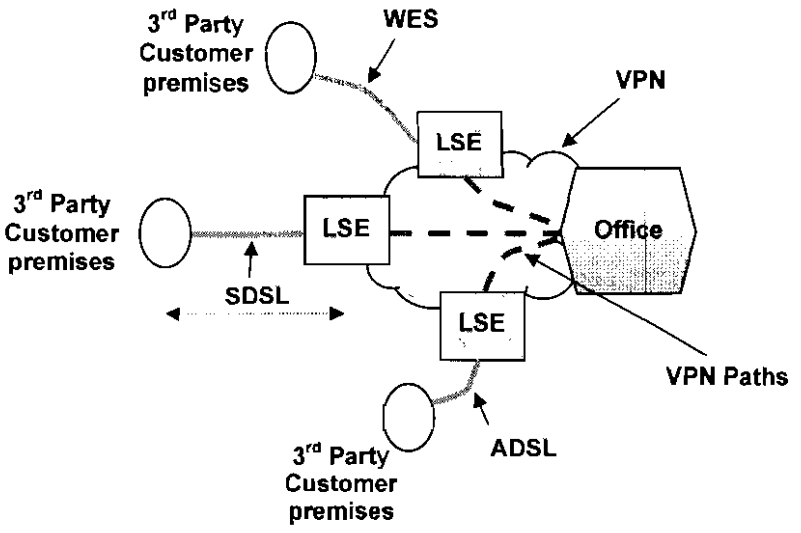

2.9 A VPN typically links end-user premises to a central office in order that other offices or remote workers can access applications such as company Intranet or central database applications. A range of connection types are possible that range from ADSL access via the Internet for a remote worker to dedicated leased lines for satellite offices. The VPN is configured to enable each satellite site to have secure connections of varying bandwidths to the central office.

2.10 These services can use some type of wholesale leased lines in the access network, but can use also other wholesale access services, such as wholesale ADSL. The core transmission typically uses virtual paths across a core infrastructure shared with other services. VPNs can be of different types, depending on the characteristics of the infrastructures used in the access and core.

2.11 At the wholesale level, there are a variety of services that can be used an input into downstream retail TI and AI leased lines markets.

Figure 2.4: Partial Private Circuit (PPC)

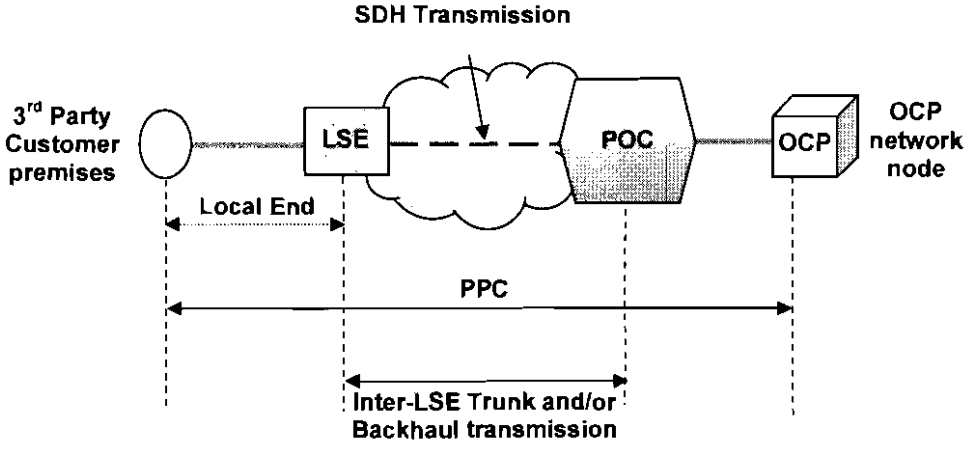

2.12 Partial Private Circuits (PPCs) are the most widely used wholesale leased line in the UK. PPCs provide dedicated symmetric transmission at a range of bandwidths between a 3rd party customer premise and an OCP's network via a Point of Connection (POC). The 3rd party customer premises are linked to the Local Serving Exchanges (LSE) via copper or fibre-optic pair local ends with SDH or PDH transmission being used to provide the link between the customer premises and the POC. A PPC can further be divided into a terminating segment and a trunk segments, with the latter providing connectivity between major aggregation, or trunk, nodes.

2.13 Increasingly important for businesses in the UK and abroad are wholesale Ethernet services. These services are available in a variety of different options, depending on whether the purchaser wishes to self provide some of the retail services using its own network, and what element it wishes to self provide.

Figure 2.5: Wholesale Extension Service (WES)

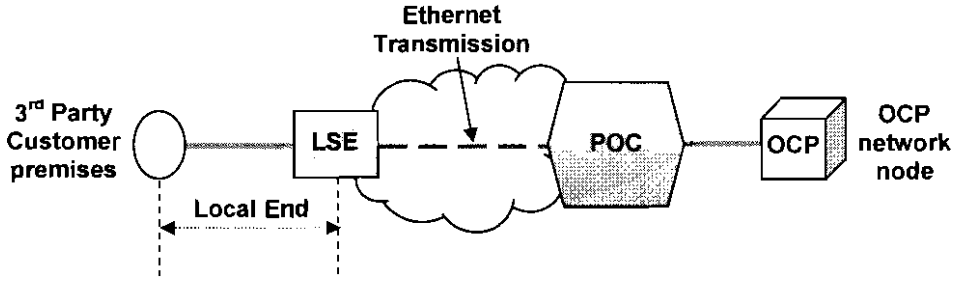

2.14 A Wholesale Extension Service (WES) provides dedicated symmetric transmission at a range of bandwidths between a 3rd party customer premise and an OCP's network node. The service is provided via a fibre-optic local end using Ethernet transmission and often includes transmission between the LSE and the OCP's POC provided using a dedicated fibre-optic pair.

Figure 2.6: WES Access (WES A) and WES Backhaul (WES B)

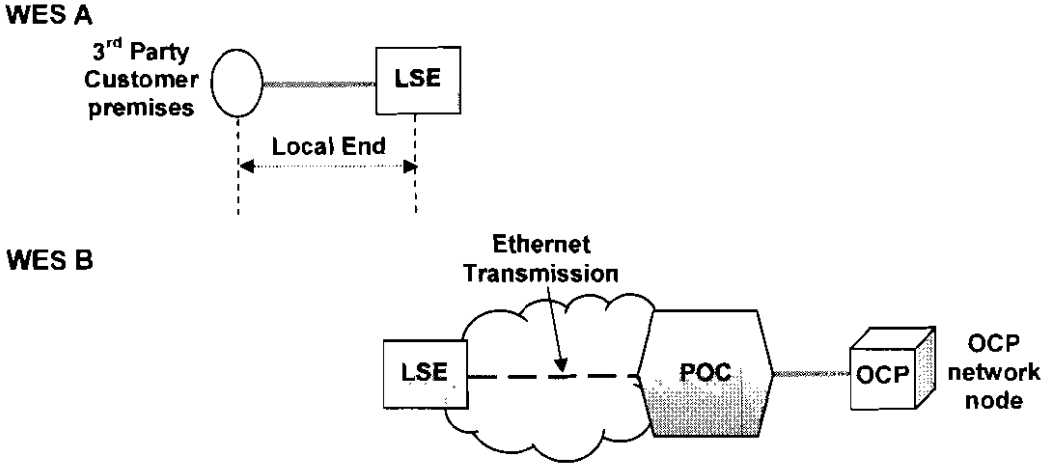

2.15 A WES Access (WES A) service provides dedicated symmetric transmission at a range of bandwidths between a 3rd party customer premise and a Local Serving Exchange (LSE). The service is provided via fibre-optic local ends using Ethernet transmission.

2.16 A WES Backhaul (WES B) service provides dedicated symmetric transmission at a range of bandwidths between a Local Serving Exchange (LSE) and an OCP's network node. The service is provided via fibre-optic local ends using Ethernet transmission.

Figure 2.7: Wholesale End to End Services (WEES)

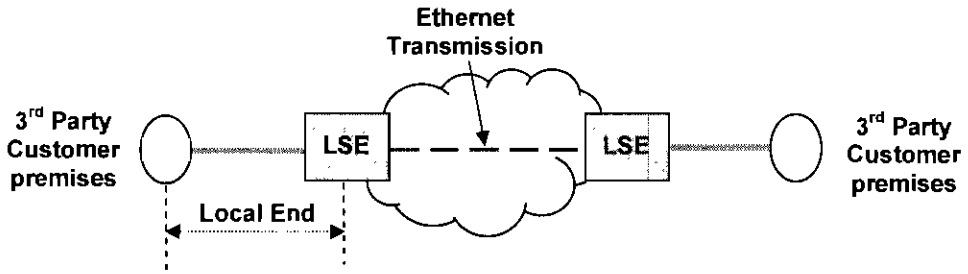

2.17 A Wholesale End to End Service (WEES) provides dedicated symmetric transmission at a range of bandwidths between two 3rd party customer premises. The service is provided via fibre-optic local ends and fibre-optic main link between LSEs using Ethernet transmission.

Figure 2.8: Wholesale SDSL

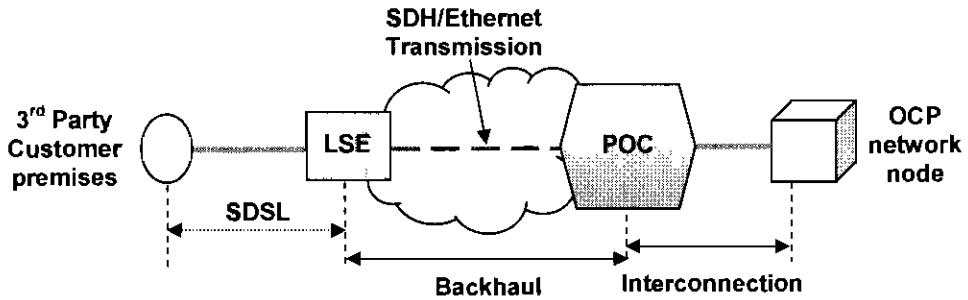

2.18 Wholesale SDSL provides symmetric transmission at a range of bandwidths between a 3rd party customer premise and an OCP's network via a Point of Connection (POC). The 3rd party customer premise is linked to the Local Serving Exchanges (LSE) via a copper pair local end with SDSL transmission being used to provide the link between the customer premise and the LSE of the customer premise and either SDH or Ethernet transmission being used to provide the link between the LSE and the CP's POC.

2.19 Wholesale leased lines are also used to support retail services in markets other than leased lines, due to their ability to provide a secure dedicated transmission method for data and/or voice traffic.

Figure 2.9: Backhaul Extension Service (BES)

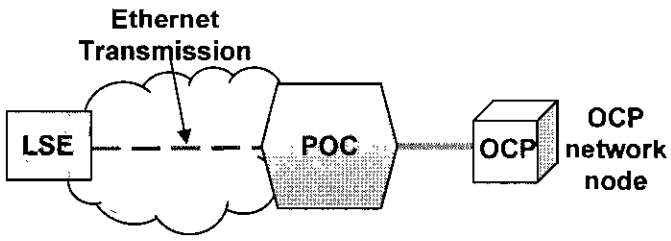

2.20 A Backhaul Extension Services (BES) is a high speed, permanently connected, point-to-point data circuit between a CP and the BT exchange. This service is used by LLU operators to backhaul broadband traffic back onto their communication networks.

2.21 In addition, mobile operators in the UK use a particular wholesale leased lines product, namely Radio Base Station (RBS) Backhaul.

Figure 2.10: RBS Backhaul

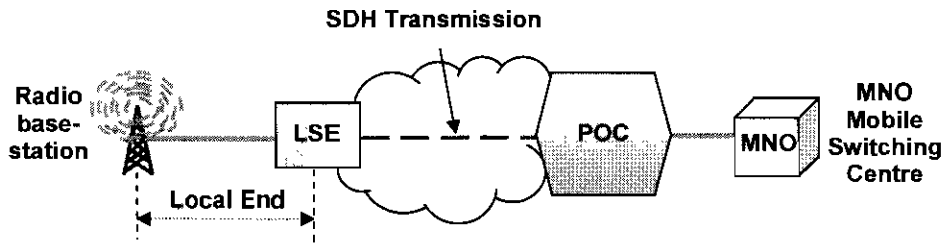

2.22 An RBS backhaul circuit provides dedicated symmetric transmission at a range of bandwidths between a Mobile Network Operator's (MNO's) radio base station and the MNO's network via a Point of Connection (POC) at the MNO's Mobile Switching Centre (MSC). The base-station is linked to the Local Serving Exchanges (LSE) via copper or fibre-optic pair local ends with SDH or PDH transmission being used to provide the link between the radio base station and the POC.

Period covered by this review

2.23 In conducting this review, we have considered the level of competition and the level of regulation required to promote competition both now and on a forward looking basis. In doing so, we have taken the period for assessment as being the next four years.

The regulatory framework

2.24 The present regulatory framework for electronic communications networks and services entered into force on 25 July 2003. The framework is designed to create harmonised regulation across Europe and is aimed at reducing entry barriers and fostering prospects for effective competition to the benefit of consumers. The basis for the regulatory framework is five EU Communications Directives (together "the Directives):

- Directive 2002/21/EC on a common regulatory framework for electronic communications networks and services (Framework Directive);
- Directive 2002/19/EC on access to, and interconnection of, electronic communications networks and associated facilities (Access Directive);
- Directive 2002/20/EC on the authorisation of electronic communications networks and services (Authorisation Directive);
- Directive 2002/22/EC on universal service and users' rights relating to electronic communications networks and services , (Universal Service Directive); and
- Directive 2002/58/EC concerning the processing of personal data and the protection of privacy in the electronic communications sector (Privacy Directive).

2.25 The Framework Directive, the Access Directive, the Authorisation Directive and the Universal Service Directive were implemented in the United Kingdom on 25 July 2003 via the Communications Act 2003 (the Act). The Privacy Directive was implemented by Regulation which came into force on 11 December 2003.

2.26 Article 16 of the Framework Directive requires each national regulatory authority (NRA) to carry out an analysis of the relevant markets as soon as possible after the adoption of the Recommendation on relevant product and service markets or any updating thereof.

2.27 The Commission adopted the first edition of the Recommendation on 11 February 2003[10]. Ofcom carried out a review of retail leased lines, symmetric broadband origination and wholesale trunk segments in 2003/04 with the final statement published on June 2004 (the 2003/04 Review).

2.28 On 17 December 2007 the Commission has adopted the second edition of the Recommendation[11], under which some markets concerned in this review are no longer on the list of markets recommended as being susceptible to *ex ante* regulation[12]. The following two relevant markets have now been removed:

- Retail market for low bandwidth leased lines; and
- Wholesale market for trunk segments of leased lines.

2.29 The removal of markets from the list indicates that the Commission no longer presumes that, in principle, *ex* ante regulation is warranted for these markets. This does not mean, however, that National Regulatory Authorities (NRAs) are not in a position after an analysis of the relevant markets and a finding of SMP to impose appropriate regulatory obligations in these markets, should the national circumstances justify it. When doing so the Commission recommends that NRAs

[10] Commission Recommendation2003/311/EC of 11 February 2003 on relevant product and service markets within the electronic communications sector susceptible to ex ante regulation in accordance with Directive 2002/21/EC of the European Parliament and of the Council on a common regulatory framework for electronic communication networks and services.

[11] Commission Recommendation on relevant product and service markets within the electronic communications sector susceptible to ex ante regulation in accordance with Directive 2002/21/EC of the European Parliament and of the Council on a common regulatory framework for electronic communications networks and services (Second Edition) (C(2007)5406 rev1).

[12] See the Annex to the Recommendation.