inmarsat
1101 Connecticut Ave, NW
Suite 1200
Washington, DC 20036

March 19, 2010

Marlene H. Dortch
Secretary
Federal Communications Commission
445 12th Street, SW
Washington, DC 20554

Re: GN Docket Nos. 09-51, 09-137, 09-47 and 09-157

Dear Ms. Dortch:

On March 18, 2010 Andy Sukawaty, Chairman and CEO, and Diane Cornell, Vice President, Government Affairs of Inmarsat, and Jack Deasy, Director, Civil Programs Government Services, met with James Barnett, Chief, Public Safety and Homeland Security Bureau, and Brian Hurley, also of PSHSB, to provide them with background on Inmarsat and its mobile satellite broadband capabilities, as detailed in the attached presentation.

Please contact the undersigned should you have any questions.

Sincerely,

/s/

Diane J. Cornell
Vice President, Government Affairs

Attachment

CC: Chief James Barnett
Jennifer Manner
Brian Hurley

Meeting with Andy Sukawaty Chairman and CEO, Inmarsat

March 2010

www.inmarsat.com

Inmarsat's Global Broadband Network

- 11 geostationary satellites in orbit today using L-Band
- Three 4th Generation satellites operational
  - Commercial life 2020+
  - 193 spot beams per satellite
- Flexible power allocation (hot spots)
  - Satellite capacity can be redeployed real-time to service areas of high demand
- 100 satellite years without operational failure - 99.99% network availability

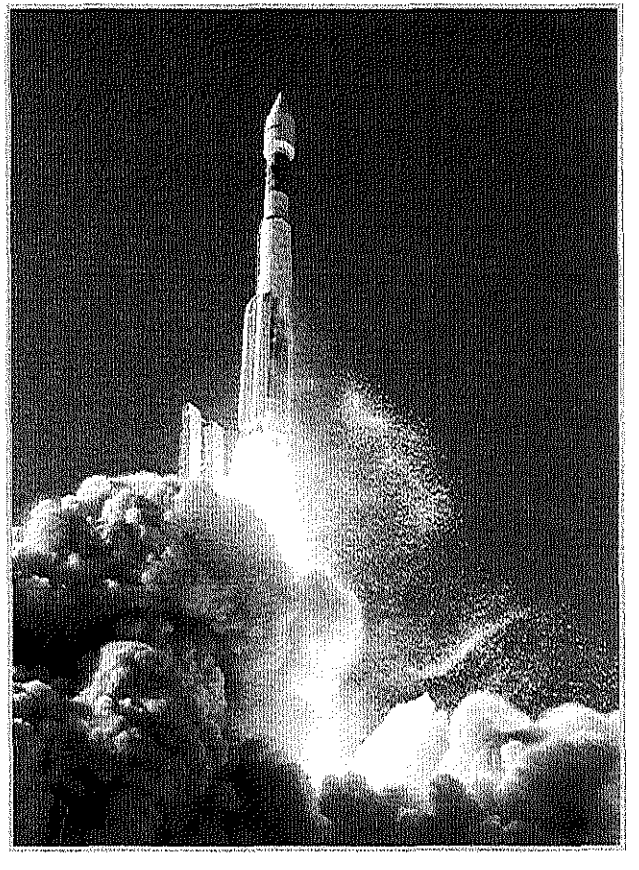

inmarsat

BGAN coverage

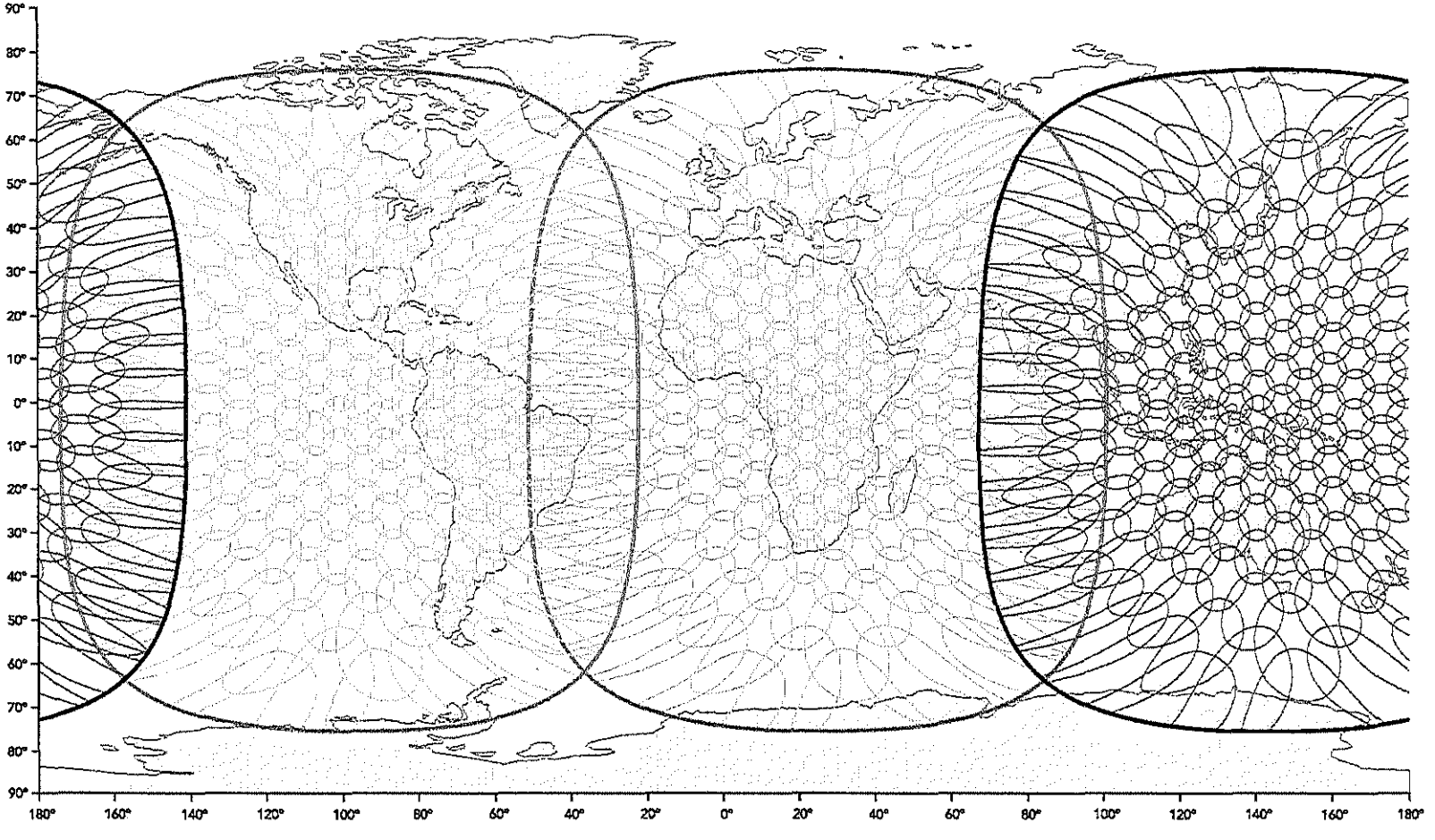

I-4 Americas I-4 EMEA I-4 Asia-Pacific

This map depicts Inmarsat's expectations of coverage, but does not represent a guarantee of service. The availability of service at the edge of coverage areas fluctuates depending on various conditions. BGAN spot beam coverage February 2009.

Broadband Global Area Network (BGAN) Services

- High-speed Broadband data (up to 492kbps)
- … plus low-cost voice
- accessible simultaneously
- through a single, compact device
- with on-demand guaranteed data rates
- Available worldwide

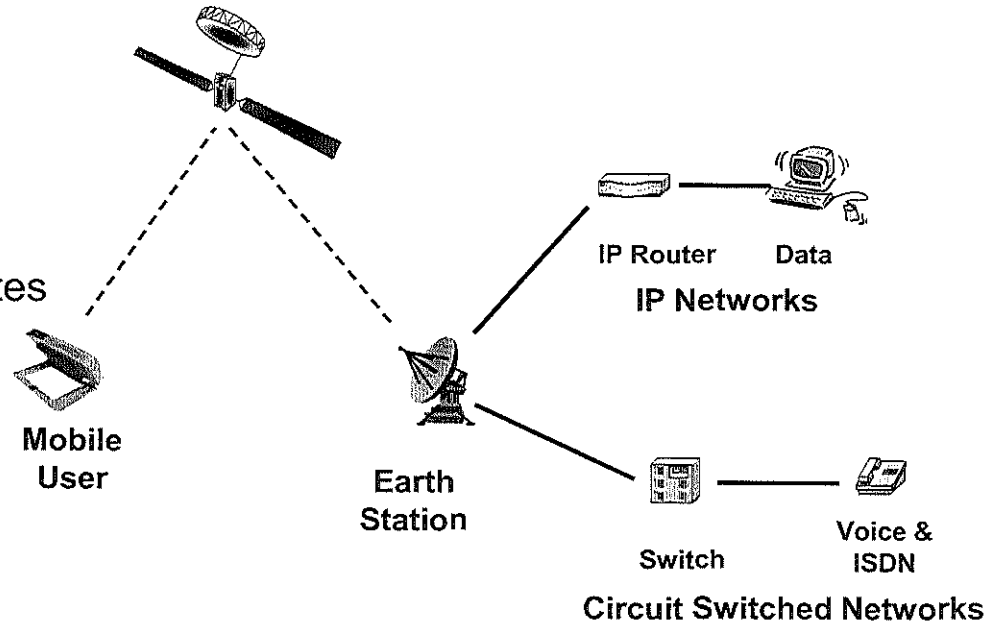

inmarsat

Inmarsat Mobile Satellite Broadband Can Deliver:

- Worldwide coverage with ubiquitous network and products
  - Same interface globally
  - Land, sea, and air mobile services, including safety services for maritime and aeronautical users
  - Mobile broadband network available anytime, anywhere

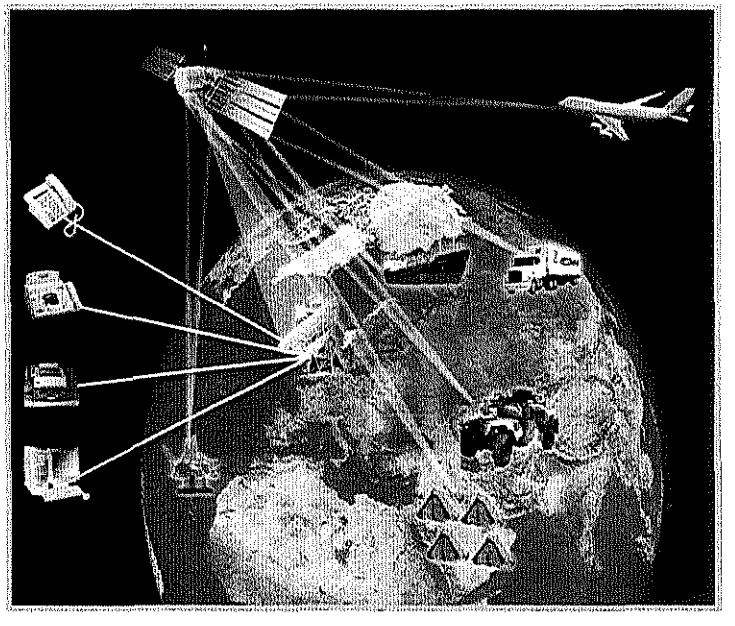

- Small portable devices that are easily set up and online

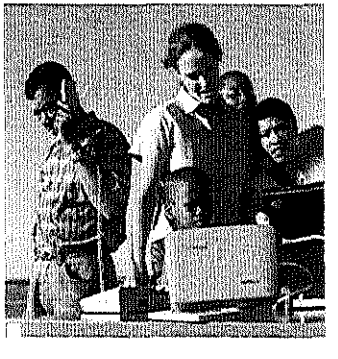

inmarsat

Mobile Satellite Broadband Can Support:

- **Public Safety and Disaster Response**
  - Emergency preparedness
  - Disaster relief communications when terrestrial networks fail
  - Restore and backhaul terrestrial communications (pico cell provides IP connectivity for LMR and mobile phones)

- **Telemedicine**
  - Ambulances: perform lifesaving procedures and diagnostic tests in the field or 'on the move'
  - Mobile clinics: deliver primary and specialty care in rural communities
  - Hospice and homecare: access to electronic medical records and support

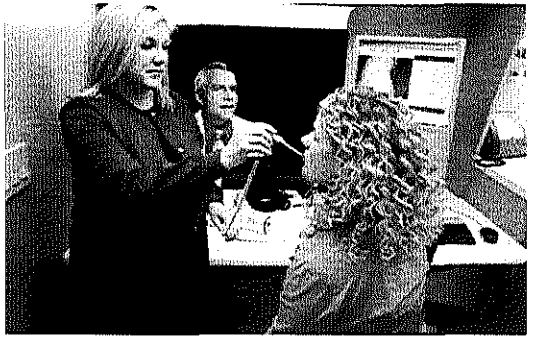

- **National Security and Defense**
  - DoD relies on commercial satellites in the U.S. and throughout the world
- **Critical Infrastructure support**

inmarsat

BGAN Uses: Humanitarian Relief, Remote Activities, Commercial

inmarsat

Supporting customers, worldwide:

- International relief agencies (International Red Cross, Télécoms Sans Frontières, United Nations, FEMA, etc)
- U.S. Government (wherever deployed), including DoD, (Army, Navy, Air Force) DHS (Coast Guard, Border Patrol)
- Media (CNN, NBC, Reuters, etc)
- Critical Infrastructure (oil, gas, electricity, etc)

Policy Issues for Mobile Satellite Broadband

- Recognition that satellite-delivered broadband is a more cost effective solution than other alternatives in hard-to-reach areas
- Globally harmonized, consistent spectrum allocations
- Less burdensome regulatory/licensing framework
- Reasonable fees based on regulatory costs
- Authorization for in-flight passenger connectivity