DOCKET FILE COPY ORIGINAL

Before the
Federal Communications Commission
Washington, D.C. 20554

MAILED
APR 26 2010
FCC Mail Room

In the Matter of	)	
	)	
Video Device Competition	)	MB Docket No. 10-91
	)	
Implementation of Section 304 of the Telecommunications Act of 1996	)	
	)	
Commercial Availability of Navigation Devices	)	CS Docket No. 97-80
	)	
Compatibility Between Cable Systems and Consumer Electronics Equipment	)	PP Docket No. 00-67

NOTICE OF INQUIRY

Adopted: April 21, 2010 **Released: April 21, 2010**

Comment Date: [60 days after date of publication in the Federal Register]
Reply Comment Date: [90 days after date of publication in the Federal Register]

By the Commission: Chairman Genachowski and Commissioners Copps, McDowell, Clyburn and Baker issuing separate statements.

I. INTRODUCTION

1. In this Notice of Inquiry, the Commission seeks comment on specific steps we can take to unleash competition in the retail market for smart, set-top video devices ("smart video devices") that are compatible with all multichannel video programming distributor ("MVPD") services. Our goal in this proceeding is to better effectuate the intent of Congress as set forth in Section 629 of the Communications Act of 1934, as amended.[1] In particular, we wish to explore the potential for allowing any electronics manufacturer to offer smart video devices at retail that can be used with the services of any MVPD and without the need to coordinate or negotiate with MVPDs.[2] We believe that this could foster a competitive retail market in smart video devices to spur investment and innovation, increase consumer choice, allow unfettered innovation in MVPD delivery platforms, and encourage wider broadband use and adoption.

2. More specifically, we introduce the concept of an adapter that could act either as a small "set-back" device for connection to a single smart video device or as a gateway allowing all consumer electronics devices in the home to access multichannel video programming services. Unlike the existing cable-centric CableCARD technology, this adapter could make possible the development and marketing of smart video devices that attach to any MVPD service anywhere in the United States, which could greatly enhance the incentives for manufacturers to enter the retail market. As conceived, the adapter

[1] 47 U.S.C. § 549(c).

[2] The term "smart video device" refers to a product that is capable of navigating the universe of video content available to a viewer. Traditionally, these devices have been cable or satellite set-top boxes, but have expanded to include video game systems, digital video recorders, and home theater personal computers, and which, with the AllVid adapter could additionally provide access to over-the-top services like internet video.

would communicate with the MVPD service, performing the tuning and security decryption functions that may be specific to a particular MVPD; the smart video device would perform navigation functions, including presentation of programming guides and search functionality. The Commission seeks comment on this concept. We also invite any alternative proposals that would achieve the same objective of eliminating barriers to entry in the retail market for smart video devices that are compatible with all MVPD services.

3. The Commission envisions that the proposal adopted in this proceeding would be a successor technology to CableCARD. We predict that smart video devices built to new standards that would be adopted through this proceeding would eventually replace CableCARD devices on retail shelves. Accordingly, in this Notice of Inquiry the Commission also seeks comment on the future of the CableCARD regime. We are separately releasing a Notice of Proposed Rulemaking to address a number of CableCARD implementation issues pending the completion of a successor regime.

II. BACKGROUND

4. In the Telecommunications Act of 1996, Congress added Section 629 to the Communications Act.[3] Section 629 directed the Commission to adopt regulations to ensure the commercial availability of navigation devices used by consumers to access services from MVPDs. Section 629 covers "equipment used by consumers to access multichannel video programming and other services offered over multichannel video programming systems."[4] In enacting the section, Congress pointed to the vigorous retail market for customer premises equipment ("CPE") used with the telephone network and sought to create a similarly vigorous market for devices used with MVPD services.[5]

5. Congress was prescient in enacting Section 629 in 1996. In analog cable systems, which were common throughout the 1990s, most consumers could connect their "cable ready" video cassette recorders and television sets directly to a cable operator's system without the need for any other equipment.[6] During that time, many people became accustomed to and appreciated the convenience of the "plug and play" aspect of connecting a coaxial cable from the wall directly into a television set to receive their video programming service. But this analog "plug and play" technology was unable to support advancements in video delivery technology such as digital cable, bidirectional video services such as pay-per-view, and the emergence of competitive services from Direct Broadcast Satellite ("DBS") providers, which were widely available by 2000. These new developments required the use of more advanced encryption and encoding techniques and bidirectional communication, among other functions, and the MVPDs built this capability into proprietary set-top boxes.

6. The Commission has adopted regulations in response to the statutory mandate in Section 629 to ensure retail competition in the "navigation device" market. Those regulations have enabled competitors such as TiVo and Moxi to enter the market. However, the Commission's rules as they currently exist have yet to realize Congress' charge to develop a fully competitive retail market.

7. The Commission adopted its first Report and Order to implement Section 629 in 1998.[7] The order required MVPDs to make available a conditional access element[8] separate from the basic navigation

[3] *See* Telecommunications Act of 1996, Pub. L. No. 104-104, § 304, 110 Stat. 56, 125-126 (1996); 47 U.S.C. § 549(a).

[4] 47 U.S.C. § 549(a).

[5] H.R. REP. No. 104-204, at 112-3 (1995).

[6] *See* John H. Gibbon, *Overview of Cable Television Franchise Renewal and Rate Regulation*, 27 URB. LAW. 749, 758-9 (Fall 1995).

[7] *Implementation of Section 304 of the Telecommunications Act of 1996: Commercial Availability of Navigation Devices*, 13 FCC Rcd 14775 (1998) ("*First Report and Order*").

device, in order to permit unaffiliated manufacturers and retailers to manufacture and market navigation devices while allowing MVPDs to retain control over their system security.[9] The technical details of this conditional access element were to be worked out in industry negotiations. In 2003, the Commission adopted standards on which the National Cable and Telecommunications Association and the Consumer Electronics Association had agreed in a Memorandum of Understanding ("MOU"), with certain modifications.[10] The MOU prescribed the technical standards for "CableCARD" compatibility. The CableCARD is a security device provided by an MVPD, which can be inserted into a set-top box or television set bought by a consumer in the retail market and enable the consumer's television to display MVPD encrypted video programming. To ensure adequate support by MVPDs for CableCARDs, the Commission prohibited MVPDs from integrating the security function into set-top boxes they lease to consumers, thus forcing MVPDs to rely on CableCARDs as well.[11] This "integration ban" was initially set to go into effect on January 1, 2005,[12] but that date was later extended to July 1, 2007.[13]

8. The Commission's rules require cable operators to support only one-way plug-and-play capability[14] for retail CableCARD devices.[15] This largely reflects the absence of a proven market for two-way services when negotiations began, and a desire within the industry to achieve consensus on how to assure access to the most basic services first and not await the conclusion of negotiations regarding access to new services that might be introduced later. Accordingly, the Commission's rules do not require cable operators to provide access for retail devices to two-way services such as interactive program guides, pay-per-view, or video-on-demand services, which were nascent services in 2003 and would have required complex and lengthy technical consideration.[16] For that reason among others, retail CableCARD devices have not been able to offer all of the cable services available to subscribers who lease their set-top boxes from the cable operator. This is partially responsible for the failure of the CableCARD solution to create a strong retail market for navigation devices.

9. Furthermore, although the CableCARD rules nominally apply to all MVPDs, the Commission exempted MVPDs that operate throughout the United States and offer devices for retail sale through

---

[8] The term "conditional access element" refers to a piece of equipment that handles the security functions that allow a navigation device to access subscription video services (*e.g.*, decryption of scrambled content).

[9] *Id.* at 14808, ¶ 80; 47 C.F.R. § 76.1204(a)(1).

[10] *See Implementation of Section 304 of the Telecommunications Act of 1996: Commercial Availability of Navigation Devices; Compatibility Between Cable Systems and Consumer Electronics Equipment*, 18 FCC Rcd 20885, at 20926-20944, Appendix B (2003). *See also Implementation of Section 304 of the Telecommunications Act of 1996: Commercial Availability of Navigation Devices; Compatibility Between Cable Systems and Consumer Electronics Equipment*, 18 FCC Rcd 518, 531-609, Appendix B (2003).

[11] *First Report and Order*, 13 FCC Rcd at 14803, ¶ 69.

[12] *Id.*

[13] In April 2003, the Commission extended the effective date of the integration ban until July 1, 2006. *See Implementation of Section 304 of the Telecommunications Act of 1996: Commercial Availability of Navigation Devices*, 18 FCC Rcd 7924, 7926, ¶ 4 (2003). Then, in 2005, the Commission further extended that date until July 1, 2007. *See Implementation of Section 304 of the Telecommunications Act of 1996: Commercial Availability of Navigation Devices*, 20 FCC Rcd 6794, 6810, ¶ 31.

[14] "One-way plug-and-play" is a term for devices that can access traditional video programming that is prescheduled by the programming provider and does not require any communication back to the cable headend.

[15] *Oceanic Time Warner Cable, A subsidiary of Time Warner Cable, Inc. et al*, Order on Review, 24 FCC Rcd 8716, 8721, ¶¶ 11-12 (2009) ("Our [CableCARD] rules were not intended to provide access to bi-directional services or to freeze all one-way cable programming services in perpetuity.")

[16] *See Implementation of Section 304 of the Telecommunications Act of 1996: Commercial Availability of Navigation Devices, Compatibility Between Cable Systems and Consumer Electronics Equipment*, 18 FCC Rcd 20885, 20890 (2003) ("*Second Report and Order*").

unaffiliated vendors. In practice, this means that DBS operators are not subject to these rules. More recent entrant AT&T does not provide CableCARD devices, and Verizon supports CableCARDs to a limited extent, but not for its advanced IP services. The Commission also has given numerous integration ban waivers to cable operators who have demonstrated good cause for waiver, such as cable operators in financial distress and cable operators who have upgraded their systems to all-digital.[17] While numerous, these integration ban waivers involve a *de minimis* number of cable subscribers nationwide. The Commission also started granting waivers for low-cost, limited capability set-top boxes and, although these waivers will result in more than a *de minimis* number of subscribers receiving these boxes, these boxes are able to access only one-way services and provide a substantial public interest benefit by significantly reducing costs to consumers for these low-end services.

10. Unfortunately, the Commission's efforts to date have not led to a robustly competitive retail market for navigation devices that connect to subscription video services.[18] Most cable subscribers continue to use the traditional set-top boxes leased from their cable operator.[19] Although following adoption of the CableCARD rules some television manufacturers sold unidirectional digital cable-ready products ("UDCPs"), most manufactures have abandoned the technology.[20] Indeed, since July 1, 2007, cable operators have deployed only 456,000 CableCARDs for installation in retail devices, compared with their deployment of more than 17.7 million leased devices pre-equipped with CableCARDs since the integration ban went into effect.[21] Furthermore, while 605 UDCP models have been certified or verified for use with CableCARDs, only 37 of those certifications have occurred since the integration ban took effect in July 2007.[22] This indicates that, with the exceptions of TiVo, Moxi, and CableCARD-equipped home theater computers, retail device manufacturers have abandoned CableCARD technology before any substantial benefits of the integration ban could be realized.

11. The Commission anticipated that the parties to the MOU would negotiate a further agreement to achieve two-way compatibility, using either a software-based or hardware-based solution.[23] When the Commission realized in June 2007 that negotiations were not leading to an agreement for two-way compatibility between consumer electronics devices and cable systems, it released a Third Further Notice of Proposed Rulemaking, seeking comment on competing proposals for two-way compatibility and other

[17] *See, e.g.*, *Great Plains Cable Television, Inc. et al Requests for Waiver of Section 76.1204(a)(1) of the Commission's Rules*, 22 FCC Rcd 13414; *GCI Cable, Inc. Request for Waiver of Section 76.1204(a)(1) of the Commission's Rules*, 22 FCC Rcd 8576 (2007).

[18] Rob Pegoraro, *As Cable TV Goes Digital, It's Still Stuck Inside the Box*, THE WASHINGTON POST, Oct. 4, 2009, at G1.

[19] *See* FEDERAL COMMUNICATIONS COMMISSION, BROADBAND GAPS 18 (November 18, 2009), *available at* http://hraunfoss.fcc.gov/edocs_public/attachmatch/DOC-294708A1.pdf.

[20] Rob Pegoraro, *As Cable TV Goes Digital, It's Still Stuck Inside the Box*, THE WASHINGTON POST, Oct. 4, 2009, at G1. Some manufacturers are offering tru2way television sets with CableCARD slots in test markets. David Chartier, *Panasonic ships first tru2way HDTVs to Chicago, Denver*, ARS TECHNICA, October 16, 2008, *available at* http://arstechnica.com/old/content/2008/10/panasonic-ships-first-tru2way-hdtvs-to-chicago-denver.ars.

[21] Letter from Neal M. Goldberg, Vice President and General Counsel, National Cable & Telecommunications Association, to Marlene H. Dortch, Secretary, Federal Communications Commission, CS Docket No. 97-80, at 1 (December 22, 2009).

[22] *Compare* Letter from Neal M. Goldberg, Vice President and General Counsel, National Cable & Telecommunications Association, to Marlene H. Dortch, Secretary, Federal Communications Commission, CS Docket No. 97-80, at 1 (December 22, 2009) *with* Letter from Neal M. Goldberg, Vice President and General Counsel, National Cable & Telecommunications Association, to Marlene H. Dortch, Secretary, Federal Communications Commission, CS Docket No. 97-80, at 1 (June 25, 2007).

[23] *Implementation of Section 304 of the Telecommunications Act of 1996: Commercial Availability of Navigation Devices*, 18 FCC Rcd 7924, 7925-6, ¶ 4-5 (2003); *Implementation of Section 304 of the Telecommunications Act of 1996: Commercial Availability of Navigation Devices*, 20 FCC Rcd 6794, 6811-2, ¶ 34 (2005).

related issues.[24] In the wake of this *Two-way FNPRM*, the six largest cable operators and a number of consumer electronics manufacturers negotiated an agreement for bidirectional compatibility that continues to rely and build on CableCARDs by using a middleware-based solution called "tru2way."[25]

12. We are not convinced that the tru2way solution will assure the development of a commercial retail market as directed by Congress. As an alternative, we seek to explore the potential for fulfilling this statutory directive by providing consumer electronics manufacturers with the ability to build smart video navigation devices that can access MVPD content regardless of the delivery technology the provider employs and to ensure that necessary licensing agreements do not contain contractual terms that limit the functionality of the devices. Although tru2way is designed to be a two-way solution for traditional cable operators, it requires manufacturers to sign a license agreement that contains limitations that may hinder innovation. For example, the agreement limits a device's ability to integrate video from multiple sources into a consistent viewing experience by limiting the presentation and content of a tru2way device's graphical user interface.[26] This could prevent a tru2way device from searching a consumer's computer, DVR, Netflix account, and cable-operator-provided video on demand offerings for a particular film or for films that include the consumer's favorite actor. Furthermore, tru2way is an unworkable solution for DBS and other non-cable providers. Even service from a cable provider like Verizon, which provides most of its video using the same QAM delivery technology as traditional cable operators, but uses Internet Protocol ("IP") for interactive functions such as video-on-demand, currently is not compatible with tru2way.[27] Finally, the fact that the DBS providers are the second and third largest MVPDs, continue to gain market share, and yet are not subject to the integration ban also may be impeding the development of a vibrant retail market by artificially limiting the market for competitive retail devices.[28] Despite the importance of being able to expand the retail market to reach the DBS providers' networks, most consumer electronics manufacturers acknowledge that an attempt to establish standards for navigation devices that would work with each of the different delivery technologies without some intermediation would be impractical and prohibitively expensive.[29]

13. The approaches considered to date have a number of inherent limitations. Both the one-way CableCARD and tru2way approaches focus on television sets and digital video recorders ("DVRs") as the initial consumer device, with that device housing security (through the CableCARD), tuning, and navigation functions. Yet delivery platforms continue to evolve at a rapid pace. As these delivery

---

[24] *Implementation of Section 304 of the Telecommunications Act of 1996: Commercial Availability of Navigation Devices*, 22 FCC Rcd 12024 (2007) ("*Two-way FNPRM*").

[25] Bidirectional Digital Cable Televisions incorporating tru2way are now available from Panasonic in test markets. As of October 6, 2009, the tru2way MOU has been signed by ADB, Alticast, AMD, Broadcom, Cisco, Digeo, EchoStar, Funai, Intel, LG Electronics, Motorola, Pace, Panasonic, Samsung, Sony, Texas Instruments, Thomson, Tivo, and Toshiba, as well as the cable operators Comcast, Cox, Time Warner, Charter, Cablevision, and Bright House.

[26] *See, e.g.*, <tru2way> Host Device License Agreement at 6, 22, *available at* http://www.opencable.com/downloads/tru2way_agreement.pdf (referencing a document that defines "appropriate behavior" for devices that separate "CE Mode" from "Cable Mode"); see *also OpenCable™ Specifications - OpenCable™ Host Device Core Functional Requirements*, *available at* http://www.opencable.com/specifications/host.html (cataloging the technical specifications and testing requirements necessary to develop a tru2way device).

[27] *See* Letter from Dee May, Vice President, Federal Regulatory, Verizon, to Marlene H. Dortch, Secretary, Federal Communications Commission, CS Docket No. 97-80, at 1-2 (August 27, 2008).

[28] Traditional cable operators and Verizon FiOS service currently serve only 65% of MVPD subscribers and 55-60% of all households. SNL Kagan (2009).

[29] Letter from Peter M. Fannon, Vice President Technology Policy, Government & Regulation, Panasonic, and Paul G. Schomburg, Senior Manager, Government & Public Affairs, to Marlene H. Dortch, Secretary, Federal Communications Commission, CS Docket No. 97-80, at 3 (Oct. 30, 2007).

platforms evolve, consumers may need to upgrade or replace their devices to maintain compatibility with those delivery platforms, even if the device is still physically sound.[30] It is impractical to expect consumers to spend hundreds of dollars to replace their television sets or set-top boxes to accommodate each delivery innovation. A subscriber can avoid that risk by renting an HD set-top box from a cable operator for an average cost of $8.22 per month.[31] This disparity can be expected to perpetuate reliance on cable operators' set-top leasing model and undermine development of a vigorous retail market in navigation devices even if tru2way is successfully deployed.

14. On December 3, 2009, the Commission's Omnibus Broadband Initiative ("OBI") released a Public Notice ("*NBP PN #27*") seeking comment on four issues related to the ability of manufacturers to compete and innovate in the video device market.[32] Specifically, the Public Notice sought comment on (i) the technological and market-based limitations that prevent retail devices from accessing all types of content; (ii) whether a retail market for network-agnostic video devices could spur broadband use and adoption and achieve the goals of Section 629; (iii) whether the home broadband service model could be adapted to provide for audio-visual device connectivity; and (iv) what obstacles may hinder convergence of internet and MVPD-provided video. Commenters generally agreed that the technological limitations that prevent devices from accessing all types of content can be traced to the different conditional access schemes, delivery technologies, and platforms that MVPDs use.[33] Commenters expressed some disagreement about whether network-agnostic video devices would spur broadband use and adoption, but generally agreed that true network agnosticism is a laudable goal for navigation devices.[34] Commenters also generally agreed that the home broadband service model could be adapted to provide for audio-visual device connectivity, but some disagreed about the specific methods that should be used for such connectivity.[35] Finally, commenters generally agreed that the obstacles that hinder convergence of Internet and MVPD-provided video are divergent delivery technologies and content protection methods.[36] Certain commenters also cited business practices that deter entry into the market.[37] NCTA recently filed a letter expressing its members' commitment to a set of principles largely supportive of our objeetives in launching this proceeding.[38]

---

[30] For example, a tru2way television set may still have useful life as a television set or monitor after the cable industry adopts a successor technology to tru2way that does not work with devices built to the tru2way standard.

[31] *See Implementation of Section 3 of the Cable Television Consumer Protection and Competition Act of 1992; Statistical Report on Average Rates for Basic Service, Cable Programming Service, and Equipment*, 24 FCC Rcd 259, 286-8 (2009).

[32] *Comment Sought on Video Device Innovation*, Public Notice, 24 FCC Rcd 14280 (2009).

[33] *See, e.g.*, Verizon Comments on NBP PN #27 at 3; Nagravision Comments on NBP PN #27 at 6-7.

[34] *See, e.g.*, TiVo Comments on NBP PN #27 at 18; DLNA Comments on NBP PN #27 at 2..

[35] *See, e.g.*, CEA Comments on NBP PN #27 at 17-18; CERC Comments on NBP PN #27 at 11-12; TiVo Comments on NBP PN #27 at 13; Time Warner Comments on NBP PN #27 at 10-11.

[36] *See, e.g.*, TiVo Comments on NBP PN #27 at 18; DLNA Comments on NBP PN #27 at 2.

[37] *See, e.g.*, SageTV Reply Comments on NBP PN #27 at 9; Nagravision Comments on NBP PN #27 at 3; CERC Comments on NBP PN #27 at 6-9.

[38] *See* Letter from Kyle McSlarrow, NCTA, to Chairman Julius Genachowski, FCC, dated March 12, 2010 (expressing support for a retail market in which an MVPD customer would not have to rely on equipment from the operator to access video services from any MVPD and the Internet and in which the customer would receive the ability to search across multiple platforms and to move video content between different devices in the home and to do so in a way that promotes continued innovation, maximizes consumer benefits, and ensures competitive neutrality; and proposing that these principles be implemented flexibly and in a way that will facilitate a private sector solution and limit government technology mandates to the greatest extent possible.)

III. DISCUSSION

15. In this *Notice of Inquiry*, we seek comment on ways to achieve the objective that Congress established nearly fifteen years ago. While MVPD services have become far more robust in the intervening years,[39] for the most part the consumer experience with respect to the equipment that is required to access those services has not.[40] Consumers have shown limited interest in purchasing retail devices that can access MVPD services under our existing rules, and we believe that two fundamental defects in the current regime account for this reluctance. First, with few exceptions retail navigation devices are unable to provide functionality beyond that available in devices that subscribers can lease from their providers and often are unable to access many of the MVPD services that leased set-top devices are able to access. Second, as a general matter a retail navigation device purchased for use with one MVPD's services cannot be used with the services of a competing MVPD. We seek comment on these premises, and we invite commenters to offer other explanations for the failure of a retail market for navigation devices to emerge.

16. Assuming that these premises are in the main correct, we propose a solution that could address these two fundamental problems and seek comment on them. We believe that the concept discussed below could give device manufacturers the ability to develop "smart" products that can access any service that an MVPD provides without the need to enter into restrictive license agreements with MVPDs. The concept also could give device manufacturers the ability to develop smart video devices that can access MVPD programming regardless of the delivery technology that the MVPD uses. Accordingly, we introduce and seek comment on a model that would require MVPDs to provide a small, low-cost adapter that would connect to proprietary MVPD networks and would provide a common interface for connection to televisions, DVRs, and other smart video devices, as described below. This adapter, a further development of the concept of the "gateway device" recommended in Chapter 4 of the National Broadband Plan,[41] would perform the conditional access functions as well as tuning, reception, and upstream communication as directed by the smart video device. The adapter and the smart video device would communicate with each other using a standard interface, but each adapter would be system-specific to a particular MVPD in order to communicate with its network. Innovations in a MVPDs' delivery technology might require substitution of a new adapter but would not require the consumer to replace her smart video device or other in-home equipment. While the Commission seeks comment on this concept, we also encourage commenters to present other proposals that would remove barriers to the establishment of a retail market for smart video devices compatible with all MVPD services. If commenters disagree that the root problems involve limits on device functionality and portability across MVPDs, we invite them to identify what they believe are the obstacles to a competitive retail market in navigation devices and to propose solutions.

A. The AllVid Concept

17. Ideally, the Commission's all video ("AllVid") solution would work for all MVPDs and lead to a nationwide interoperability standard, much as Ethernet and the IEEE 802.11 standards have led to nationwide interoperability for customer data networks while allowing broadband service providers to

[39] *See, e.g., Annual Assessment of the Status of Competition in the Market for the Delivery of Video Programming*, 24 FCC Rcd 542, 545-51, ¶¶ 5-21 (2009).

[40] For example, fewer than half a million cable subscribers use equipment that they own to access encrypted cable services. *Cf.* Letter from Neal M. Goldberg, Vice President and General Counsel, National Cable & Telecommunications Association, to Marlene H. Dortch, Secretary, Federal Communications Commission, CS Docket No. 97-80, at 1 (December 22, 2009) (reporting that cable operators have deployed only 456,000 CableCARDs for use in subscriber-owned boxes).

[41] *See* FEDERAL COMMUNICATIONS COMMISSION, CONNECTING AMERICA: THE NATIONAL BROADBAND PLAN 51-52 (2010).

deploy differing proprietary network technologies. The AllVid solution would be designed to accommodate any delivery technology that an MVPD chooses to use and allow MVPDs to continue unfettered innovation in video delivery, because the MVPD-provided AllVid adapter, rather than the consumer-owned smart video device, would be responsible for all communication with the MVPD. At the same time, it would allow consumer electronics manufacturers to design to a stable interface and to integrate multiple functions within a retail device. This approach would provide the necessary flexibility for consumer electronics manufacturers to develop new technologies, including combining MVPD content with over-the-top video services (such as videos offered from, for example, Amazon, Hulu, iTunes, or NetFlix), manipulating the channel guide, providing more advanced parental controls, providing new user interfaces, and integrating with mobile devices.

18. Two previous standardization approaches help to illustrate how this solution could unleash competition and innovation in equipment used with MVPD services, while allowing unfettered innovation in the services themselves: (i) The *Carterfone* and *Computer Inquiry* decisions required that the telephone network be terminated in a standardized RJ-11 interface; and (ii) broadband services developed using divergent and rapidly developing network technologies terminated in an adapter that presents a standardized Ethernet interface.

19. The RJ-11 interface requirement allowed the development of a vibrant retail market for answering machines, cordless phones, fax machines, modems, and other customer-premises equipment used with the telephone network.[42] The requirement that the network terminate in a standardized interface with no carrier-supplied terminating device was implemented in the context of a single telephone network that used a single, stable delivery technology. It was a workable and successful solution in that context because our telephone network was based on a nationwide standard.

20. Broadband services differ from telephone service in two key respects that have led to a significantly different approach. Multiple broadband operators provide services using divergent network technologies; and those technologies are not static but are rapidly developing. Numerous broadband delivery technologies exist – among them cable, digital subscriber line ("DSL"), satellite, wireless broadband, and optical fiber to the home. In each system, the operator provides a customer with an interface device such as a cable modem that performs all of the network-specific functions and connects via an Ethernet port to a multitude of competitively provided customer-premises devices including computers, printers, game consoles, digital media devices, wireless routers, and network storage devices. This approach has promoted an innovative and highly competitive retail market for devices used with broadband services. At the same time, because each operator terminates its service in an interface device that it can swap out as needed to accommodate innovations in delivery technologies, this approach has freed service providers to innovate in their networks without changing the Ethernet connection to which customers attach their devices. For example, a DSL provider can introduce a new, faster technology in its network and, if necessary, swap in a new DSL modem that incorporates the new technology, without changing the customer interface or requiring customers to replace devices they use with the service. This allows consumers to benefit from new and improved services without incurring the cost of replacing devices they have purchased at retail – replacing a single modem is more cost-effective than replacing each device that accesses broadband services.

21. One possible reason for the lack of success in the implementation of Section 629 to date is that it was modeled on the earlier telephone service approach, rather than the second, broadband approach. As NCTA has pointed out, the interface requirement as it applies to telephone service is not completely analogous.[43] We agree, and we believe that the approach to assuring device compatibility with broadband services may provide a better model for MVPD device compatibility. MVPDs, like

[42] Google Comments on NBP PN #27 at 6-8.

[43] NCTA Comments on NBP PN #27 at 24, n.43.

broadband providers, use divergent and rapidly developing delivery technologies, and our experience with the CableCARD regime indicates that a static implementation of Section 629 that incorporates network-specific interface functions into the navigation devices that consumers purchase in the retail market is unlikely to succeed. A more innovative, pragmatic, and long-term approach may be to separate those network interface functions from the consumer devices through the use of an adapter, as is the case with broadband services.[44]

22. The AllVid concept would follow the broadband approach. It would place the network-specific functions such as conditional access, provisioning, reception, and decoding of the signal in one small, inexpensive operator-provided adapter, which could be either (i) a set-back device – which today could be as small as deck of cards – that attaches to the back of a consumer's television set or set-top box, or (ii) a home gateway device that routes MVPD content throughout a subscriber's home network.[45] The adapter would act as a conduit to connect proprietary MVPD networks with navigation devices, TV sets, and a broad range of other equipment in the home. The AllVid adapter would communicate over open standards widely used in home communications protocols, as outlined below, enabling consumers to select and access content through navigation devices of their choosing purchased in a competitive retail market. MVPDs would, of course, be free to participate in the retail market by offering navigation devices for sale or lease to consumers, but those devices would be separate from the adapter and marketed separately.

23. We believe that this model could unleash an expanding retail market for innovative and portable smart video devices and could also maintain MVPDs' freedom to innovate in and protect their networks. As we envision the AllVid concept, it could lead to "[c]ompetition in the manufacturing and distribution of consumer devices" as Congress envisioned, which "has always led to innovation, lower prices and higher quality,"[46] because retail devices would be able to access the full array of services offered by all MVPDs and to integrate those services with other video sources – something that today's plug-and-play devices and tru2way devices cannot do. More specifically, we believe that this new AllVid model could: (i) spur the development of a competitive retail market in navigation devices, thus providing subscribers with viable alternatives to leasing or buying a set-top box from their MVPD, (ii) drive down retail prices for devices used to access MVPD services without increasing the prices of those services, (iii) encourage MVPDs to develop and introduce innovative services without being inhibited by the need to consult with navigation device manufacturers, and (iv) encourage device manufacturers to develop and introduce innovative smart video devices without being deterred by the need to consult with MVPDs. In the following section, we seek comment on a framework designed to achieve those goals; we also encourage commenters to propose alternative plans that could achieve the same goals.

B. AllVid Standards

24. The AllVid adapter would perform only the functions necessary to support devices connected to the home network, and should connect to home network devices using a nationally supported standard interface that is common across MVPDs. We expect that an AllVid adapter could be inexpensive and physically small but, as set forth below, seek comment on those assumptions. We also envision that MVPDs would provide subscribers with the AllVid adapters (included in the price of service, or for a nominal lease fee, or with the option to purchase), and that AllVid adapters would likely not be portable

[44] The Commission realizes that the analogy between broadband service and subscription video service is not perfect. The Commission believes, however, that the panoply of devices that are available at retail for consumers to use to connect to broadband networks demonstrates that there is true promise in the basic concept of separating operator-specific communications functions into a device that can then communicate with individual retail devices or a network of retail devices throughout a subscriber's home.

[45] *See* Appendix A.

[46] H.R. REP. NO. 104-204, at 112 (1995).

across carriers. We seek comment on these expectations, as well as on the specific elements we believe would be necessary to bring the concept to fruition. For example, in a petition for rulemaking filed in the wake of NBP PN #27, Public Knowledge suggests that an AllVid-type device would require "standards for (1) a physical connection, (2) a communication protocol, (3) authentication, (4) service discovery, and (5) content encoding."[47] We seek comment on Public Knowledge's proposal, as well as the list of functions discussed in detail below that we believe would be necessary to implement the AllVid concept.[48] We seek comment on any other functions for which standards would be necessary to develop an AllVid adapter. In this Section, we also seek comment on standards for the adapters, with the understanding that these standards may not encompass the entire universe necessary to develop and deploy AllVid adapters.

25. *AllVid Equipment.* The AllVid equipment would be designed to operate specifically with one MVPD and offered through the MVPD's preferred mechanism, whether leased or sold at retail, manufactured by one company or competitively. We foresee two possible physical configurations for the AllVid equipment. In the first configuration, the AllVid equipment would be a small "set-back" device, capable of communicating with one navigation device or TV set and providing at least two simultaneous video streams to allow for picture-in-picture and to allow subscribers to watch a program on one channel while recording a program on another channel. In the second configuration, the AllVid equipment would act as a whole-home gateway, capable of simultaneously communicating with multiple navigation devices within the home, and providing at least six simultaneous video streams within the home (which would allow picture-in-picture in three different rooms), possibly through a modular system that could accommodate more streams as necessary. We seek input on each of these configurations and whether one of these configurations is more appropriate than the other, or if there are other superior configurations that should be considered.

26. *Physical connection.* The 100-BASE-TX Ethernet could act as the physical layer technology used to connect the AllVid adapters with navigation devices. 100-BASE-TX Ethernet operates at speeds adequate to allow transfer of multiple high definition MPEG-2 signals (nominally 15 Mbps each), and it has developed as a *de facto* connection for data transmission. Current and next-generation audio-visual equipment has and will continue to include Ethernet ports for connectivity for the foreseeable future. Therefore, adoption of Ethernet as the physical connection for AllVid adapters and navigation devices could enable compatibility with existing devices. In addition, the ubiquity of Ethernet could allow the AllVid adapter and navigation device manufacturers to defray costs to a large extent. We seek comment on these predictions. We seek comment on whether using Ethernet for the physical connection would be limiting if Internet video were not passed through the AllVid adapter. We also seek comment on any other physical connectors (for example, Multimedia over Coaxial Cable ("MoCA")) that could serve as the bridge between AllVid adapters and retail navigation devices, or whether the Commission would need to mandate a physical layer technology at all.

27. *Communication Protocol.* Internet Protocol ("IP") could act as the communication protocol between the AllVid adapter and navigation devices. Like Ethernet, IP is the *de facto* standard protocol for data transmission, and current and next-generation audio-visual equipment is capable of handling IP communication. As a widely adopted protocol, IP is familiar to hardware and software developers, which would allow the retail market to flourish for smart video devices. We seek comment on whether IP would be the best choice for an AllVid communication protocol. We also seek comment on any other communication protocols that could serve as a standardized communication protocol between AllVid adapters and retail navigation devices.

[47] Public Knowledge et al Petition for Rulemaking, CS Docket No. 97-80, GN Docket Nos. 09-47, 09-51, and 09-137, at 35 (filed Dec. 19, 2009).

[48] *See infra* ¶¶ 25-36.

28. *Encryption and Authentication*. Both the MPAA and CableLabs have approved digital transmission content protection over Internet protocol ("DTCP-IP") technology as an acceptable method of content encryption to prevent content theft, and it is the content protection scheme used in the Digital Living Network Alliance ("DLNA") standard. For these reasons, we believe that the DTCP-IP standard would be a logical choice for content encryption and device authentication, and we seek comment on that assessment. We also seek comment on whether it would be practical to give each navigation device its own specific key.[49] We believe that this could prevent a situation in which entire model classes of navigation devices would need to be deauthorized in the event that a key were compromised.[50] Should the Commission select a party to administer the public key database in the same manner that the Commission handled the white spaces database,[51] or would the relevant industry parties be able to agree on a third party to handle maintenance of a public key database? In the event that commenters are in favor of a third party maintaining the public key database, we seek proposals regarding parties that can handle that task. We seek comment on the ideas presented here with respect to encryption and authentication. We seek comment also on any other proposals that could serve the encryption and authentication functions in an AllVid-connected home network.

29. *Content Ordering and Billing*. At least one party has indicated that MVPDs need the ability to verify that their subscribers have actually ordered pay-per-view and subscription content.[52] What specific methods could the AllVid and navigation device use to facilitate ordering of pay-per-view and subscription content? We envision that the AllVid adapter would perform video rendering for the purpose of verifying a subscriber's purchase of MVPD content such as Video on Demand ("VOD") or a subscription service. We seek comment on these issues, including any other proposals that would allow MVPDs to verify that a subscriber wishes to purchase a specific MVPD service.

30. *Service Discovery*. TiVo suggests that Universal Plug and Play ("uPnP") protocols would be "an obvious technology choice for service discovery."[53] TiVo explains that the only protocols that the Commission would need to adopt for service discovery are "*gateway advertisement*, which allows a gateway to announce its presence to consumer devices on the home network, and *service browsing*, in which a consumer device can browse and access the available services on the gateway."[54] We seek comment on TiVo's proposal and invite commenters to propose any other protocols that would allow a navigation device to discover MVPD content on a home network with an AllVid adapter. For example, to achieve the efficiencies that come with switched-digital video, devices attached to a cable network need to inform the cable headend when a subscriber stops watching a program. What protocols would be

[49] At its most basic level, authentication is a process by which "Party A" sends information that can be decrypted only if "Party B" verifies its identity. This process is achieved by using a complex mathematical algorithm to compare a publicly available "public key" number to a proprietary "private key" number known only to Party B. In the navigation device context, authentication can be used by MVPDs to ensure that a device connected to the network is authorized to access MVPD content and will respect the copy protection policies related to that content.

[50] Currently, all or a substantial percentage of devices made by a specific manufacturer may share an identical private key. Therefore, if a single consumer electronics device is modified such that it no longer respects the content protection policies related to that content, most or all of the devices sold by its manufacturer would have to be deauthorized, or content sent to that device could be compromised. Providing each device with its own specific key would allow deauthorization of individual devices, which would provide strong security without the need to inconvenience other subscribers who own the same model of device.

[51] *See Office of Engineering and Technology Invites Proposals from Entities Seeking to be Designated TV Band Device Database Managers*, 24 FCC Rcd 14136 (2009).

[52] Letter from Linda Kinney, Vice President, Law and Regulation, Echostar Satellite, LLC, to Marlene H. Dortch, Secretary, Federal Communications Commission, Attachment at 3 (Feb. 22, 2010).

[53] TiVo Comments on NBP PN #27 at 13. Service discovery refers to the protocols that would be used for AllVid adapters and navigation devices to seamlessly recognize each other on a home network.

[54] TiVo Comments on NBP PN #27 at 14 (emphasis in original).

necessary for the AllVid adapter to query whether the navigation device still requires access to the program stream?

31. *Content Encoding.* A reeent controversy over audio-visual codee[55] support has led to heightened awareness about the issue of content encoding.[56] Ideally, navigation devices should be designed to decode content that has been encoded in a number of specified formats and the AllVid adapter should be designed to transfer content in at least one of those formats. This would allow MVPDs to encode their content as they wish without the need for the AllVid adapter to transcode the content, which could make the AllVid adapter more expensive and less energy efficient. We seek comment on whether the Commission would need to specify the formats, and, if so, on the audio-visual codecs that the Commission should require navigation devices to handle.

32. *Intellectual Property.* The Commission seeks comment on intellectual property issues related to proposed standards for the AllVid adapter. How long would it take for the necessary standards to be developed, and what costs would be involved? Would a requirement that all rights holders license their relevant intellectual property on reasonable and nondiscriminatory terms allow the market to flourish and provide adequate incentives for innovation? Does the Commission have the legal authority to mandate such terms? We seek comment on whether patent pools exist for any technologies that the might be adopted. We seek comment on the licensing fees charged by patent holders for these technologies, and which parties hold those rights. We also seek comment on any other intellectual property issues relevant to the AllVid concept.

33. *Other Issues.* The Commission also seeks comment on any additional standardization work that would be necessary to implement the AllVid regime. For example, we seek comment on how the AllVid adapter should resolve resource conflicts. If a subscriber's home is equipped to handle six separate video streams and seven people in the home want to watch programming on seven different devices, which devices take precedence? Should the most recent device to make a request have the ability to override the conflict and choose which device to exclude? We seek comment on innovative ways to resolve device conflicts.

34. Several commenters have highlighted issues regarding how a home network would handle emergency alert system ("EAS") messages, closed captioning data, and MVPD parental controls.[57] We note that there are existing standards to transmit closed captioning data[58] and parental control data[59] for broadcast television and unencrypted cable television. We seek comment on whether these standards can be adapted readily to perform these functions in the AllVid regime or whether new standards

[55] Audio-visual codecs are methods of converting audio-visual signals to digital data and converting the digital data back to an audio-visual signal. Competing codec technologies aim to achieve divergent goals, such as to maintain the quality of the audio-visual signal, compress the data as much as possible so that it occupies a limited amount of bandwidth, or require the encoding and decoding devices to have limited processing power so that they are affordable and energy efficient.

[56] Executives from Apple and Adobe have had a public disagreement about the merits of Adobe's Flash codec and Apple's decision not to include Flash codec compatibility in its iPad device. *See, e.g.*, Rob Pegoraro, *Apple iPad's rejection of Adobe Flash could signal the player's death knell*, THE WASHINGTON POST, Feb. 7, 2010, *available at* http://www.washingtonpost.com/wp-dyn/content/article/2010/02/05/AR2010020501089.html?hpid=news-col-blog&sid=ST2010020501139; Ben Worthen and Yukari Iwatani Kane, *New iPad Puts Focus On Apple's Flash Feud*, THE WALL STREET JOURNAL, Feb. 11, 2010, at B1.

[57] *See, e.g.*, NCTA Reply to NBP PN #27 at 15, Letter from Linda Kinney, Vice President, Law and Regulation, Echostar Satellite, LLC, to Marlene H. Dortch, Secretary, Federal Communications Commission, Attachment at 3 (Feb. 22, 2010).

[58] *See* 47 C.F.R. § 15.122.

[59] *See* 47 C.F.R. § 76.640.

development is necessary. We note that development of a next generation EAS system is underway and seek comment on how EAS messages formatted in the Common Alerting Protocol could be carried in the AllVid system and received by devices.[60] CEA and the Society of Cable Telecommunications Engineers (SCTE) have both adopted standards for the carrying of EAS within the home network.[61] We seek comment on what additional standards work is necessary to assure that retail devices receive and display EAS messages.

35. We seek comment also on whether navigation devices in the AllVid system should include over-the-air ATSC tuners. The Commission's rules require unidirectional digital cable devices to include an ATSC tuner. In the *Second Report and Order*, the Commission concluded that "the public has come to understand that television receivers labeled or marketed as 'cable ready' universally include the capability of receiving over-the-air broadcast service."[62] Would consumers similarly expect this equipment to receive over-the-air broadcast service? Does the Commission have the authority under the All-Channel Receiver Act to impose such a also requirement?[63]

36. We seek comment also on differences in delivery technology that might require specific MVPD providers to include functionality beyond what is necessary for conditional access, provisioning, reception, and decoding of the signal. For example, given the DBS industry's inherently one-way distribution model, DISH Network and DIRECTV have indicated that home gateway devices for DBS would need to include hard drives for video caching to allow their subscribers to view VOD programming instantly and might need to include additional "intelligence."[64] We seek proposals on any network-specific functions that may need to be included in particular operators' AllVid adapters. We also seek comment on how we could enable evolution of the AllVid system, with respect to both the components of the device and the output standards, in order to accommodate technological innovation over time. Finally, we seek comment on any other issues regarding the AllVid regime and specific proposals that would allow the Commission to resolve those issues.

C. AllVid Support Requirements

37. The National Broadband Plan calls for Commission action to require MVPDs who offer digital navigation devices for lease to be prepared to offer AllVid equipment to their subscribers by December 31, 2012.[65] We seek comment on that deadline, including measures that would be effective in enforcing it. To encourage MVPDs to adhere to this deadline, should the Commission take supplemental measures that would apply to MVPDs that are unable to deploy AllVid equipment to all new subscribers and to any subscribers who request AllVid equipment after this deadline (such as denying extensions of certain CableCARD waivers), or do the Commission's existing enforcement mechanisms,[66] which allow

[60] *See Review of the Emergency Alert System; Independent Spanish Broadcasters Association, the Office of Communication of the United Church of Christ, Inc., and the Minority Media and Telecommunications Council, Petition for Immediate Relief*, 22 FCC Rcd 13275 13288.

[61] *See* ANSI/SCTE 162 2009, Emergency Alert Signaling for the Home Network. *See also* CEA-2035, Emergency Alert Metadata for the Home Network (2009).

[62] *Second Report and Order*, 18 FCC Rcd at 20901,

[63] *See* 47 U.S.C. § 303(s).

[64] Letter from Linda Kinney, Vice President, Law and Regulation, Echostar Satellite, LLC, to Marlene H. Dortch, Secretary, Federal Communications Commission, Attachment at 2 (Feb. 22, 2010); Letter from William M. Wiltshire and Michael Nilsson, Counsel, DIRECTV, to Marlene H. Dortch, Secretary, Federal Communications Commission (January 28, 2010).

[65] *See* FEDERAL COMMUNICATIONS COMMISSION, CONNECTING AMERICA: THE NATIONAL BROADBAND PLAN 51-52 (2010).

[66] *See, e.g.*, 47 U.S.C. § 503, 47 C.F.R. § 1.80.

the imposition of forfeitures, provide sufficient incentives for MVPDs to meet such a deadline? How can the Commission prevent an overabundance of waiver requests similar to the ones filed in response to the integration ban, which some have argued have brought about policymaking by waiver?[67]

38. In concept, the AllVid approach would provide a successor technology to CableCARD. While the Commission is separately proposing steps to ameliorate shortcomings in the retail market for CableCARD devices in the interim,[68] we anticipate that AllVid devices could over time replace CableCARD devices on retail shelves. Accordingly, we seek comment on whether the Commission should consider eliminating its CableCARD rules, and if so, the appropriate date for such a change. We seek comment on consumer expectations regarding the lifespan of their devices, and whether the AllVid approach or any other approach could be implemented in a way that limits the number of CableCARD devices that become obsolete.

39. *Navigation Device Economics.* Certain parties suggest that a retail market for navigation devices may be destined to fail because consumers are not interested in owning navigation devices.[69] We seek comment on this assessment, including whether consumers prefer to lease at government-regulated "cost-plus" rates,[70] whether consumers wish to avoid the risk obsolescence of navigation devices, and whether consumers' inability to "port" a retail navigation device when he or she changes MVPDs limits the attractiveness of the retail option. The cable industry has adopted the leasing model, charging customers a monthly fee that allows consumers to avoid a larger upfront cost entailed by a retail purchase. To evaluate the leasing versus retail equipment models, we seek data on consumer behavior when faced with a lease versus purchase decision, concerning navigation devices and analogous consumer electronic devices. We expect that MVPDs will want to continue to offer devices for lease or sale that provide greater functionality than an AllVid adapter. Should we require those devices to attach to the AllVid network, through an adapter? How would our decision on whether operator-provided navigation devices must commonly rely on the AllVid network affect the economics of the retail and leasing markets?

40. What are consumer expectations with respect to "navigation devices?" Traditionally, the Commission and interested parties have considered the term navigation devices to include televisions, set-top boxes (including DVRs), and home theater computers. Do these devices comprise the universe of navigation devices, and if not, what other devices could perform navigation device functions? Are there specific minimum functions that a navigation device needs to perform? Should there be different classifications of navigation devices, and if so, should the Commission dictate the minimum functionality requirements of specific classes? What steps can the Commission take to increase economic and energy efficiencies that will allow consumers to connect fewer devices to their television display by consolidating functionality into one device?[71]

41. Would MVPDs be at an advantage in providing set-top boxes because they could provide home installation whereas consumers typically would have to install devices purchased in the retail market themselves? Do MVPDs earn a profit on home installations or, if not, would self-installations of retail devices by MVPD customers save MVPDs money? We seek comment also on the assertion that the

[67] *See* Letter from Harold Feld, Legal Director, Public Knowledge, to Marlene H. Dortch, Secretary, Federal Communications Commission, CS Docket No. 97-80, at 2 (Oct. 28, 2009).

[68] *See Implementation of Section 304 of the Telecommunications Act of 1996: Commercial Availability of Navigation Devices; Compatibility Between Cable Systems and Consumer Electronics Equipment*, Fourth Further Notice of Proposed Rulemaking, MB Docket No. 97-80, PP Docket No. 00-67 (rel. April 21, 2010).

[69] *See, e.g.*, NCTA Comments on NBP PN #27 at 24-25; Cisco Comments on NBP PN #27 at 7; Motorola Comments on NBP PN #27 at 13-15; DIRECTV Comments on NBP PN #27 at 10-12.

[70] 47 C.F.R. § 76.923.

[71] For example, the Netflix-enabled Blu-ray player allows the customer to access Netflix videos provided over the internet and the ability to watch physical media like a DVD or a Blu-ray player in a single device.

cost of bringing navigation device functionality into television sets exceeds what consumers are willing to pay at retail. We seek data on consumer purchasing behavior regarding home entertainment equipment. To what extent are consumers willing to pay for additional functionalities in the equipment they purchase? Would the AllVid concept change the economics of consumer preferences? How much would an AllVid adapter cost? How much would it cost to add AllVid compatibility to a navigation device? Should the cost of an AllVid adapter and charges for installation by the MVPD be calculated according to the Commission's rate regulation rules under Section 76.923 in rate-regulated communities? Finally, we seek comment on whether economic or technological factors dictate that AllVid adapters would have to be provided by the MVPD, or whether AllVid adapters could be sold at retail, as NCTA has suggested in the past.[72]

D. Alternative Proposals

42. In response to NBP PN #27, several MVPDs expressed reservations about a "home gateway" technology mandate.[73] These commenters suggest that the Commission should encourage market-driven negotiations and standards development to achieve the goals of Section 629. In this vein, we seek alternative proposals to the AllVid concept that could lead to the implementation of a competitive market solution for smart video devices by December 31, 2012. We also seek input on whether the movement of functions away from navigation devices and into the cloud or network might represent a viable alternative.[74] How would the AllVid proposal affect the development of downloadable security? Are there specific incentives that the Commission could create that would expedite market negotiations and address the shortcomings of the current CableCARD regime discussed above?

E. Other Issues

43. *Content Presentation.* Much of the innovation in television reception devices is related to easy-to-use graphical user interfaces;[75] device manufacturers distinguish their products from one another by providing better user experiences.[76] MVPDs argue, however, that a graphical user interface that is standard across its footprint makes consumer education and support easier; they also state that marketing agreements often require the MVPD to provide certain content within the electronic program guide.[77] Providers also argue that multiple graphical user interfaces would create customer confusion with regard

[72] NCTA Comments in CS Docket No. 97-80 at 71-74 (filed Aug. 24, 2007).

[73] *See, e.g.*, DIRECTV Comments on NBP PN #27 at 6-16; Letter from Leora Hochstein, Executive Director, Federal Regulatory Affairs, Verizon, to Marlene H. Dortch, Secretary, Federal Communications Commission at 1-2 (February 18, 2010).

[74] Moving services to the "cloud" in this context refers to moving applications that would traditionally run on a set-top box to run at the cable headend. Cablevision's remote digital video recorder service is an example of a cloud based service: "Cablevision offers a remote storage digital video recorder (RS-DVR) service. To the customer, it functions exactly like TiVo or any other cable company DVR offering, but instead of the recorded shows being stored on the set-top box's hard drive, the shows are stored on Cablevision servers and beamed to customers when they choose to watch them." Chloe Albanesius, *Cablevision's "Remote DVR" Service Ruled Legal*, PC MAGAZINE.COM, August 4, 2008, *available at* http://www.pcmag.com/article2/0%2C2817%2C2327137%2C00.asp. *See also* FEDERAL COMMUNICATIONS COMMISSION, CONNECTING AMERICA: THE NATIONAL BROADBAND PLAN 17 (2010) (defining "cloud computing").

[75] In this context, we use the term "graphical user interface" to refer to the manner in which the menu, electronic programming guide, "widgets," closed captioning, and other visual content that a set-top box would render are assembled and displayed.

[76] *See, e.g.*, *Academy Honors Digeo with Emmy for Moxi Media Center Interface*, BROADCAST ENGINEERING, Dec. 1, 2004, *available at* http://broadcastengineering.com/hdtv/digeo-moxi-emmy-20041201/.

[77] *See* Letter from Linda Kinney, Vice President, Law and Regulation, Echostar Satellite, LLC to Marlene H. Dortch, Secretary, Federal Communications Commission, at Attachment at 3 (February 22, 2010).

to whom subscribers should call with questions about problems associated with the user interface, service, and hardware compatibility.[78] What steps should be taken to minimize any potential for confusion with regard to the appropriate provider of customer service for retail device product performance, warranty, and service-related issues? Given the inherent conflict between innovation and standardization, we seek comment on whether the Commission should adopt rules governing the way in which MVPD content is presented. What steps should be taken to protect agreements between MVPDs and content providers? Is there a way to balance MVPDs' interests in improved customer service and adherence to their marketing contracts against the consumer benefits that result from electronics manufacturers differentiating their products from competitors'? We seek comment on the best way to resolve this issue.

44. We also seek comment on intellectual property issues associated with electronic programming guides. The Consumer Electronics Association asserts that consumers already pay for programming guide data as part of their subscription fees, that the data is not subject to intellectual property protection, and that therefore MVPDs should provide programming guide data that in a form that would allow competitive devices to display the data as they wish.[79] MVPDs disagree, arguing that the intellectual property issues related to electronic programming guide presentation and data are more complex than the Consumer Electronics Association suggests. In addition to seeking comment on the intellectual property issues, we seek specific proposals for solutions or reasonable compromises that could address those issues and achieve the objectives of this proceeding. For example, would it be reasonable for MVPDs to charge separately for guide data, thereby saving subscribers who use third-party data from having to pay for the same data twice?

45. *Authority*. The D.C. Circuit has found that Section 629 gives the Commission broad discretion to adopt regulations to assure a competitive market for navigation devices.[80] Throughout this proceeding, certain parties have argued that the Commission lacks the authority to require MVPDs to disaggregate their programming guides and allow retail devices to "repackage" their content.[81] Section 629 directs the Commission to adopt regulations to assure the retail commercial availability of navigation devices, and the DC Circuit's review has been "particularly deferential" in cases where the "FCC must make judgments about future market behavior with respect to a brand-new technology."[82] We seek further comment on our authority under Section 629 of the Act.[83]

IV. PROCEDURAL MATTERS

A. Ex Parte Rules

46. This is an exempt proceeding in which ex parte presentations are permitted (except during the Sunshine Agenda period) and need not be disclosed.[84]

[78] NCTA Comments on NBP PN #27 at 21-23; DIRECTV Comments on NBP PN #27 at 14-16.

[79] *See* Consumer Electronics Association Reply Comments, CS Docket No. 97-80, PP Docket No. 00-67, at 13 (filed Sept. 10, 2007) (citing *Feist Publications Inc. v. Rural Telephone Serv. Co.*, 499 U.S. 340 (1991)).

[80] *See, e.g.*, *Charter Communications, Inc. v. FCC*, 460 F.3d 31, 40-41 (DC Cir. 2006).

[81] *See, e.g.*, NCTA Comments in CS Docket No. 97-80 at 43 (filed Aug. 24, 2007)

[82] *Melcher v. FCC*, 134 F.3d 1143, 1152-3 (D.C. Cir. 1998).

[83] *See General Instrument Corp. v. FCC*, 213 F.3d 724, 731-2 (DC Cir. 2000); *Charter Communications, Inc. v. FCC*, 460 F.3d 31, 40-41 (DC Cir. 2006); *Comcast Corp. v. FCC*, 526 F.3d 763, 766-7 (DC Cir. 2008).

[84] 47 C.F.R. § 1.1204(b)(1).

B. Filing Requirements

47. Pursuant to sections 1.415 and 1.419 of the Commission's rules, 47 CFR §§ 1.415, 1.419, interested parties may file comments and reply comments on or before the dates indicated on the first page of this document. Comments may be filed using: (1) the Commission's Electronic Comment Filing System (ECFS), (2) the Federal Government's eRulemaking Portal, or (3) by filing paper copies. *See Electronic Filing of Documents in Rulemaking Proceedings*, 63 FR 24121 (1998).

- Electronic Filers: Comments may be filed electronically using the Internet by accessing the ECFS: http://fjallfoss.fcc.gov/ecfs2/ or the Federal eRulemaking Portal: http://www.regulations.gov.

- Paper Filers: Parties who choose to file by paper must file an original and four copies of each filing. If more than one docket or rulemaking number appears in the caption of this proceeding, filers must submit two additional copies for each additional docket or rulemaking number.

  Filings can be sent by hand or messenger delivery, by commercial overnight courier, or by first-class or overnight U.S. Postal Service mail. All filings must be addressed to the Commission's Secretary, Office of the Secretary, Federal Communications Commission.

  - Effective December 28, 2009, all hand-delivered or messenger-delivered paper filings for the Commission's Secretary must be delivered to FCC Headquarters at 445 12th St., SW, Room TW-A325, Washington, DC 20554. All hand deliveries must be held together with rubber bands or fasteners. Any envelopes must be disposed of before entering the building. The filing hours are 8:00 a.m. to 7:00 p.m.

  - Commercial overnight mail (other than U.S. Postal Service Express Mail and Priority Mail) must be sent to 9300 East Hampton Drive, Capitol Heights, MD 20743.

  - U.S. Postal Service first-class, Express, and Priority mail must be addressed to 445 12th Street, SW, Washington DC 20554.

People with Disabilities: To request materials in accessible formats for people with disabilities (braille, large print, electronic files, audio format), send an e-mail to fcc504@fcc.gov or call the Consumer & Governmental Affairs Bureau at 202-418-0530 (voice), 202-418-0432 (tty).

48. *Availability of Documents.* Comments, reply comments, and *ex parte* submissions will be available for public inspection during regular business hours in the FCC Reference Center, Federal Communications Commission, 445 12th Street, S.W., CY-A257, Washington, D.C., 20554. These documents will also be available via ECFS. Documents will be available electronically in ASCII, Microsoft Word, and/or Adobe Acrobat.

49. *Accessibility Information.* To request information in accessible formats (computer diskettes, large print, audio recording, and Braille), send an e-mail to fcc504@fcc.gov or call the FCC's Consumer and Governmental Affairs Bureau at (202) 418-0530 (voice), (202) 418-0432 (TTY). This document can also be downloaded in Word and Portable Document Format (PDF) at: http://www.fcc.gov.

50. *Additional Information.* For additional information on this proceeding, contact Steven Broeckaert, Steven.Broeckaert@fcc.gov, Brendan Murray, Brendan.Murray@fcc.gov, of the Media Bureau, Policy Division, (202) 418-2120, or Alison Neplokh, Alison.Neplokh@fcc.gov, of the Media Bureau, Engineering Division, (202) 418-1083.

V. ORDERING CLAUSE

51. **IT IS ORDERED** that, pursuant to Sections 1, 4(i) and (j), 303, 403, 601, and 629 of the Communications Act of 1934, as amended, 47 U.S.C. §§ 151, 154(i) and (j), 303, 403, 521, 549, this *Notice of Inquiry* **IS ADOPTED**.

FEDERAL COMMUNICATIONS COMMISSION

Marlene H. Dortch
Secretary

APPENDIX

AllVid Concept Illustrations

AllVid as a "set back" adapter:

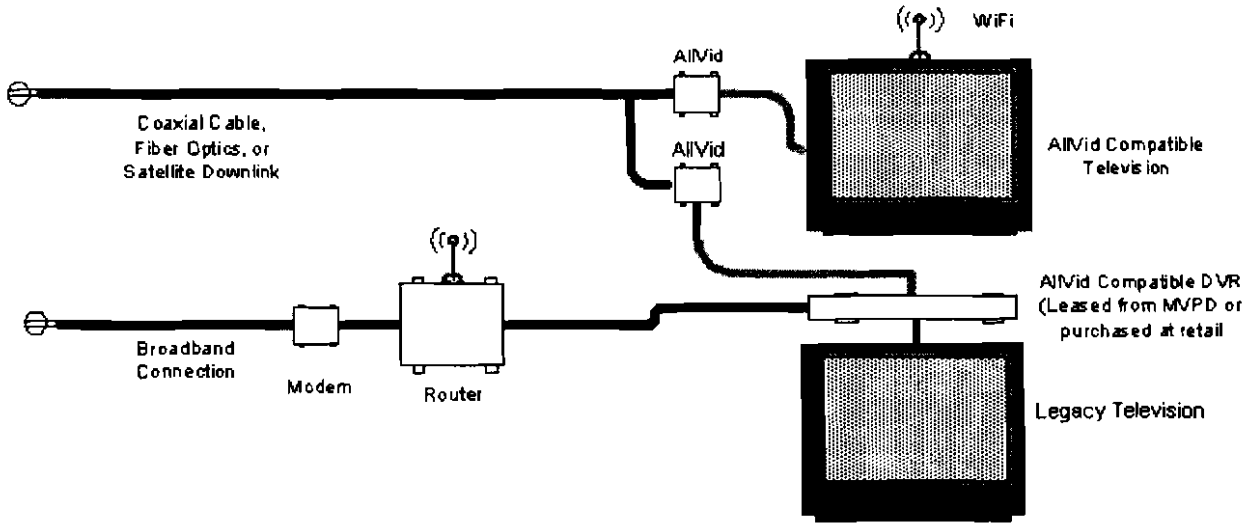

AllVid as a "home gateway":

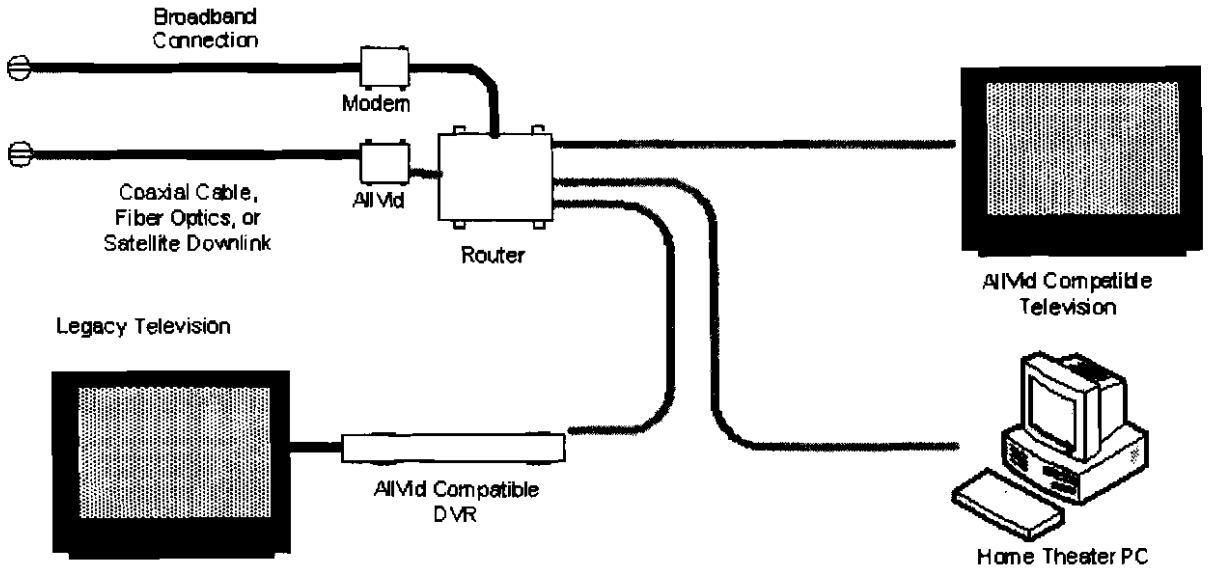

STATEMENT OF CHAIRMAN JULIUS GENACHOWSKI

Re: *Video Device Competition*, MB Docket No. 10-91; *Implementation of Section 304 of the Telecommunications Act of 1996: Commercial Availability of Navigation Devices*, MB Docket No. 97-80, *Compatibility Between Cable Systems and Consumer Electronics Equipment*, PP Docket No. 00-67.

Today the Commission acts to increase video choices for consumers, and unleash competition and innovation in the retail market for smart video devices. These are devices that consumers can use to select and enjoy video programming, not only from pay TV services but increasingly also from the Internet or over-the-air broadcasts. Consumers want devices that can navigate the universe of video programming from all of these sources and present the choices to them in a simple, integrated way. They also want to know that they can buy a device and not have to replace it if they change video providers.

Congress directed the Commission to foster a competitive retail market for such devices. We act today to fulfill that mandate. When Congress enacted Section 629, the Commission and the industry first tried to implement it through a technology called the CableCARD. That approach has not achieved its objective. Only a tiny fraction of all set top boxes in use in American homes include CableCARDs, and only two companies – TiVo and Moxi – today sell CableCARD-enabled video devices through retail outlets that integrate pay TV programming or Internet content.

The Notice of Inquiry we adopt today proposes a new approach designed to better serve consumers and promote competition and innovation. Under the proposed approach, a pay-TV service provider would deliver its signals to a small adapter on the customer's premises that would present a standard interface to all consumer devices. The adapter could be connected to the customer's TVs, computers, or other devices that can display multichannel video programming and Internet content.

The idea is to promote standards and simplicity that will have four outcomes. First, it will enable and empower consumer equipment makers, software developers, and other innovators and entrepreneurs to design new smart devices and applications that can work with any pay TV service, thus greatly expanding consumer choice. Second, it will allow pay TV providers to innovate in their networks and compete in offering improved subscription services without forcing consumers to replace home devices. Third, it will generate significantly greater competition and consumer choice. And fourth, it will promote greater broadband use and adoption as consumers enjoy the benefits of competition and of linking pay TV and Internet content. Just as a shopping mall presents customers with numerous retail outlets, smart video devices would offer viewers a single window into pay TV content and Internet content – as well as content that a viewer has already bought or archived.

We recognize that today's proposal is only one possible approach, and we seek comment on other ways to achieve the goals I've described. Unlocking innovation in and around smart video devices will drive broadband use and investment, and increasing consumer choice, promoting economic growth and job creation. Whatever approach we choose, prompt action will enable consumers to take full advantage of the expanded programming options offered by digital video services and the growing array of video available on the Internet.

The second item we are adopting is a Notice of Proposed Rulemaking to make the CableCARD regime work better in the interim before a successor approach is in place. We propose rule changes that would improve the transparency of CableCARD charges, streamline installation procedures, and increase the functionality of retail CableCARD devices. Consumers would be able to see that they are paying the same for a CableCARD used with a retail device as for one used with a device leased from the cable operator.

Installation and support for a CableCARD used in a retail device would cease to be more inconvenient than for one used in a leased device. And cable operators would be required to offer CableCARDs that enable a retail device to record one program while displaying another. These simple changes, which we aim to implement promptly, should have a direct and immediate impact on effectiveness of the CableCARD regime while we work on its replacement.

Taken together, these actions are essential and important steps to bringing greater competition and innovation to this critical part of our media landscape.

STATEMENT OF
COMMISSIONER MICHAEL J. COPPS

Re: *Video Device Competition*, MB Docket No. 10-91; *Implementation of Section 304 of the Telecommunications Act of 1996: Commercial Availability of Navigation Devices,* CS Docket No. 97-80, *Compatibility Between Cable Systems and Consumer Electronics Equipment*, PP Docket No. 00-67.

Here we continue with more steps to implement the National Broadband Plan. One lesson we learned from the incredible research and analysis that went into the Plan is that video content will clearly be an important driver of broadband adoption. And the Plan also suggested some creative pathways--dare I say gateways?--to help get us there. One of these ideas is a dynamic "integrated user interface" so that consumers will have unlimited choice in content. That term--"integrated user interface"--is about as explanatory as "network neutrality," so not the least part of an ingenious plan is the much better terminology for a "gateway device" that can open up new worlds of content and services for consumers. We are moving to a world where consumers will be able to watch the content of their choice on the platform of their choice. A lot of folks have worked on this idea and I thank them all, and I want to take special note of the public interest groups in their comments for the National Broadband Plan that encouraged us down this path. They had a front row seat for the CableCARD saga and they appreciated that we truly needed something different.

The once-shining promise that Section 629 of the 1996 Communications Act held out for greater competition has gone largely unfulfilled. Thus far, the CableCARD endeavor has produced more consumer frustration--not to mention agency travail--than it has competition. The intent, we all recall, was to spur on a competitive retail market to provide consumers more choice. But it didn't happen. In many ways, the outcome of our pursuit has been the opposite of what was intended. The path to the retail market has been, for many reasons, obstructed at nearly every turn. Something is clearly not working as intended when consumers encounter such disparities between the cost, installation and support of CableCARD devices for those who purchase a retail device and for those leasing the cable provider's set-top box. The push for gateway devices has the potential to spur real competition to bring amazing new technology to the marketplace.

While the Commission is thinking creatively about this exciting new gateway and other ideas and gathering a record to encourage them, we are also looking toward correcting some of the shorter-term problems and disparities that our present set-top box and CableCARD worlds have brought us. The rules proposed in the Fourth Further Notice have the potential to mitigate some of these shortfalls until the next-generation solution--the goal of the NOI--becomes available. Part of this would be greater transparency and making sure that consumers understand the costs associated with both retail and leased devices. Under a proposed rule, cable companies would be required to list their fees for the CableCARDS on a line-item of the bill. Also, instead of processing interface waivers on an individual basis, we open the door to more innovation by allowing connectivity in varying interfaces. Manufacturers would have more options in terms of specific interfaces, thereby enabling consumers to connect to the Internet on a host of devices in their homes. We also raise the issues associated with cable companies transitioning their systems to all-digital, which would help make better use of the spectrum and encourage higher broadband speeds and more high-definition channels for consumers.

Whether we are talking new gateway technologies or short-term fixes for short-term issues, we want at all costs to avoid yet another cycle of delay and dead-ends that result only in less competition, higher prices and fewer choices for consumers. Too much is at stake here to countenance more delays and obstructions. In order for the gateway device or the interim fixes to work and work quickly, the Commission and the private sector are going to need to roll up their sleeves, work together and reach consensus on what will spur innovation and competition and what will improve the consumer experience.

I look forward to this process. It is, all will note, a particularly ambitious one. To meet our timeline will require some true private sector-public sector coordination and partnering. But this is exactly what these digital times call for--aspirational objectives, expeditious actions, and everyone pulling together for the common good. That's the "gateway" that will bring us a truly gateway device!

STATEMENT OF
COMMISSIONER ROBERT M. MCDOWELL

Re: *Video Device Competition*, MB Docket No. 10-91; *Implementation of Section 304 of the Telecommunications Act of 1996: Commercial Availability of Navigation Devices,* CS Docket No. 97-80, *Compatibility Between Cable Systems and Consumer Electronics Equipment,* PP Docket No. 00-67.

Fourteen years ago, Congress directed the Commission to adopt regulations to "assure the commercial availability" to multichannel video consumers of "navigation devices" – a term that includes set-top boxes, "interactive communications equipment," and other types of devices that subscribers use to access video programming and other services offered over the multichannel provider's transmission system. In plain English, when Congress included Section 629 in the Telecommunications Act of 1996, it sought to create a competitive market for navigation devices that would give consumers the option of going to their electronics retailer to choose a set-top box or similar devices that offer the features they want, rather than having to use the boxes supplied by their cable operator or other multichannel video programming distributor ("MVPD"). The Commission responded by crafting rules that required cable operators to separate the security and conditional access functions of their service from the actual delivery of video and other programming. This "integration ban" is embodied in the Commission's existing CableCARD rules.

To be blunt, the CableCARD approach to implementing Section 629 has been disappointing. Although the Commission has made some progress in trying to bring Congress' vision to reality, the fact remains that a very large majority of consumers continue to rely on equipment supplied by their pay TV providers. It is another example of an unintended consequence of regulation. I support the two initiatives before us now – a Further Notice of Proposed Rulemaking ("FNPRM") to examine the CableCARD rules and a new Notice of Inquiry ("NOI") to explore possible alternatives to our current approach. Each asks a number of good questions about what has, or has not, worked in the marketplace to date while probing into the reasons behind those developments. For example, would consumers be more inclined to seek out CableCARD-compliant devices if monthly bills separately broke out the cost of the operator-provided box from the charge for the CableCARD pre-installed in that box? Is a truck roll really necessary to install a CableCARD in a box acquired at retail? And, perhaps most important of all, what do consumers consider in weighing whether to lease a box from their MVPD as opposed to buying a box from a third-party provider? How much are technical challenges and fear of being "stuck" with soon-to-be-outmoded hardware or software affecting consumers' decisions? For me, another question is whatever happened to downloadable security? Answers to these queries will help us decide what we can do to modify today's CableCARD regulations effectively – and to address the challenges going forward under Section 629, as technological innovation continues to outpace the government's ability to keep up.

Asking questions, however, should not be taken as a signal that we have prejudged the answers. In particular, I wonder about the assumptions underlying the so-called "All Video" or "AllVid" proceeding, so I am pleased that we are opening that docket with a wide-ranging inquiry. The concept was previewed in the National Broadband Plan as a lever to help spur greater broadband deployment – the notion being that the millions of televisions in American homes connected to cable, satellite or some other form of multichannel video service could provide a wider gateway for residential broadband demand, investment, innovation and deployment. The NOI tees up a specific proposal for comment: new rules requiring the development and deployment of a small device dubbed an "AllVid adapter" that would combine the MVPD's security and decryption functions with an open-standards interface to which a variety of devices from many different providers could connect. The vision is that these devices, in turn, could provide consumers with all manner of Internet-based content and applications from third-party sources as well as the video and other offerings from the MVPD.

The idea of accessing the Internet through the TV screen is certainly attractive – so attractive, in fact, that the marketplace already appears to be delivering on that vision without any help from the government. A quick Internet search revealed more than a dozen different devices available to consumers who wish to bring some or all of the Internet to their television screens, ranging from specialized web video products and software applications to elaborate home theater PCs and even online gaming consoles.

And yesterday, in an unscientific effort to learn more about the current state of this rapidly evolving marketplace, I took a little field trip to a local "big box" electronics store to see what kind of Internet TV products are on the shelves right now. I found options ranging from the latest flat-screen TVs preloaded with specific web-based offerings to simpler devices that can move content from the open Internet straight to the TV screen via "high definition multimedia interface" ("HDMI") cables or through simple wireless technologies. The most popular products cost $250 or less, and the store was having trouble keeping them in stock. The salespeople reported that in the year and a half since some of these products appeared on the market, they are among the top three video accessories the store sells. Consumers are using them to enjoy "over the top" web-based video on their wide-screen digital TV screens, thereby not only bypassing the video offerings of traditional MVPDs but favoring their new direct competitors as well. In fact, according to the latest comScore data, Americans downloaded more than 28 billion videos in February 2010, more than double the number of downloads during the same month a year ago. It's not difficult to see the implications of this trend for the future of broadband technologies and the MVPD marketplace.

The lesson from my field trip shows us that the marketplace can and does respond to consumer demand with an array of innovative options and price points that we cannot hope to replicate through regulation. As I review the comments submitted in response to these new Notices, I will bear in mind the need to remain humble about the government's ability to predict the pace and direction of technological developments. If nothing else, our experience in implementing Section 629 should remind us of the value of modesty in rulemaking.

I thank the staff of the Media Bureau for their hard work on the two Notices, and I look forward to reviewing the information and analyses that commenters will provide to us.

STATEMENT OF COMMISSIONER MIGNON L. CLYBURN

Re: *Video Device Competition*, MB Docket No. 10-91; *Implementation of Section 304 of the Telecommunications Act of 1996: Commercial Availability of Navigation Devices*, CS Docket No. 97-80, *Compatibility Between Cable Systems and Consumer Electronics Equipment*, PP Docket No. 00-67.

By unveiling today's NPRM and NOI concerning navigation devices, the Commission is taking important steps towards retooling a set-top box regime that has long been broken. Just one measure of this failure is the fact that, since July 1, 2007, cable operators have deployed more than 18.5 million leased devices pre-equipped with CableCARDs, compared to only 489,000 CableCARDs installed in retail devices connected to their networks. The proof, as they say, is in the pudding.

I therefore applaud the Chairman and his staff for acting swiftly on the recommendations in the National Broadband Plan to find a new solution to a too-familiar problem. If we are to live up to the directive by Congress to the Commission in Section 629, we must engage with industry and listen to consumers in order to develop more effective preconditions to an environment in which navigation devices can flourish at the retail level.

The time has undoubtedly arrived for us to examine the potential for *any* electronics manufacturer to offer smart video devices at retail that can be used with the services of *any* MVPD. In addition, given that the current process for obtaining MVPD certification is so cumbersome and expensive, I am eager to explore ways in which such manufacturers can forego unnecessary coordination and negotiation with MVPDs. These elements of a new video device landscape – however designed – can help us achieve what is best for consumers: a competitive retail market where innovation is not only permitted but championed.

In the interim, the CableCARD NPRM seeks to address the most immediate flaws in the current system. The Media Bureau has devised what appears to be a comprehensive set of basic proposals that can help consumers while we attempt to revamp the entire system. Important suggested changes include reforms to the handling of switched-digital technology, the industry's pricing and billing practices for CableCARDs, CableCARDs installation, and the process of CableCARD device certification. I look forward to input from all parties to help guide us towards the most effective and creative interim solutions to this broken regime.

I encourage all industry players to follow the lead of those who have already signaled their constructive involvement in the process. I look forward to engaging on these issues, and will rely on industry and public interest experts alike as we take a second crack at fulfilling the mission given to us by Congress.

STATEMENT OF
COMMISSIONER MEREDITH A. BAKER

Re: *Video Device Competition*, MB Docket No. 10-91; *Implementation of Section 304 of the Telecommunications Act of 1996: Commercial Availability of Navigation Devices*, CS Docket No. 97-80, *Compatibility Between Cable Systems and Consumer Electronics Equipment*, PP Docket No. 00-67.

I support these two items to examine steps to improve how our existing CableCARD regime works and to begin an exploration of a long-term replacement for the CableCARD. The Commission's actions today signal something that consumers and consumer electronic manufacturers decided some time ago: the retail CableCARD market has not worked as we intended. There are, however, over 400,000 retail CableCARDs deployed, and consumers are still buying retail CableCARD devices. I, therefore, support the effort in the Notice to consider steps to streamline and improve the provisioning and installation of CableCARDs to benefit those consumers. Given our decision to ultimately replace the CableCARD regime, I hope we can avoid taking any steps that would significantly increase the implementation and operational costs on cable operators, consumer electronic manufacturers, or consumers to support CableCARD devices.

As we consider a long-term solution, I hope that we recall valuable lessons from the CableCARD regime. First, our technological mandates come with significant costs. By one estimate, the cost of CableCARD compliance for the cable industry alone – costs passed on to cable consumers – has totaled nearly one billion dollars.[1] Second, we should be careful not to mandate particular technological solutions that would freeze into place the current state of technology. We need to craft flexible rules that foster continued investment and innovation both on the network and device level. We should also not inhibit the ability of MVPDs to continue to invest in innovative devices and offerings. There are numerous promising collaborative efforts in home network and industry standard setting bodies to provide consumers with greater flexibility and options in how to view their video content. Hopefully, that spirit of collaboration between MVPD and consumer electronic companies will carry over to our consideration of a post-CableCARD regime.

Our long-term objective for these proceedings should be clear from the start. We have an obligation under section 629 of the Act to "assure the commercial availability" of retail navigation devices to access MVPD programming. Section 629's statutory mandate intended to provide consumers navigation device options at retail, not dictate how they view video programming at home. Nor did section 629 intend to compel consumers to purchase navigation devices. We should be mindful that not all consumers want the latest technology: over 100 million televisions in cable households today are not connected to a set-top box at all. Consumers may also prefer certain conveniences—lower upfront costs, ease of installation and upgrade—that come with leasing devices.

On the other end of the spectrum, we have also seen a great increase in interest and availability of Internet-delivered video programming from multiple vendors through dedicated devices, video game consoles, and Blu-ray players. Consumer electronic manufacturers are providing direct Internet connectivity to the television; cable, satellite and telco video providers are innovating and investing in home network solutions, over-the-top video, and greater interactivity and functionality in leased devices. Importantly, the bulk of this new investment and innovation is occurring in the competitive market without any Commission intervention, separate and apart from our CableCARD regime.

[1] Letter from Neal M. Goldberg, Vice President and General Counsel, National Cable & Telecommunications Association, to Marlene H. Dortch, Secretary, Federal Communications Commission, CS Docket No. 97-80, at 14 (December 22, 2009).

Lastly, the National Broadband Plan framed this issue as one of broadband adoption. I agree that our set-top box policy does relate to broadband, but I believe that it relates primarily to broadband deployment, not adoption. In order to provide higher speeds and more advanced broadband offerings, cable operators need to reclaim spectrum dedicated to video programming without eliminating the hundreds of video channels available to subscribers today. We should be vigilant that our set-top box policy does not unintentionally frustrate the efforts of cable operators investing in their next-generation broadband networks by putting up roadblocks to an affordable transition to all-digital operations or raising uncertainty about investment in more efficient technologies like switched digital video.