Before the
Federal Communications Commission
Washington, D.C. 20554

In the Matter of	)	
	)	
Interoperability, Out of Band Emissions, and	)	
Equipment Certification for 700 MHZ Public	)	
Safety Broadband Networks	)	PS Docket No. 06-229
	)	
Implementing a Nationwide,	)	
Broadband, Interoperable Public	)	
Safety Network in the 700 MHz	)	
Band	)	

COMMENTS
OF
ALCATEL-LUCENT

Michael McMenamin

1100 New York Avenue, NW, Suite 640
Washington, D. C. 20005
(202) 316-5916

July 19, 2010

TABLE OF CONTENTS

TABLE OF CONTENTS

SUMMARY 2

I. INTEROPERABILITY 4

II. ROAMING 6

III. PRIORITY ACCESS 9

IV. SYSTEMS CHARACTERSISTICS, INTERFACES AND TESTING 9

V. SECURITY 10

VI. PERFORMANCE, RELIABILITY, CAPACITY AND COVERAGE 11

VII. NATIONWIDE CORE 11

VIII. NETWORK OPERATIONS, ADMINISTRATION, AND MAINTENANCE 12

IX. OUT-OF-BAND EMISSIONS 12

X. EQUIPMENT CERTIFICATION 13

III. CONCLUSION 15

SUMMARY

As a preliminary matter, Alcatel-Lucent welcomes this opportunity to participate in this proceeding, which will have a profound impact on the future of public safety broadband deployments. The Federal Communications Commission's choice of Long Term Evolution ("LTE") as the common air interface for public safety was the initial first step towards creating a broadband network that Congress and the 9/11 Commission envisioned. No less important is the need for this nation's first responders to have interoperability with the ability to seamlessly roam across public safety networks, as well as their commercial partners networks. This proceeding lays the foundation for future public safety deployments and moves us ever so closer to a nationwide public safety network.

Specifically, Alcatel-Lucent believes that desired applications specified in the NPSTC Broadband Task Force Report ("NPSTC BBTF") should not be considered for initial waiver deployments. We generally agree with the proposed list of required applications specified in the NPSTC BBTF with two notable exceptions that SMS/MMS should be excluded and that land mobile radio gateway devices should not be required initially.

In regards to roaming, we believe that handoff and roaming between public safety LTE networks as well as with commercial LTE networks can be covered by existing Rel. 8 of the 3GPP standards. In addition, with regards to PLMN id's ("Public Land Mobile Network Identifier"), we believe that one PLMN id per State or possibly one for several States will adequately meet public safety's requirements. As for priority access, we recommend that the Emergency Response and Interoperability Center ("ERIC") define a global approach to the use of LTE's Allocation and Retention Priority and QoS Class Identifier to facilitate priority access services for public safety networks. Further, in order to ensure interoperability requirements are met, Alcatel-Lucent recommends that ERIC define all interface specifications required for interoperability.

Moreover, security requirements for public safety LTE networks should not implement all optional features in 3GPP TS 33.401, but instead should follow the guidelines specified in NPSTC's BBTF Report. Also, in the absence of specific performance requirements needed to support the set of required broadband applications specified in the *Waiver Order*, we believe jurisdictions are in the best position to set their own requirements for network deployment as dictated by local requirements and most notably their deployment budgets. Finally, commercial service providers deal with evolving 3GPP standards on an ongoing basis. Public safety can benefit from their efforts to make sure that standards are backwards compatible and that manufacturers provide equipment that can adopt later 3GPP standards through simple software upgrades.

Before the
Federal Communications Commission
Washington, D.C. 20554

In the Matter of	)	
	)	
Interoperability, Out of Band Emissions, and Equipment Certification for 700 MHZ Public Safety Broadband Networks	)	PS Docket No. 06-229
	)	
Implementing a Nationwide, Broadband, Interoperable Public Safety Network in the 700 MHz Band	)	

To: The Commission

COMMENTS OF ALCATEL-LUCENT

Alcatel-Lucent welcomes this opportunity to respond to the Federal Communications Commission ("FCC/Commission") Public Safety and Homeland Security Bureau's *Public Notice* seeking "comment on interoperability, out of band emissions, and equipment certification surrounding public safety broadband network interoperability which will serve as the basis for final rules for the public safety 700 MHz broadband network."[1] We agree that the release of the *Waiver Order*[2] granting

[1] *Public Safety and Homeland Security Bureau Seeks Comment on Interoperability, Out of Band Emissions, and Equipment Certification for 700 MHZ Public Safety Broadband Networks, Public Notice,* PS Docket No. 06-229, DA 10-884, ¶ 1 (rel. May 18, 2010) ("*Public Notice*").

[2] *See* Requests for Waiver of Various Petitioners to Allow the Establishment of 700 MHz Interoperable Public Safety Wireless Broadband Networks, PS Docket 06-229, *Order*, FCC 10-xx (rel. May 12, 2010)("*Waiver Order*")(granting waivers for: Adams County, CO, Alabama, Boston, MA, Northern California Consortium (Oakland, San Francisco, and San Jose), Charlotte, NC, Chesapeake, VA, District of Columbia, Hawaii and Counties of Maui, Hawaii, Kauai, and City and County of Honolulu, Iowa, Los Angeles County, Mesa, AZ and TOPAZ Regional Wireless Cooperative Mississippi, New Jersey, New Mexico, New York City, New York State, Oregon, Pembroke Pines, FL, San Antonio, TX, Seattle, WA, Wisconsin Consortium (Calumet, Outagamie and Winnebago Counties)).

conditional waivers to twenty one public safety entities to deploy early using a common air interface Long Term Evolution ("LTE"), and the subsequent release of this Public Notice are significant steps towards developing a nationwide public safety broadband network. Alcatel-Lucent remains steadfast in support of a nationwide interoperable broadband public safety communications network and offers these comments in support of reaching that goal.

I. Interoperability

Alcatel-Lucent believes that desired applications specified in the NPSTC Broadband Task Force Report ("NPSTC BBTF Report")[3] should not be considered for initial waiver deployments. We generally agree with the proposed list of required applications specified in the NPSTC BBTF Report with two notable exceptions:

1. We believe that SMS/MMS should be excluded as there are currently several different standards implementations available to implement this functionality, and the Emergency Response Interoperability Center ("ERIC") should first make a recommendation on the desired implementation to ensure interoperability. To insure future compatibility among public safety networks and to facilitate roaming onto commercial wireless networks, Alcatel-Lucent recommends using an IMS-based SMS/MMS solution; and

2. Since the initial public safety deployment is focused on data, and not voice, land mobile radio ("LMR") gateway devices should not be required initially.

We also recommend that further refinement is needed regarding operational expectations of the status/information homepage for visitors to assure consistent implementation across public safety deployments, as this may potentially interact with the LTE access and the core network. While several mechanisms are available to support this capability, as used in hotel Wi-Fi networks, the requirements for this capability must

[3] *See* National Public Safety Telecommunications Council, 700 MHz Public Safety Broadband Task Force Report and Recommendations (2009), *available at* http://www.npstc.org/documents/700_MHz_BBTF_Final_Report_0090904_v1_1.pdf.

be further defined to insure consistency of implementation across the nationwide footprint. Several factors must be addressed regarding definition of this capability to insure consistent behavior when a user is roaming, including:

- Does a user automatically get sent to their home PDN-GW (Packet Data Network Gateway) when registering on the network, or is a local breakout roaming capability employed to direct them to the visited PDN-GW?

- Is the local entity permitted to provide any override controls to limit access to visiting users? Does the home page need to include some policy management controls, forcing the user to register before getting connectivity access, or is it purely for information purposes?

- Is this web portal page linked to the incident command system? For example, does an incident commander have the ability to authorize or deny specific users and adapt their priority level?

In addition, further detail is needed regarding the implementation on how quality of service ("QoS") and priority service applications will interact with the network in order to achieve interoperability, both for home network operation, as well as while roaming in another region. It would be highly desirable if a consistent approach for implementing QoS and priority access is defined, and that treatment of QoS and priority service applications are predictable in the visiting network, if indeed the treatment in the visiting network would differ from the home network.

Further, it is important to recognize that a technology such as LTE is continuously evolving, as demonstrated by the multiple standards releases that require backward compatibility. Any infrastructure upgrade, such as the introduction of 3GPP Release 9 or 10 features into the network would not prevent 3GPP Release 8 ("Rel. 8"), December 2009, devices from accessing the network. However, Rel. 8 devices will not necessarily benefit fully from new features available in subsequent releases.

With respect to a jurisdiction's compliance with ERIC's rules, it may be appropriate for ERIC to generate test profiles or a requirements compliance matrix, which would be filled out by the suppliers as a declaration of good faith allowing vendors to self-test in their own laboratories. Since the LTE technology being adopted for public safety broadband is being sold to commercial providers that already require a multitude of testing to ensure commercial interoperability, we believe that public safety can benefit from such "economies of scale." Duplication of these tests is certainly not useful or cost-effective as this will drive up vendor commercialization costs.

II. Roaming

In our opinion, handoff and roaming between public safety LTE networks as well as with commercial LTE networks can be covered by existing Rel. 8 standards assuming end-users devices will support the appropriate frequency bands. This will require roaming agreements to be established for each public safety provider and the selection of a clearinghouse entity for public safety, as well as appropriate security mechanisms among the networks involved. Inter-RAT ("Radio Access Technologies") handoff to technologies such as GSM, UMTS, HSPA, and CDMA is considerably more complicated and will benefit from performance enhancements techniques that are part of 3GPP Release 9 specifications. Thus, Alcatel-Lucent recommends that Inter-RAT not be mandated for the initial early deployments.

In order to further facilitate roaming amongst LTE networks, Alcatel-Lucent recommends that User Equipment ("UE") interfaces comply with Rel. 8 December 2009 for initial trials and deployments and as a minimum requirement for device backwards

compatibility as the network evolves. By requiring common minimum standards compliance for devices, interoperability will be facilitated with multiple vendors' systems.

Regarding PLMN id's ("Public Land Mobile Network Identifier"), Alcatel-Lucent suggests one PLMN id per State or possibly one for several States. In addition, a few large metropolitan areas, which can deploy their own dedicated public safety LTE networks, will require an individual PLMN id. In addition, we believe that the use of a small number of PLMN ids versus a single PLMN id will ease the management aspects associated with a region's public safety network and allow the use of PLMN ids, for example to settle roaming charges especially with commercial networks, which is a common practice today. Using different PLMN ids aligns with the commercial network model, as opposed to using a single PLMN id with some additional public safety specific mechanism to differentiate within the single PLMN id. This thereby avoids the need for special development of a public safety network. The utilization of PLMN ids also avoids the need for a Subscriber Location Function ("SLF"), and the inherent management aspects associated with keeping SLFs, in different Home Subscriber Systems ("HSSs"), synchronized as subscribers are added and deleted. No relevant standardized solution exists as the original intent of a SLF was to scale beyond a single HSS within a service provider's network, where the service provider's Operations Support System ("OSS") can manage the synchronization.

It is Alcatel-Lucent's network experience that having more than 50-70 public safety networks would create logistical problems and would be economically burdensome due to the large number of LTE Cores that would be required to support these networks. This is using the assumption that most States will have a statewide (or even multiple

States will partner) public safety network, and in addition some major metropolitan areas may have their own network. The FCC should provide rules or guidelines for the introduction of new public safety networks in order to ensure that the number of networks does not become too large.

Further, to aid in roaming across public safety networks, we propose the use of an additional umbrella public safety PLMN id that would be used nationwide, and broadcast by each public safety eNB. This would be in addition to the Home PLMN ("HPLMN") id the eNB serves, so every eNB would broadcast two PLMN ids. The listed PLMN ids in the UE would contain HPLMN, nationwide PLMN, and possibly a few commercial PLMNs for roaming outside the public safety network footprint. In the end, this will simplify UEs roaming across the country, as each UE will have their own HPLMN id and the nationwide PLMN id in its white list, thereby limiting the number of PLMN ids a UE needs to store and avoiding updates of the white list whenever a new public safety PLMN is defined. Of note, networks that support the public safety spectrum and are built using a public/private partnership would also be expected to broadcast the nationwide public safety PLMN id besides their own HPLMN. We also contend that the FCC should identify an owner of the nationwide umbrella public safety PLMN id.

Finally, in regards to commercial roaming, each of the public safety networks PLMN ids should negotiate roaming agreements with commercial service providers. We propose that ERIC create a template roaming agreement to be used to facilitate the agreement process between the jurisdictions and the commercial service providers. This will simplify the negotiations process between public safety and the commercial roaming partner

III. Priority Access

Alcatel-Lucent recommends that ERIC define a global approach to the use of LTE's Allocation and Retention Priority ("ARP") and QoS Class Identifier ("QCI") to facilitate priority access services for public safety networks. The definition should include the treatment of the above parameters even when public safety users roam onto another jurisdiction's network. ERIC should work with commercial service providers to agree on a recommended treatment for ARP and QCI when roaming from public safety networks into commercial networks.

In addition, ERIC should also define a methodology within the 3GPP standards framework for how public safety applications interact with the LTE PCRF and P/S-GW, including roaming implications, so that applications may be developed and enhanced to support QoS and priority access in a timely manner. Alcatel-Lucent believes that standards are available in Rel. 8 to support this functionality.

Further, we believe that the priority access schemes in this context will not be compatible with those deployed over commercial networks, since commercial providers have different network priorities than public safety and are unlikely to accept priority schemes that are desired by public safety. For example, commercial providers probably could provide a much smaller number of ARP values for public safety use and typically do not permit pre-empting consumers. Moreover, we recommend that compatibility with NGN-GETS for government users should be encouraged.

IV. System Characteristics, Interfaces and Testing

To ensure interoperability requirements are met, Alcatel-Lucent recommends that ERIC define all interface specifications required for interoperability. Alcatel-Lucent

submits the attached mobile interface specification to be considered by the Commission in Appendix A as a representative example. Prior to the availability of these interface specifications, the National Institute of Science and Technology proposed test-beds may provide an appropriate place to facilitate interoperability testing. In addition, vendors should be allowed to prove compliance with the Commission's requirements based on pairwise testing (*e.g.* between 2 vendors) at their own facilities.

In regards to the use of a common/single third-party clearinghouse, we recommend that selection criteria would include the ability to support GPRS Tunneling Protocol ("GTP") and Generic Routing Encapsulation ("GRE") tunneling as specified in GSM Association specifications IR.34 v4.4 and IR.77. The clearinghouse must also provide diameter proxy functionality to allow interfacing to HSSs, Policy and Charging Rules Functions ("PCRFs"), and charging systems in other public safety and commercial LTE networks. Internet Protocol Security ("IPsec") or Transport Layer Security ("TLS") should be used to secure the diameter interfaces. As noted earlier, since there needs to be an owner for the nationwide PLMN the third party clearinghouse could be a possible candidate.

V. Security

In regards to security requirements, Alcatel-Lucent does not believe public safety LTE networks should implement all optional features in 3GPP TS 33.401, but instead should follow the guidelines specified in NPSTC's BBTF Report. As per the NPSTC report, "The Radio Resource Control ("RRC – TS 36.311") protocol layer may optionally implement LTE signaling layer security features. The Network Access Stratum (NAS – TS 24.301) protocol layer may optionally implement EPC signaling layer security

features. The Packet Data Convergence Sub layer ("PDCP – TS 36.323") protocol layer may optionally implement user data plane security features. For public safety LTE networks, Alcatel-Lucent recommends these specific optional security layer features in 3GPP TS 33.401 be implemented. We also recommend all the Authentication and Key Agreement ("AKA") procedures in sections 6, 7 and 8 from TS 33.401 be implemented to support authentication and key management, handover, and other relevant security applications.

While 3GPP TS33.401 refers to 33.210 and 33.310, which allows for a multitude of algorithms, *e.g*. Internet Key Exchange version 1 and 2 ("IKEv1", IKEv2). Alcatel-Lucent suggests following 3GPP TS 33.401 recommendation: IPSec ESP ("Encapsulating Security Payload") with IKEv2, certificates and tunnel mode with Security Gateway.

VI. Performance, Reliability, Capacity and Coverage

In the absence of specific performance requirements needed to support the set of required broadband applications specified in the *Waiver Order*, we believe jurisdictions are in the best position to set their own requirements for network deployment as dictated by local requirements and most notably their deployment budgets. In addition, from a reliability standpoint, in order to ensure interoperability between eNBs and EPCs, Alcatel-Lucent recommends the use of MME and SGW pooling for providing geographic redundancy between the eNB and the EPC.

VII. Nationwide Core

The *Waiver Order* requires the use of LTE and the associated EPC for each public safety regional network. As mentioned previously in the roaming section, we believe that

the use of a single PLMN id would require the implementation of public safety specific mechanisms to distinguish regions within the single PLMN id. Further, Alcatel-Lucent envisions several potential Core network models that the Commission should consider:

- A Core owned by a public safety region;
- Multiple regions sharing a single Core;
- A Core hosted (*i.e*. owned and managed) by a separate entity, potentially supporting multiple public safety regions;
- A Core owned by public safety and managed by a separate entity; or
- A Core provided through a partnership with a commercial provider.

In sum, Alcatel-Lucent envisions a nationwide public safety network that uses a limited number of PLMN ids (~60) together with a small number of Cores, given that each PLMN id can only reside on one Core.

VIII. Network Operations, Administration and Maintenance

Alcatel-Lucent believes that Network Operations, Administration and Maintenance ("OA&M") is generally vendor specific and should not be subjected to specific requirements beyond the ones already defined by the various standards bodies, *e.g.* charging, call tracing. In addition, device management should follow the requirements as set forth in 3GPP and Open Mobile Alliance ("OMA") standards.

IX. Out-of-Band Emissions

Alcatel-Lucent supports the Commission's current specification of $43 + 10 \log_{10}P$ as the Out-of-Band ("OOBE") limit for operations in the public safety broadband block. As the same air interface is likely to be used in both the D-block and the public safety broadband block a $43 + 10 \log_{10}P$ rule should be adequate for normal operations, with alike deployments, similar to the approach pursued in other frequency bands (*e.g*.,

cellular or PCS) where no guard band was needed between adjacent licensed broadband blocks. Any attempt at making those OOBE limits more stringent or, by the same token, introduce guard-bands will delay the availability of public safety equipment, devices, and in the end network deployment. From an adjacent interference perspective, devices typically are the weakest component as they generally present relatively poor RF front-end selectivity leading to larger interference picked up by the device. Improvement to a device's RF selectivity can be accomplished through additional costs, but at the expense of a larger physical size for the device.

The risk for adjacent interference, which is always present in wireless networks, can be managed, but it requires clarity from public safety and/or the FCC. For instance, this begs the question, in the public safety context, as to whether reduction (due to interference) in data throughput is more important than data coverage. Ideally, collocating public safety and commercial D-block equipment appears to be the best option to allay fears of any adjacent interference. Absent a public-private partnership, since the collocation of D-block and public safety equipment cannot be guaranteed, a safe approach for public safety deployment would be to prevent a design that results in a mixture of low-height D-block sites and high-height public safety sites in the same service area. The resulting denser public safety network, which would mirror the commercial networks density, should mitigate interference risks.

X. Equipment Certification

Commercial service providers deal with evolving 3GPP standards on an ongoing basis. Public safety can benefit from their efforts to make sure that standards are backwards compatible and that manufacturers provide equipment that can adopt later

3GPP standards through simple software upgrades. Consequently, Alcatel-Lucent expects minimal impact on network equipment deployed prior to adoption of the final rules.

Further, Alcatel-Lucent recommends that the Commission require LTE devices to be compliant with Rel. 8, December 09 standards. In addition, future device evolutions should be required to be backwards compatible with Rel. 8 to assure backwards compatibility with earlier devices for basic functionality.

Today, all commercial carriers have some type of certification process to allow devices to roam onto their networks. Thus, public safety network operators should actively participate in any commercial carrier programs intended to simplify and/or accelerate the certification process, and the Commission should require this.

In order to support public safety roaming onto commercial networks the following criteria should be considered:

- **Device interoperability.** Commercial network roaming partners must support all modes of devices deployed by the public safety network operator. In addition to the band class 14, this requires public safety devices to include other LTE bands, as well as 3G technologies such as HSPA or EVDO Rev A.
- **Coverage in immediate roaming area.** The primary concern for any public safety network operator should be sufficient network coverage in the geographical areas where most roaming is expected to occur. For large areas, the commercial carrier providing optimum roaming coverage may vary throughout the area. The public safety network operator will need to make a judgment as to which commercial carrier provides the best overall coverage.

- **Roaming expenses.** Financial terms may vary between commercial carriers.
- **Availability of priority access.** The public safety network operator should verify a potential roaming partner's plans to implement priority access for public safety users.

XI. CONCLUSION

For the foregoing reasons, Alcatel-Lucent urges the Commission to create interoperability requirements that are consistent with the arguments presented herein.

Respectfully submitted,

ALCATEL-LUCENT

By: _____

Michael T. McMenamin
Senior Counsel-Director
1100 New York, Avenue, N.W.
Suite 640 West Tower
Washington, D.C. 20005

July 19, 2010

APENDIX A

M.I.S.

To Support LTE Single Mode

Copyright© 2010 Alcatel-Lucent, All Rights Reserved

U**NCONTROLLED COPY:** The master of this document is stored on an electronic database and is "write protected"; it may be altered only by authorized persons. While copies may be printed, it is not recommended. Viewing of the master electronically ensures access to the current issue. Any hardcopies taken must be regarded as uncontrolled copies.

ALCATEL-LUCENT CONFIDENTIAL: The information contained in this document is the property of Alcatel-Lucent. Except as expressly authorized in writing by Alcatel-Lucent, the holder shall keep all information contained herein confidential, shall disclose the information only to its employees with a need to know, and shall protect the information from disclosure and dissemination to third parties. Except as expressly authorized in writing by Alcatel-Lucent, the holder is granted no rights to use the information contained herein. If you have received this document in error, please notify the sender and destroy it immediately.

Version: <*LE2.0 v1.0*>
Issue Date: <*July. 12, 2010*>

1. INTRODUCTION.....19

1.1 DOCUMENTATION PLANS 19
1.2 DOCUMENT SCOPE 19
1.3 LTE REFERENCE ARCHITECTURE 20
1.4 SUPPORTED STANDARDS 20
1.5 STANDARDS OPEN ISSUES 22
1.6 OTHER REFERENCES 22
1.7 GLOSSARY/ACRONYMS 22
2. HISTORY OF CHANGES 24
3. UE INTERFACE TO THE ENB (LAYER 1, LAYER 2 AND LAYER 3) 25
3.1 GENERAL UE REQUIREMENTS 25
3.2 LAYER 1 AND LAYER 2 25
3.3 RRC LAYER 27
4. UE INTERFACE TO THE MME – NAS 32
5. UE AUTHENTICATION TO HSS 38
6. UE INTERFACE TO THE PGW 39
6.1 UE TO PGW BEARER PLANE 39
6.2 IP ADDRESSING AND ALLOCATION 39
7. RADIO SUPPORT 40
7.1 BAND SUPPORT 40
7.2 MIMO SUPPORT 41

1. INTRODUCTION

This ALCATEL-LUCENT TECHNOLOGIES (a.k.a. ALU) document (ALU control number d54000) specifies the Mobile Station User Equipment (UE) Interface Summary (MIS) to support LTE Single Mode Network. Such interface includes communications between UE and eNB; UE and MME; UE and PDNGW. This MIS document is to support the customer professional service by addressing the mobile requirements to interface with ALU LTE network solutions

1.1 DOCUMENTATION PLANS

ALU global MIS (Mobile Interface Specifications) documentation includes all interfaces documents involving LTE single mode, LTE and eHRPD interworking, LTE and 1xRTT interworking and eHRPD single mode UE interface specifications. The details documents are listed in Figure 1.1.

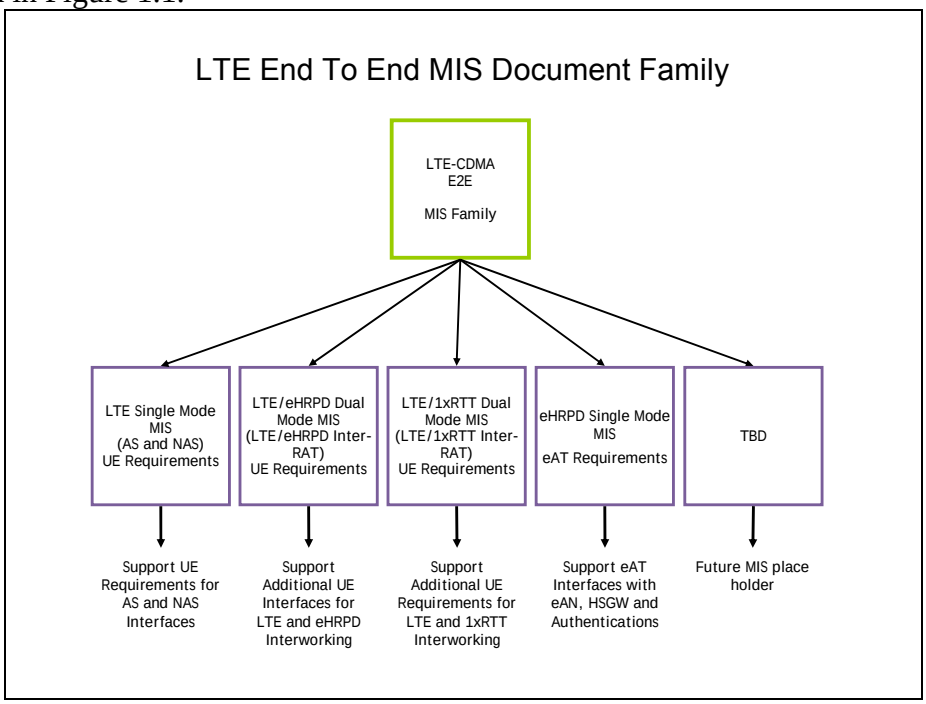

Figure 1.1: MIS Documentation Family

1.2 DOCUMENT SCOPE

The scope of this MIS focuses on the UE requirements in order to support ALU LTE networking systems. Details UE and network interfaces specified in this document include AS (Access-Stratum Protocol between UE and eNB), NAS (Non-Access-Stratum Protocol between UE and MME) and UE to PGW bear setup requirements. The first initial of this MIS is aligned with ALU LE2.0 product and, due to time to market consideration, will only concentrate on standard compliance for Change Requests without repeating any detailed standard specifications.

1.3 LTE Reference Architecture

Figure 1.3 shows the reference architecture for support of the LTE network elements. In this figure, the UE is connected to the eNB via the Uu interface. Also, the UE communicates with the MME through NAS interface that is transparent to the eNB.

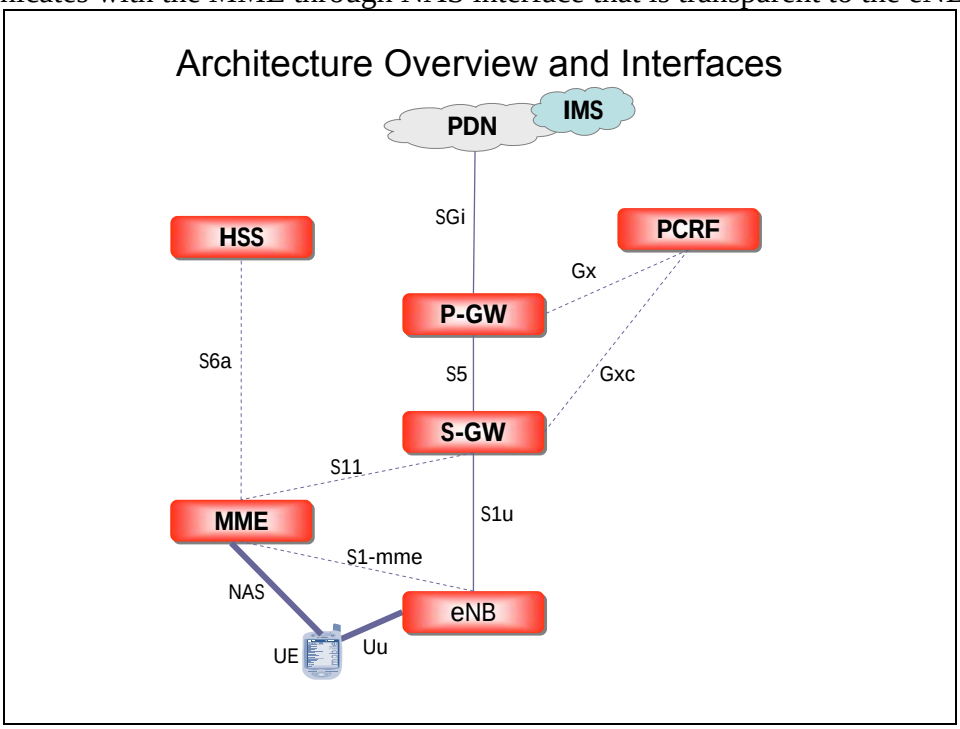

Figure 1.3 LTE Architecture Overview (Non-Roaming)

1.4 Supported Standards

ALU LE2.0 LTE E-UTRAN and EPS products require that the UE shall be, at least, compliant with 3GPP September 2009 and shall support a certain numbers of December 2009 CRs as specified in this MIS document.

The 3GPP standard documents that this MIS may use as reference are the following:

Document Number	Description
3GPP TS 23.060	General Packet Radio Service (GPRS); Service description; Stage 2.
3GPP TS 23.122	Non-Access-Stratum (NAS) functions related to Mobile Station in idle mode.
3GPP TS 23.203	Policy and charging control architecture.
3GPP TS 23.216	Single Radio Voice Call Continuity (SRVCC); Stage 2
3GPP TS 23.246	Multimedia Broadcast/Multicast Service (MBMS); Architecture and functional description.
3GPP TS 23.251	Network Sharing; Architecture and functional description.
3GPP TS 23.272	Circuit Switched (CS) fallback in Evolved Packet System (EPS); Stage 2
3GPP TS 23.402	Architecture enhancements for non-3GPP accesses.
3GPP TS 24.008:	Mobile Radio Interface Layer 3 specification; Core Network Protocols; Stage 3.

3GPP TS 24.301:	Non-Access-Stratum (NAS) protocol for Evolved Packet System (EPS); Stage 3.
3GPP TS 25.304	UE procedures in idle mode and procedures for cell re-selection in connected mode.
3GPP TS 25.331:	Radio Resource Control (RRC); Protocol Specification.
3GPP TS 25.401	UTRAN overall description.
3GPP TS 25.413	UTRAN Iu interface Radio Access Network Application Part (RANAP) signaling.
3GPP TS 29.060	GPRS Tunneling Protocol (GTP) across the Gn and Gp interface.
3GPP TS 29.061:	Interworking between the Public Land Mobile Network (PLMN) supporting packet based services and Packet Data Networks (PDN).
3GPP TS 29.272	Evolved Packet System (EPS); Mobility Management Entity (MME) and Serving GPRS Support Node (SGSN) related interfaces based on Diameter protocol
3GPP TS 29.274:	General Packet Radio Service (GPRS); Evolved GPRS Tunnelling Protocol (eGTP) for EPS.
3GPP TR 29.803	3GPP System Architecture Evolution (SAE): CT WG4 aspects
3GPP TS 33.401:	3GPP System Architecture Evolution: Security Architecture.
3GPP TS 36.300	Evolved Universal Terrestrial Radio Access (E-UTRA) and Evolved Universal Terrestrial Radio Access (E-UTRAN); Overall description; Stage 2.
3GPP TS 36.304:	Evolved Universal Terrestrial Radio Access (E-UTRA); User Equipment (UE) procedures in idle mode.
3GPP TS 36.321:	Evolved Universal Terrestrial Radio Access (E-UTRA); Medium Access Control (MAC) Protocol Specification.
3GPP TS 36.331:	Evolved Universal Terrestrial Radio Access (E-UTRA); Radio Resource Control (RRC); Protocol specification.
3GPP TS 36.413:	Evolved Universal Terrestrial Access Network (E-UTRAN); S1 Application Protocol (S1AP).
3GPP TS 43.022	Functions related to MS in idle mode and group receive mode.
3GPP TS 43.051	GERAN Overall description - Stage 2.
3GPP TS 43.129	Packet-switched handover for GERAN A/Gb mode; Stage 2.
3GPP TS 44.064	Mobile Station - Serving GPRS Support Node (MS-SGSN); Logical Link Control (LLC) Layer Specification.
3GPP TS 48.018:	General Packet Radio Service (GPRS); Base Station System (BSS) - Serving GPRS Support Node (SGSN); BSS GPRS Protocol (BSSGP).
IETF RFC 1034 (1987)	Domain names – concepts and facilities (STD 13).
IETF RFC 2131	Dynamic Host Configuration Protocol.
IETF RFC 3633	IPv6 Prefix Options for Dynamic Host Configuration Protocol (DHCP) version 6.
IETF RFC 3736	Stateless Dynamic Host Configuration Protocol (DHCP) Service for IPv6.
IETF RFC 4039	Rapid Commit Option for the Dynamic Host Configuration Protocol version 4 (DHCPv4).

IETF RFC 4861:	Neighbor Discovery for IP Version 6 (IPv6).
IETF RFC 4862	IPv6 Stateless Address Auto configuration.

1.5 STANDARDS OPEN ISSUES

None

1.6 OTHER REFERENCES

[1] ALU 3GPP RAN5 List for LA2.0, Oct. 27, 2009

1.7 GLOSSARY/ACRONYMS

3GPP	Third Generation Partnership
2G	Second Generation Wireless – GSM/GPRS
3G	Third Generation Wireless – UMTS/HSPA
4G	Fourth Generation
AAA	Authentication Authorization and Accounting
AKA	Authentication and Key Agreement
AN	Access Network
ARP	Allocation and Retention Priority
AS	Application Server
AT	Access Terminal
ATCA	Advanced Telecommunications Computing Architecture
BS	Base Station
BTS	Base Transceiver Station
CS	Circuit Switched
DL	DownLink
DPI	Deep Packet Inspection
eNodeB	Evolved NodeB
EPC	Evolved Packet Core
E-UTRAN	Evolved – Universal Terrestrial Radio Access Network
FBC	Flow Based Charging
GBR	Guaranteed Bit Rate
GGSN	Gateway GPRS Support Node
GPRS	General Packet Radio Service
GRE	Generic Routing Encapsulation
GSM	Global System for Mobile Communication
GTP	GPRS Tunneling Protocol
H-PCRF	Home PCRF
H-PLMN	Home PLMN
HSPA	High Speed Packet Access
HSS	Home Subscriber Server
HW	HardWare
IETF	Internet Engineering Task Force
IM	Instant Messaging
IMS	IP Multimedia Subsystems
IP	Internet Protocol

IPsec	Internet Protocol Security
LTE	Long Term Evolution
Mbps	Megabits per second
MIP	Mobile Internet Protocol
MIS	Mobility Interface Specifications
MME	Mobility Management Entity
NAI	Network Access Identifier
NAS	Non-access Stratum
OFDM	Orthogonal Frequency Division Multiplexing
PCRF	Policy and Charging Rules Function
PDN	Packet Data Network
PDN GW	Packet Data Network Gateway (H=Home or V=Visited)
PLMN	Public Land Mobile Network
PPP	Point to Point Protocol
PS	Packet Switched
QCI	QoS Class Identifier
QoS	Quality of Service
QRM	Quality Reference Model
RAN	Radio Access Network
RAT	Radio Access Technology
RNC	Radio Network Controller
ROHC	RObust Header Compression
RRC	Radio Resource Control (3GPP)
RTT	Real Time Tool
SAE	System Architecture Evolution
SDF	Service Data Flow
SGSN	Serving GPRS Support Node
SGW	Serving Gateway
SIP	Session Initiation Protocol
SW	SoftWare
TAS	Telephony Application Server
TEID	Tunnel Endpoint Identifier
TFT	Traffic Flow Template
TICLI	Technician Interface Command Line Interface
UE	User Element (a.k.a. – mobile handset or access terminal)
UL	UpLink
UMTS	Universal Mobile Telecommunications System
VCC	Voice Call Continuity
VoIP	Voice over IP
WCDMA	Wideband Code Division Multiple Access
WiMAX	Worldwide Interoperability for Microwave Access
XMS	Extended Management System

2. HISTORY OF CHANGES

The change history for this document is presented in the following table.

Issue	Date	Description of Change	Approval Manager	Quality Record/Approval
v0.1	12/15/2009	Internal Baselined Version	John MacNamara	E-Form #365129
V1.0	07/12/2010	FCC Public Safety	John MacNamara	E-Form #365129

3. UE Interface to the eNB (Layer 1, Layer 2 and Layer 3)

3.1 General UE Requirements

The initial version MIS is aligned with ALU LE2.0 network systems, which adds additional LTE functions and enhancement to ALU existing pre-LE2.0 network products. [Note: Category indicates whether the requirement is mandate (M) or high desired (HD)] ALU LE2.0 requires the UE to support 3GPP September 2009 or later version with some additional December 2009 technical correctional CRs. The sub-sections below have specified those required December 2009 CRs that UE must support. In addition, the following sub-sections also include some example June and September 2009 CRs that are critical for product IOT and ALU expects the UE to follow:

Req. #	Requirement	Category	Remarks	References
3.1.1.1	The UE shall support and be compliant with 3GPP September 2009 or later version for MAC, RLC, PDCP, and RRC protocol layers.	M	For those UEs that are compliant with 3GPP December 2009 version, the December CRs should be automatically included.	ALU LE2.0
3.1.1.2	The UE shall support and be compliant with the additional December 2009 Change Requests as specified in the following subsections of section 2 and section 3.	M		ALU LE2.0

3.2 Layer 1 and Layer 2

Req. #	Requirement	Category	Remarks	References
3.2.1.1	The UE shall support CR#94 (R1-094119, RP-091168) CR to Correction to Channel inter-leaver for PUSCH RE Mapping.	M	If the UE does not support the correct scheme, when multiplexing Rank informattion with UL-SCH in a subframe, it could result in incorrect channel interleaving and incorrect PUSCH data transmsision.	3GPP TS 36.212 December CR ALU LA1.0

Req. #	Requirement	Category	Remarks	References
3.2.1.2	The UE shall support CR#87 (R1-092036, RP-090528) CR to clarify some parameters for determining control resources on PUSCH	M	Without this CR being supported, there will be incomplete and potentially ambiguous specification as for RAR; the reference is not explicitly defined.	3GPP TS 36.212 June CR ALU LA1.0
3.2.1.3	The UE shall support CR#242 (R1-092266, RP-090529) Clarify latest and initial PDCCH for PDSCH and PUSCH transmissions, and NDI for SPS activation	M	There are incomplete specification and potential confusion for SPS and RAR regarding the reference for M_sc^{PUSCH-initial}, C, K_r, N_symb^PUSCH-initial, implicit TBS for DL and UL, and modulation order for UL. Potential misinterpretation of the handling of NDI field for SPS activation.	3GPP TS 36.213 June CR ALU LA2.0
3.2.1.4	The UE shall support CR#376 (R2-093439, RP-090513) to allow the MAC PDUs with zero or more padding bytes at the end of the PDU.	M	The risk without this CR is that the receiving side (either eNB or UE) may reject PDUs with zero or one padding byte at the end of the PDU, leading to data loss.	3GPP TS 36.321 June CR ALU LA1.x
3.2.1.5	The UE shall support CR#377 (R2-093542, RP-090513) to include the correction to duplicate reception of TA command (2nd method).	M	The risk without this CR is that the UE may loose time synchronization in uplink after the duplication of a TA command due to ACK→NAK error.	3GPP TS 36.321 June CR No ALU Impacts
3.2.1.6	The UE shall support CR#344 (R2-093431, RP-090513) PHR timer handling after handover	M	Correction for PHR. PERIODIC PHR TIMER is started upon receiving the first uplink grant after MAC reset.	3GPP TS 36.321 June CR ALU LA2.0
3.2.1.7	The UE shall support CR#379 (R2-094167, RP-090906) to include the correction to NDI semantics.	M	The risk without this CR is that the NDI de-synchronization between UE and eNB can occur resulting in data loss, significant additional latency and inefficient resource utilization.	3GPP TS 36.321 September CR ALU LA1.x

Req. #	Requirement	Category	Remarks	References
3.2.1.8	The UE shall support CR#80 (R2-092783, RP-090514) Reset of T_poll_retransmission	M	The UE may trigger STATUS reports frequently.	3GPP TS 36.322 June CR ALU LA2.0
3.2.1.9	The UE shall support CR# 081 (R2-092784, RP-090514) RLC Functions	M	The eNB can not request retransmission of AMD PDU segments. The eNB can only request retransmission of AMD PDUs.	3GPP TS 36.322 June CR ALU LA2.0
3.2.1.10	The UE shall support CR# 083 Correction to condition for stopping t-Recordering in AM mode (R2-093443, RP-090514)	M	Unintended resetting and restarting of t-Reordering in certain subcases of when the transmission window is stalled at the peer entity, delaying the timer expiry and the highly urgent status reporting to the peer entity.	3GPP TS 36.322 June CR ALU LA2.0

3.3 RRC LAYER

Req. #	Requirement	Category	Remarks	References
3.3.1.1	The UE shall support CR#255 Alignment of SRS-Bandwidth with TS 36.211 (R2-096430, RP-091314).	M	The field description of SRS-Bandwidth is updated to refer to BSRS. This is only a correction of the reference field and should be aligned with most implementations.	3GPP TS 36.331 December 2009 CR ALU LA2.0
3.3.1.2	The UE shall support CR #159 (RP-090516, R2-092788) for the octet alignment of VarShortMAC-Input.	M	If UE and eNB use a different method for calculation then RRC Connection Re-establishment procedure will consistently fail and a NAS procedure will be required to restore the connection after a radio link failure. Call drop.	3GPP TS 36.331 June CR ALU LA2.0

Req. #	Requirement	Category	Remarks	References
3.3.1.3	The UE shall support CR#160r3 (RP-090516, R2-093601) that includes the minor corrections to the feature grouping.	M	Without this CR, there will be incorrect coupling of inter-frequency handover and CDMA2000 measurement support, requiring all E-UTRA UEs capable of inter-frequency hand-over to support also CDMA2000. Without this CR, ANR measurements + DRX setup for ANR measurement fails.	3GPP TS 36.331 June CR ALU LA2.0
3.3.1.4	The UE shall support CR#161 (R2-092790, RP-090516) for Security clarification.	M	Without this CR being done, the UE may not understand how to derive the key when it receives keyChangeIndicator and in case KeNB is wrongly derived; re-keying procedure doesn't work as intended and AS security will be failed after re-keying. Security failure, call drop	3GPP TS 36.331 June CR ALU LA2.0
3.3.1.5	The UE shall support CR#163r1 (R2-093543, RP-090516) to correct the UE measurement model.	M	Without supporting this CR, the UE may implement Layer 3 filtering differently, leading to different UE event and measurement reporting performance. This causes potential HO performance degradation due to measurements performance degradation.	3GPP TS 36 331 June CR No ALU Impacts

Req. #	Requirement	Category	Remarks	References
3.3.1.6	The UE shall support CR#164 Restricting the reconfiguration of UM RLC SN field size (R2-092793, RP-090516)	M	UE implementation is required to prepare for UM RLC SN length reconfiguration on the fly, but no details are specified how the UE should perform such a reconfiguration. If the network triggered a UM RLC SN field size change at an arbitrary time then it would likely result in at least temporary corruption of data carried by the affected DRB (leading to garbled voice in the case of a voice call)	3GPP TS 36.331 June CR ALU LA2.0
3.3.1.7	The UE shall support CR#166 Handling of expired TAT and failed D-SR (R2-092795)	M	It is not clear whether the network will expect and ACK/NACK after TAT resumption, and if so, on which resource.	3GPP TS 36.331 June CR No ALU Impacts
3.3.1.8	The UE shall support CR#168r2 Miscellaneous small corrections (R2-093556, RP-090516)	M	Incorrect and inconsistent specification (CR is not affecting any functionality for actual implementations)	3GPP TS 36.331 June CR ALU LA2.0
3.3.1.9	The UE shall support CR#180, Handling of Measurement context During HO Preparation (R2-093550, RP-090516)	M	Ambigous specification regarding which node should execute the Peer Operation, when the vendors of source eNB and target eNB have different understanding, then the measurement context between target eNB and UE will be out of sync.	3GPP TS 36.331 June CR ALU LA2.0
3.3.1.10	The UE shall support CR#186r1 Clarification regarding mobility from EUTRA in-between SMC and SRB2/DRB setup (R2-093525, RP-090516)	M	The UE would not have to support inter-RAT mobility in-between security activation and establishment of SRB2+ DRB	3GPP TS 36.331 June CR ALU LA2.0

Req. #	Requirement	Category	Remarks	References
3.3.1.11	The UE shall support CR#195r2 (R2-093537, RP-090516) to clarify the RB combination in feature group indicator.	M	There might result a mismatch on the RB combinations for which the network assume the UE supports and for which the UE actually supports. Without this CR, it may have impact on 4 bearers setup, or bearer combination including VoIP (RLC-UM).	3GPP TS 36.331 ALU LA2.0
3.3.1.12	The UE shall support CR#197 (RP-090497) for the alignment of pusch-HoppingOffset with TS 36.211.	M	This CR clarifies the potential incorrect implementation due to lack of clarity regarding the parameter to which pusch-hoppingOffset maps that can lead to failure of the pusch hopping functionality. This causes the potential issue with VoIP UL L1 configuration (use of pusch hopping)	3GPP TS 36.331 June CR ALU LA1.0
3.3.1.13	The UE shall support CR#198 (RP-090570) that explicits srb-Identity values for SRB1 and SRB2	M	Without supporting this CR, the UE could have a risk to apply the srb-Identity, rlc-Config and logicalChannelConfig of SRB1 for SRB2, and vice versa, after handover to E-UTRA. This may cause call setup failure.	3GPP TS 36.331 June CR ALU LA1.0
3.3.1.14	The UE shall support CR#199 (R2-093621) Removing use of defaultValue for mac-MainConfig	M	Any eNB that has designed the defaultValue should support this CR; otherwise, there could be misunderstand between the UE and the eNB.	3GPP TS 36.331 June CR No ALU Impacts

Req. #	Requirement	Category	Remarks	References
3.3.1.15	The UE shall support CR#203 (R2-094174, RP-090906) for the indication of DRB Release during HO	M	Without supporting this CR, if target eNB informs UE to release some DRB(s) during handover, and after handover failure, even UE recovers these DRB(s) by RRC connection re-establishment, these DRB(s) still can't be used for data transmission as corresponding EPS bearer is deactivated by upper layers.	3GPP TS 36.331 September CR No ALU Impacts
3.3.1.16	The UE shall support CR#204R1 (R2-095210, RP-090906) for the correction regarding application of dedicated resource configuration upon handover.	M	If the eNB and UE are implemented differently, the UE may apply the CQI/SRS/SR configuration interfering with SR/ SRS/ CQI transmissions from other UEs.	3GPP TS 36.331 September CR ALU LA2.0

4. UE Interface to the MME – NAS

The initial version MIS is aligned with ALU LE2.0 network systems, which adds additional LTE functions on top of ALU existing pre-LE2.0 network products. [Note: Category indicates whether the requirement is mandate (M) or high desired (HD)]
ALU LE2.0 requires the UE to support 3GPP September 2009 or later version with some additional December 2009 technical correctional CRs. The sub-sections below has specified those required December 2009 CRs that UE must support. The following sub-sections also include some June and September 2009 CRs that are critical for product IOT and ALU expects the UE to follow:

Req. #	Requirement	Category	Remarks	References
4.1.1.1	The UE shall support and be compliant with 3GPP September 2009 version for NAS protocol.	M	ALU LE2.0 expects the UE to comply with 3GPP September 2009 version plus some December CRs.	3GPP TS 24.301 3GPP TS 33.401 ALU LM2.0
4.1.1.2	The UE shall support CR-504r1 (CP-090899,C1-094488) Mapped QCI Handling in UE.	M	Network may reject subsequent UE-initiated Bearer Resource Modification procedures on detecting a change in QCI for the given bearer.	3GPP TS 24.301
4.1.1.3	The UE shall support CR-539r2 (CP-090899, C1-094753) From MBR of default PDP context to APN-AMBR of default EPS bearer.	M	This CR is very similar to C1-094049 and is essential, Wrong interpretations of and erroneous current specification text leading to wrong implementations and misbehaving UEs and MMEs.	3GPP TS 24.301

Req. #	Requirement	Category	Remarks	References
4.1.1.4	The UE shall support CR-570r3 (CP-090899,C1-095360) Default value for T3 412.	M	This CR is necessary to correctly set the UEs timer T3412 and the cases when it should use the default . the idea of a default timer value currently does not exist. The UE behavior is unpredictable if the network does not provide a value for T3412 while the UE does not have a stored value. This unpredictable behavior could lead to the network implicitly detaching the UE for EPS services (and non-EPS services as a consequence for a CS fallback UE) after some time.	3GPP TS 24.301
4.1.1.5	The UE shall support CR-575r5 (CP-090900, C1-095539) NAS in TS 24.301 (equivalent to CR-347 in TS 33.401)count handling in idle mode inter-RAT mobility	M	Without this CR supported, the NAS counts could become out of sync and lead to security errors, denial of service, or re-use of keys presenting a security threat.	3GPP TS 24.301 3GPP TS 33.401
4.1.1.6	The UE shall support CR-577r2 (CP-090900, C1-094763) in TS 24.301 NAS count handling on inter-RAT mobility.	M	Without this CR supported, it is possibility that an MME or UE could re-use a key which should be prevented by security design. Could result in denial of service. The MME should treat an S1AP Handover Command instructing a UE to handover from EUTRAN to UTRAN, GERAN, or SRVCC like a NAS downlink message and increment NAS COUNT accordingly.	3GPP TS 24.301

Req. #	Requirement	Category	Remarks	References
4.1.1.7	The UE shall support CR-603r1 (CP-090899, C1-095346), Handling of missing NAS Secuirt Mode Complete when generating mapped context.	M	MME and UE may not agree on mapped security context causing loss of connection. - Misalignment between Stage 2 and 3.	3GPP TS 24.301 3GPP TS 33.401
4.1.1.8	The UE shall support CR-632r2 (C1-095564, CP-090898) in TS 24.301 (equivalent to SP-090811, CR-339 in TS 33.401) Correction to the NAS security mode control procedure (Rel-8).	M	Incorrect security requirements remain in stage 3, which leads to different interpretation, and therefore implementation by both UE and MME implementations. Handling of the NAS COUNT would be incorrect and the 3GPP system fails to provide any service to the end-user. The changes in Section 4.4.3.1 applies to handover from UTRAN/GERAN to E-UTRAN (LM2.0). The other changes are common for all E-UTRAN customers (Deferred).	3GPP TS 24.301 3GPP TS 33.401
4.1.1.9	The UE shall support CR-636 r2(C1-095564) in TS 24.301 Alignment with TS23.401 caused by changing the term CSFB to "CSFB and SMS over SGs".	M	Add definition of SMS over SGs capable UE . Include SMS over SGs capability. Without supporting the clarification from CR, The MT SMSs may not be delivered correctly. No impacts on ALU MME LM2.0.	3GPP TS 24.301
4.1.1.10	The UE shall support CR-0318 (CI-092141, CP-090412) for the clarification of EPS QoS length.	M	Without supporting this CR, the IE could be wrongly encoded or decoded.	3GPP TS 24.301 ALU LM2.0/LE2.0
4.1.1.11	The UE shall support CR-0231 (CP-90410, CI-091490) to clarify the EPS Mobile Identity octet numbering.	M	This CR corrects the misalignment in the TS which could lead to misinterpretation and wrong implementations	3GPP TS 24.301 ALU LM2.0/LE2.0

Req. #	Requirement	Category	Remarks	References
4.1.1.12	The UE Shall support CR-0217r1 (CP-090410, CI-092145) that specifies the clarification on protocol discriminator for security protected NAS message.	M	This CR has clarified the protocol discriminator of a security protected NAS message that is defined as PD_EMM. Without this CR, some implementation may just not set the PD to PD_EMM because it is not clearly stated in the existing standard and rationally the PD could not be anything else than that of EMM.	3GPP TS 24.301 ALU LM2.0/LE2.0
4.1.1.13	The UE shall support CR-0251r5 (CP-090498), eKSI definition in NAS messages.	M	This CR clarifies the eKSI definition in NAS message because the current NAS message format does not work as designed in stage 2.	3GPP TS 24.301 ALU LM2.0/LE2.0
4.1.1.14	The UE shall support CR-0303 (CP-090412, CI-091809) that adds the correction on Handling of UE network Capability.	M	In case of pre-Rel-8 SGSN to MME change, the MME will not receive the UE network capability from the UE. Without this CR, interoperability issue can arise when DRX is used.	3GPP TS 24.301
4.1.1.15	The UE shall support CI-091567 Remove unused ESM cause value #40 – “Feature not supported”	M	This CR does not apply to ALU; however, ALU thinks this CR is critical for those vendors who have impacts.	3GPP TS 33.401 June CR No ALU Impacts
4.1.1.16	The UE shall support CP-091981, TAU Handling	M	This CR #210 deletes the "NAS key set identifierASME" in the TAU ACCEPT.	3GPP TS 33.401 June CR No ALU Impacts

Req. #	Requirement	Category	Remarks	References
4.1.1.17	The UE shall support CP-092259 Removal of KSI asme from TAU accept.	M	ALU thinks that this CR is editorial corrections resulting from C1-091981. This CR is a generic CR though implicitly it is saying that the value could be KSIsgsn or KSIasme. Since it talks about population the value of the KSI regardless whether it is KSIsgsn or KSIasme. However, this CR should be critical for those who have impacts. This CR may not have UE impacts.	3GPP TS 33.401 June CR ALU LM2.0/LE2.0
4.1.1.18	The UE shall support CR-259 (S3-091228) that adds the correction of rules on concurrent runs of security procedures.	M	This CR corrects the rules on concurrent runs of security procedures. Without this CR being implemented, there could be wrong implementation and interoperability on the type of RRCConnectionReconfiguration procedure.	3GPP TS 33.401 September CR ALU LM2.0/LE2.0 NAS Security
4.1.1.19	The UE shall support CR-282r1 (S3-091457, Rel-8) in order to complete the EPS AKA description.	M	This CR is to complete and to clarify the details of re-synchronization and network checking the UE authentication for EPS AKA since some of them are missing and some texts are out of order or repeated. Without this CR being implemented, the missing details may lead to network not checking the UE is authenticated - stage 2 and 3 mis-aligned	3GPP TS 33.401 September CR ALU LM2.0/LE2.0 NAS Security

Req. #	Requirement	Category	Remarks	References
4.1.1.20	The UE shall support CR-286r1 (S3-091451, Rel-8) that corrects the details of NAS COUNT.	M	This CR corrects the details of the handling of the NAS COUNTs that is currently only covered in handover clauses, whereas it needs to apply for all cases. The NAS COUNTS are specific to a K_ASME and shall only be set when the K_ASME is created and never reset. Without this CR being implemented, UE or MME may not handle the NAS COUNTs properly, which leads to key stream re-use.	3GPP TS 33.401 September CR ALU LM2.0/LE2.0 NAS Security
4.1.1.21	The UE shall support CR-290r1 (S3-091478, Rel-8) to clarify the inter-RAT TAU Request behavior.	M	This CR clarifies the inter-RAT TAU Request behavior; otherwise, the MME may unnecessarily reject messages from a well behaving UE. The current text is not clear for implementers to follow; therefore, it is necessary for UE and network elements to clarify their implement according to this CR.	3GPP TS 33.401 September CR ALU LM2.0/LE2.0 NAS Security

5. UE Authentication to HSS

The UE should support the following authentication CR in order to be authorized to utilize the LTE network.

Req. #	Requirement	Category	Remarks	References
5.1.1.1	The UE shall support C1-094465 (CR-1411) Correction for Seperation bit of AMF.	M	If this is not corrected, there is misalignmrnt with SA3(stage 2) specification and the implementation with using different bit is not work for interoperability test.	December 2009 CR of 3GPP TS 24.008.

6. UE Interface to the PGW

PGW is the IP access gateway, which provides the user with an IP address. In addition, PGW also provides the per-user based packet filtering including TFT operations with the UE.

6.1 UE TO PGW BEARER PLANE

Req. #	Requirement	Category	Remarks	References
6.1.1.1	The UE shall support up to 4 bearers in LE2.0.	M		
6.1.1.2	The UE shall support CP-090630 (CR-329) Corrections in TFT checks.	M	Rejection of network EPS bearer context modification request, UE bearer resource allocation/modification request and network dedicated EPS bearer context activation procedures would always occur depending on the TFT and packet filters contents.	3GPP TS 24.301 September CR No ALU Impacts
6.1.1.3	The UE shall support multiple PDN connections.	M	The UE shall support up to 3 PDN connection at the same time.	

6.2 IP ADDRESSING AND ALLOCATION

Req. #	Requirement	Category	Remarks	References
6.2.1.1	The UE shall support 2 simultaneous IP addresses.	M	UE IPv4/IPv6 capable. Some example is the dual stack UE that uses IPv6 to access IMS and uses IPv4 to access web services outside the service provider's network.	

7. Radio Support

In order to operate with ALU LTE network systems, the UE shall support the following radio features for Band Class, Frequency and Multiple Input and Multiple Output perspective.

7.1 BAND SUPPORT

Req. #	Requirement	Category	Remarks	References
7.1.1.1	The UE shall support AWS band (3GPP band 4).	M	Any carrier center frequency allowed by standard.	3GPP TS 36.101
7.1.1.2	The UE shall support lower 700 MHz band 12 and/or 17.	M	Any carrier center frequency allowed by standard.	3GPP TS 36.101
7.1.1.3	The UE shall support upper C block 700 MHz band 13.	M	Any carrier center frequency allowed by standard.	3GPP TS 36.101
7.1.1.4	The UE shall support both AWS and UHF (700 MHz) band simultaneously.	M		3GPP TS 36.101
7.1.1.5	The UE shall support the following Channel Bandwidth: • 1.4, 3, 5, 10, 15, 20 MHz Channel Bandwidth for Band 4. • 1.4, 3, 5, 10 MHz Channel Bandwidth for Band 12. • 5, 10 MHz Channel Bandwidth for Band 13 and 17.	M	Table 5.6.1-1 E-UTRAN Channel Bandwidth. This also enables the support of 20MHz LTE bandwidth in 2.6GHz band using all 3GPP standard compliant PHY, MAC and upper layers.	3GPP TS 36.101

The UE should support the following band and frequency:

- Band 4: AWS Band, and
- Band 12: Lower A + B +C of/around 700 MHz and
- Band 17: Lower B + C Blocks of 700 MHz
- Band 13 Upper C block of 700 MHz

7.2 MIMO SUPPORT

Req. #	Requirement	Category	Remarks	References
7.2.1.1	The UE shall support 2x2 MIMO.	M		