vendor communities, with objective of identifying and deploying the appropriate solutions to meet Interoperability requirements.

A.8 Devices

Delivery of user devices for Public Safety broadband agencies will be driven by the availability of an LTE chipset that supports standard 3GPP baseband protocols and RF operation in the 10 MHz of Public Safety spectrum (763 MHz to 768 MHz lower and 793MHz to 798 MHz upper). All devices will adhere to the 3GPP Release 8 air interface specification and the recommended out of band emissions (OOBE) as specified in the waiver order, as well as existing OOBE requirements to protect Public Safety narrowband voice services in the 700MHz spectrum. The following are the user devices intended for early deployment Public Safety LTE networks:

USB-Dongle

Initial trial and early deployment networks will be supported by a USB-dongle device suitable for external connection to a host personal computer. A broad range of Public Safety legacy IP data applications including Internet, Mobile VPN, CAD, mobile office, text massaging, location, lookups, and records will be supported as well as uplink and downlink streaming video. The form factor of this device will follow commercial industry norms and be conducive to nomadic PC use both in and out of the vehicle.

The USB-dongle will support the 3GPP Release 8 standard interface to the LTE RAN, and operate as a 3GPP Power Class 3 device. The USB-dongle will be able to roam to other regional Public Safety LTE. Due to the physical size of the USB-dongle devices, the benefits due to 2X2 MIMO downlink will be limited

Vehicle Modem

The vehicle modem is an essential component for vehicle-based first responders and law enforcement officers in either urban/suburban or rural environments. It will support the 3GPP Release 8 standard interface to the LTE RAN, nominally as a 3GPP Power Class 3 device, and potentially at higher power levels, depending on final FCC rules relating to interference protection, and ERIC's endorsement. The vehicle modem, equipped with a set of external high gain omni-directional MIMO antennas, offers improved link budget and throughput performance compared to embedded PC or dongle solutions and is key to extending per site coverage range, particularly in rural environments. The vehicle modem will be able to roam to other regional Public Safety LTE networks.

The vehicle modem will be suitably rugged for cab or trunk vehicle mounting and support Ethernet-based wired computers and peripherals, as well as internal GPS capability. A broad range of Public Safety legacy IP data applications including Internet, Mobile VPN, CAD, mobile office, text messaging, location, lookups, and records will be supported as well as uplink and downlink streaming video from the vehicle.

The vehicle modem is intended to be managed remotely and upgradable over the air via standard means such as OMA-DM.

Smartphone

A handheld device that operates on the PSST spectrum and serves as both a data and phone device is important to early Public Safety LTE deployments, particularly in urban/suburban environments where on-street or in-building portable coverage is provided. It will support the 3GPP Release 8 standard interface to the LTE RAN as a 3GPP Power Class 3 device, with internal MIMO antennas. The smartphone will be able to roam to other regional Public Safety

LTE networks. The smartphone will have the capability of also roaming to a commercial network for data and telephony services as a backup to Public Safety LTE services.

A broad range of Public Safety legacy IP data applications including Internet, Mobile VPN, CAD, mobile office, text messaging, location, lookups, and records will be supported as well as uplink and downlink streaming video. The smartphone will be able to support VoIP services such as commercial PTT and telephony on the PS LTE network, as well as legacy circuit switched telephony. The device will be of a form factor suitable for belt or pocket, with user ergonomics as driven by the commercial market, but suitable for Public Safety use in a range of indoor and outdoor environments. Standard commercial capabilities such as a high resolution camera, GPS, Bluetooth, and WLAN will be supported.

The smartphone is intended to be managed remotely and upgradable over the air via standard means such as OMA-DM.

B. Applications

The FCC has identified in their 10-79 order a list of minimum waiver applications potential waiver grantees must support. These applications provide the foundation for meaningful nationwide interoperability. This section will demonstrate how the waiver system will support these applications.

B.1 Internet Access

Today, responders typically utilize their vehicle-docked Mobile Data Terminal (i.e. ruggedized laptop) to access the Internet over a secure VPN to their home agency Intranet. The responder's vehicle typically contains a 3G commercial cellular modem. In this usage model, a public safety responder "looks" like a mobile enterprise employee. An IT administrator from the agency facilitates the (M)VPN solution used in the vehicle and provides an agency Intranet. Like corporations, the agency Intranet contains valuable data and resources necessary for responders to do their job (as does the greater Internet). Also, the IT administrator:

- establishes policies as to which Internet sites may and may not be accessed
- logs responder activities on the Internet
- provides virus/firewall protection

As a technology, LTE provides 2 methods to access the Internet: (1) by the responder's home system (i.e. home routed traffic) and (2) by the roamed-to (visited) system (i.e. local breakout). The UE selects an access point name (APN) identifier and the EPC determines whether the APN is for home routed or local breakout traffic. **The system is configured to provide Internet Access by first accessing the responder's home system** (i.e. Internet/Intranet traffic is home-routed). This will allow the home agency to continue to support the above enterprise bullet points. This is accomplished by either adjusting the default APN in the responder's HSS record or by requiring the responder's home APN to be programmed into the device (and used during attachment).

Serving the Internet from a home APN lessens the need for additional APNs on the device. Each additional APN may imply the device connects to more and more network segments (and subsequently has multiple IP addresses); increasing complexity and security risks at the device. Therefore, home-routed Internet Access reduces the need for a "local APN" while roaming and improves security on the device.

If the responder's device is allowed to directly access the Internet from the visited system, it bypasses home agency logging, web-site policy, and firewall protections. This would be very harmful to public safety.

B.2 VPN Access to Any Authorized Site and to Home Networks

The FCC has identified roaming onto commercial networks as an essential component for public safety to obtain the bandwidth it needs in a crisis. Further, connection to the commercial operator may likely traverse a roaming clearinghouse. In some cases, even the Internet may be used to carry public safety responder traffic whilst roaming. For these reasons, public safety should not expose control or media traffic to these untrusted networks. **A secure VPN or MVPN is provided for confidentiality and integrity of the responder's UE traffic.** If utilized, a matching device client may be necessary. A dedicated (M)VPN server may also be required and may be deployed with the EPC or agency, as the regional system dictates.

In addition to the description provided in the previous Internet Access section, it is important to note NPSTC's recommendation for VPN access cited secure access to public safety databases and agency reporting by way of the responder's home system.

B.3 Status/Information "Homepage"

The Status/Information Homepage (SIH) builds upon the two previous features. **Access to the local SIH will be provided by way of Internet Access from the home system** (see reasoning in section B.1). Because the content of this web page is sensitive, it must be protected as it traverses un-trusted networks (see reasoning in section B.2).

The SIH is envisioned to provide home and roaming responders with incident-specific information, alerts, system status, weather, traffic, and other information. This information may come from Computer-Aided Dispatch (CAD) terminals, responders, or in the future the NG911 ESInet.

Because routing to the UE's home system is assumed for Internet access the following techniques may be utilized to obtain access to a visited system's SIH:

- **Explicit Addressing**
  The responder explicitly enters the URL (e.g. *https://publicsafety.bignet.gov*) of the region they wish to connect with into their web-browser or selects from a pre-populated list of URLs in the browser. Although this requires responders to know the URLs, or the correct URL to choose, for the systems they wish to obtain information from, it is the most straight-forward approach. Additionally, a well-known national URL could be provided which contains links to all regional SIHs.
- **Location Mapping**
  Responders attempt to access a well known URL and the home system uses location services to redirect the request to the serving region's SIH. This method would require some form of user location information, such as GPS coordinates or serving cell ID, to be provided to the home system. This also requires a supporting directory service which maps user location to status home page address.

For initial deployments, the Explicit Addressing method is utilized until further standardization or policy definition is provided.

Because the SIH will contain sensitive information and be accessed by many different responders (and roaming responders), **role-based authorizations are necessary to protect SIH content.** Because it is impractical for every SIH to contain subscription and authorization information for every public safety device in the U.S., a method is necessary to provide federated identity management to a SIH server in a visited system. The visiting responder's authenticated role must be known by the visited SIH and only information the responder is authorized for (based on role) should be presented. One such widely-adopted technique for

providing federated identity management is the Security Association Markup Language (SAML) framework.

B.4 Access to Responders Under the Incident Command System

The National Incident Command System (NIMS) has defined the Incident Command System (ICS) to help quickly coordinate and organize mutual aid situations for typically large incidents. ICS offers many benefits including a command and control structure, common vocabulary, staging, incident action plan, and integrated communications.

Application servers used for Mutual Aid may be deployed in a variety of ways:

- by the region requesting mutual aid assistance
- by a hosting entity
- on the Internet
- by an on-scene command vehicle (see section 4.5)

Regardless of deployment, applications used for ICS access (such as an ICS server or mutual aid communications service) must be accessible by both home and roaming UEs in the public safety region where the incident is taking place. It may also be necessary for responders outside the incident region to access the Mutual Aid application(s). This requires the public safety region to support an IP plan with route-ability between these different application deployments and home/roaming devices. Techniques that will be required to support this include:

- Static IP addresses
- NAT/NAPT
- DNS
- IPv4v6 translation

B.5 Field-Based Server Applications

Public safety today will deploy "command vans" and other tactical mobile vehicles to address specialized incidents, such as hurricanes. Typically, these vehicles use cellular technology as the "last mile" for an application server co-resident in the command van. Similarly, the LTE air interface will serve as "last mile" for field-based application servers (both fixed and mobile applications).

These application servers must be accessible by:

- responders homed to the same public safety region as deploying the application
- roamers in the same public safety region as deploying the application
- responders homed in other public safety regions or carriers
- Internet users with authorization

In order to achieve this, it is anticipated one or more LTE modems will exist in the command van. From LTE's perspective, each modem will be treated as a UE (i.e. will have an IMSI, be authenticated, etc.), however HSS configuration will allocate the LTE modem a static IP address (part of a well-known local APN in the region). In order to be Internet-visible, this static IP address will have to be NATed to the larger Internet and Internet-visible DNS records must be created. In lieu of providing a static IP address for the command van modem, it is also possible to provide a dynamic IP address and utilize a dynamic DNS service (whereby the dynamic address is directly or indirectly Internet-routable). Such an approach may be more suitable for a command van that serves multiple regional systems. Finally, proper PCC configuration will be necessary to provide suitable "last mile" QoS resources using the LTE air interface.

C. Reliability and Availability

The solution provides for high reliability and high availability for the following network components:

- Data Center and NOC
- LTE Enhanced Packet Core (EPC)
- Transport network
- Radio Access Network (RAN)
- Mobile and portable User Equipment

In addition, the solution also includes support for a MVPN which enables multiple access technologies, such as WLAN, 3G, and commercial carrier 4G networks. Please refer to section A.4 for additional information on the MVPN. The MVPN provides an additional level of disaster resilience by virtue of access to those networks, in that if a network becomes congested or goes down, Public Safety users will be able to obtain service on alternate surviving networks through roaming agreements with the carriers. These agreements with the carriers will add to the reliability and availability of the network. Due to the fact they will be two separate networks. We also plan to partner with San Antonio to fully backup our core for better reliability. We are working on an agreement with the carriers that will allow us to maintain the same level or QoS while roaming onto the carrier networks. We believe this is the way to make certain that we protect our public safety officers and the public they protect.

C.1 Regional Data Center and Network Operations Center

In order to maintain service availability, the network has been designed with multiple layers of redundancy and resiliency. The network can be deployed such that module failures, node failures, and even failure of an entire data center site will not degrade network service availability. The Regional Data Center and NOC can be deployed in a fully-redundant configuration, such that a catastrophic failure of a data center location will not result in the loss of critical functionality, since all operations and traffic can be served by an alternate data center. One example of this is through our partnership with San Antonio who is currently going through the BTOP application process and has already received their waiver. If awarded, their LTE (EPC) will allow a redundancy level that can easily accommodate our combined LTE network infrastructure and clientele footprint. Due to the fact that they are further inland and will connect to us along a major evacuation route is an additional benefit. This relationship also allows for the possibility of using pre-existing dark fiber in the ground along this major interstate for backhaul and redundancy purposes.

Network elements are modular and fault tolerant, providing advanced high availability features. The high availability elements contain internally redundant components which include:

- Redundant data path switch fabrics
- Redundant control path switch fabrics
- Multiple power supplies using separate power feeds and buses
- Redundant network processing modules
- Redundant application processor modules

Server redundancy is supported. In the event of a server failure, redundant server nodes are invoked. High availability network elements include load balancing for application processing modules. In the event of a failure of a module, traffic will be distributed over the remaining active modules. Modules are hot sweppable, with repair and replacement taking place without

disruption of normal operations. The re-initiation of the configuration and software takes place upon replacement of the module prior to being placed into service.

C.2 Enhanced Packet Core

The EPC is comprised of the following standards-compliant network elements:

- Home Subscriber System (HSS)
- Policy and Charging Rules Function (PCRF)
- Serving Gateway (SGW)
- Packet Data Gateway (PGW)
- Mobility Management Entity (MME)
- Element Meneger System (EMS)

These components are internally redundant and designed to provide robust hardware reliability and service assurance. The solution is able to support EPC component pooling to achieve a highly available and resilient system with disaster recovery capabilities. Operation and maintenance components can similarly be deployed independently in redundant and geographically diverse locations.

C.3 Transport Network

Transport network resiliency is accomplished by enabling an IP mesh backbone network. As an analogy, the public Internet is highly available due to inherent mesh and/or ring connection of core routers. Additional resilience in the "last mile" links can be supported by deploying redundant links between the backbone and the network sites. Ethernet switches which comprise the transport nodes also use redundant hardware with dual homed switch ports. Failure of a switch or optical interface module will not result in the loss of traffic flow through the mission critical core. If any failures of switches, links or modules occur, traffic will be switched to a backup module or port. Interface redundancy allows backup links and ports. In addition, Metro fiber rings can be leveraged to connect the cell sites and data centers. Agency networks are equipped with redundant links to each of the data centers. To further assist in this area we will have a microwave backhaul system and possible partnerships with state and commercial fiber owners. This added connectivity will complete the necessary resilience for the scale of network we are planning.

Radio Access Network

The network site civil facilities are constructed according to industry best practice standards for:

- Building construction
- Seismic robustness
- Fire suppression
- Lightening and power surge protection
- Electromagnetic energy safety and interference management
- Power Utility service interconnect and backup power sources

The solution includes site hardening standards which cover the design, construction, and maintenance aspects for each of these disciplines.

The solution also leverages state-of-the-art system-on-chip (SoC) processors. These processors enable an exponential reduction of the number of chips and power consumption of electronic modules as compared to previous generation technologies. As a result, the Mean

Time to Failure (MTTF) of electronic modules has increased significantly as compared to previous generation technologies. This has enabled a reduction in the number of redundant modules while maintaining required levels of service availability.

In addition, the solution will include support for Cells on Wheels (COWS) provide coveraga replacement and/or additional site capacity. This approach requires manual transport of the COWS to the tergel aree. Therefore, this capebility is tergeted et plenned events and large-scale incidents.

C.4 Mobile and Portable User Equipment

The mobile and portable User Equipment (UE) are hardened in accordance with Public Safety best-practices. Generally, the eco-system for LTE 700 MHz broedband Public Safety UE's is still emerging. However, we expecl that as the eco-system matures, a wide range of device capabilities will be available to Public Safety markets, spanning low-and commercial grada devices to high-end davices compliant with military-spacificetions.

D. Radio Frequency (RF) Engineering

RF system pertormence fectors such as coverage footprint, throughput, and capacity depend upon many different variables in RF dasign, including bul not limited to tha number of users, desired site density, system cost, traffic model, etc. As such, these variables are interrelated, so that changes in one variable inevitably impact the olhers. The Hamis County (BIGNET) system is designed to support current users and applications in the most cost effective manner and the design is scalable for future expansion. The following paragraphs describe the tools and methodology used in designing this network.

D.1 Radio Access Network Planning

The Harris County (BIGNET) RAN design leverages extensive experience in modeling and designing wireless packel data networks, as well as extensive experience in RF propagation analysis.

The coverage prediction tools used in this analysis follow a two step process. First, an initial RF propagation analysis of the service area is performed using known models such as Okumura with shadow loss and TSB-88 statistical melhods to provide a highly reliable prediction of coverage performance. Second, the tool performs a discrete event Monte Carlo simulation to model lhe LTE system based on current and futurs requirements. This detailed simulation characterizes the system performance and interference analysis based on a particular number of users and a traffic model. Coverage maps are based on these simulation results, which depict coverage at certain performance levels. Coverage maps for BIGNET including Harris County's proposed LTE footprint and all partnering agencies are provided in Appendix E of this document. Section D.1.4 of this document providas datails of the traffic model used in our simulalions.

D.1.1 RF Propagation analysis

The system is designed with coverage prediction tools, which were developed to provide an accurate prediction of radio coverage for a particular system by applying provan models to detailed system end environmental data across large geographical areas.

The system factors analyzed in the coverage modeling include: frequency, distance, transmitter power, receiver sensitivity, antenna haight, and antenna gain. Environmenlal factors such as terrain variations, obstructions, vegetation, buildings, ambient noise, interference, and land-use

in general are also taken into consideration for the analysis, using the data provided by environmental and topographical databases. Employing the knowledge gained from Motorola's many years of practical experience and coverage testing, these coverage designs are performed by computing coverage, and throughput on every tile in a defined service area, thus providing the most accurate coverage prediction and raliability results.

D.1.2 Network Capacity and Throughput Analysis

The design methodology for the network was intended to meet, at a minimum, the current requirements of Harris County (BIGNET) member agencies as defined in the Harris County (BIGNET) Request for Information (RFI). However, it is recognized that over time Harris County (BIGNET) member agencies will require a more bandwidth intensive traffic model. Further, some member agencies may choose to limit use of commercial carrier networks thus changing the traffic model of the Harris County (BIGNET) LTE network. With these goals in mind, the Harris County (BIGNET) LTE network is designed to carry a certain amount of load per user per busy hour as explained in the "Modeling Assumptions" section below. This approach gives different Harris County (BIGNET) member agencies the flexibility to vary the mix of application types that constitute this network load per user. It also allows the agencies to create a prioritization scheme and standard operating procedures that govern the use of fixed and shared resources in the network under normal and emergency conditions.

D.1.3 Scalability, expandability, and cost effective design

In any wireless network, the goals of coverage and capacity are intertwined and inversely proportional. Keeping in mind the conflicting needs of a cost effective design and high capacity, the network design methodology allows Harris County (BIGNET) member agencies the use of 4G type broadband applications while at the same time maximizing coverage from the available sites to ensure a cost effective solution. This approach anticipates the current capacity requirements and ensures the ability to add further capacity with the addition of sites in the future. Harris County (BIGNET) anticipates the need for a larger number of sites over time to support extensive use of streaming video. Our design offers a flexible approach starting with an affordable network deployment optimized for coverage with a plan to build capacity as additional funding and capacity needs are identified.

D.1.4 Modeling Assumptions

To date much of Public Safety wireless data usage has been limited to narrowband networks and few data points are available to shed light on Public Safety usage on 4th generation broadband networks. While commercial wireless data usage has been increasing significantly in recent years, the more recent widespread use of smart phones has provided some insights into potential data consumption on 4th generation broadband networks.

In order to arrive at a suitable broadband network profile for Public Safety, Harris County (BIGNET) made certain assumption for traffic usage in the south and east Texas region.

The following parameters were also used for this design:

- 95% area reliability.
- Coverage based on up to 4 retries.
- Mobile on street coverage using 23 dBm (200 mw) subscribers.
- 102 concurrent users per sector.
- Average cell edge data rates of 768 Kbps downlink and 200 Kbps uplink.
- 14.9 dB antenna gain at the eNodeB.

- Antennas heights ranging from 75 – 100 feet (unless required otherwise by the Harris County (BIGNET) RFI).
- Single Frequency Reuse of the 10 MHz PSST spectrum in a 5+5 MHz configuration.

A list of initial planned sites and coverage maps is provided in Appendix D of this document.

D.2 Interference Coordination

The solution will employ several techniques and features to mitigate interference among Band 14 eNB's within a region and with adjacent regions. These fall into two general categories: Network Planning and eNB Features. Note that Network Planning techniques may be applied to equipment from any vendor, and thus should be the first line of defense from an interoperability point of view. However, in a multi-vendor environment, eNB Features are dependent on vendor support for specific features and compatibility of the vendor implementations in terms of strategies and optimizations as applied to intra-band interference mitigation. Thus it is possible that vendors of adjacent regions will be required to optimize and/or adapt their eNB feature implementations for interference mitigation compatibility. Below are techniques and features which may be employed in the system:

D.2.1 Network Planning

LTE system capacity and coverage performance depend on interference levels; therefore, interference mitigation is a primary objective of LTE RF system design. Several measures are taken during the system design phase to mitigate interference including selecting appropriate antenna patterns, adjusting the individual sector antenna tilts, and selecting optimal site locations and site separation distances.

D.2.1.1 Site Separation

An LTE system can be designed as noise limited or interference limited, depending on the separation distance between sites. In the case of a noise limited design, the coverage boundary is reached when the desired signal level is within a given threshold of the thermal noise floor. In contrast, when sites are deployed close together in a geographically contiguous manner, performance becomes limited by the co-channel interference as opposed to the thermal noise floor. The site separation distance also depends on the propagation environment and is selected to ensure that all coverage and interference requirements are met. Interference is attenuated more readily in environments where the propagation path loss slope is high and less readily in environments where the propagation path loss slope is low. The proposed vendor's LTE design procedure and tools account for these differences in propagation environment as well as the noise limited versus interference limited considerations when determining the optimal site locations and separation distances.

D.2.1.2 Antenna Down-tilt

Down-tilting is the method of effectively adjusting the vertical radiation pattern of the antenna of the base station to direct the main energy downwards and reduce the energy directed towards the horizon. Down-tilting can be used to improve the level of coverage close to the site where "nulls" (e.g. coverage holes) may exist due to the effective height of the antenna. Down-tilting can also be used to reduce interference caused by reflections or undesired RF propagation beyond a predetermined footprint.

The final phase of the design process incorporates further detail into the design. This phase may include such items as collecting drive data to be used to tune or calibrate the propagation

prediction model, and fine tuning of parameter settings, such as antenna down-tilting. This final design process is required in the deployment of a system. The main benefits of downtilting are:

- Control range of site
- Reduce energy at the horizon
- Maximize effective coverage closer to the site
- Reduce co-channel interference in adjacent sectors

The amount of down-tilt depends on the height of the antenna above the ground, the characteristics of the terrain, and the vertical beam-width of the antenna. The horizontal antenna beam width is selected to be narrow enough to limit interference between sectors yet wide enough to ensure reliable coverage. The vertical antenna beam width is selected to balance good coverage within the serving sector and interference mitigation to distant sectors. Antenna tilts are adjusted for each sector to optimize coverage within the serving sector while attenuating interference to distant sectors.

D.2.2 eNB Features

D.2.2,1 Static ICIC:

Inter-cell Interference Coordination (ICIC) is part of the 3GPP standards. It is recognized as a means to improve coverage and edge of cell performance. This feature is intended to minimize inter-cell interference by providing a fixed, static method of allocating resource blocks between cells within the system. This method relies exclusively on information contained in each eNB, and as such does not require the use of messaging across the X2 interference between eNBs nor does it require any kind of dynamic coordination between eNB scheduler processes. Another aspect of this static ICIC method is support for wideband and narrowband services by allowing the independent scheduler processes to allocate the entire channel bandwidth (all resource blocks) to a single user if needed. An important realization of the use of static ICIC methods is that the real-world traffic distributions are highly non-uniform spatially and temporally. The static ICIC method takes advantage of this non-uniform, time variant traffic to provide maximum coverage and performance for most scheduling opportunities by in essence providing frequency reuse in those situations. This static ICIC method may also be known as Preferred Frequency Reuse. The concept behind this method is to provide each cell with a list of preferred resource blocks for allocations and to make each cell's list unique to avoid interference with adjacent cells.

D.2.2.2 Semi-static ICIC:

Semi-static ICIC is also part of the 3GPP standards. This feature is intended to minimize inter-cell interference by making use of 3GPP standardized messaging across the X2 interference between eNBs. Measurement reports exchanged between eNBs over the X2 interface can be used to support interference coordination in both the downlink and uplink. Semi-static ICIC relies on three types of measurement reports between eNBs. Reporting of Relative Narrowband Transmit Power (RNTP) between neighbor cells enables downlink ICIC. In the uplink, the standard supports reporting of a reactive Overload Indicator (OI), which indicates the level of uplink interference and noise. The standard also supports a second uplink indicator, High Interference Indicator (HII), which allows an eNB to report to neighboring eNBs that it will soon be scheduling uplink traffic by one or more cell-edge UEs in certain parts of the bandwidth. These three measurements can be exchanged on a periodic basis between neighboring eNBs to allow the eNBs to reconfigure their usage of Resource Blocks.

D.2.2.3 Frequency Selective Scheduling:

OFDM systems can take advantage of frequency diversity and frequency selectivity gain via scheduler algorithms. Frequency diversity gain is achieved by allocating a UE in subcarriers spread across the entire carrier bandwidth. Frequency selectivity gain is achieved by allocating an UE a contiguous set of sub-bands within some fraction of the carrier bandwidth that is favorable to that UE based on narrowband fading conditions and/or interference. Frequency diversity scheduling may be preferred for users with high mobility while fraquency selective scheduling is praferred for users with low mobility.

E. Testing

This section of the document describes the activities associated with testing which validates key functionality, performance and interoperability requirements of the PS LTE solution. This is in addition to the extensive testing performed by the solution provider in their internal laboratories to ensure conformance of their LTE solution to 3GPP standards. An outline of this testing can be provided by our solutions provider. We as a Waiver Recipient are also planning to participate in the PSCR/DC demonstration network, starting in 2010. In order to meet the requirement of the Waiver Order, a trial activity will be planned using our selected PSLTE solution. This trial activity will constitute and form the basis for initial testing of the system. This section provides an ovarview of the trial activities (initial testing).

The trial lifecycle is broken into four stages: Site readiness, installation activities, interoperability testing, and test execution for specific functionality and applications.

Site Readiness: This includes all activities related to preparing the chosen site(s) for equipment installation. Site readiness begins after the sites have been identified for the trial.

Installation: This includes all activitias related to installing the trial equipment. This staga is started once site readinass has completed and ends when all the equipment associated with the trial network has been installed. This stage also includes any testing to verify that the equipment was installed corractly (ref Health Check).

IOT: This staga specifies the interoperability tests executed as part of the trial network. It includes all activities related to validating that other supplier components of the trial network are functioning correctly with our solutions provider's components of the trial network prior to initiating trial testing.

There are two aspects of interoperability testing that must ba addressed: 1) The Network, and 2) Devices. The network component validates that the other suppliers' network elements are sufficiently functional with our selected supplier's network components to initiate trial testing. The devices component validates that the devicas used in the trial are sufficiently functional with our network components to initiate trial testing. The signaling procedures for the different interfacas will be tested using system lavel use cases as defined in the table below.

Figure 1.0 Interface Procedure to System Use Case Mapping – S1

Interface	Interface Specification Procedure	System Level Use Case
S1-MME	Reset	Link Management
	S1 Setup	
	Handover	S1 Based Handover

	E-RAB Setup, Modify, end Release	Dedicated Bearers
	Initial UE/Context	Attach, Detach, Authentication, TAU
	UE Context Request, Release Modification	Attach, Detach, Dedicated Beerers
	Uplink/Downlink NAS Transport, NAS Delivery/Error Indication	Attach, Detach, Authentication, TAU, Dedicated Beerers
S1-U	GTP Procedures	Link Management
	Bearer w/o Fragmentation	Uplink/Downlink Bearer Traffic
	Bearer with Fragmentation	Uplink/Downlink Bearer Traffic

The system level use cases that will be used to trigger and drive messaging for the IOT interfaces are detailed below:

S1-MME

- Link Management
- Attach
- Ralease
- Service Request
- Tracking Area Updates
- Detach
- Authentication
- Dedicated Bearers
- Handovers

S1-U

- Link Management
- Non-fragmented IP over GTP-U
- Fragmented IP over GTP-U

Uu-LTE: This is demonstrated using the devices. This will also have been demonstrated through device vendor specific IOT testing in the lab.

Test Execution: This stage specifies the functional and performance tests executed as part of the trial. This stage is started once interoperability testing has completed. The following aspects will be tested:

- Inter-Node Communication Verification
- Operations and Maintenance (OAM)
- Single User Stationary Calls
- Multiple Users Stationary Calls
- Single User Throughput vs. Mobility
- Single User with QoS
- Multiple Users with QoS
- Multiple Users Mobility with QoS

As part of the goal to achieve nationwide interoperability, the following applications and interfaces will be tested as part of the trial activities, with testing distributed over time and as the technology matures (features are added) and the standards evolve. The applications and interfaces to be tested in the initial trial timeframe (2010) are noted. The interfaces that are in

support of the required roaming model will be tested in two ways. Those interfaces that are part of the roaming feature will be tested in our supplier's internal laboratory environment. As systems are deployed in the field, and as we encounter other vendors' equipment outside of our home network, we will actively work to conduct the proper IOT testing with that agency (local or regional) and their supplier to verify the implemented solution. In this way we will address the fundamental roaming requirement and in testing the interfaces (visited to home) listed below.

Applications

- Internet access (Initial Trial)
- VPN access to any authorized site and to home networks
- Status or information homepage
- Access to responders under the Incident Command System
- Field-based server applications (Initial Trail)

Interfaces

- Uu-LTE air interface (Initial Trial)
- S6a-Visited MME to Home HSS
- S8-Visited SGW to Home PGW
- S9-Visited PCRF to Home PCRF for dynamic policy arbitration
- S10-MME to MME support for Category 1 handover support
- X2-eNB to eNB (Initial Trial)

For the trial network, a configuration consisting of the following elements (in addition to tools and transport elements) will be used as the test bed: eNB, UE (USB dongle, VSM, and/or Handheld Portable, availability to be specified in our Roadmap over time), MME, S/P GW, and HSS/PCRF.

The software used in the test bed and as part of the verification trial is compliant to 3GPP Release 8 of the LTE standard.

A listing of LTE test tools utilized by the solution is included in H.Appendix D.

F. Deployment

In this section we will outline the Harris County BIGNET deployment plan . Please also refer to the Chart D.1 and Graph D.2 in appendix D.

Pre-Build out schedule

9/1/2010 - 1/28/2011

- Team formed with Harris County, vender and carrier partner.
- Office Build out for addition staff and vender team
- Hardened facility service agreement finalized
- Site survey done on all sites
- List of carrier partner co-located sites established
- List of non carrier sites established
- Fiber connectivity for backhaul solidified and estimated cost with SLA approved
- RF and environmental studies done
- Contracts, leases, permits and other logistical paperwork established
- BIGNET committee made aware of intent to begin construction

- The HSS , PGW, and PCRF which make up the upper core will be purchased end located at the hardened facility
- A MME and SGW that make up the lower core will be purchased and installed at 406 Caroline a matching set will be installed at the herdened facility providing redundant paths.
- The PSIG will be purchased and installed at 406 Caroline
- Mobile command and COW purchased for Mid- project Business continuity Preparation
- Additional support items in the form of servers , storage , network hardware , applications and licenses , firewalls , IPS , AC, Power cabling and infrastructure , as well as support personnel are purchased and implemented at 406 Caroline

Build out Schedule Phase 1 /year 1

(60 sites per year - 5 per month -180 remain)

9/1/2010- 9/1/2011

- Equipment order phase one
- Infrastructure build out / tower bunker construction and certification
- Equipment installation of cellular, backhaul, fiber connectivity
- Testing signal strength and range
- Testing redundant path and backhaul
- Site certification, activation, and monitoring

Interoperability connection and development

1/1/2011 – 6/30/2011

- Connectivity of the PSIG to LMR P25 SYSTEM TEST
- Connectivity to the county internet test
- Firewall retention and policy enforcement test
- Application and development justice apps test
- Roaming to and from carrier network test
- Carrier application usage on network test
- E-mail and text routing test
- Integration of client apps into network test
- Use and policy enforcement test
- Priority of service test
- Priority of service over carrier test
- Connection to state or federal applications test
- Connection to San Antonio EPC core network test

- Transfer of load to San Antonio core test
- 911 and GH911 integration
- Begin initial client loading and modify accordingly

Build out Schedule phase 2/year 2

(60 sites per year - 5 per month-120 remain)

9/1/2011 – 9/1/2012

- Equipment order phase two
- Infrastructure build out / tower bunker construction and certification
- Equipment installation of cellular, backhaul, fiber connectivity
- Testing signal strength and range
- Testing redundant path and backhaul
- Site certification, activation, and monitoring
- Continue client loading improve issues with phase I
- Report Progress to BIGNET, technical, and system owners/ partners committees

Interoperability connection and development – online

8/30/2012 – 9/30/2012

- Connectivity of the PSIG to LMR P25 SYSTEM (Production)
- Connectivity to the county internet (Production)
- Firewall retention end policy enforcement (Production)
- Application and development justice apps (Production)
- Roaming to and from carrier network (Production)
- Carrier application usage on network (Production)
- E-mail and text routing (Production)
- Integration of client apps into network (Production)
- Use and policy enforcement (Production)
- Priority of service (Production)
- Priority of service over carrier (Production)
- Connection to state or federal applications (Production)

- Connection to San Antonio EPC core network (Production)
- Transfer of load to San Antonio core (Production)
- Continue initial client loading and modify accordingly

Build out Schedule phase 3/year 3

(60 sites per year - 5 per month-60 remain)

9/1/2012 – 9/1/2013

- Equipment order phase three
- Infrastructure build out / tower bunker construction and certification
- Equipment installation of cellular, backhaul, fiber connectivity
- Testing signal strength and range
- Testing redundant path and backhaul
- Site certification, activation, and monitoring
- Continue client loading improve issues with phase 2

Project evaluation, next step determination phase

- Report Progress to BIGNET, technical, and system owners/ partners committees

G. Operations, Administration and Maintenance

The OAM&P solution is comprehensive and standards-based. It encompasses the entire lifecycle, including system design, assembly and staging, installation and commissioning, operations, optimization, and billing. The operations solution includes Fault Management, Configuration Management, Accounting Management, and Performance Management (FCAPS) support for the system infrastructure and devices, as well as the following advanced capabilities:

Network Management System (NMS). The NMS provides an integrated point of control for the system. It includes network monitoring and recovery, security monitoring, performence management analysis and reporting, integrated configuration management, and infrastructure software upgrade.

Over The Air (OTA) Device Management. The device management solution is an industry standard solution that works with any Open Management Alliance (OMA) client device. The solution Device Manager provides an easy-to-use interface to perform software upgrade, configuration and provisioning of a variety of public safety devices, including portables, vehicular modems, dongles, and mobile data terminals.

Self Organizing Network (SON). The system SON solution, fully based on 3GPP standards, provides a self-configuring, self-healing, and self-optimizing RAN solution. System planning requirements are significantly reduced, as cell neighbors and LTE physical cell identifiers are automatically determined by the RAN infrastructure. Infrastructure equipment is automatically

discovered and provisioned. The SON solution should simplify emergency coverage such as Cell On Wheels (COW). Key features of the SON offering include:

Automatic Neighbor Relations (ANR), which automatically determines the neighbors for each cell in the network, and continuously optimizes the neighbour lists.

Automatic Physicel Cell ID (PCI), which automatically computes the LTE physical cell identifier for each cell in the network.

Automatic Load Balancing, which biases the handoff decisions based on the load presented in a particular cell.

Automatic Handover Optimization, which optimizes the handovers between calls to eliminate too-late and too-early handovers.

Integrated Subscriber Provisioning. The solution provides an integrated subscriber provisioning solution that simplifies the process of adding new broadband subscribers to the Regional Public Safety System and the Agency.

Integrated Billing. The system provides an integrated billing solution that supplies charging information, including the ability to support complex roaming and usage-based accounting. The billing solution provides robust data analysis, reporting, invoicing and data warehousing.

OAM&P exhibits the following points of interoperability:

- The self-organizing network (SON) consists of use cases and interfaces defined by 3GPP and algorithmic processing to be defined by aach vendor. SON algorithm compatibility must be verified between vendors. Automatic Neighbor Relations (ANR) and Automatic Physical Cell ID (PCI) are two examples of SON algorithms that need to be verified for interoperability between LTE vendors. This interoperability must be demonstrated within a multi-vendor regional network as well as across regional boundaries.
- From a security perspective, the OA&M authentication and authorization framework utilizes industry standard secure protocols to enable operational access within the system. The interoperability solution leverages SSH , HTTPS and SNMPv3 to maintain confidentiality and integrity of management related information. User authentication and authorization is enabled through the use of LDAP and TACACS+. In addition, where web based UIs are provided, the Security Assertion Markup Language (SAML) is supported enabling single sign-on authorization across different administrative user interfaces within the system.
- Subscriber provisioning use cases and interfaces between the Public Safety Agency, Regional Public Safety Network and the Commercial Carrier Network must be formalized.
- Devices should be OMA-compliant in order to support standards-based device management.

Appendices

Appendix A. Definitions and Acronyms

ARP	Allocation and Retention Priority
BBTF	Broadband Task Force
CAD	Computer Aided Dispatch
CJIS	Criminal Justice Information System
DNS	Domain Name Service
EPC	Enhanced Packet Core
E-RAB	EUTRAN Radio Access Bearer
FIPS	Federal Information Protection Standards
GPS	Global Positioning System
GTP	Generic Tunneling Protocol
HAAT	Height Above Average Terrain
HO	Handover
HSS	Home Subscriber Server
ICIC	Inter-Cell Interference Coordination
IKE	Internet Key Exchange
IOT	Inter-Operability Testing
IP	Internet Protocol
IPX	IP Exchange (see http://www.gsmworld.com/our-work/programmes-and-initiatives/ip-networking/ipi_documents.htm)
LTE	Long Term Evolution
MBMS	Multimedia Broadcast Multicast Service
MME	Mobility Management Entity
MVPN	Mobile Virtual Private Network
NAPT	Network Address and Port Translation
NAS	Non-Access Stratum
NAT	Network Address Translation
NCIC	National Crime Information Center
NOC	Network Operations Center
NPSTC	National Public Safety Telecommunications Council
OAM&P	Operations, Administration, Maintenance, and Provisioning

OMA-DM	Open Mobile Alliance – Device Management
OOBE	Out of Band Emissions
PC	Personal Computer
PCRF	Policy and Charging Rules Function
PDN	Packet Data Network
PGW	PDN Gateway
PKI	Public Key Infrastructure
PLMN ID	Public Land Mobile Network Identifier
PMIP	Proxy Mobile IP
PSST	Public Safety Spectrum Trust
PTT	Push To Talk
QCI	QoS Class Identifier
QoS	Quality of Service
RAN	Radio Access Network
RAT	Radio Access Technology
RFI	Request for Information
SGW	Serving Gateway
SIB	System Information Block
SON	Self Organizing Network
TAU	Tracking Area Update
TS	Technical Specification
TSB	Telecommunications System Bulletin
UASI	Urban Area Security Initiative
UE	User Equipment
VLAN	Virtual Local Area Network
VoIP	Voice over Internet Protocol
VPN	Virtual Private Network
WAN	Wide Area Network

Appendix B. LTE/EPC Functions and Interfaces

This section provides a detailed description of the LTE RAN and EPC infrastructure elements, as well as their corresponding interfaces, and is provided as a supplement to sections A.1, A.2 and A.3.

eNB - The eNodeB (eNB) provides the user plane and control plane protocol terminations toward the UE. The eNB consists of the inter-working function between the backhaul interface and the base band interface, the base band processing elements for the air interface, and the radios.

- Radio Resource Management - Assignment, Re-assignment, and Release of radio resources
    - Radio Bearer Control (RBC) - Responsible for the Establishment, Maintenance, and Release of radio resources associated with specific radio bearers. The RBC function must maintain the quality of existing sessions when conditions change due to environmental and mobility activity.
    - Radio Admission Control (RAC) - Responsible for maximizing the radio resource utilization by intelligent admission or rejection of new radio bearer requests.
    - Connection Mobility Control (CMC) - Responsible for the management of radio resources during active or idle mode mobility of the UEs.
    - Dynamic Resource Allocation (DRA) - Packet Scheduler (PS) - Responsible for the scheduling of both user plane and control plane packets over the air interface. Scheduling takes into account QoS requirements of users, radio conditions, available resources, etc. to efficiently utilize the radio resources for all active users.
- MME Selection when UE initially attaches - A single eNB may have communication links to multiple MMEs. The controlling MME for each session must be selected if the UE does not indicate a specific MME to be used, or if the MME specified by the UE is unreachable.
- Routing user plane data to the SGW - A single eNB may have communication links to multiple SGWs. The data stream for each UE must be routed to the appropriate SGW.
- Scheduling and transmission of paging messages received from the MME.
- Scheduling and transmission of broadcast information received from the MME or configured from the Element Manager - The scheduling on the appropriate radio resource block and periodic broadcasting is performed by the eNB.
- Measurement gathering for use in scheduling and mobility decisions - Scheduling and handover decisions are performed based on uplink related measurement data from the eNB and downlink related measurement data from the UE. The eNB configures the measuring and reporting criteria and collects the data for input to the scheduling and handover functions.
- Radio Protocol Support
    - Radio Protocol Support
    - Physical Layer (Control and Bearer)

  - MAC (Control and Bearer)
  - RLC (Control and Bearer)
  - PDCP (Control and Bearer)
  - RRC (Control)
  - Session Trace

- Inter-eNB handover preparation, Context & Buffer forwarding, Inter-cell interference coordination over X2 interface.
- eNB also forwards buffered downlink data during the Inter eNB handovers using non guaranteed delivery of user plane PDUs.

MME - The MME (Mobility Management Entity) manages authenticating users on the EPC and tracks active and idle users in the RAN. The MME pages users when triggered by new data arriving for an idle user at the assigned SGW. When a user attaches to an eNB, the eNB selects a serving MME. The serving MME selects a SGW and a PGW to handle the users bearer packets. The MME provides the following functions:

- Non-Access Stratum (NAS) Signaling. The MME is the termination point in the network for ciphering/integrity protection for NAS signaling and handles the security key management.
- Authentication: The MME is responsible for authenticating the UE by interacting with the HSS and is also responsible for the generation and allocation of temporary identities to UEs.
- Idle State Mobility Handling. The MME is responsible for idle mode UE tracking and paging procedure including retransmissions. The MME handles page request to its associated eNBs that contained the tracking area list last registered by the UE.
- EPC Bearer Control. The MME is involved in the bearer activation/deactivation process and is also responsible for selecting the SGW and PDN-GW for a UE at the initial attach, dedicated bearer activation, service request, and handover involving MME or SGW relocation.

SGW - The Serving Gateway terminates the S1-U interface towards EUTRAN and is also the local mobility anchor for the UE. The mobility anchor function applies to a mobile in the EUTRAN. In a commercial network, the mobility anchor also applies to a mobile transitioning from a non-3GPP network to a 3GPP network owned by the same operator. For each UE associated with the Evolved Packet System (EPS), at a given point of time, there is a single serving SGW. The SGW maintains a packet buffer for each idle UE and holds the packets until the UE is paged and an RF channel is re-established. The SGW maintains a connection to a PGW for each UE. The SGW provides the following functions:

- Local Mobility Anchor point for inter-eNB handover
- Packet routing and forwarding
- Assist the eNB reordering function during inter-eNB handover by sending one or more "end marker" packets to the source eNB immediately after switching the path
- E-UTRAN idle mode downlink packet buffering and initiation of network triggered service request procedure

PGW - The Packet Data Network Gateway (PGW) is the gateway which terminates the SGi interface towards the PDN (e.g. agencies network). The PGW is a macro mobility anchor and is responsible for UE address assignment. The PGW provides the following functions:

- The Packet Data Network Gateway terminates the SGi interface towards the PDN. The PGW supports connectivity of UE's traffic to specified interfaces based on APN (Access Point Name). The APN determines which PDN a UE is connected to.
- UE IP address allocation, DHCPv4 (server and client) and DHCPv6 (client, relay and server) functions
- The PGW is the source of service data flow based charging records for the UE.
- The PGW acts as the macro mobility anchor for the UE across EUTRAN.
- UL and DL bearer binding and UL bearer binding verification.
- Transfer of (QoS) policy and charging rules from PCRF to Policy and Charging Enforcement Function (PCEF) in the PGW. Policing and shaping the traffic rate of the user's downlink EPS bearers.
- Transport level packet marking in the uplink and downlink, e.g. setting the DiffServ Code Point, based on the QCI of the associated EPS bearer.

HSS – The HSS stores UE subscription and authentication data for authenticating/authorizing UE access. The HSS provides the following functions:

- Authentication and authorization data for the UE
- Location information of the UE (MME and PGW serving the UE)
- Lawful intercept support
- The HSS in the solution shares the UE subscriber database with the PCRF

PCRF - The PCRF provides network control regarding the service data flow detection, gating, QoS authorization and flow based charging (except credit management) towards the network element. The PCRF supports dynamic interfaces towards applications and a rule based engine that allows policy rules to be executed and the resulting policy passed to the PGW. The PCRF can pass both QoS and charging rules to the PGW. The PCRF uses the **SPR** (Subscriber Profile Repository) to store subscription profile records. The PCRF provides the following functions:

- PCRF decides how service data flows will be treated in the PGW, and ensures that the PGW user plane traffic mapping and treatment is in accordance with the user's subscription profile.
- PCRF will check that the service information is consistent with both the operator defined policy rules and the related subscription information. Service information will be used to derive the authorized QoS for the service.
- PCRF authorizes QoS resources. The PCRF uses the service information and/or the subscription information to calculate the proper QoS authorization (QoS class identifier, bit rates, etc.).
- PCRF can use the subscription information as basis for the policy and charging control decisions.

- PCRF supports different bearer establishment modes (UE-only, UE/Network or Network-only).

Supported Interfaces:

- **LTE-Uu** - This interface carries control and user (bearer) signaling between the eNB and the UE to facilitate the delivery of high speed data services to the end user. The associated control plane signaling supports mobility management, session management, admission control, QoS management, radio resource/connection management and all other functions that are necessary to enable the transfer of application data across the user plane.
- **Gx** - Provides transfer of (QoS) policy and charging rules from PCRF to the PGW.
- **Gz** - This interface is based on the GTP prime protocol. It is used to transfer Charging Detail Records (CDRs) from a PGW and/or SGW to a Charging Gateway in support of offline charging.
- **Rf/Ga** - This interface based on the DIAMETER protocol. It is used to transfer Charging Detail Records (CDRs) from a PGW and/or SGW to a Charging Gateway in support of offline charging.
- **Rx** – This reference point enables transport of application level session information from application to PCRF. Such information includes IP filter information to identify the service data flow and Media/application bandwidth requirements for QoS control.
- **S1-MME** - Control plane signaling between the eNB and the MME
- **S1-U** - Bearer plane support between the eNB and the SGW. In general, procedures for the S1-MME interface may affect the setup or teardown of a bearer link; however, the standards do not indicate specific procedures between the eNB and SGW. This path interface is for uplink and downlink data only.
- **S5** - The S5 interface provides user plane tunneling and tunnel management between SGW and PGW. It is used for SGW relocation due to UE mobility and if the SGW needs to connect to a non-collocated PGW for the required PDN connectivity.
- **S6a** - This interface enables the transfer of subscription and authentication data used for UE access to the LTE system. It carries control messages between the MME and the HSS over DIAMETER.
- **S8** – Roaming version of S5 for communication between a visited SGW and a home PGW.
- **S9** – The S9 interface is between a home PCRF and a visited PCRF in the case of local breakout.
- **S10** - This interface carries control messages between MMEs.
- **S11** - This interface carries control messages between the MME and the SGW.
- **SGi** - This interface carries bearer traffic between the UE and the agencies PDN. This interface optionally carries control traffic between the PGW and the agencies PDN to facilitate IP address allocation, IP parameter configuration and AAA services associated with UE activity.

- **SP** – This is a named interface between the PCRF and its subscriber database, the SPR. This interface is not standardized
- **X2** - The X2 interface provides a control plane and bearer plane connection between eNBs to support load management and handover procedures.

Appendix C. Priority Access and QoS Configurations

G.1.1 General Priority Access and QoS Configurations

When a responder roams from one regional system to the next regional system (or to commercial carrier network), there are certain parameters that should be standardized so that roaming QoS can be more easily facilitated. While it is possible for a for a home LTE system to map QoS policy for every unique roamed-to network, this is difficult to manage, and cumbersome at best. The need for standardized QoS parameters becomes especially needed for LTE "home routed traffic" (i.e. the use of the S8 roaming interface, which the FCC has required).

Configuration – Implement the PCRF
Inclusion of a Policy and Charging Rules Function (PCRF) is optional in LTE, however because of public safety's desire to support session-oriented, QoS-enabled traffic, home routed traffic, and roaming to both public safety and commercial carrier network, a PCRF is essential. Complex policy rules that vary between PLMNs may also be needed, requiring a PCRF. For these reasons, all public safety LTE deployments should include a PCRF.

Configuration – Public Safety First Responders Use Reserved Access Class 14

LTE includes "Access Class Barring", a method to prevent congestion of the control channel at busy eNBs. While assigning access class 14 to devices operating on a public safety system isn't expected to offer a significant benefit (because most devices will be the same access class), access class 14 can be of significant benefit when public safety roams to commercial carrier networks because commercial users will typically be of lower access class(es). In order for this to be effective, access class 14 must be reserved for public safety usage. This configuration matches recommendations made by the NGN/GETS effort.

Configuration – Standardize QCI Values across Public Safety Regional Systems and Commercial Systems

The QoS Class Identifier is a scalar parameter that maps to QoS scheduling characteristics at the eNB (such as scheduling priority, packet delay budget, packet error loss rate, etc.) 3GPP TS 23.203 includes a table that maps standard QCI values to QoS attributes. When a UE roams, the QCI scalar is passed from the home to visited system. If the QoS attributes that map to the QCI scalar are different than the home system, this could result in poor (or no) application performance. It is key to require 3GPP standardized QCI scalars (and the QoS characteristics they map to) for public safety and commercial LTE systems. A "reserved for future use" QCI range is also established with all public safety and commercial LTE systems. This will allow future specialized public safety applications to be added.

The remaining configurations in this section focus on LTE's Allocation and Retention Priority (ARP). The ARP includes 3 attributes:

a. the priority a bearer will have for admission control at the eNB (and subsequently if it should be pre-empted at a future time)

b. whether or not the bearer can be preempted

c. whether when admitting the new bearer the eNB should attempt to preempt other bearers to make room for the new bearer

The remainder of this section focuses on ARP configurations. Figure 3.6.1-1 as a framework for how ARP can work between systems.

Configuration – The Highest ARP Priority Should Be Reserved for Responder Emergency

For both commercial carrier and Public Safety systems, standardization of this value insures the health and well-being of public safety and insures LTE resources are available under life-threatening conditions.

Configuration – Standardize Number of ARP Priority Buckets

Figure 5 suggests the possibility of four priority buckets (Responder Emergency, High, Medium, Low). The actual number of buckets is open to debate, however, the important point is once the number of buckets is chosen, the buckets must be available on both commercial and regional public safety systems. Defining a consistent set of ARP priority buckets facilitates inter-system QoS, which is essential to a consistent roaming experience.

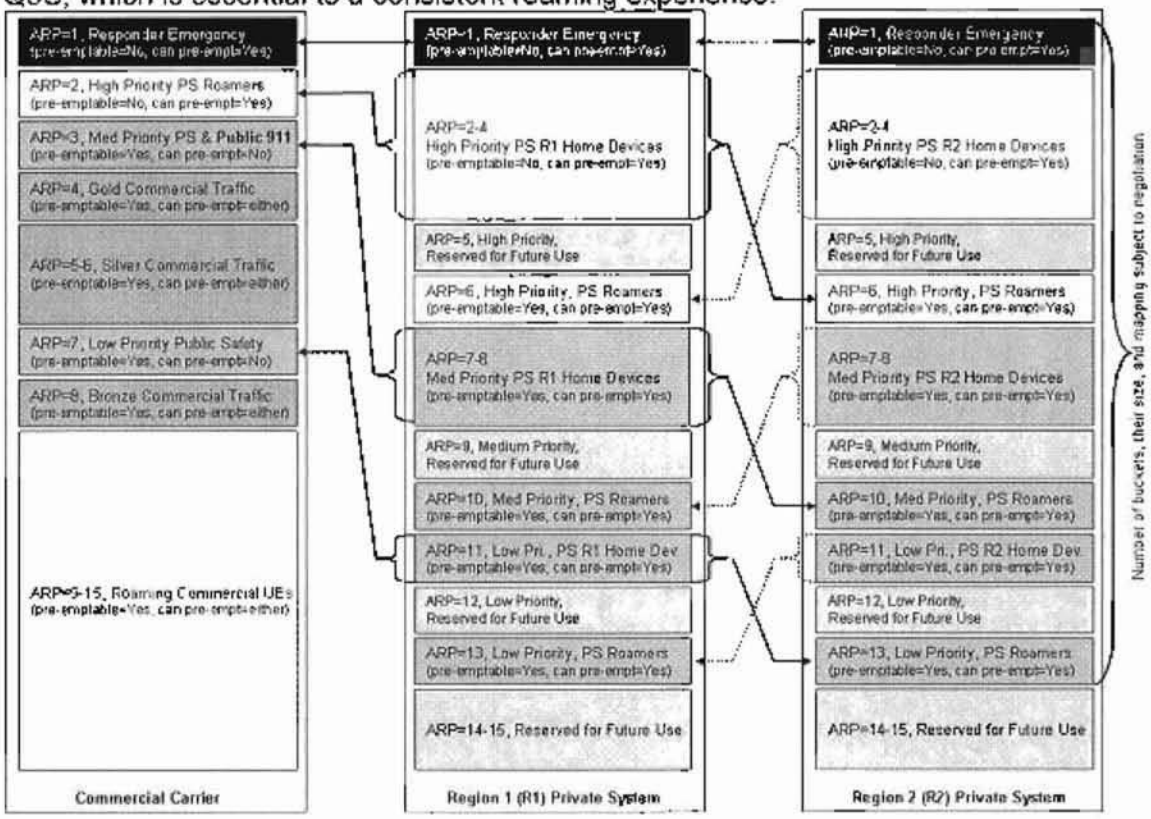

Figure 5: ARP Mapping Between Public Safety and Commercial Carrier Networks

G.1.2 Roaming to Commercial Public LTE Systems

Configurations in this section apply to the case when a public safety device (home to a specific public safety regional system) attempts to roam to a commercial carrier network.

Configuration – Carriers Support All ARP Priority Buckets

After the number of ARP priority buckets is selected for use on regional public safety networks, then the same number of buckets should be available on carrier systems. When mapping ARP from a public safety regional system to a commercial carrier system, it is envisioned only 1 ARP priority will represent an entire ARP priority bucket on a public safety regional system because

the carrier has additional constraints on ARP usage. For example, the LTE standard recommends ARP priority values 9-15 be reserved for public roamers onto public spectrum.

Configuration – Public Safety Bearers Associated with the Responder Emergency and High Priority ARP Values Should Not Be Preempted

Because public safety will require the use of carrier spectrum in many circumstances (i.e. because the PSST 5+5MHz capacity can be insufficient), bearers in these categories should be allowed to be established onto the commercial system and the bearers should be able to continue until de-activated by the responder.

Configuration – Public Safety Bearers Associated with the Responder Emergency and High Priority ARP Values Should Be Able to Preempt Other Lower Priority Bearers

Public safety using this higher priority ARP values must be allowed to instantly obtain resources as needed from lower priority commercial traffic (and even lower priority public safety traffic).

G.1.3 Roaming to Other Regional Public Safety LTE Systems

Configurations in this section apply to the case when a public safety device (homed to a specific regional system) attempts to roam to an EPC serving another public safety region.

Configuration – Allow Each Region to Use the ARP Priority Buckets to Fit Their Needs

Within the confines of each priority bucket in the public safety regional network, public safety should be free to assign what UEs, applications, etc. map to each priority bucket. Today, some public safety systems prioritize based on application, and others based on responder role. Many agencies have expressed a desire for incident-based priority on LTE. This configuration gives public safety an excellent balance between regional flexibility (whether for incident, application, device, or other priority scheme) and inter-system roaming compatibility.

Configuration – Public Safety Roamers Can Be Assigned to Each Priority Bucket

In order to facilitate relatively consistent prioritization between public safety regions, it is expected that roamers between regional public safety systems be allowed to utilize each of the ARP buckets. For LTE home routed traffic, the home PCRF assigns the ARP priority of the bearer established in the visited system's eNB. For this reason, a consistent treatment of roamers is essential in the prioritization hierarchy.

Configuration – A Roaming UE's Bearers may be preempted

When a public safety UE roams to another public safety LTE system, the visited system should have ultimate control over its resources. For this reason, all bearers for roamers (other than the Responder Emergency bucket) may be preempted.

Configuration - Public Safety Bearers Associated with the Responder Emergency and High Priority ARP Values Should Be Able to Preempt Other Lower Priority Bearers

As with roaming to public systems, the use of higher priority ARP ranges must be allowed to instantly obtain resources as needed from lower priority public safety bearers.

Appendix D. LTE Test Tools

LTE Test Tools		
Function	**Tool (specified or equivalent)**	**Description**
Spectrum Analyzer	Agilent SA	Cell coverage, characteristics
Air Interface Monitor	UE Tool	Synchronization, system broadcast information, registration, DL/UL transfers
	Sanjole WaveJudge	
Network Monitor	Wireshark – Windows PC	Protocol dissectors to analyze L1/L2/L3, per segment
Service Simulator	Iperf – Windows PC	Service emulator using TCP and UDP pseudo packets and setting up bearer types and QoS over the air
Service Evaluator	Wireshark – Windows PC	Transport Quality (Loss, Latency, Jitter, Throughput), Handover Latency
UE	Available UE	Will be provided

Appendix E. BIGNET Definition & Coverage Maps

BIGNET-- Public safety entities in the 28 Counties in the Broadband Interoperability Gateway Network East Texas (BIGNET) area have collaborated to identify community anchor institutions, private entities, and non-governmental agencies to develop a comprehensive, regional public safety network that would provide emergency responders with broadband access and increased interoperability capabilities. Previous regional catastrophic event planning identified key gaps in emergency preparedness and response and underscored the need for a hardened state-of-the-art broadband network that would be available to emergency responders, not only during routine service but also during a critical incident or a catastrophic event.

LTE Coverage on street (Harris County) – USB Dongle inside vehicle with no external antenna

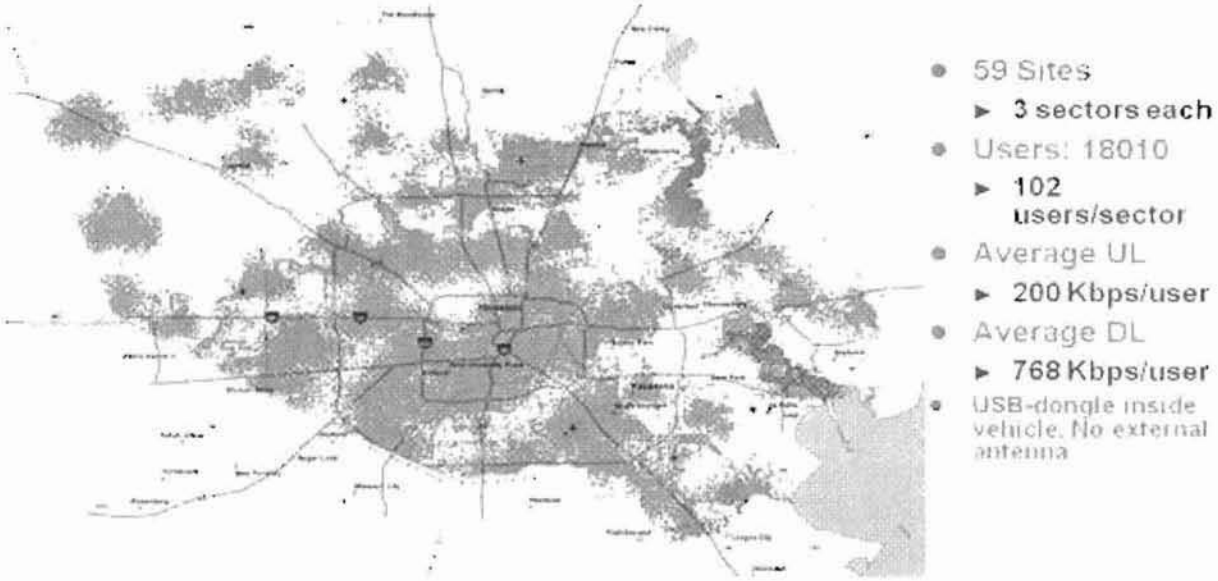

LTE Coverage on street (Harris County) - Vehicle Modem

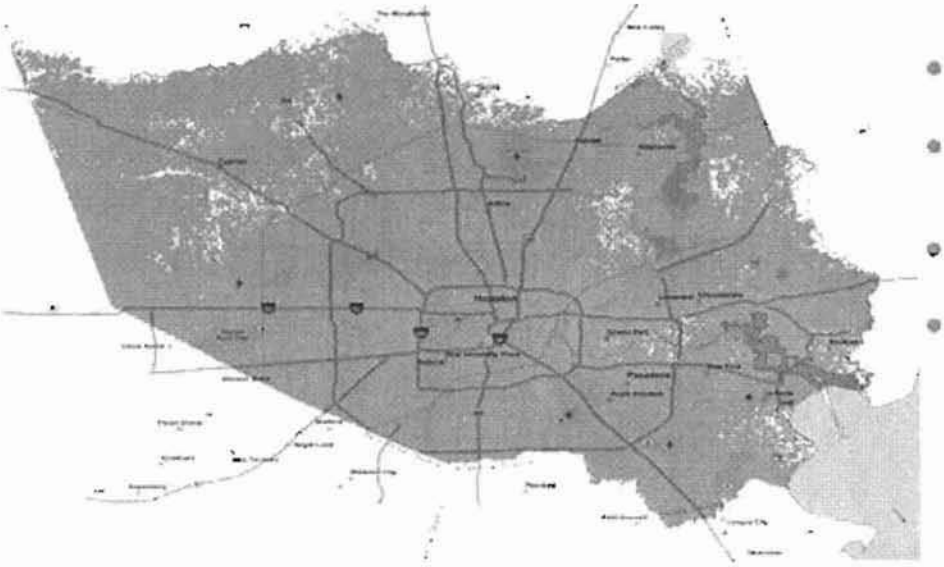

- 59 Sites
  - 3 sectors each
- Users: 18010
  - 102 users/sector
- Average UL
  - 200 Kbps/user
- Average DL
  - 768 Kbps/user

LTE Coverage (Outside Harris County) – USB Dongle

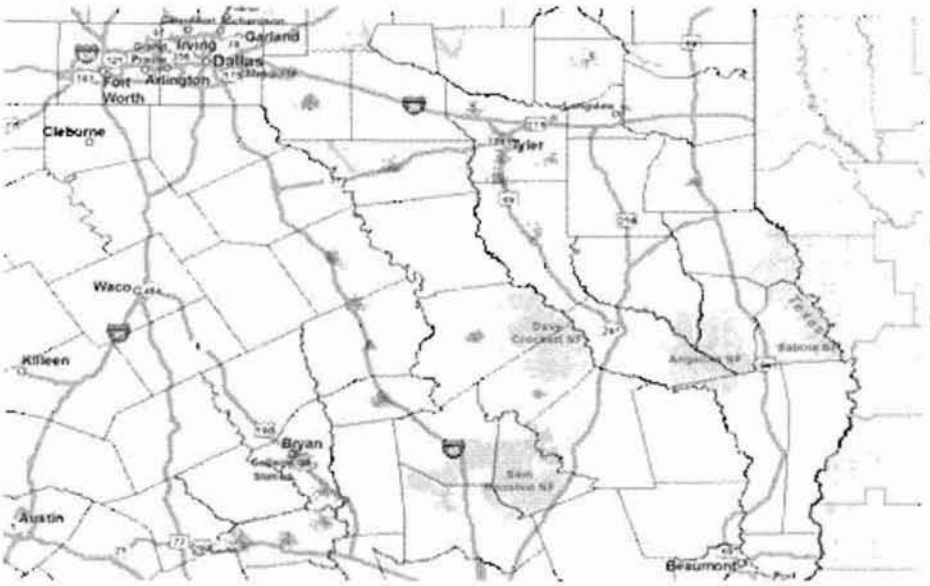

- 26 Sites
  - 3 sectors each
- Users: 9005
  - 51 users/sector
- Average UL
  - 200 Kbps/user
- Average DL
  - 768 Kbps/user

Gantt Deployment Schedule Chart D.1

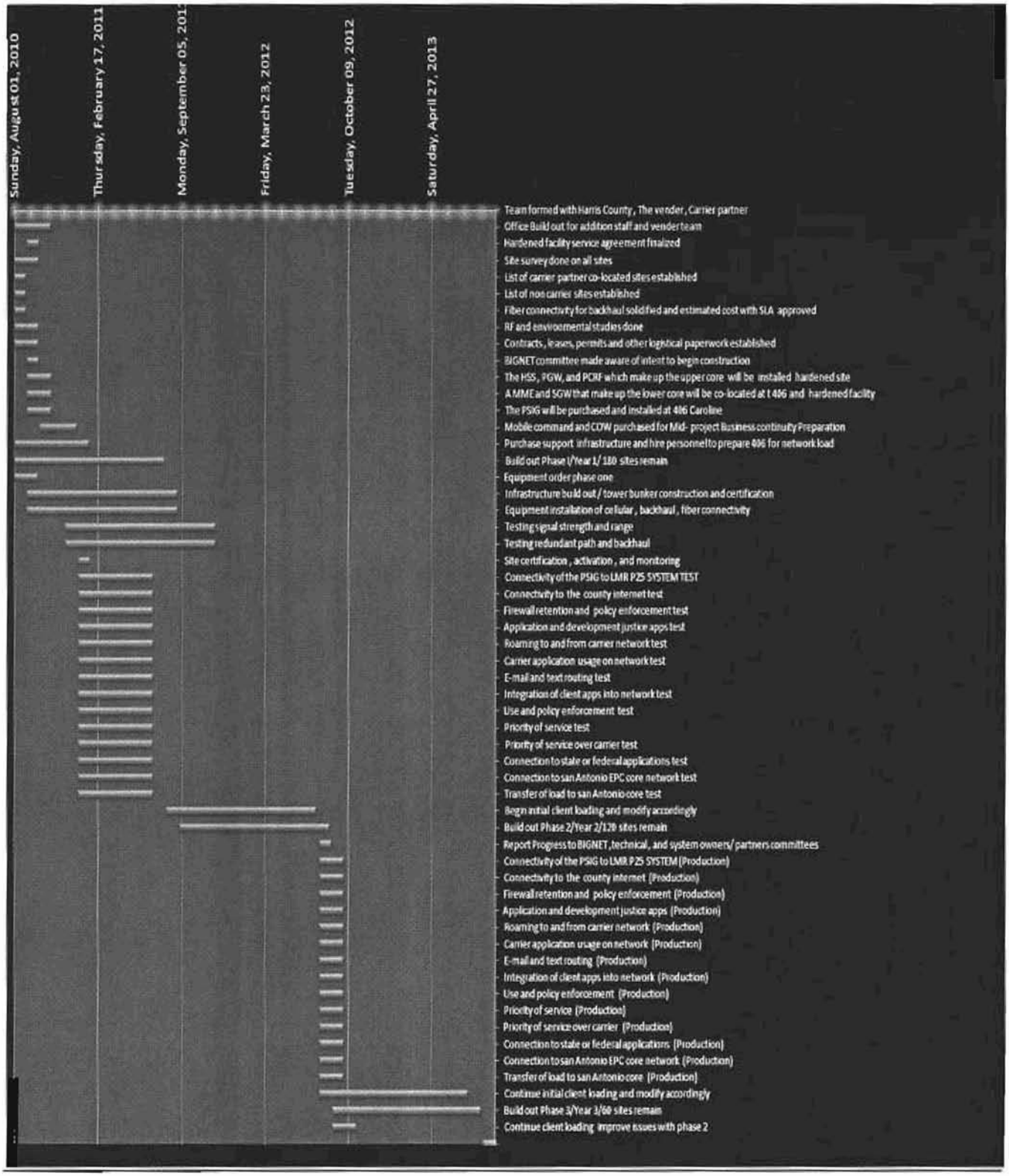

Interoperability Showing Response: Executive Summary

The Interoperability Showing Response addresses each interoperability component in the Broadband Public Safety solution, demonstrating how the Harris County (B.I.G.N.E.T)** network will achieve interoperability. This Executive Summary serves to provide an overview of the content in the formal Interoperability Showing Response. It is highly recommended the reader refer to the Interoperability Showing Technical and Operational Response for additional information on each of these topics.

System Architecture

The Broadband Public Safety solution is based on the 3GPP R8 standards, and consists of the Radio Access Network (RAN), the Evolved Packet Core (EPC), Devices, and the key interfaces exposed by these components. The solution includes the ability to roam between systems, provide priority access and QoS to ensure the most critical public safety users receive the highest priority, and ensure the Broadband Public Safety solution is secure.

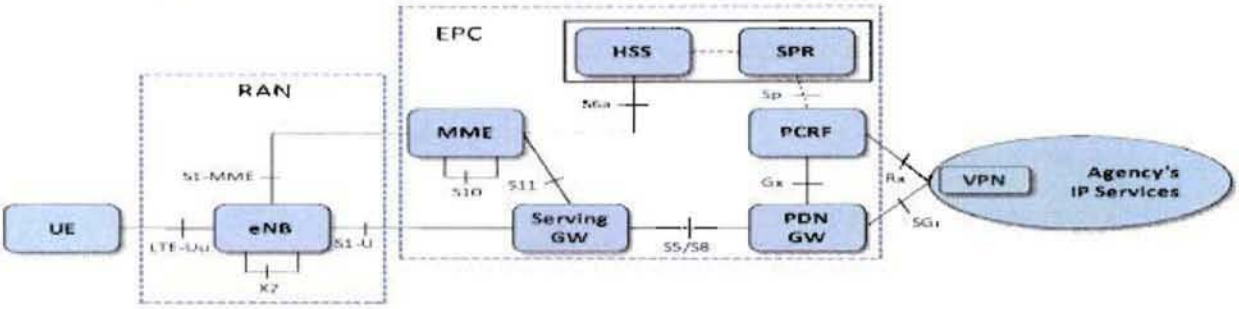

Radio Access Network (RAN) Architecture

The eNodeB (eNB) is the only 3GPP defined network element within the Evolved Universal Terrestrial Radio Access Network (EUTRAN) for 3GPP R8. The eNB provides the user plane and control plane protocol terminations toward the UE. The eNB consists of the inter-working function between the backhaul interface and the base band interface, the base band processing elements for the air interface, and the radios. The eNB in this system is built based on the 3GPP R8 standards. The eNB is designed for compatibility with 3GPP compliant UE's and utilizes 3GPP compliant network interfaces.

Core Network Architecture

The core network is based on the 3GPP R8 defined EPC (Evolved Packet Core) as mainly defined in 3GPP TS 23.401. The solution supports the MME, SGW, PGW, HSS and PCRF/SPR functions using standards defined network interfaces. A VPN element is also shown. This element supports a secure public safety VPN and can be used with alternate access technologies (WIFI, 3G).

Interfaces

The RAN/EPC solution supports the following interfaces based on 3GPP R8 compliance:

LTE-Uu, Gx, Gz, Rf/Ga, Rx, S1-MME, S1-U, S5, S6a, S8, S9, S10, S11, SGi, SP, X2.

Mobility and Handoff (Handover)

The mobility solution is fully compliant with 3GPP standards. It supports high-speed mobility and seamless handoffs between eNBs within the Broadband Network. Radio frequency phase shift acquisition up to 300 Hz Doppler is supported, which accommodates handoffs above 75 mph in a properly-engineered and functioning network.

The mobility solution will support inter-network handover between regional public safety networks. The approach taken to support inter-network handover between regional networks is dependent on several factors. These factors include:

- Frequency bands assigned to and shared between the regional networks
- PLMN ID's assigned to and shared between the regional networks
- Administrative relationships between the regional networks

In order to support inter-PLMN handover with 3GPP R8 specifications, coordinated network planning and operations across the PLMN ID domains is required. In order to support inter-PLMN handover across operational domains without operational coordination, 3GPP standards enhancements are required. MVPNs provide an alternative solution approach to inter-PLMN handover; the MVPN provides IP layer mobility and intelligent route selection which is independent of handover in the radio access layer. The Interoperability Showing Response outlines the inter-PLMN handover issues and approach supported in this solution.

Roaming

Intra-system roaming will be supported as needed by operational scenarios which require service across regional network boundaries. In addition to intra-system roaming, adjacent regional networks will also raise the need for inter-PLMN handover.

Inter-system roaming will be supported as needed by operational scenarios which cross regional network boundaries, and as allowed by roaming agreements with commercial carriers. Inter-system roaming may also require addition of Border Gateway routers to interconnect with a Roaming Service provider. The same 3GPP standards constraints apply to inter-PLMN handover across operational domains for inter-system roaming as for intra-system roaming. However, inter-system and inter-PLMN handover is more challenging due to the additional interfaces and operational dependencies between commercial carrier networks and the Shared Wireless Broadband Network (SWBN). The Interoperability Showing Response describes the solution approach to intra-system and inter-system roaming.

Priority Access and QoS

LTE offers the most advanced QoS capabilities of any commercial cellular technology; however the technology must be properly configured to meet the needs of public safety usage and to support roaming to carriers and other public safety regional systems. The Interoperability Showing Response describes how advanced priority access and QoS capabilities should be configured in order to maximize the interoperability benefits to public safety. These LTE configurations should be standardized across all public safety regional systems in order to facilitate nationwide interoperability.

A flexible priority access and QoS framework must be established which provides:

Regional Flexibility

Each public safety region should have flexibility to choose an LTE prioritization model to suit its need. For example, region 1 may prioritize responders based on role and region 2 may prioritize responders based on application. The region should have some latitude to choose how to prioritize devices and applications on the regional system.

Roaming Support

Whether roaming between regional systems or roaming to a commercial LTE system, the

Harris County (B.I.G.N.E.T)

prioritization framework should support a consistent and fair policy of mapping priority between systems.

The realization of the priority access/QoS framework is based on standardization of LTE configuration parameters for public safety use, such as ARP, QCI, GBR, and MBR. The Interoperability Showing Response outlines the specific configuration required for the solution.

Security

3GPP standards have defined a suite of security related specifications for LTE systems. From an interoperability perspective, of particular interest are the specifications 33.401 ("3GPP System Architecture Evolution (SAE); Security architecture"), 33.210 ("3G security; Network Domain Security (NDS); IP network layer security"), and 33.310 ("Network Domain Security/Authentication Framework (NDS/AF)"). We will fully support the requirements stated in these specifications to ensure secure inter-system interoperability. The Interoperability Showing Response provides additional information on the security mechanisms included in the solution.

Devices

Delivery of user devices for Public Safety broadband agencies will be driven by the availability of an LTE chipset that supports standard 3GPP baseband protocols and RF operation in the 10 MHz of Public Safety spectrum (763 MHz to 768 MHz lower and 793MHz to 798 MHz upper). All devices will adhere to the 3GPP Release 8 air interface specification and the recommended out of band emissions (OOBE) as specified in the waiver order, as well as existing OOBE requirements to protect Public Safety narrowband voice services in the 700MHz spectrum. The user devices intended for early deployment Public Safety LTE networks are USB-Dongles, Vehicle Modems, and Smartphones. The Interoperability Showing Response provides additional information on each of these device types.

Applications

The FCC has identified in the 10-79 order a list of minimum waiver applications potential waiver grantees must support. These applications provide the foundation for meaningful nationwide interoperability, and are explained in the Interoperability Showing Response.

Two key application technology areas for broadband public safety are internet access and a Status/Information Homepage (SIH)

The LTE system must be configured to provide Internet Access by first accessing the responder's home system (i.e. Internet/Intranet traffic is home-routed). Serving the Internet from a home APN lessens the need for additional APNs on the device. Each additional APN may imply the device connects to more and more network segments (and subsequently has multiple IP addresses); increasing security risks at the device. Therefore, home-routed Internet Access reduces the need for a "local APN" while roaming and improves security on the device.

Another key technology for LTE public safety will be the Status/Information Homepage (SIH). The SIH is envisioned to provide home and roaming responders with incident-specific information, alerts, system status, weather, traffic, and other information. This information may come from Computer-Aided Dispatch (CAD) terminals, responders, or in the future the NG911 ESInet.

Reliability and Availability

The solution provides for high reliability and high availability for the following network components:

- Regional Data Center and NOC
- LTE Enhanced Packet Core (EPC)

- Transport network
- Radio Access Network (RAN)
- Mobile and portable User Equipment

In order to maintain service availability, the network has been designed with multiple layers of redundancy and resiliency. The network can be deployed such that module failures, node failures, and even failure of an entire data center site will not degrade network service availability. The Regional Data Center and NOC can be deployed in a fully-redundant configuration, such that a catastrophic failure of a data center location will not result in the loss of critical functionality, since all operations and traffic can be served by an alternate data center.

The mobile and portable User Equipment (UE) devices are hardened in accordance with Public Safety best-practices. Generally, the eco-system for LTE 700 MHz broadband Public Safety UE's is still emerging. However, we expect that as the eco-system matures, a wide range of device capabilities will be available to Public Safety markets, spanning low-end commercial grade devices to high-end devices compliant with military-specifications.

The Interoperability Showing Response provides additional information on the reliability and availability aspects of the solution.

Radio Frequency (RF) Engineering

RF system performance factors such as coverage footprint, throughput, and capacity depend upon many different variables in RF design, including but not limited to the number of users, desired site density, system cost, traffic model, etc. As such, these variables are interrelated, so that changes in one variable inevitably impact the others. The Harris County (B.I.G.N.E.T) system is designed to support current users and applications in the most cost effective manner and the design is scalable for future expansion.

The Harris County (B.I.G.N.E.T) RAN design leverages extensive experience in modeling and designing wireless packet data networks, as well as extensive experience in RF propagation analysis. The coverage prediction tools used in this analysis follow a two step process. First, an initial RF propagation analysis of the service area is performed using known models such as Okumura with shadow loss and TSB-88 statistical methods to provide a highly reliable prediction of coverage performance. Second, the tool performs a discrete event Monte Carlo simulation to model the LTE system based on current and future requirements. This detailed simulation characterizes the system performance and interference analysis based on a particular number of users and a traffic model. Coverage maps are based on these simulation results, which depict coverage at certain performance levels.

LTE system capacity and coverage performance depend on interference levels; therefore, interference mitigation is a primary objective of the LTE RF system design. Several measures are taken during the system design phase to mitigate interference including selecting appropriate antenna patterns, adjusting the individual sector antenna tilts, and selecting optimal site locations and site separation distances. Site separation, antenna down-tilt, along with eNB features like static and semi-static inter-cell interference coordination (ICIC) are key elements towards minimizing intra-band interference levels. OFDM systems like LTE can also take advantage of frequency diversity and frequency selectivity gain via scheduler algorithms to further minimize intra-band interference.

Testing

Testing validates key functionality, performance and interoperability requirements of the PS LTE solution. This interoperability testing is in addition to the extensive testing performed by the solution provider in their internal laboratories to ensure conformance of their LTE solution to 3GPP standards. An outline of this testing can be provided by our solutions provider. We as a pending Waiver Recipient are also planning to participate in the PSCR/DC demonstration

network, starting in 2010. In order to meet the requirement of the Waiver Order, a trial activity will be planned using our selected PS LTE solution. This trial activity will constitute and form the basis for initial testing of the system. The Interoperability Showing Response provides an overview of the trial activities (initial testing), and descriptions of the tests to be performed.

Deployment

Deployment of our LTE network will fall under the following deployment schedule. This is further outlined in the Interoperability showing. In addition to the schedule bellow we would like to mention new partnership potentials like the state of Louisiana this partnership could lead to our ultimate goal which is public safety broadband collaboration and connectivity for the Gulf Coast.

- Pre-Build out schedule 9/1/2010 - 1/28/2011
    a. In this stage we plan to solidify contracts, site locations, permits, workforce, support technology infrastructure, and agreements.
- Build out Schedule Phase 1 /year 1
  (60 sites per year - 5 per month - 180 remain)
  9/1/2010- 9/1/2011
    a. In this stage we will begin construction of our infrastructure
    b. Locate the core in a hardened facility
    c. Begin backhaul connectivity
    d. Establish monitoring and support infrastructure
    e. Begin testing and loading
- Interoperability connection and development 1/1/2011 – 6/30/2011
    a. In this stage we incorporate the options of the carrier partnerships and the corresponding services
    b. We also explore application and LMR connectivity
- Build out Schedule phase 2/year 2
  (60 sites per year - 5 per month-120 remain)
  9/1/2011 – 9/1/2012
- Interoperability connection and development – online 8/30/2012 – 9/30/2012
- Build out Schedule phase 3/year 3
  (60 sites per year - 5 per month-60 remain)
  9/1/2012 – 9/1/2013

Operations, Administration and Maintenance

The OA&M solution is comprehensive and standards-based. It encompasses the entire lifecycle, including system design, assembly and staging, installation and commissioning, operations, optimization, and billing. The operations solution includes Fault Management, Configuration Management, Accounting Management, and Performance Management (FCAPS) support for the system infrastructure and devices, as well as the advanced capabilities such as NMS, Over the Air Device Management, Self Organizing Network, Integrated Subscriber Provisioning, and an Integrated Billing solution. The full paper describes the OA&M capabilities.

The OA&M solution requires interoperability coordination of vendor SON algorithms, subscriber provisioning, and device management. The Interoperability Showing Response provides additional details on these points of interoperability within OA&M.

**Note : Public safety entities in 28 Counties and two frequency collaboration regions , make up the Broadband Interoperability Gateway Network East Texas or (BIGNET).