COALITION FOR 4G IN AMERICA

September 20, 2010

Via Electronic Filing

Marlene H. Dortch
Secretary
Federal Communications Commission
445 Twelfth Street, S.W.
Washington, DC 20554

Re: WT Docket No. 06-150; PS Docket No. 06-229; GN Docket No. 09-51
Written *Ex Parte* Presentation

Dear Ms. Dortch:

The Coalition for 4G in America – comprised of Rural Cellular Association, the Rural Telecommunications Group, Inc., Sprint Nextel Corporation, T-Mobile USA, Inc., MetroPCS Communications, Inc., Cellular South, Inc., Access Spectrum, LLC and Xanadoo Company – supports promoting interoperability across the entire 700 MHz Band to ensure the development of a multiband commercial and public safety device ecosystem. To achieve this important public interest objective, the undersigned parties support the establishment of a band class ("Band Class 12") for all paired bands in the Lower 700 MHz block and another band class for the Upper 700 MHz block.[1]

Some parties have raised interference concerns regarding the establishment of an interoperable Band Class 12.[2] These concerns, however, are misguided and fail to take into account Long Term Evolution ("LTE") system deployment techniques and interference management mechanisms. As explained in the attached paper entitled *Lower 700 MHz Interference Management*, prepared by Doug Hyslop and Chris Helzer of Wireless Strategy, LLC, licensees can deploy Band Class 12 devices without causing harmful interference by simply following 3GPP specifications and commonplace engineering techniques.

---

[1] *See* Letter from Mark Stachiw, MetroPCS Communications, Inc., Lawrence Krevor, Sprint Nextel Corp., Thomas Sugrue, T-Mobile USA, Inc., Michael Gottdenker, Access Spectrum, LLC, Marshal Pagon, Xanadoo Company, Caressa Bennet, Rural Telecommunications Group, Craig Viehweg, Triad 700, LLC, Grant Spellmeyer, United States Cellular Corp., Steven Berry, Rural Cellular Association, and Eric Graham, Cellular South, Inc., to Marlene Dortch, FCC Secretary, WT Docket No. 06-150 (May 10, 2010).

[2] Letter from Joseph P. Marx, AT&T, Inc., to Marlene Dortch, FCC Secretary, WT Docket No. 06-150 (June 3, 2010).

The Wireless Strategy analysis first provides an overview of the main interference mechanisms influencing device performance in wireless communications systems. The analysis then demonstrates the following:

- ***Channel 51 Protection.*** There is no evidence in the record establishing that Band Class 12 presents any greater risk of interference to Channel 51 digital television receivers than Band Class 17. To the contrary, under 3GPP specifications, the emissions masks for *both* Band Class 12 and Band Class 17 exceed the out-of-band emissions limits specified in the Commission's rules. There is no need for a Band Class 17 filter versus a Band Class 12 filter to protect Channel 51 receivers from Lower 700 MHz B and C Block out-of-band emissions.

- ***Intermodulation Interference.*** Band Class 12 devices will not result in harmful reverse power amplifier intermodulation interference to Lower 700 MHz B and C Block devices from Channel 51 broadcast transmissions. Such interference is unlikely to occur for a variety of reasons. In the unlikely event it does occur, it can easily be eliminated by installing an LTE base station within a few hundred meters of the Channel 51 transmitter. The same interference mechanism is theoretically presented by operations in the Lower 700 MHz B and D Blocks under Band Class 17, yet licensees in those blocks have expressed no concerns about reverse intermodulation interference. Band Class 12 similarly presents no concerns regarding such interference.

- ***Lower 700 MHz Device Receive Blocks.*** The high-power transmissions in the Lower 700 MHz D and E blocks will not present an unmanageable interference risk for Band Class 12 devices. The Lower 700 MHz D Block will not present a receiver blocking interference challenge because the lower D Block transmission will undergo significant attenuation through the specified filtering and duplexer performance of Band Class 12 devices. Moreover, Lower 700 MHz B and C Block licensees can easily manage any interference risk from Lower 700 MHz E Block transmissions by locating an LTE base station within 500 meters of the E Block transmission tower.

The Wireless Strategy analysis demonstrates that Band Class 12 devices will fully comply with 3GPP LTE performance criteria and can be deployed without imposing any harmful or burdensome interference concerns on licensees. The Coalition for 4G in America urges the Commission to establish an interoperable Band Class 12 for the Lower 700 MHz Band as well as a single band class for the Upper 700 MHz band to promote interoperability throughout the band. All commercial devices that operate in the paired 700 MHz blocks should be required to support communications in all paired 700 MHz broadband blocks. The Coalition also reiterates its support for an auction of the Upper 700 MHz D Block for commercial use, as well as Commission action to combine the Upper A and D Blocks to create a 2 x 6 MHz block, with appropriate compensation provided to incumbent A Block licensees. These steps will maximize the efficient use of this valuable spectrum, benefit consumers by promoting competitive entry

into the 700 MHz Band, and promote the Commission's plan to establish a nationwide, interoperable public safety broadband network.

Respectfully submitted,

/s/ Lawrence R. Krevor
Lawrence R. Krevor
Vice President, Spectrum
Sprint Nextel Corporation
900 7th Street NW, Suite 700
Washington, DC 20001

/s/ Thomas J. Sugrue
Thomas J. Sugrue
Vice President, Government Affairs
T-Mobile USA, Inc.
401 9th Street NW, Suite 550
Washington, DC 20004

/s/ Caressa D. Bennet
Caressa D. Bennet
General Counsel
Rural Telecommunications Group, Inc.
10 G Street NE, Suite 710
Washington, DC 20002

/s/ Steven K. Berry
Steven K. Berry
President & CEO
Rural Cellular Association
805 15th Street NW, Suite 401
Washington, DC 20005

/s/ Mark A. Stachiw
Mark A. Stachiw
Executive Vice President,
General Counsel and Secretary
MetroPCS Communications, Inc.
2250 Lakeside Boulevard
Richardson, TX 75082

/s/ Eric B. Graham
Eric B. Graham
Vice President, Strategic and
Government Relations
Cellular South, Inc.
1018 Highland Colony Parkway, Suite 300
Ridgeland, MS 39157

/s/ Michael I. Gottdenker
Michael I. Gottdenker
Chairman and CEO
Access Spectrum, LLC
3 Bethesda Metro Center, Suite 500
Bethesda, MD 20814

/s/ Marshall W. Pagon
Marshall W. Pagon
Chairman and CEO
Xanadoo Company
225 City Avenue, Suite 200
Bala Cynwyd, PA 19004

cc: James A. Barnett, Jr.
Stuart Benjamin
Jeff Cohen
Paul de Sa
Monica Desai
Jennifer Flynn
David Furth
Angela Giancarlo
John Giusti
Jeff Goldthorp
Nese Guendelsberger
Rick Kaplan
Julius Knapp
Evan R. Kwerel
John Leibovitz
Jennifer Manner
Charles Mathias
Nicole McGinnis
Ruth Milkman
Paul Murray
Louis Peraertz
Tom Peters
Susan Singer
James Schlichting
Joel Taubenblatt
Peter Trachtenberg
Margaret Wiener

Lower 700 MHz Interference Management

September 10, 2010

wireless strategy

the business of wireless technology

Doug Hyslop
Chris Helzer

Wireless Strategy, LLC
PO Box 3353
Reston, VA 20195

www.wirelessstrategy.com

Table of Contents

I. Introduction 3

II. Wireless Device Interference 4

III. Channel 51 Protection 9

IV. Device Reverse PA Intermodulation 10

V. Lower 700 MHz Device Receive Blocks 13

VI. Conclusions 18

I. Introduction

In AT&T's ex parte response[1] to our first paper on the 700 MHz band[2], AT&T inaccurately portrays LTE system deployment techniques and interference management mechanisms. To correct the record, we respectfully submit "Lower 700 MHz Interference Management" to explain the interference mechanisms which may be encountered in the lower 700 MHz band. The analyses contained herein demonstrate how the 3GPP specifications, in combination with commonplace engineering techniques, are more than sufficient to eliminate the lower 700 MHz interference concerns while supporting the Band 12 filtering approach in the LTE devices.

To introduce the technical concepts, Section II provides an overview of the main interference mechanisms influencing device performance in wireless systems. We describe the typical circumstances under which interference may occur, and explain the standard industry approaches to mitigating or eliminating the interference.

In later sections, we explain the lower 700 MHz interference concerns raised by opponents of Band 12. Section III describes the interference mechanisms relevant to DTV Channel 51 reception, which is the block adjacent to the lower end of Band Class 12. Section IV describes the reverse power amplifier intermodulation issue first raised by Motorola within 3GPP. Section V describes the interference mechanisms and mitigation methods relevant in the device receive portion of the lower band, especially as related to the high-power lower D and E blocks. Throughout the paper, each 700 MHz interference case is stated, along with a technical explanation of the factors behind the interference, the practical deployment considerations related to each case, and if necessary, the common procedures employed by RF engineers in the system design process to eliminate inter-system interference.

It is worthwhile to note that base station filtering can and should be block-specific. In PCS and other spectrum bands, each base station is planned to operate in one block out of many possible blocks. The base station filtering is tailored for the block(s) of operation to provide better protection to/from neighboring systems. The major base station costs are in power amplifiers and other elements which can be scaled across a range of blocks; the filtering, as a separate base station component, is easily tailored for a particular block. Therefore, our discussion of Band 12 versus Band 17 only applies to the LTE devices. Fragmentation of device volume among sub-bands increases the number of unique products required by the marketplace, reducing scale, and is unnecessary from a technical point of view. Therefore, the device should be designed to support the full 3GPP band of operation.

---

[1] Letter from AT&T to Marlene H. Dortch (FCC), WT Docket No. 06-150; PS Docket No. 06-229; GN Docket No. 09-51; RM Docket No. 11592 (dated June 3, 2010).

[2] Doug Hyslop & Chris Helzer, *Wireless Strategy 700 MHz Band Analysis* (May 6, 2010) ("*700 MHz Band Analysis*"), available in Coalition for 4G in America, Written Ex Parte Presentation, WT Docket No. 06-150; PS Docket No. 06-229; GN Docket No. 09-51; RM Docket No. 11592 (May 27, 2010).

As demonstrated herein, the 3GPP Band 12 device performance will meet or exceed 3GPP performance criteria in practical deployment conditions. The high power Channel 51 and lower D/E broadcast signals will not degrade lower B/C Band 12 device performance in a properly designed LTE system. The interference claims raised by opponents of Band 12 are easily managed through standard RF engineering practices.

II. Wireless Device Interference

In a cellular-like wireless system where thousands of cell sites are deployed, the wireless system specifications and deployment approach must carefully consider potential intra- and inter-system interference. Wireless devices encounter unique challenges because the devices are often mobile, and thus experience a wider range of RF environments relative to that of fixed base stations. Three interference mechanisms which may impact a wireless device are receiver blocking, out-of-band emissions (OOBE), and intermodulation. The causes, impacts, and mitigation measures for each mechanism are explained below.

Receiver Blocking

Receiver blocking, or overload, occurs when a sufficiently strong signal in a nearby channel appears at the receiver of a victim device when the desired signal is weak, as shown in Figure 1. When receiving a weak desired signal, the device increases its front-end gain to maximize signal reception. The additional amplification improves the device sensitivity, but the front end also amplifies the strong interfering signal. If the interfering signal is sufficiently strong, then receiver performance may degrade.

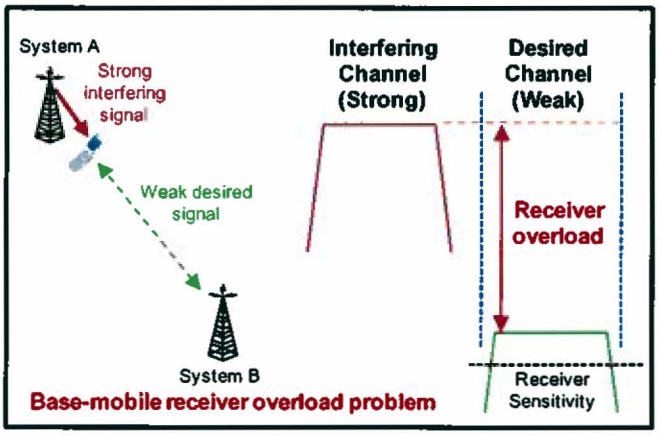

Figure 1: Base-to-Mobile Receiver Blocking Problem

The converse is also true – when the desired signal is strong, then the device front-end gain is reduced, and the device is less susceptible to nearby strong interfering signals. Receiver blocking can be successfully mitigated by providing a stronger desired signal in the vicinity of strong interfering signals.

Figure 2: Exemplary near-far receiver overload interference to a device

Figure 2 provides an illustration of how receiver blocking may impact a device operating near the edge of its serving base station's coverage range but close to the interfering base station. This is the classic near-far interference case where base stations may interfere with device reception, a base-to-mobile interference issue. Similarly, if a device transmit block is near a device receive block then a mobile-to-mobile receiver overload case may result. The approach to dealing with receiver blocking depends on whether the interference is mobile-to-mobile or base-to-mobile.

With mobile-to-mobile blocking interference, the separation distance between the victim and interfering devices is not easily controlled – two people each using a cellular phone may stand close together. Thus the coupling loss, or radio signal attenuation as a function of distance, between the two devices may be less than that between a base station and a device. The frequency separation and device filter performance are especially important in the mobile-to-mobile scenario. Frequencies close to the desired signal undergo less attenuation by the device filter. The amount of frequency separation required to adequately protect the device receiver depends on the device filter response curve and the receiver design, which dictates the receiver blocking level. The receiver blocking level defines the maximum interfering signal strength tolerable by the victim receiver when operating near the minimum receiver sensitivity.

With a base-to-mobile interference scenario as shown in Figure 2, additional mechanisms are available to effectively manage the interference. One such approach, described in the first Wireless Strategy white paper, is base station near-location, which is the practice of placing a base station of the victim system in the vicinity of the interfering system's base station. When the interfering base station is a high-site broadcast tower, only one or two locations per city must be considered. Near-location in this situation is straightforward - not impossible to implement as AT&T inaccurately claims[3]. The near-location approach simply requires the proper planning of one site, already in the operator's build plan for

[3] AT&T June 3 at 4.

coverage, to be deployed somewhat close to the offending base station such that a sufficiently strong desired signal is available in the vicinity of the interfering base station. Base station near-location to potential base-to-mobile interferers is a basic RF engineering technique widely used in the industry. Figure 3 illustrates how a stronger desired signal overcomes the receiver blocking problem.

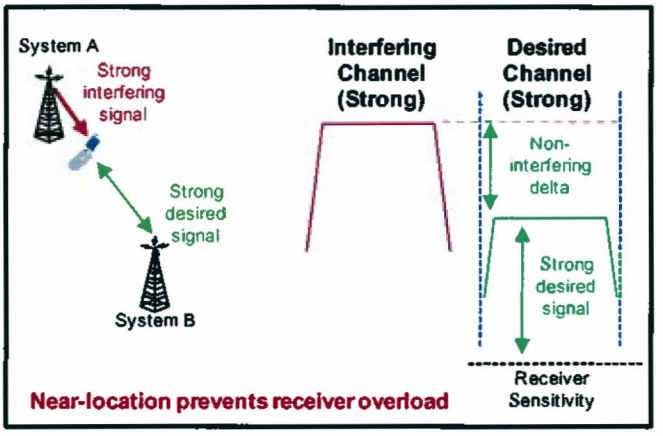

Figure 3: Near-location of Base Stations Prevents Device Overload

Figure 4 illustrates the system view of locating one base station closer to the interfering source, and eliminating the small circle of near-far interference. By providing a desired signal level which is sufficiently stronger than the minimum receiver sensitivity of the device, the interfering signal's impact to the receiver is eliminated.

Figure 4: Deployment of a desired site near the interferer eliminates the receiver blocking region

Out-of-band Emissions

The second interference mechanism which may impact device performance is out-of-band emissions. A wireless transmitter places most of the energy within the desired transmission bandwidth, but some of the energy is transmitted in the neighboring frequencies. These transmissions in nearby frequencies are unwanted and termed out-of-band emissions (OOBE). The OOBE levels generally decrease with frequency separation, and are further attenuated by transmitter filtering. Interference from OOBE is received directly within the desired channel and cannot be filtered out by the receiver, as shown in Figure 5. Therefore, the impact of OOBE to a device receiver is solely determined by the interfering transmitter filtering and power level, and does not depend on the receiving device's duplexer performance.

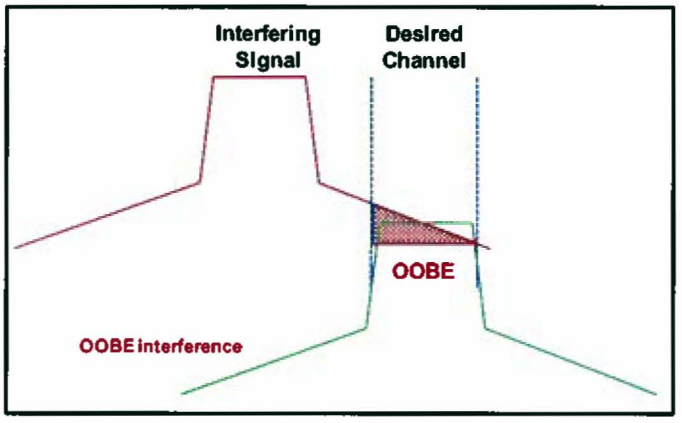

Figure 5: OOBE Interference Mechanism

To comply with regulatory guidelines for OOBE, the interfering transmitter must ensure the emissions level into the victim receiver's pass band is low. The FCC rules managing OOBE specify the conducted power level at the edge of the victim receive band, providing flexibility for the interferer to mitigate the interference through either transmit power reduction or more stringent transmit filtering. If regulatory conditions are met but interference remains a concern, physical separation can be an effective technique. Physical separation reduces OOBE by controlling the minimum coupling loss between the interferer and the victim. When the interference mechanism is base-to-mobile as with a broadcast tower interferer, the victim operator has the further option of base station placement to eliminate the impact of the OOBE. Increasing the desired signal strength within the area affected by OOBE effectively overcomes the interference, as shown in Figure 6.

Once again, the OOBE impact to a device receiver is independent of the duplexer filtering employed by the device. OOBE is a transmitter issue which must be handled by the mechanisms described above.

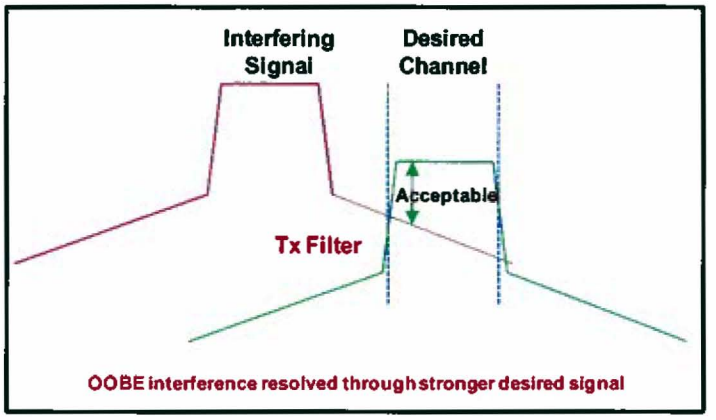

Figure 6: Management of OOBE Interference

Intermodulation Interference

Intermodulation interference occurs when two or more transmit signals mix and create products on new frequencies. For example, transmit frequencies x and y may mix and create the following third order intermodulation products: 2x+y, 2x-y, 2y+x, 2y-x. If the intermodulation products are of sufficient signal strength and fall on a desired receive frequency, then the resulting interference may disrupt communications.

Three main conditions must exist for intermodulation problems to occur:

1. Transmissions must exist on the right mix of frequencies to develop an intermodulation product on a receive frequency
2. The mixing signals must be of sufficient strength such that the resulting intermodulation products are strong enough to disrupt communications
3. A system non-linearity must exist, such as a component operating in a non-linear region, to produce the intermodulation product.

The mitigation approach followed for intermodulation problems depends on the nature of the intermodulation. Where practical, the frequencies mixing together may be isolated or filtered to reduce interaction. Power reductions of one or both signals will reduce the strength of the intermodulation product, decreasing the impact of any interference. Sources of system non-linearity may also be addressed, such as rust-covered metallic structures or wireless equipment components operating in a non-linear region.

III. Channel 51 Protection

The lower bound of the 3GPP Band 12 mobile transmit section is at 698 MHz, forming a border with the digital television channel 51 as shown in Figure 7. The lower A block interference situation relative to channel 51 was covered in the May 2010 Wireless Strategy paper[4]. As for the lower B and C mobile transmit blocks, the potential causes of interference from these blocks to channel 51 include receiver overload and OOBE.

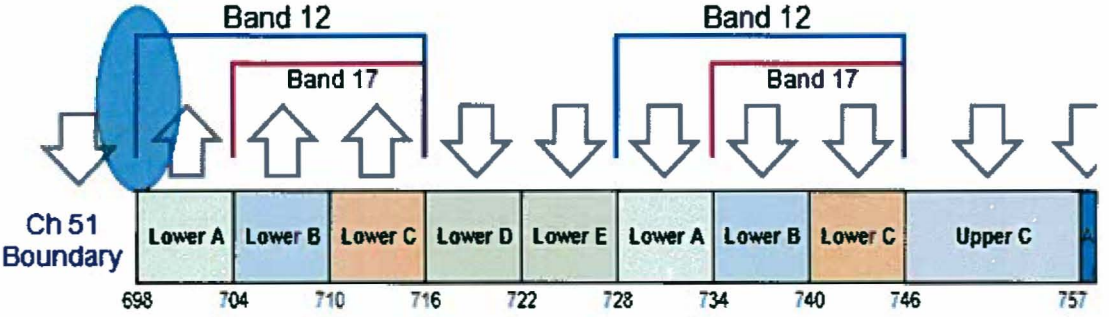

Figure 7: Lower 700 MHz Boundary with DTV Ch 51

We will first examine DTV receiver blocking. The potential for blocking a DTV receiver would require a lower B or C block device to be transmitting at high power near a DTV receiver tuned to Channel 51 and operating near its coverage reception limit. The FCC rules do not require a transmit power reduction within the B or C blocks when within the coverage contour of a DTV channel 51 station[5]. Moreover, the mechanism of receiver blocking depends on the device receiver filter, not the interfering transmitter filter. A tighter device transmitter filter, such as that offered by Band 17, does not reduce the lower B or C block in-band transmit power and therefore does not mitigate a receiver overload problem to channel 51 receivers. In terms of receiver blocking, there is no benefit from tightening the LTE device duplexer transmit filter more than band 12 because the LTE device transmitter filter plays no role in this interference mechanism.

Any Channel 51 receiver blocking concerns would be addressed by tightening the filter of the DTV receiver, or by reducing the transmit power of the device operating in the lower B or C blocks. These measures do not impact the lower 700 MHz device duplexer selection. A lower B or C block transmission passing through a Band 12 or Band 17 duplexer will deliver the same power, from a blocking perspective, to the channel 51 receiver.

---

[4] Ib. at 8.

[5] 47CFR 27.60 (b) (2) (ii) (D) "(e.g., a base station may be operating within TV Channel 62 and the mobiles within TV Channel 67, in which case the TV channels 61, 62, 63, 66, 67, and 68 must be protected)." The regulations do not specify further protection to second-adjacent channel 64, for instance. Therefore, the lower B and C blocks, being the second- and third-adjacent channels to DTV Channel 51, are not required to mitigate transmit power within the Channel 51 service contour.

The second interference mechanism potentially impacting the Channel 51 receiver is OOBE. The FCC regulations for the OOBE levels applicable to the lower B and C blocks are for an attenuation of 43 + 10 log P in a 100 kHz bandwidth[6], which is equivalent to -3 dBm/MHz at 1 MHz separation from the transmit carrier. The 3GPP LTE specifications for both Band 12 and Band 17 are for 65 + 10 log P in a 6.25 kHz bandwidth, which translates to -13 dBm/MHz with 1 MHz or more carrier separation[7]. Thus, both Band 12 and Band 17 emission masks exceed the FCC rules for OOBE. As noted in the Wireless Strategy paper "700 MHz Upper Band Analysis"[8], the duplexer filter plays no role in meeting this tightened OOBE level. The LTE transmit chain complies without assistance from the duplexer.

No technical evidence has been submitted to the Commission demonstrating a need for more stringent guidelines to protect DTV receivers. Since the 3GPP LTE specifications require the transmit chain to perform better than the FCC OOBE rules, and the transmit filter plays no role in receiver blocking, there is no demonstrated need for the tighter Band 17 filter to protect channel 51 receivers from lower B and C block transmissions.

IV. Device Reverse PA Intermodulation

In Motorola's 3GPP submission discussing the need for a sub-band in the lower 700 MHz band[9], Motorola claimed that Band 12 devices, by virtue of their wider filter, could produce reverse power amplifier intermodulation if the device were to use lower B and C blocks near Channel 51 broadcast towers. The mechanism that Motorola suggests may occur is a strong Channel 51 transmission entering the device antenna, passing through the device duplexer with some attenuation, and mixing with a strong lower B or C block transmission in the device power amplifier. Any resulting intermodulation products would theoretically re-radiate out through the device duplexer, undergo attenuation by the transmit filter, and then cross over to the receiver, potentially causing interference if the receiver is tuned to the channel affected by the intermodulation product.

A brief examination of the intermodulation products relating to Channel 51 and the lower B and C blocks shows the frequencies where mixed products could occur. The relevant intermodulation mix is twice the higher frequency minus the lower frequency. For example, device transmissions in the lower B block mixing with channel 51 may theoretically produce intermodulation products from 710 to 728 MHz,

---

[6] 47CFR 27.53.

[7] 3GPP TS 36.101 v9.3.0 (2010-03), Table 6.6.2.2.3-1: Additional requirements, signaled value NS-06, p. 36.

[8] Doug Hyslop & Chris Helzer, Wireless Strategy 700 MHz Upper Band Analysis, at 12, (July 19, 2010), available in the filing by Sprint Nextel Corporation, T-Mobile USA Inc., United States Cellular Corporation, Clearwire Corporation, the Rural Cellular Association, the Rural Telecommunications Group, Inc., Access Spectrum, LLC and Xanadoo Company, dated July 19, 2010.

[9] R4-081108 3GPP TSG RAN WG4 (Radio) Meeting #47, "TS36.101: Lower 700 MHz Band 15", agenda item 6.1.2, April 2008. The proposal was originally referred to as band 15 and later modified to become band 17.

depending on the number of LTE resource blocks in use within the lower B block. These frequencies do not fall within the Band 12 device receive passband. Indeed, the only Band 12 device transmit frequencies which may pose an intermodulation concern would be a lower C block device transmission mixing with channel 51, producing frequencies which could fall within the lower A and B device receive blocks, as shown in Figure 8.

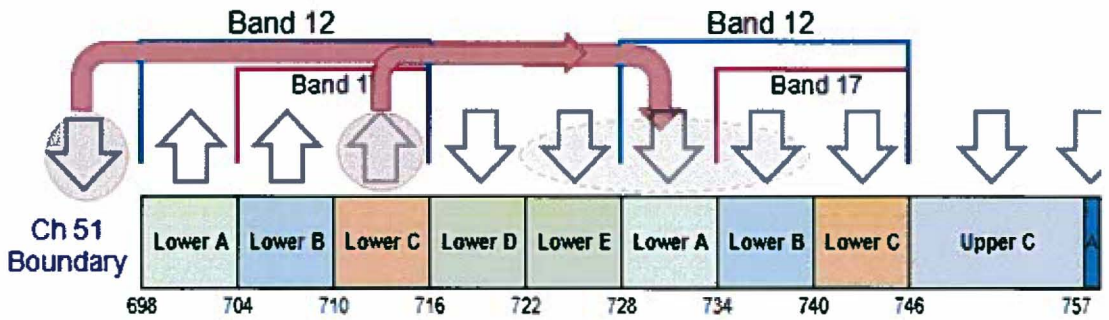

Figure 8: Reverse PA Intermodulation

For 5 MHz LTE systems, such a scenario would not cause self-interference, as the intermodulation products would never fall within the device receive block paired with the device transmission. For 10 MHz LTE systems, device transmissions within the C block could theoretically interfere with the same device receiving the lower B block frequencies, if the LTE scheduler were to make such an allocation, an unlikely event when the device is transmitting at high power. LTE uplink transmissions use fewer resource blocks, meaning less spectrum, when signal conditions are poor and device transmit power is high, in order to maximize coverage reception. Nevertheless, to ensure the 10 MHz uplink transmission case is protected, further analysis is provided to demonstrate that engineering practices may sufficiently manage this unlikely interference case.

As described in section II, in order for intermodulation to occur, a nonlinear element must be present, and the magnitudes of the mixing signals must be strong enough to cause interference to a receiver. While the Channel 51 transmission is strong near its broadcast tower, the lower C block device transmit signal level may be controlled by placing an LTE base station in proximity to the channel 51 tower. When the LTE device is near its serving base station, the device power control algorithm reduces the device transmit power significantly. In this situation, the interference-reduction benefits from device power control are two-fold. First, the lower LTE transmit power reduces the magnitude of any intermodulation products which may occur, lessening the likelihood of intermodulation interference. Second, as the device input power decreases, the device power amplifier operates in a highly stable linear region. Intermodulation typically occurs in nonlinear elements. Power amplifiers operating near the rated maximum power are close to the nonlinear region and are more likely to produce reverse intermodulation. Simply by designing the LTE system such that an LTE base station is somewhat near the channel 51 tower, the device transmit power is reduced to a considerably lower level and the amplifier operates in the linear region, mitigating the probability of intermodulation production.

This near-location practice reduces the probability and magnitude of any intermodulation products. Furthermore, near-location increases the desired downlink signal strength in the areas where the interference is strong, eliminating the impacts of any intermodulation products. For instance, if an intermodulation product is generated in the power amplifier, the interfering signal would traverse the duplexer and undergo the transmitter filter attenuation of 50 to 60 dB. Any remaining signal making its way to the receiver will not cause interference if the desired downlink signal is much stronger than this low-level intermodulation interferer. The proximity of the LTE base station would provide such a strong downlink signal, and avoid any intermodulation interference.

In order to prevent reverse PA intermodulation as related to channel 51, the level of protection required from device power control may be easily calculated, through comparison with a similar reverse PA intermodulation issue with the lower D and B blocks. Interestingly, the Band 12 opponents have not flagged the D/B issue as a situation requiring significant guard band or unusual filtering. Regardless, the analogous situation is as follows: Bands 12 and 17 share the same boundary at 716 MHz with the adjacent lower D block, licensed for high-power base station transmissions. The lower D block base station broadcast transmissions could mix with lower B block device transmissions through the same reverse PA intermodulation problem raised by Motorola for channel 51, creating intermodulation products ranging from 722 to 740 MHz, as shown in Figure 9. This issue is more severe than the channel 51 case because the intermodulation of the B and D channels creates products on the lower B block device receive frequency, causing self-interference for both the 5 and 10 MHz carrier sizes. In other words, *the paired B transmit block interferes with its own receive block.* In spite of this notable issue, AT&T does not plan to coordinate their LTE base station installations with the adjacent lower D block operators[10]. Therefore, the AT&T devices must be capable of adequate operation under any potential reverse PA intermodulation between the lower B and D channels, including cases where the LTE device is transmitting near its maximum power when close to a D block broadcast tower.

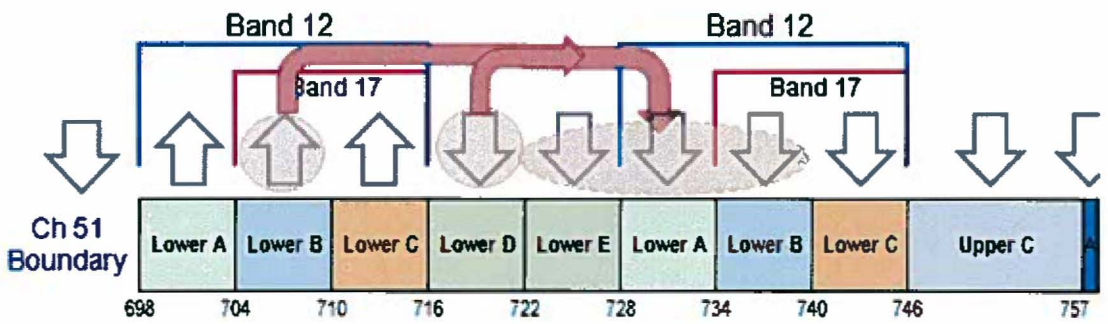

Figure 9: Lower B and D Block Reverse PA Intermodulation Self-Interference

Next, we will compare this notable potential for reverse PA intermodulation to the case proposed by Motorola involving channel 51. Since the device can handle the D/B block border successfully without coordination, then we simply need to determine any differences between this case and the channel 51 case. The only potential difference is the higher transmit power allowed for the channel 51 DTV

[10] AT&T June 3 at 6, "Coordinating base station placement… approaches a practical impossibility."

station of 1 MW versus the ERP for the D block of 50 kW, a 13 dB difference in power. Therefore, Motorola's reverse PA intermodulation concern involving channel 51 may be completely eliminated by ensuring that at least 13 dB of power control is applied when devices are in very close proximity to the Channel 51 tower. The device transmit power reduction lowers the power level of any intermodulation products, replicating the powers involved in the B/D boundary. From an RF system design perspective, this relatively small amount of power control can be achieved by installing one LTE B/C block base station within a few hundred meters of a channel 51 transmitter. Since there are few channel 51 transmitters nationwide, and a large number of LTE base stations deployed within a particular city, the RF system design may easily be modified to accommodate such a modest RF consideration as ensuring one of the sites is reasonably close to a DTV broadcast tower. This does not require a new site installation, but rather simply requires planning one of the to-be-deployed sites such that it is within a few hundred meters of the broadcast tower.

In summary, the channel 51 reverse PA intermodulation issue raised by Motorola within 3GPP will not create intermodulation products on the paired 6+6 MHz blocks within the lower 700 MHz band. Further indication that this reverse PA intermodulation issue is not a valid concern is evident by the lack of industry concern regarding the lower B and lower D blocks mixing through the same mechanism. Although the intermodulation products in this case would interfere with the same paired block (lower B), no unusual band classes are being pursued to use the lower C device transmit block as guard band to protect the lower B block reception. Indeed, in Motorola's 3GPP filing where the channel 51 reverse PA intermodulation issue is first raised, Motorola admits that "the magnitude of this problem is a function of the operator's deployment scenario."[11] In other words, in the unlikely event that an intermodulation problem with Channel 51 may exist, the operator may install one LTE base station within a few hundred meters of the channel 51 transmitter to eliminate the concern.

V. Lower 700 MHz Device Receive Blocks

The band 12 device receive blocks, from 728 to 746 MHz, are adjacent to the lower D and E high-power broadcast blocks as shown in figure 10. The lower D and E blocks are authorized to transmit at 50 kW ERP, 20 dB more power than a typical cellular-like base station ERP of 500 W. AT&T claims[12] that this higher power level may cause interference to the lower B and C device receive blocks. As demonstrated below, the higher power level of these blocks will not cause unusual interference conditions, if a minimal effort is made in proper RF system design.

[11] R4-081108 3GPP TSG RAN WG4 (Radio) Meeting #47, "TS36.101: Lower 700 MHz Band 15", agenda item 6.1.2, April 2008, p. 2.

[12] Ex parte by AT&T, WT Docket No. 06-150; PS Docket No. 06-229; GN Docket No. 09-51; RM Docket No. 11592 (dated May 28, 2010), p. 5.

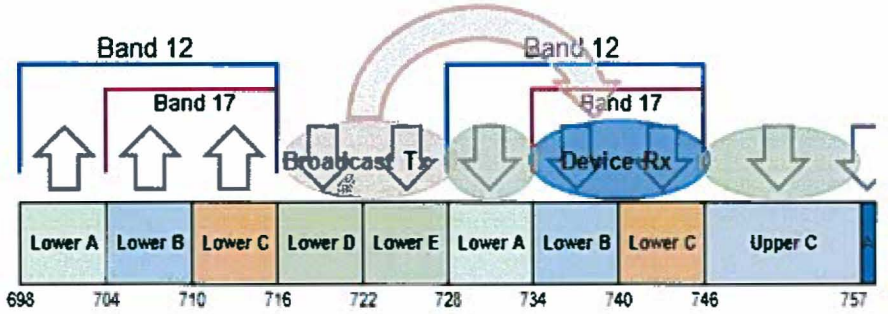

Figure 10: Band 12 Device Receive Blocks

We demonstrate below that the lower D block does not present a receiver overload concern to either Band 12 or Band 17 devices based on the frequency separation from the receive blocks and reasonable duplexer performance. Further, we note that the lower E block, newly auctioned in 2008 and not yet widely deployed, presents a receiver blocking situation not markedly different from the adjacent lower A block and upper C block base stations. The analysis demonstrates that device performance will fall well within 3GPP specifications by locating one lower B/C block LTE base station within 500 meters of a lower E block broadcast tower.

As shown in figure 11, for both the Band 12 (blue curve) and Band 17 (black curve) duplexer receive filters, the lower D block (716-722 MHz) is subject to more than 40 dB of attenuation. As calculated in Table 1, the interfering D block signal level at the device receiver would be at least 20 dB lower than the corresponding signal levels from an adjacent lower A Block or Upper C Block base station, regardless of the separation distance/coupling loss.

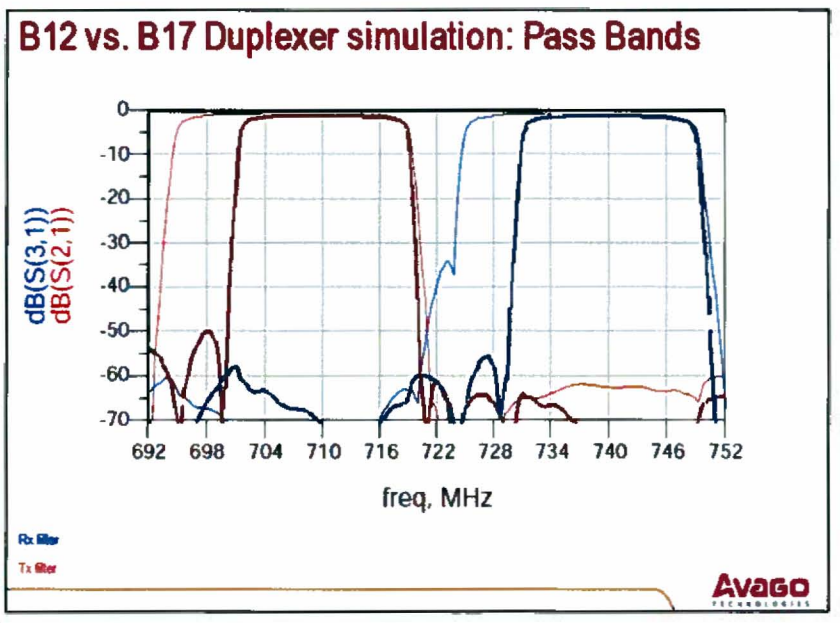

Figure 11: Band 12 vs. Band 17 Duplexer Simulation

	Lower D Block	Lower A Block	Upper C Block	Formula
Typical ERP (dBm)	77	57	57	a
Band 12 Duplexer Attenuation (dB)	> 40	0	0	b
Effective ERP to Band 12 Rcvr (dBm)	37	57	57	c = a - b

Table 1: Band 12 Filtering Eliminates Lower D Block Interference

Note that, due to manufacturing specifications and filter temperature tolerance, the Band 12 and Band 17 duplexer filters provide minimal attenuation to the Upper C base station transmissions (incursion above 746 MHz in figure 11). This boundary is shared by both band plans, and filtering performance for the two duplexers at 746 MHz is nearly identical. For similar reasons, the Band 17 duplexer does not provide attenuation to the lower A block base station transmissions. Therefore, the logic in Table 1 holds – the lower D block transmissions undergo significant attenuation by either Band 12 or Band 17 duplexers, and based on the less stringent Band 12 duplexer performance, the lower D block does not present a receiver blocking interference challenge.

The E block base station transmission will fall within the temperature variance of the Band 12 duplexer filter, as noted by the blue curve within 722-728 MHz in Figure 11. For this reason the E block warrants a closer examination of potential interference impacts. Recall the three potential interference mechanisms affecting devices: intermodulation, OOBE, and receiver blocking. The potential for intermodulation was addressed in section IV.

The potential impact of OOBE from the E block to the lower B and C device receive blocks would not depend on the B/C device duplexer. Recall that OOBE interference falls within the desired passband of the device receiver. This interference is in-band to the receiver, and is not affected by device receive filtering. Thus, the selection of a Band 12 versus a Band 17 duplexer has no impact on controlling OOBE interference from the lower E block.

The last remaining potential interference mechanism is receiver blocking, the mechanism which may occur if a nearby interfering signal is strong enough to disrupt reception of a weak desired signal. In terms of device receiver blocking, the relevant 3GPP LTE performance criteria is the in-band blocking specification[13]. The in-band blocking specification requires the device to provide >95% of the reference throughput when the desired signal level is -88 dBm (10 MHz bandwidth) and the interfering signal level is -56 dBm. In typical device blocking performance, the relationship between the desired and interfering signal strengths remains for stronger signal levels as well; i.e., for a stronger desired signal, the device will continue to meet the performance criteria in the presence of a similarly stronger interfering signal.

[13] 3GPP TS 36.101 v8.9.0 (2010-03) section 7.6.1.1.

The 3GPP standard does not attempt to solve all conceivable interference issues through device filtering and guard band alone – such an attempt would significantly reduce spectrum utilization. Instead, the standard defines the required minimum performance under defined environments likely to be seen in operating networks. Operators may use the performance requirements to develop deployment guidelines for managing interference among networks. Often, specific scenarios occur so infrequently that modest adjustments to site placement negate the interference, and permit greater flexibility in device filtering and design. The E block to lower B/C blocks is just such a situation.

The 3GPP in-band blocking specifications provide the guidelines needed to define a deployment strategy for the lower B/C block operator which will eliminate the potential for interference from the lower E block high-power transmission. First, the coverage range for the E block transmission may be calculated as shown in Table 2. The E block station parameters assume a 100 m tower with a 50 kW radiated power level, parameters which meet or exceed numerous MediaFLO site installations today. The radii for urban and suburban environments are calculated using the Okumura Hata model, a commonly used radiofrequency propagation model for spectrum bands below 1500 MHz. In-building penetration loss of 20 dB for urban and 10 dB for suburban are included as well, since wireless networks are designed for the weakest link, indoor coverage. On-street signal levels for both desired and interfering signals would be stronger than the limiting, indoor signal level. In an urban environment, the interfering signal level of -56 dBm may reach up to 500 m from the tower location, versus 3.1 km for a suburban environment.

Distance from Tower (m)	Propagation Model	Path Loss (dB)	Ant gain reduction (dB)	Building Loss (dB)	Interfering Signal at Device (dBm)
540	Hata Urban	108	-5	20	-56.2
3100	Hata Suburban	123	0	10	-55.8

Table 2: Lower E Block Propagation Distance

The second step in the process is to calculate the relative radius of the lower B/C base station transmission for -88 dBm, assuming a 30 m radiation center and a radiated power of 500 W, assumptions typical for cellular-like wireless deployments. The relevant calculations are provided in Table 3. In an urban environment, the lower B/C base station has twice the available range to reach the -88 dBm level compared to the E block interfering signal range for -56 dBm. This affords significant flexibility in the lower B/C base station placement relative to the E block tower. Similarly, in suburban environments, the lower B/C base station range advantage provides flexibility of several hundred meters relative to the E block tower location.

Distance from Base (m)	Propagation Model	Path Loss (dB)	Ant gain reduction (dB)	Building Loss (dB)	Desired Signal at Device (dBm)
1050	Hata Urban	125	0	20	-87.8
3500	Hata Suburban	134	0	10	-87.4

Table 3: Lower B/C Block Near-Location Distance to Prevent Blocking

The relationship between the E Block base station location and the range of possible lower B/C base station locations to eliminate interference is illustrated in Figure 12. The lower B/C base station is shown by the black tower, and the E block base station is illustrated in red.

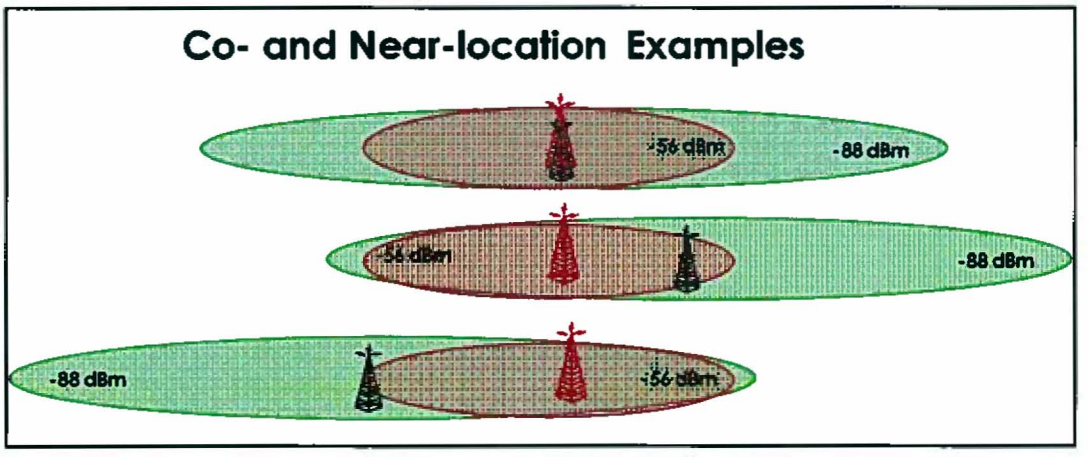

Figure 12: Lower B/C Base Station Deployment Flexibility in Preventing Device Blocking

Although the E block has an advantage of 20 dB in transmit power and a taller transmit height, the 3GPP minimum performance of the in-band blocking specification effectively overcomes these advantages. Near-locating one Lower B/C base station within 400-500 meters of an E block transmitter will ensure compliance with the reference signal conditions in the 3GPP standard. Note that the larger B/C radius allows flexibility in the location of the tower relative to the E block transmitter, greatly simplifying the deployment planning process for the lower B/C operator. The base station may be placed anywhere within several hundred meters of the E block transmitter, a simple planning assumption given the large number of towers required for an LTE wireless deployment.

The above analysis is confirmed through an Ericsson contribution to 3GPP in 2008[14], noting a less than 0.2% impact to the lower B block devices in system simulations when using the Band 12 duplexer. Indeed, Ericsson's conclusion after assessing the interference scenarios was that "Band 15

[14] R4-081356, "On the Introduction of Band 15", agenda item 6.1.2.2, TSG-RAN Working Group 4 (Radio) Meeting #47bis, Munich, Germany, June 16-20, 2008, p. 3. The Band 15 discussion in the first half of 2008 is the same band later adopted as Band 17.

should not be introduced considering the risk of market fragmentation."[15] (Band 15 was the term used for Band 17 in the first half of 2008.)

VI. Conclusions

As demonstrated above, the interference cases raised by opponents of Band 12 are not unusual and are easily eliminated through minimal RF planning such as takes place within any new technology deployment. The nature of broadcast system design is such that at most one or two towers per city are deployed, to reduce cost of deployment and operations. In the rare circumstances where base station near-location may be needed, the RF design impact is minimal. Locating one base station within 500 meters of a broadcast tower, when a typical city requires hundreds of LTE base stations for coverage and capacity, is a simple RF engineering step to include in the deployment planning process. The Band 12 duplexer employed in a system as described above will fully comply with the 3GPP performance criteria for the lower B and C blocks. There is no compelling interference reason for selecting a Band 17 duplexer which only covers a subset of the lower 700 MHz paired spectrum blocks.

[15] Ib. at 5.

About the Authors

Chris Helzer, Partner, Wireless Strategy, LLC
Chris has 18 years of technical leadership in wireless communications, product development, and software development. Prior to Wireless Strategy, Chris was the Director of Radio Access Network and Subscriber Unit Architecture at Nextel Communications. Earlier experience includes work as the product manager for a tool for monitoring and reporting the performance of wireless networks, an RF engineering consultant designing much of Nextel's iDEN network in California, and a software developer working on medical billing systems and custom database applications. Chris holds a B.S. in Electrical Engineering and a B.S. in Physics from the University of Maryland, College Park.

Doug Hyslop, Partner, Wireless Strategy, LLC
With 18 years of experience, Doug has led RF engineering teams for large markets, directed major technology development programs, and advised executives of the business impacts of wireless technology evolution. Prior to Wireless Strategy, Doug was the Director of Next Generation Access Technologies for Nextel and Sprint Nextel. Earlier experience includes the construction and launch of the first iDEN systems in California and Texas, RF capacity tool development and support, and management of iDEN base station evolution. Doug earned a B.S. in Electrical Engineering from the University of Virginia.