Deterministic Equations for Computer Approximation of ITU-R P.1546-2

Sid Shumate
Givens & Bell, Inc.
Email:tsunami@tidalwave.net Voice: (703) 754-2478 Fax:(703) 818 2425

Abstract:

This paper introduces a complete set of deterministic and deterministic-based equations and methodology for computer implementation of an approximation of the results obtained from the use of Figures 1, 9 and 17 in ITU Recommendation P.1546-2. This set of approximation equations and methodology are for use in computer software implementations estimating radio signal field strength over land, in the 10 MHz to 3GHz range, for a radio path length between 1 and 1000 km., with a reliability of 50% of locations, 50% of the time, and a receiver height at or below 25.3 m. The accompanying computer spreadsheet provides a full demonstration of the use of these equations. The only non-preset input data required consists of the transmitter and receiver heights, the frequency, and the path length. These approximation equations are based on Beer's Law, Snell's Law, Free Space Dispersion, Radiative Transfer Engine Theory, ITU Recommendations P.453-7, P.530-7, P.833-2 and P.1546-2, and the Generic Model of 1-60 GHz Radio Propagation through Vegetation.

Free Space Dispersion: The classic term "free space loss" is a misnomer; a more accurate term is "dispersion". The classic textbook form of this equation, FSPL= 20log(d) + 20log(f) +32.44 dB, does not include the vertical path component. Therefore, we prefer use of a version of the Free Space Dispersion (FSD) equation:

$$FSD=10\log_{10}((h_1- h_2)^2+d^2)+20\log_{10}(f)-147dB \quad (1)$$

Where f is in Hz, and the horizontal earth surface path length, d, the transmitter height, h_1, and the receive height, h_2, are all in meters. P.1546-2 uses maximum field strength value curves. Free Space Loss (FSL) is utilized on the figures as maximum (free space) lines. They are calculated using:

$$E_{fs} = 106.9 – 20\log(d) \text{ dB(uV/m), d in km.} \quad (2)$$

Alternately, for more accuracy, using FSD:

$$E_{fs}=106.9–10\log((h_1-h_2)/1000)^2+d^2)\text{dBuV/m} \quad (3)$$
with d in km.

Two-ray multipath: A Bouguer Line analysis of the data indicates that no significant two-ray multipath contribution exists in the P.1645-2 data.

Developing Clutter Absorption Loss equations: Clutter absorption attenuation occurs along the path of the direct signal from the transmitter to the receiver. On a typical broadcast path, a signal from a high transmitting site transmits into clear air. The receive site is at a relatively low height, 2 to 10 meters above ground level, and the "clutter layer", consisting of a layer of foliage and other absorptive materials atop a smooth or irregular terrain, is taller that the receive antenna height. At a point along the direct signal path, the direct signal path enters the clutter layer. While the composition of the clutter varies tremendously from site to site, if the empirical database is extensive, and the clutter, on the average, can be considered to be relatively homogeneous in absorption per meter and in the height of the clutter layer, then it is possible to derive not only an average value of clutter attenuation per meter, but an estimate of the average clutter canopy height. We define C_{HR} as the average clutter layer height above the receiver; C_{HR} is equal to C_H, the average clutter height, less the effective receive height, h_2. The clutter loss, at its simplest, can be a straight-line function of the form: A = d * AB, where AB is the Clutter Absorption coefficient, and d the absorption path distance. Such an equation exists: Beer's Law. Beer's Law is an extension of the Bouguer Law, which was rediscovered as the Lambert law of absorption. Beer's Law, defined for radio propagation is:

$$A_{CL} = AB * clp * c, \quad (4)$$

Where: A_{CL} is the attenuation of the signal in dB/meter: $A_{CL}=\log_{10}$(power in/power out) (5)

clp is the length of the path (in meters) that the signal follows through the absorbing medium (ground clutter), and AB is the absorption factor function, defined in attenuation per meter, (dB/meter), the absorbtivity of a theoretical,

homogeneous, one-meter depth of statistically average clutter as derived from the figures in ITU-R P.1546-2. The coefficient c represents the density of the clutter, and is preset to c = 1.0.

Next, we determine an equation for the length of the direct propagation path that passes through the clutter, d_{cp}. To calculate the angle from the receive site back toward the transmit site, take the difference in height between the transmitting and receive antennas, divided by the total path distance, to obtain the tangent of the receive site take-off angle, θ_r. For a line-of-sight path, the trigonometric functions associated with θ_r are:

$\tan \theta_r = (h_1 - h_2)/d = (C_H - h_2)/d_{cp}$ (6)

$\theta_r = \text{atan}((h_1 - h_2)/d)$ (7)

$\sin \theta_r = (h_1-h_2)/r_0 = (C_H - h_2)/clp = C_{HR} / clp$ (8)

$r_0 = ((h_1 - h_2)^2 + d^2)^{1/2}$ (9)

where C_{HR}, clutter height above receive height is:

$C_{HR} = (C_H - h_2)$ (10)

C_H = average of the clutter canopy height

d = flat earth surface distance between the transmit and receive antennas

h_1 = effective height of the transmit antenna

h_2 = effective height of the receive antenna

clp = cluttered path length, through clutter layer from entry point to receive antenna

d_{cp} = the portion of d under the clp.

r_0 = total length of direct signal path ray from transmit to receive antenna.

we then derive:

$r_0 = (h_1 - h_2)/ \sin \theta_r$ (11)

$clp*(h_1-h_2)=r_0*(C_H-h_2)=((h_1-h_2)^2 + d^2) *(C_H - h_2)$

$clp =(((h_1 - h_2)^2+d^2)*(C_H-h_2))/ (h_1 - h_2)$

$clp = C_{HR} / \sin \theta_r = (C_H - h_2) / \sin \theta_r$ (12a,b,c)

where $\sin \theta_r = (h_1 - h_2) /((h_1 - h_2)^2+d^2)^{1/2}$ (13)

From Beer's Law, the clutter attenuation A_{CL}, is equal to the average clutter absorption per meter function, AB, times the clutter path length, clp:

$A_{CL} = AB * clp = AB * (C_H - h_2) / (\sin \theta_r)$ (14)

Based on an assumption that the average clutter height effectively remains the same at all distances in the ITU Figures, we interpret from Figure 1 of P.1546-2, where we find: f=100 MHz, h_1 = 10 (or, 37.5/4=9.375) meters transmitter height, and h_2 =10 meters (rural) receive height. The statistical reliability is 50% of locations, for 50% of the time. We reference the non-free-space clutter attenuation as being the vertical distance between the h_1 line and the maximum line.

Solving for the Clutter Factor coefficients: The next step is to quantify our constants and factors, and include a form of Radiative Transfer consideration to the Beer's Law equation. The value of AB is orders of magnitude smaller at 40 km than at 1 km. Since AB for a homogenous medium must be a constant, there is a second set of phenomenon at work here; Radiative Transfer. Our hypothetical simplified framework model for radio signal propagation consists of up to three significant considerations:

For a transmitting antenna at or below the clutter layer, the considerations in addition to FSL are:

1. Absorptive loss of the signal, as it travels vertically (and to some extent, horizontally) up from the antenna to the top of the clutter layer, and back down through the clutter layer to reach the receive antenna.
2. Radiative Transfer scatter and scatter function (surface wave) across the top of the clutter layer.
3. Absorptive loss of the signal that occurs near the start of the cluttered path as the Radiative Transfer scatter and scatter functions build up to swamp out the absorptive loss.

For a transmitting antenna above the clutter layer, the primary considerations in addition to FSL are:

1. Absorptive loss of the signal that occurs near the start of the cluttered path as the radiative transfer function builds up to swamp out the absorptive loss.
2. Radiative transfer across, through, and under the clutter layer from where the signal path enters the clutter layer, to the receive antenna.

Beer's Law Analysis: To separate out the Beer's Law absorption factor, AB, from the ITU data, we go to the h_1 = 10 line, where the entire radio signal path is below the clutter canopy line, and clp, the cluttered path distance = d, the flat earth radio path distance. By definition, d_1, the portion of d, the path distance, above which the clp is found, is here also equal to clp, and at h_1 = 10, below the clutter canopy,

$clp = d = d_1$. (15)

$d_1 = C_{HR}/(\tan \theta_r)$ (16)

On the h_1 = 10 curve, at d=0, $h_1 - h_2 = 0$; clp = 0, and $A_{CR} = AB(clp) = 0$.

On the h_1 = 10 curve, at d=1000 meters, clp = 1000 meters, and $A_{CR} /(clp) \leq AB$

At h_1 = 10 (9.375) m., and d= 1 km (1000 meters), A_{CR} = 106.9 – 90 = 16.9 dB, and

AB $\geq$ 16.9/1000 = 0.0169 dB/meter: this value has already been reduced by the effect of Radiative Transfer over the first 1000 meters, so we can only

say that the constant AB > 0.0169 dB/meter. The loss at 2 km is: 100.88 –80.25 = 20.63 dB; less the loss in the first km, the average loss in the second km is only 3.7 dB vs 16.9 dB in the first km; at 4 km, doubling the distance, the loss is 94.86 – 69.5 = 25.36 dB, a 4.7 dB additional loss in 2 km; and an average of 2.4 dB loss in the 3rd and 4th km; so the Radiative Transfer function, RTE, quickly takes over from direct path propagation as the primary delivery medium of radio frequency field strength at the receive location, even in the first km.

The losses are therefore:

$$A_{CR} = AB(clp) - RTE \qquad (17)$$

And this general equation includes the considerations for the condition of "at or under the clutter path" mentioned above, as the AB(clp) term includes the entry and exit losses from the transmitter to the top of the clutter layer, and from the top of the clutter layer to the receive antenna.

Even at $h_1 = h_2$, there can be some initial clutter absorption loss. Referring to ITU-R P.833-2, Attenuation in Vegetation[5], Figure 1; note that in this example, the transmitting antenna is the same height as the receive antenna, and $h_1 = h_2$. From the chart, we notice that the moderation of absorptive loss in Radiative Transfer starts at zero at d = 0, where the initial clutter absorptive loss is represented by the straight line on the Excess loss vs. d graph. The loss reduction effect of Radiative Transfer increases with distance, causing the absorptive loss line to bend in a logarithmic manner, reducing to a horizontal line as d increases.

For all cases where the transmitting antenna height, h_1 is not equal to the receive antenna height, h_2, the Radiative Transfer function, RTE, would vary with the distance d_1, not clp. The distances clp and d_1 are nearly the same at far distance, but near the transmitter, as d, clp and d_1 approach zero, clp approaches the value of C_{HR} as (sin θ_r) approaches 1.0; the RTE function approaches 0 as it varies with d_1, which approaches d_1 = (C_{HR} /Infinity) as the (tan θ_r) approaches tan ($\pi/2$) radians, or tan (90°).

Therefore, at $h_1 = 10$:
At 0 km, $A_{CR[1]} = 0$, clp = 0, d= 0, and RTE = 0
At 1 km, $A_{CR[1]} =$ 16.9, AB > 0.0169 dB/meter
At 2 km, $A_{CR[1]} =$ 20.63
At 4 km, $A_{CR[1]} =$ 25.36

At 2 km, without the RTE scatter and scatter function, i.e. where the clutter layer is so deep that the RTE scatter components are minimalized, the attenuation would be at least:
$A_{CR[2]}$=AB(clp)–RTE >.0169(2,000)–0 >33.8 dB.

So in the second km, surface wave radiative transfer is reducing the attenuation by at least: (33.8 – 20.63) dB / 1 km > 13.17 dB/km, and over the next doubling of distance, reducing the attenuation by at least: $A_{CR[4]}$=AB(clp)–RTE> .0169(4,000)–0>67.6 dB. (67.6–25.36)dB/2km> 42.24dB/2km>21.12 dB/km.

The rate of reduction of the scatter components, including the surface wave of the radiative transfer function, where both the transmitting antenna and receive antenna are below the clutter layer, triples between 1 to 2 km, and 2 to 4 km, a factor of 42.24/13.17 = 3.21. Therefore, we can estimate that the rate of reduction of attenuation for the distance between 0 and 1 km is 13.17/3.21= 4.1dB, and therefore the attenuation for the Beer's Law direct ray cluttered path should be at least 16.9 + 16.9/4.1 dB, or > 22.02 dB per kilometer, giving us a new estimate of: AB > 22.02/1000, or > 0.02202 dB/meter.)

Repeating the above process with AB > .02202 dB/meter, the iteration stabilizes with an AB = .019526 dB/meter, and at clp = 1 m.:

$$A_{CR[DeepClutter]} = 0.01952(clp) = 0.0195dB/m. \qquad (18)$$

<u>Radiative Transfer</u> The Radiative Transfer function, or Engine, (RTE) as defined in the Generic Model[3], consists of a coherent component, I_{ri}, and an incoherent (diffuse) component I_d. I_d has two subcomponents, I_1 and I_2. These are:

1. Absorption. This is Beer's Law clutter absorption. Johnson, Schwering,[2] refers to this as the "first term"; The Generic Model refers to this as the coherent component I_{ri}.
2. Scattering. The Generic Model refers to the two equations that comprise this component, combined, as the component I_1. Johnson, Schwering, refers to this as the "second term." In practice, its effect moderates the absorption loss I_{ri} for a very short distance, mid-path, as graphically displayed in Figure 3-18 of the Generic Model. The approximation combines consideration with I_2.
3. The Scattering Function. The Generic Model refers to this as the non-coherent component I_2;

Johnson, Schwering, refers to this as the "third term". In practice, it quickly takes over from I_1. The Generic Model uses an exponential term added to a straight-line function to model this component.

Each RTE component controls the loss value during a separate portion of the total path length.
To derive the RTE coefficients from the P.1546-2 data, at 2 km, where the clutter layer is so deep that I_d (I_1 and I_2) is insignificant, the attenuation would be at least:

$A_{CR[2]}$ = AB(clp) – RTE >.0195 (2,000) – 0 > 39 dB, and in the second km, I_d is reducing the attenuation by at least: 18.4 dB/km. Over the next doubling of distance, the attenuation is reduced by at least: 78.1 dB. From an analysis of these results a function of form:
$A_{SWRT} = C_{AB} + b*20\log(d_1 +1)$ dB, d in km, (18)
will serve as the form for an initial, interim, combined and simplified RET attenuation (first term) and scatter (second and third term) development equation valid for $d_1 = d \geq 1$ kilometer. At $h_1 = h_2$, C_{AB} should be a constant value, as the RET startup, entry and exit losses should be the same for all d_1 = clp = d. So we should be able to solve for a constant b that will stay approximately the same for all values of h_1 and h_2 when both are below the clutter canopy top, varying only with statistical variation in data, until we reach a point that is level with the top of the clutter layer.

C_{AB} is a function representing the initial absorption attenuation losses, the initial exit loss from the transmitting antenna to the top of the clutter layer, and any final entry loss to the receive antenna. The $b*20\log(d_1 +1)$ term will represent the I_d loss moderation function for the RET with both terminals below the clutter line, C_H. The 1 is added so that the logarithmic function used, a common logarithm, or base 10 function, will properly solve to zero ($20\log_{10}$ of 1/1 is zero dB) when d = 0.

As we increase h_1 to approach the top of the clutter layer, C_{AB} will approach a minimum. This can be used to determine the approximate depth of the average clutter layer in P.1546-2. Solving for the data on each h_1 line starting with 10 meters, and fitting to match the P.1546-2 Figure 1. h_1 = 10 line data, and using d in lieu of d_1, we obtain:

$$A_{SWRT} = C_{AB} + b*20\log(d_1 +1) \text{ dB} \quad (19)$$

Solving at h_1 = 10 meters, C_{AB} = 6.47;
At h_1 = 20 meters, C_{AB} = 1.638, and
At h_1= 37.5 meters, C_{AB} = -1.966

The negative value of C_{AB} at 37.5 meters, a nonsensical value, indicates that our calculation failed at 37.5 meters because d1 no longer equals d; we have reached and exceeded the top of the average combined terrain roughness and absorptive clutter layer in the P.1546-2 data. By iteration, an average clutter canopy top value of C_H = 25.30 meters is obtained.

C_{HR}, the portion of C_H above the receive antenna height, h_2, is then: $C_{HR} = C_H - h_2$ = 15.3 meters.

<u>Determining an equation for C_{AB}:</u> This at first appears to be a Beer's Law formula, useable only for $h_1 \leq C_H$. The solution must equal zero at $h_1 = C_H$. This attenuation, C_{AB}, now identified as due to Radiative Transfer launch losses, and a part of I_{ri}, will follow the Beer's Law equation:

$$C_{AB} = AB* \text{clp}_{[RTL]}. \quad (20)$$

The distance that the signal must traverse through the clutter from the transmit terminal to the top of the clutter layer, clp, must be determined as;

$$\text{clp}_{[RTL]} = ((C_H - h_1)^2 + (d_{[RTL]})^2)^{1/2} \quad (21)$$

where $d_{[RTL]}$ is the ground level distance traversed by the radiative transfer primary ray rising from the transmitter antenna to the clutter layer canopy.

On attempting an iteration using:

$$C_{AB} = AB* \text{clp}_{[RTL]} \quad (23)$$
$$\text{clp}_{[RTL]} = (C_H - h_1)/ \sin \theta_e \quad (24)$$
$$(\sin \theta_{e[h1=20]}) = 1.91(\sin \theta_{e[h1=10]})$$
$$AB_{[h1=10]} = .44(\sin \theta_e)$$
$$AB_{[h1=20]} = .23(\sin \theta_e)$$

It is found that an exponential parabolic solution should exist for RTE component I_d. Since we are solving for a value of field strength loss, the curves would match the inverse of the exponential *Sum of Contributions* curves in the Generic Model, Figure 3-18, and be a logarithmic function. It has already been found and shown that a single term of this logarithmic function is adequate to approximate the RTE I_d functions at or below the clutter canopy top, where clp = d = d_1. The form it would follow is:

$$A_{RTE} = \text{MIN}(I_{ri} , I_d) = \text{MIN}(I_{ri}, \text{MIN}(I_1, I_2) \quad (25)$$

$$A_{RTE} = \text{MIN}((AB*(\text{clp})), \text{MIN}((20\log(a_1 d_1 +c_1)),(20\log(a_2 d_1 + c_2)])))) \text{ dB} \quad (26)$$

Our model splits the RTE into three competing terms. The first, I_{ri} term is the straight-line function of the absorptive loss line function(s) following Beer's Law. For the at-or-below canopy computations, it will be split into rising signal

clutter absorption loss C_{AB} and Radiative Transfer absorptive launch loss, C_{AB2}. It is reduced by terms two and three, as the amount of the absorptive loss is undermined by the RTE function. It is determined that we can continue to use the single logarithmic equation to adequately approximate the RTE I_d function.

Solving for the RTE terms at or below the clutter canopy line: Using 2 points to solve for the RTE field strength attenuation losses at or below the clutter canopy line ($A_{RTE\text{-}ABC}$), in order to obtain the I_{ri}, or first term, absorptive functions, C_{AB} and C_{AB2}, at or below (ABC) the clutter line, using $A_{RTE\text{-}ABC} = C_{AB} + 1.34795*20\log(d_1 + 1)$ dB, where $d_1 = d = clp$, results in:

$$C_{AB} = (C_H - h_1)(2 - 1.56\exp(C_H - h_1)^{-1})\text{dB/m}. \quad (27)$$

Absorption Loss in the Radiative Transfer Launch Range; the second part of I_{ri}. In addition to the rise function above, a trans-clutter path absorptive loss function does briefly appear at the beginning of the radio path. The equation includes a decay exponent, to reflect the swamping, or bypass increasing with distance, of its effect by the radiative transfer function.

$$C_{AB2} = ce^{bd1} = (x - a(CH - h_1))e^{bd1} \quad (28)$$

A best fit to the data is then achieved with:

$$A_{RTE\text{-}ABC} = C_{AB} + C_{AB2} + 1.348*20\log(d_1 + 1)\text{dB}, \quad (29)$$

where:

$$C_{AB} = (C_H - h_1)(2.06943 - 1.56184\exp(C_H - h_1)^{-1})\text{dB/m} \quad (30)$$

and:

$$C_{AB2} = (17.98 - .84224(CH - h_1))e^{-0.00061(d1)} \quad (31)$$

where d_1, C_H and h_1 are in meters.

Which should be used with an "if" statement, as the above equations are valid only for $h_1 \leq C_H$. If $h_1 > C_H$, The equation for C_{AB} disappears, and the equation for C_{AB2} takes a significantly different form.

RTE Above the Clutter Line Several changes occur in the set of propagation phenomena when the transmitter height rises above the clutter layer while the receiver remains below the clutter layer. The logarithmic form of the term I_d of $A_{RET\text{-}ABC}$, changes, and would theoretically follow the form of:

$$A_{RETA} = MIN(AB*crp/TC, MIN((c_{I1}*AB*crp + c_1*\exp(1/d_1)), (c_{I1}*AB*crp + c_1*\exp(1/d_1))) \quad (32)$$

In order to match the functional description of the three terms, I_{ri}, I_1 and I_2, given in the Generic Model, section 3.6.4.

Above the clutter canopy, the radio signal will follow a two-ray path: from the transmitter to the clutter canopy, and through the clutter canopy to the receiver. Due to the effect of Snell's law, these two rays will not form a straight line. AB above the canopy will be multiplied by a function relating to T, the transmission coefficient, varying with the angle of incidence of the direct ray into the clutter canopy, according to the Fresnel equations. The angle of incidence, θ_i, the angle of the actual radio path with respect to the vertical (y) axis, will have to be calculated from Snell's Law, using the refractive indices of the atmosphere and the clutter canopy. The C_{AB} rise absorption function disappears above the canopy. The C_{AB2} function equation changes; as it now represents the radiation transfer effect launch losses from a signal arriving above the clutter canopy.

Absorption above the Clutter Canopy We look primarily to the 1 km data on each h_1 meter curve above the canopy, to determine and verify the equation for C_{ABA} (C_{AB2} above the clutter canopy), as the initial values of these curves represent only Beer's Law absorptive losses. On the h1= 1,200 m. curve, due to the effect of Snell's Law, it is determined below that the actual radio path traversed will not be long enough for the RTE I_d terms to have effect. In the primarily line-of-sight range, all losses will be Beer's Law absorption losses, i.e. RTE I_{ri} or first term losses. The absorption loss alone follows the function:

$$C_{ABA} = AB* crp/TC \quad (33)$$

Where T is the relative transmission coefficient of the incoming ray as per Snell's Law; a ratio representing the amount of incoming radio signal that will be transmitted through the clutter layer to the receive point. C will represent any other residual transmissive coefficient, including consideration of clutter orientation and reduction in T due to terrain roughness. The term crp represents the actual cluttered radio path length through the clutter as reduced by the effect of Snell's Law.
There are three considerations associated with this coefficient, related to the ratios of the refractive indices and dielectric coefficients of the two mediums, air and clutter layer.

1. The variation in the actual path of the radio signal, from the direct path between the transmitter and the receiver, caused by the

difference between the incident angle of the refracted signal vs. a theoretical direct ray between the transmitter and the receiver. This difference causes the actual path refraction point on the clutter canopy to be farther from the transmitter than the theoretical direct ray, and requires a reduction adjustment in the length of clp (the new value is identified as crp) and d_1. This adjustment reduces the absorptive and radiative transfer losses.

2. The (actual) transmission coefficient, T, is a ratio of the signal arriving at the clutter layer top that is transmitted downward by refraction through the clutter layer to the receive point, relative to the signal arriving from the transmitter. The effect of the application of this coefficient would be to increase the loss.

3. The approach of the reflection coefficient toward 1.0 (and the associated approach of the transmission coefficient to zero) at low grazing angles over rough surfaces, as revealed by Barrick[1]. At great distances from the transmitter site, or for very low transmit height, this would significantly reduce the reception by direct transmission through the canopy, and theoretically minimizes the direct signal absorptive loss components from the calculation at a significant distance from the transmitter, leaving primarily the surface wave I_2 component of the RTE to transfer energy to the receive site.

To solve for T requires the values of the cosine of the incident ($\cos\theta_i$) and transmissive ($\cos\theta_t$) angles. To obtain these in a spreadsheet or in computer code, it is first necessary to iteratively solve, using Snell's law, for the values associated with the actual radio signal path.

<u>The Actual Radio Signal Path</u> The center of the path of the radio signal does not follow the theoretical straight-line direct path ray from the transmitter, through the clutter canopy, to the receiver. Instead, by Snell's law, the angle of the refracted ray from the clutter canopy to the receiver, with respect to a vertical line, (which we will refer to as the transmissive angle, θ_t), is related to the incident angle, θ_i, of the actual path line between the transmitter and the clutter canopy with respect to a vertical line, by the Snell's law formula:

$$\sin\theta_i/\sin\theta_t = \eta_{cc} / \eta_s \qquad (34)$$

where:

η_{cc} is the refractive index of the clutter at and below the canopy top.

η_s is the refractive index of the atmosphere at the surface of the clutter canopy layer.

The differences this makes in the transmitter take off angle, the receive take off angle, the uncluttered radio path length (urcp) and the cluttered radio path (crp), for what is now a two-ray calculation (here used for refraction, not reflection), can be most efficiently solved on a spreadsheet in a three cycle iteration (or, in code, an iteration repeating until the level of accuracy required is achieved). First, it is necessary to determine the values of θ_i and θ_t; this requires the refractive indicies of air and the clutter canopy.

<u>The refractive indicies of air, vegetative clutter, and water:</u> The refractive index of air is about 1.000301; of water is about 1.33. Our target area is over land, temperate climate; for P.1546-2, we need to consider foliage and other clutter in the continental Europe and the U.S. For these areas, a range of ε_r used by Tamir[7] produces a starting value of $\eta_g = 1.015$, resulting in:

$$\sin(\theta_i)/\sin(\theta_t) = \eta_{cc}/\eta_s = 1.015/1.000301 = 1.0147$$

Later, data-matching iteration shows that the optimal value of η_{cc} for the average clutter canopy in P.1546-2 is:

$$\eta_{cc} = 1.0010 \qquad (35)$$

then:

$$\sin(\theta_{ic})/\sin(\theta_{tc}) = \eta_{cc}/\eta_s = 1.0007.$$

The incident angles are measured with respect to the vertical, or y-axis. It is not necessary to include the additional path length due to refraction. But the effect of the change in ratio of uncluttered path length to cluttered path length is significant.

<u>Geometric calculation of the actual radio signal path parameters</u>:

Step 1: calculate the earth curvature correction angle for the earth radius, $\theta_{\Delta e}$: $\theta_{\Delta e} = d/r$ (36)

where: d is the total flat-earth radio path length from transmitter to receiver

r is the actual earth radius: 6,378,137 meters.

Step 2: calculate the earth curvature height; hc:

$$hc = (CH + r)(1 - \cos(\theta_{\Delta e})) \qquad (37)$$

Step 3: calculate the equivalent curvature flat distance, dx: $dx = (CH + r)\sin(\theta_{\Delta e})$ (38)

Step 4: calculate the un-cluttered radio path w/earth curvature correction; ucrpc:

$$ucrpc = [(h_1 - CH + hc)^2 + (dx)^2]^{1/2} \qquad (39)$$

Step 5: calculate the cosine of the flat earth incident angle; $\cos(\theta_I')$:

$$\cos(\theta_i') = (h_1 - CH + hc)/ucrpc \quad (40)$$

Step 6: calculate θ_i':

$$\theta_i' = \arccos[(h_1 - CH + hc)/ucrpc] \quad (41)$$

Step 7: calculate the total incident angle; θ_{ic}:

$$\theta_{ic} = \theta i' + \theta_{\Delta e} \quad (42)$$

Step 8: calculate the sin of the total incident angle;

$$\sin(\theta_{ic}) = \sin(\theta_i' + \theta_{\Delta e}) \quad (43)$$

Step 9: calculate the sin of the transmission angle, θ_{tc} : $\sin \theta_{tc} = (\eta_a / \eta_g \sin(\theta_{ic})$ (44)

Step 10: calculate θ_{tc} : $\theta_{tc} = \arcsin [(\eta_a / \eta_g \sin(\theta_{ic})]$

Step 11: calculate $\cos \theta_{tc}$:

$$\cos(\theta_{tc})=[1- \sin^2(\theta_{tc})]^{1/2} \quad (45)$$

Step 12: calculate the cluttered radio path with earth correction; crpc:

$$crpc = (CH - h_2)/ \cos(\theta_{tc}) \quad (46)$$

Step 13: calculate the sin of the grazing angle Ψ;

$$\sin \Psi= (\pi/2 - \theta_{ic}) \quad (47)$$

Step 14: calculate the clutter canopy surface distance; d_{1a}: $d_{1a} = crpc(\sin(\theta_{tc}))/(1 - 1/r)$ (49)

Step 15: repeat steps 1 to 13 using a new d' = d (actual value) - d_{1a} until the required accuracy is obtained. For spreadsheet calculation, three iterations are adequate.

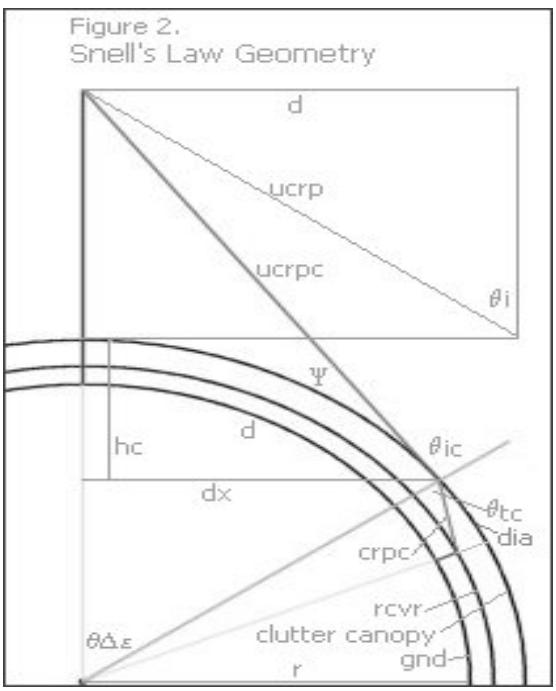

The Transmission Coefficient The transmission coefficient, T, is defined as: T = 1- R, where R is the Reflection Coefficient. The reflection coefficient, R, calculation is different for horizontal and vertical polarization:

$$R_H=[(\eta_s\cos(\theta_i)-\eta_{cc}\cos(\theta_t))/(\eta_s\cos(\theta_i)+\eta_{cc}\cos(\theta_t))]^2$$

$$R_V=[(\eta_s\cos(\theta_t)-\eta_{cc}\cos(\theta_i))/(\eta_s\cos(\theta_t)+\eta_{cc}\cos(\theta_i))]^2 \quad (50,51)$$

The P.1546-2 curves are not separated by polarity, so are treated as circularly polarized, by averaging the horizontal polarity and vertical polarity results:

$$R = 0.5R_H - 0.5R_V ; \quad T =1- R \quad (52 a,b)$$

For an air to clutter canopy interface, for most practical purposes, R = .001, T = .999 at the transmitter site, gradually reversing to R=.999, T=.001 at the horizon. Snell's law therefore contributes to the effects documented by Barrick at low grazing angles.[2] The consideration of T, and the significant change in the length of the cluttered radio path, crp, versus the temporarily considered direct path, clp, is accommodated by modifying our Beer's Law equation for the RTE I_{ri} term:

$$C_{ABA} = AB*crpc/ TC \quad (53)$$

The direct "cluttered path", clp versus the actual "cluttered radio path", crpc: The length of the cluttered radio path, due to the Snell's angle change at the clutter canopy, is significantly less than the direct ray path from the transmitter to the receiver. As θ_{ic} approaches 1.57 radians, i.e. the transmitter to clutter entry point ray approaches the horizontal, θ_{tc} stabilizes near 1.4004 radians for an air to clutter interface. At d = 80 km, with h_1 = 1,200 m., the portion of the direct ray that would pass through the clutter layer, clp, would be 1,029 meters; but due to angle of the refracted transmission ray, the actual radio path, crpc, has stabilized near 89.9 meters, and will not exceed 90.25 meters at d = 1,000 km.

Absorption Losses above the Clutter Line We have previously derived an estimate from the P.1546-2 data, for AB in clutter deep enough that radiative transfer does not function, of 0.0195 dB/meter. Using this above the clutter line and adding consideration of the Snell's Law transmissivity, T, to accommodate the "clutter canopy signal splitter" represented by the reflected energy versus the transmitted (into the clutter) energy at the air to canopy top interface. T will vary with the incidence angle of the radio signal.

As a result of the significant shortening of the cluttered radio path by the effect of Snell's Law, the losses on the h_1 = 1,200 m. line of P.1546-2 out to 3 km are all Beer's Law absorption losses, a.k.a. RTE I_{ri} term losses; as the actual length of the canopy top traversed, (d_{1a}), due to the action of Snell's Law, is only 15 to 50 meters; not long enough for the RTE I_d term phenomena to overtake

the I_{ri} losses. Study of the curves resulting from plotting the non-FSL losses vs. distance indicate that the Beer' Law absorption losses apply for up to the first 50 meters of clutter canopy path length; from 50 meters to 225 meters, a second set of I_d effects provide the lowest losses; and from 225 meters onward, a third set of loss phenomenon are the controlling function. This can clearly be seen on the following h_1 = 1200 chart, Figure 1, where the initial, climbing I_{ri} loss line gives way to a relatively flat I_d line, which then transitions to a climbing flat curve.

The three distinct sections to the curve suggests the I_{ri}, I_1, and I_2 Radiative Transfer functions; but the Generic Model indicates that the length of path distance that the I_1 function controls is short compared to the I_{ri} function, less than 15 meters in canopy top (d_{1a}) distance. The relatively flat area in the above chart from d = 3 km to d= 20 km is the I_d functions, and the rising curve past 300 meters of d_{1a} distance (20 km in the h_1 = 1200 m. chart) represents a third set of Snell's Law-related RTE phenomenon, here referred to as I_3, where at a distance, absorption of the scatter and cancellation with Snell's path main signal becomes a factor to the point that up to $\Psi \leq 0$, a Beer's Law absorption calculation using AB=.0195 dB/m * d1a provides only slightly higher results. The I_3 mode continues past the horizon, functioning on side scatter up to Ψ = - .01 rad, (0.5 deg.), where the propagation transitions to a post-horizon diffraction mode.

Figure 1; Non-FSL losses in dB vs. d in km., for h_1 = 1200 meters:

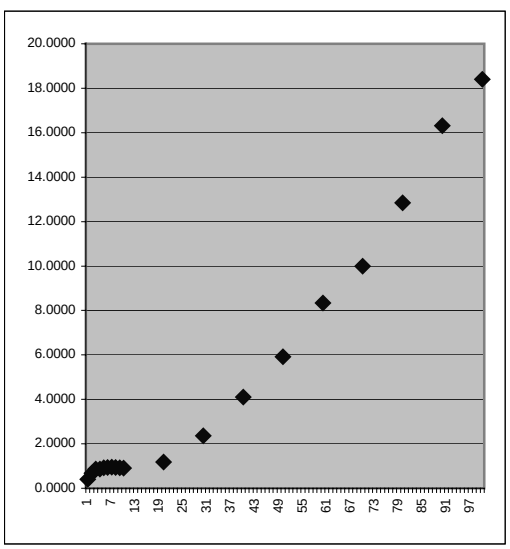

Approximation equations for the RTE I_{ri} functions:

The attenuation for the initial path distance above the canopy, out to 50 meters, are from RTE I_{ri} function, and take the form of the cluttered radio path corrected for earth curvature, crpc, multiplied by AB, the Beer's Law absorptive loss constant for average clutter, 0.0195 dB/meter, added to the transmissive loss, A_T = - 20log(T).

$$I_{ri} = crpc*AB - A_T = 0.0195*crpc - 20\log(T) \qquad (54)$$

Approximation equations for the RTE Id (I_1 and I_2) functions: Two equations were derived to match the I_d data in P.1546-2; both apply to situations where the transmitter is above the canopy top, and the canopy top distance (d_{1a}) exceeds 250 meters. The first derives only from the h1 = 1,200 meter line, and are arbitrarily assumed to apply only to h_1 > 1,000 m:

The entire function relates to the canopy top distance, d_{1a}; and is a Beer's Law distance times loss/distance formula, with the absorption and dispersion loss term containing a total path distance-related term. The I_d, or combined I_1 & I_2 function approximation for f= 100 MHz, with h_1 at or above 1,000 m. is;

$$I_{1,2[h1>1000m]} = d_{1a}[0.03\exp^{(-.14d)}] \qquad (55)$$

The h1 = 1,200 line is missing the vertical path length extension loss at locations near the transmitter site. The fact that the approximation equations for the RTE I_d function at the h_1 = 1,200 line do not match those for all other lines above the clutter line, is additional evidence that the data source and computation of the h_1 = 1,200 line may be eligible for review. For f =100 MHz, and h_1 between 1,000 meters and the canopy top, the I_d equation changes to:

$$I_{1,2[h1>1000m]} = d_{1a}[0.07\exp^{(-.17d)}] \qquad (56)$$

The RTE I3 function: The I_3 function applies for d1a distances greater than 225 meters up to the past-horizon point where diffraction loss is less, or up to a major path obstruction. The entire function relates to the canopy top distance, d_{1a}; which forms the primary distance component of a Beer's Law construct, with the absorption and dispersion loss terms containing two path distance-driven terms, and an effective transmitter height term. The last term provides consideration of an R-related reduction in RF level exciting the RTE canopy-top scatter wave for the first few km. from the

transmitter site, when low transmitter heights combine with high incident angles atop the canopy.

The I_3 approximation for f= 100 MHz, with h_1 above the clutter canopy and h_2 below the canopy, has been discerned by staged subtraction and regression to be:

$$I_3 = d_{1a}\ [0.00055d + \log(d)(0.041 - 0.0017(h_1)^{1/2} + 0.019] - .9(20\log(R)/\exp(h_1/37.5) \quad (57)$$

where d is in km, and d_{1a} is in meters.

<u>At and beyond the horizon: diffraction:</u> Analysis of P.1546-2 Figure 1, produces the following approximation for diffraction losses beyond the horizon transition point, consisting of the combination of a distance term, 0.0665d + 48.35, and a relative transmitter height term:

$$A_{DIFF[100MHz]} = 0.0665d + 48.35 - .356(h_1 - h_2)^{1/2} \quad (58)$$

The results of this equation apply where the value produced is less than the RTE I_3 term, or in all cases beyond the horizon, defined as where the combination incident angle above the clutter canopy, θ_{ic}, is greater than 1.59 radians.

<u>Frequency Compensation</u> Up to this point, we have derived only from Figure 1, with a frequency = 100 MHz. We now turn to an analysis of the change in the functions with frequency, derived from the f = 600 MHz and f = 2,000 MHz over-land figures.

<u>Frequency Compensation beyond the horizon:</u> From basic knife-edge diffraction theory, we expect: $A_{freq} = 20\log[(1/\lambda)^{1/2}]$, where λ, the wavelength of the frequency, is equal to c/f, c is the speed of light in km/sec and f is the frequency in MHz. Carrying the square root across the logarithmic function, and substituting a constant, a, for the equivalent of 10log(c), we obtain:

$$A_{DIFF}\ \text{Frequency Comp.} = 10\log(f_{MHz}) + a \quad (59)$$

Incorporating this frequency compensation into the earlier 100 MHz diffraction equation results in a complete diffraction approximation:

$$A_{DIFF} = .072d - 0.45(h_1)^{1/2} + 10\log(f_{MHz}) + 27 \quad (60)$$

<u>Frequency Compensation for RTE I_3 Function:</u>
For I_3, the frequency compensation required swings from slightly negative to positive with distance, with an intercept point controlled by the transmitter height above clutter canopy top. Two equations describe the compensation: a negative compensation term applies prior to the zero intercept point, and a positive compensation term applies after the zero intercept. The frequency compensation equations to be added to the result of the RTE I_3 computation each consists of a frequency and transmitter-height-controlled gain term multiplied by a distance term based on the distance from the zero intercept:

$$\text{Zero intercept} = 1.5(h_1 - CH)^{1/2}\ \text{meters} \quad (61)$$

If $d > 1.5(h_1 - CH)^{1/2}$, FCI_{3B} applies; if not, FCI_{3A} applies. (62a)

$$FCI_{3A} = [-20((\text{Log}(f_{MHz})-2)/(h_1)^{1/2}]*[(1.5(h_1 - CH)^{1/2} - d_{[km]})/1.5(h_1 - CH)^{1/2}) \quad (62b)$$

$$FCI_{3B} = [10.2((\text{Log}(f_{MHz})-2)/(100-1.5(h_1 - CH)^{1/2})]*[d_{[km]} - 1.5(h_1 - CH)^{1/2}] \quad (62c)$$

<u>Frequency Compensation for RTE I_d (I_1 and I_2):</u>
For the RTE Id function Id (I_1 and I_2), the height and frequency compensation approximation equation term to add to the result of the RTE computations solves to be:

$$A_{RTEfc} = -((\log(f_{MHz})-2)*(h_2/h_1) \quad (63)$$

<u>Frequency Compensation for the Beer's Law – RTE I_{ri} component</u> No frequency compensation is included for the direct absorption I_{ri} losses.

<u>Sum Approximation Equation for Attenuation Above Clutter Canopy:</u> The full form of the sum equation for Attenuation above clutter is:

$$A_{RET\text{-}AC} = A_{RTE\ (Iri\ ,Id\ \text{or}\ I3\ )} + FC_{RTE(Iri\ ,Id\ \text{or}\ I3\ )}, \quad (64)$$

<u>Transition points above the clutter canopy</u>:
If the under-canopy top ground distance d_{1a} is less than or equal to 50 meters, then the I_{ri} mode results are used. The I_d mode results apply from 50 to 225 meters. If the under-canopy top ground distance d_{1a} is greater than 225 meters, and if the combined incident angle θ_{ic} is equal to or less than 1.5775 radians, then the I3 mode results are used. If the under-canopy top ground distance d_{1a} is greater than 275 meters, and if the combined incident angle θ_{ic} is greater than 1.5775 radians, but less than 1.59 radians, then the signal is in a transition at the horizon between I3 and diffraction mode, and the lesser of these two attenuations is used. If the combined incident angle θ_{ic} is greater than 1.59 radians, diffraction results apply.

<u>Transition points below the canopy top level:</u> When the transmitter is at or below the canopy top

level, the cluttered radio path distance is equal to the path distance d. The results of the equations given for the Iri and Id functions are to be added together. If the path distance d is less than or equal to 6 km., the combined RTE I_{ri} and I_d function results control the resultant attenuation. If the path distance d is greater than 6 km., and if the combined incident angle θ_{ic} is equal to or less than 1.595 radians, then the lesser of the RTE combined or diffraction mode results apply, and reveal the horizon transition point. If the path distance d is past 6 km., and if θ_{ic} is greater than 1.595 radians, then the path is beyond the horizon; diffraction mode results apply.

Combining the Results for the Deterministic Approximations Solution: The last step is to add any optional Two-Ray multipath attenuation, A_{2R}, and the Free Space Loss (or Dispersion), to the non-free-space attenuation computed above, with frequency compensation included, to obtain the total predicted attenuation:

$$A_{TOT} = A_{RTE\text{-}AC} \text{ or } A_{RTE\text{-}BC} \text{ or } A_{DIFF}) + A_{2R} + FS \quad (65)$$

For a P.1456-2 land path, A_{2R}, the multipath attenuation, = 0. The equation then becomes:

$$A_{TOT} = A_{(RTE \text{ or } DIFF)[+FC]} + FSL. \quad (66)$$

The additional considerations given in P.1546-2 for special cases may then be applied to the attenuation results, and to determine field strength for a transmitted power of 1 kilowatt ERP:

$$E = 106.9 - A_{TOT} \quad (67)$$

Summary: The above deterministic and deterministic-based approximation equations, when implemented using the described methodology as a computational engine on a computer spreadsheet or in a computer program, adequately duplicate for general use, the results obtained from ITU-P.1546-2 for over-land paths, requiring only the input of four variables: the frequency, the transmitter height, the total path distance, and the receiver height. Besides providing a useful, practical tool; it is a proof of concept for the unified Beer's Law-based foundation and Snell's Law geometrical framework embodied within. The deterministic nature of the work allows extension to circumstances beyond the parameters of P.1546-2. This unified framework, as used here to assemble and analyze the various puzzle pieces of radio propagation theory, can also provide a foundation and framework for further study.

References:

1. "Grazing Behavior of Scatter and Propagation Above Any Rough Surface" by Donald Barrick. IEEE Transactions On Antennas and Propagation, Jan.1998.
2. "A Transport Theory of Millimeter Wave Propagation in Woods and Forests", by R. A. Johnson and F. Schwering, Center for Communications Systems. Research and Development Technical Report CECOM-TR-85-1, U. S. Army Communications-Electronics Command, February 1985.
3. "A Generic Model of 1-60 GHz Radio Propagation through Vegetation – Final Report" by N.C. Rogers, A Seville, J Richter, D Ndzi, N. Savage, RFS Caldeirinha, A.K. Shukla, M.O. Al-Nuaimi, K. Craig, E. Vilar and J. Austin. Prepared by Dr. Neil Rogers, Principal Investigator, OinetiQ, for a consortium comprised of QinetiQ, the Rutherford Appleton Laboratory, and the Universities of Portsmouth and Glamorgan, for the U. K. Radiocommunications Agency. First Issue, May 2002.
4. "Transmission Loss Predictions for Tropospheric Communications Circuits", Volume I, National Bureau of Standards Technical Note 101, Revised January, 1967, by P.L. Rice, A. G. Longley, K.A. Norton, and A.P. Barsis, Institute for Telecommunications Sciences and Astronomy, U. S. Dept. of Commerce National Telecommunications and Information Administration.
5. ITU Recommendations P.453-07, 1999; P.530-7, 1997; P.833-2, 1999; and P.1546-2, 2005.
6. "Prediction of Tropospheric Radio Transmission Loss Over Irregular Terrain, A Computer Method – 1968" ESSA Technical Report ERL 79 – ITS 67, by A. G. Longley and P.L. Rice, Institute for Telecommunications Sciences, U. S. Dept. of Commerce National Telecommunications and Information Administration.
7. "Radiowave Propagation along Mixed Path in Forest Environment", IEEE Transactions on Antennas and Propagation, T. Tamir, Vol.25, No.4, Nov. 1977.

Revised January 25, 2008.
Copyright © January 2008 by Sid Shumate and Givens and Bell, Inc. All rights reserved except that permission is granted for open publication with full content unmodified, by the National Institute of Standards and Technology, Dept. of Commerce, USA, as per the terms and conditions for presentation before the 10th International Symposium on Advanced Radio Technologies, 2-4 June 2008, in Boulder, Colorado.