Motorola Solutions, Inc.
1455 Pennsylvania Avenue, NW, Suite 900
Washington, DC 20004
USA

March 18, 2011

Marlene H. Dortch
Secretary
Federal Communications Commission
445 12th Street, S.W.
Washington, DC 20554

Re: PS Docket No. 06-229
Notice of *Ex Parte* Presentation

Dear Ms. Dortch:

On Thursday, March 17, Stu Overby, Mark Poulin, Gino Scribano, and Sam Makhlouf from Motorola Solutions, Inc, met with staff from the Commission in a meeting with multiple equipment manufacturers arranged by the Public Safety and Homeland Security Bureau (PSHSB) regarding technical issues surrounding the 700 MHz public safety broadband proceeding. The Commission staff present at the meeting included Jennifer Manner, Behzad Ghaffari, Pat Amodio, Brian Hurley, Jason Kim, Yoon Chang, Kurian Jacob, Erika Olsen and Henning Schulzrinne of the PSHSB, Ziad Sleem of the Wireless Telecommunications Bureau, and Michael Ha of the Office of Engineering and Technology.

During the meeting, representatives from each of seven equipment manufacturers made a presentation and the group engaged in a question and answer session led by the Commission staff. A copy of the Motorola Solutions, Inc. presentation is attached.

Pursuant to Section 1.1206 of the Commission's rules, a copy of this letter is being filed electronically in the above referenced docket.

Respectfully Submitted,

/s/ Stu Overby
Stu Overby
Senior Director, Global Spectrum Strategy
Motorola Solutions, Inc
1301 East Algonquin Road
Schaumburg, IL 60196
847-576-2952

CC: FCC Participants (via email)

4TH NPRM RF PERFORMANCE CONSIDERATIONS AND COMMENTS

Sam Makhlouf
Principal Systems Engineer
Public Safety Broadband Systems Engineering
Motorola Solutions

4th NPRM Tentative Conclusions

- The following tentative conclusions are presented in paragraph 61
  - "… tentatively conclude that we should require public safety broadband networks to provide outdoor coverage at minimum data rates of 256 Kbps uplink (UL) and 768 Kbps downlink (DL) for all types of devices, for a single user at the cell edge."
  - "… further tentatively conclude that as part of its initial design, each network must provide the minimum data rates based on a sector loading of seventy percent throughout the entire network."

RF Performance Background

- Cell edge data rates are a function of cell edge SINR, which is influenced by many factors
  - Inter-site distance
  - eNB antenna heights
  - Environment
  - Interference due to system loading

- Public safety organizations have various geographical and economic constraints and require deployment flexibility for their broadband networks

Clarify Data Rate Requirement

- Interface used for data rate measurement
  - Text states: "*The data rate in this context is measured and defined as the physical layer provided rate with less than or equal to a 10% block error rate.*"
  - We assume that the data rates defined in the 4th NPRM are measured at the "lower layer" demarcation point shown in the figure below, taken from 3GPP TS 36.321 (Figure 4.2.1.1)
  - This approach leaves room for interpretation when mapping to application-layer data rate that impacts user experience

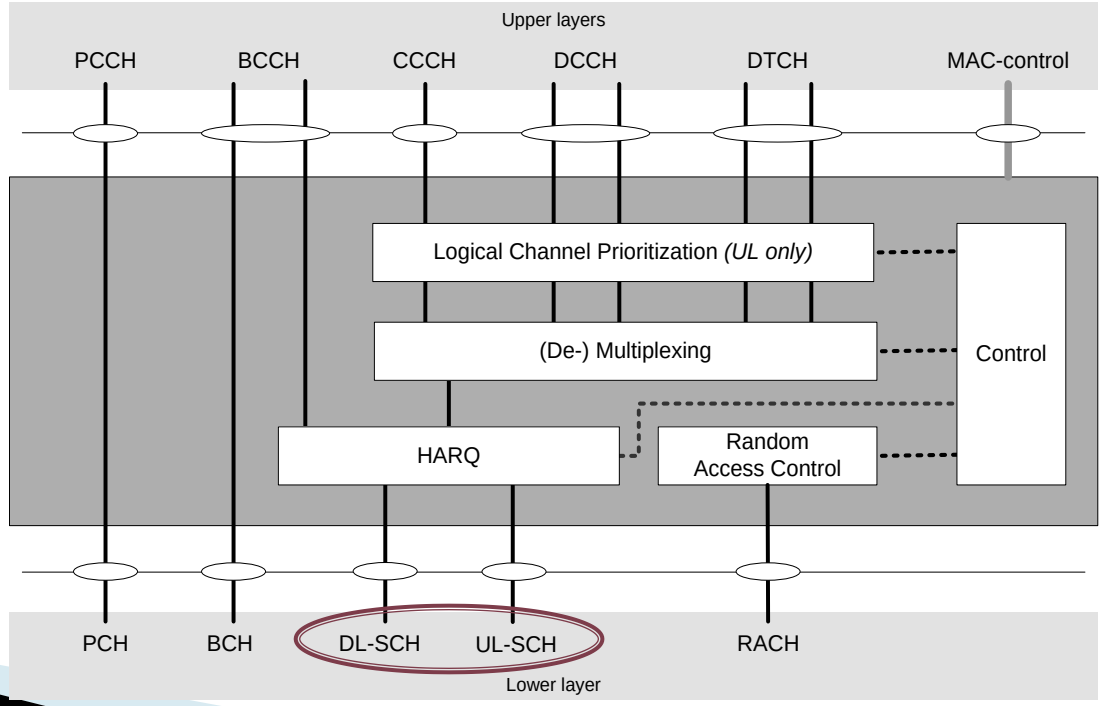

Clarify Loading Requirement

- What is baseline reference for sector loading?
  - How is loading defined in the context of interference mitigation techniques?
    - We assume that sector loading assumptions must be relative to the available resources which may be limited by interference mitigation schemes
  - What is the assumed resource allocation to a single user in the cell under study?
    - We assume that while the sector loading assumption is used to define neighbor-cell interference, all available resources may be allocated to a single user when measuring that user's cell edge data rate

Recommended Changes to Data Rate Definition

- Data rate should be defined at the application layer
- Leverage industry standard test methodology document
  - TIA TSB-88 "Wireless Communications Systems Performance in Noise and Interference Limited Situations"
- TSB-88 can be enhanced with LTE performance validation parameters
  - Motorola Solutions is willing to lead this effort

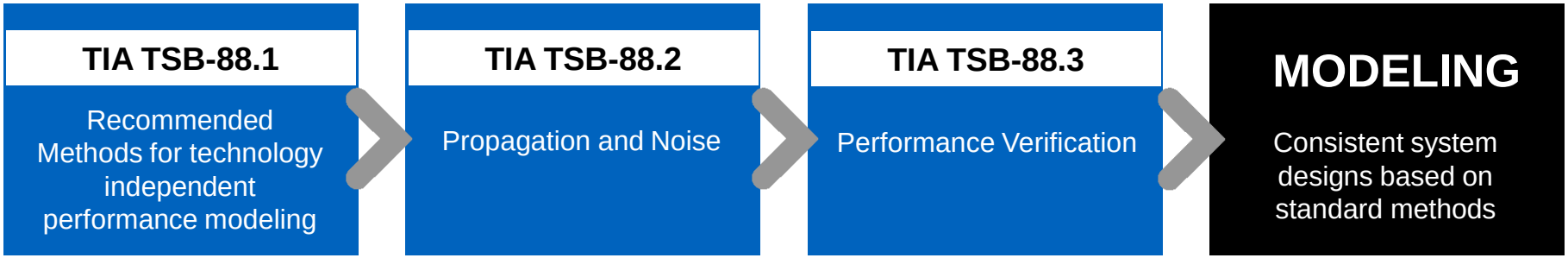

Recommended Changes to Loading Requirement

- Paragraph 62 asks
  - "Is it acceptable to use seventy percent loading per sector (both UL and DL)?"
  - "Should we use Section 3.2 of the NPSTC Statement of Requirements document as a reference for assumed traffic loading for various applications?"
- Sector loading stipulation should accommodate each unique network design
  - Fixed sector loading assumption (e.g. seventy percent) is not applicable for all agencies
  - Section 3.2 of NPSTC SoR could be used to map agency-specific application usage profile to throughput for each category of user
  - System loading profile is then based on per-user throughput and user / site density as defined for each agency
- Proposed alternative requirement text:
  - "… further tentatively conclude that as part of its initial design, each network must provide the minimum data rates while supporting its designed loading profile."

- ***Minimum cell-edge data rates are met given each system's target usage and loading profile rather than based on a fixed sector loading assumption***

4TH NPRM PLMN ID USAGE CONSIDERATIONS AND COMMENTS

Gino Scribano
Distinguished Member of Technical Staff
Public Safety Broadband Systems Architecture
Motorola Solutions

Single Nationwide PLMN ID Usage

- Clarification of paragraph 32 – interpretation of a single nationwide PLMN ID
  1. Single nationwide PLMN is used as a pseudonym, and does not correspond to an actual network
     a. Used as a 'shortcut' to reduce the size of roaming lists in UE's
     b. Used only within Public Safety 700 MHz broadband networks
     c. Outside of 3GPP standards
     d. PLMN ID is not exposed to commercial carrier networks
  2. Single nationwide PLMN is used as an actual network identifier, per 3GPP standards, corresponding to an actual network
     a. Used to identify logical "network domains"
        i. Administrative domain
        ii. Subscriber home domain
        iii. Billing domain
        iv. Network element identifier domain
     b. Leverages network wide functions and/or resources shared among Public Safety networks
     c. PLMN ID is exposed to commercial carrier networks for roaming and billing
- The following analysis assumes interpretation #2
  - Single nationwide PLMN identifies an actual nationwide shared network

Architecture Comparison

Interoperable Regional Architecture

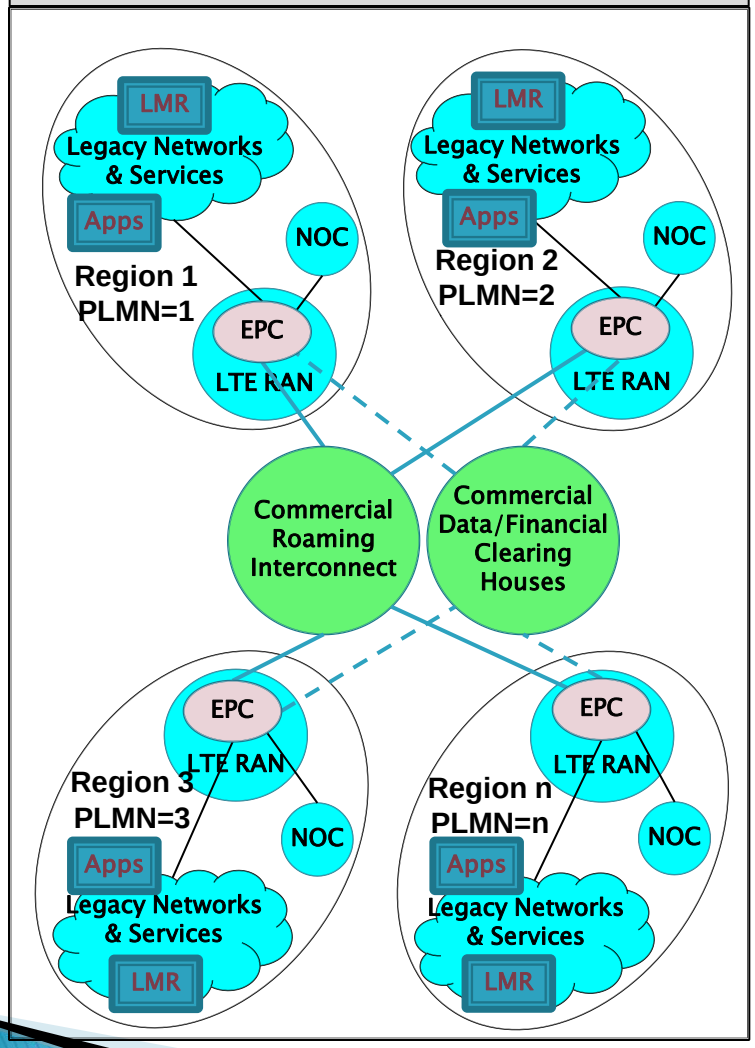

Nationwide Network Architecture

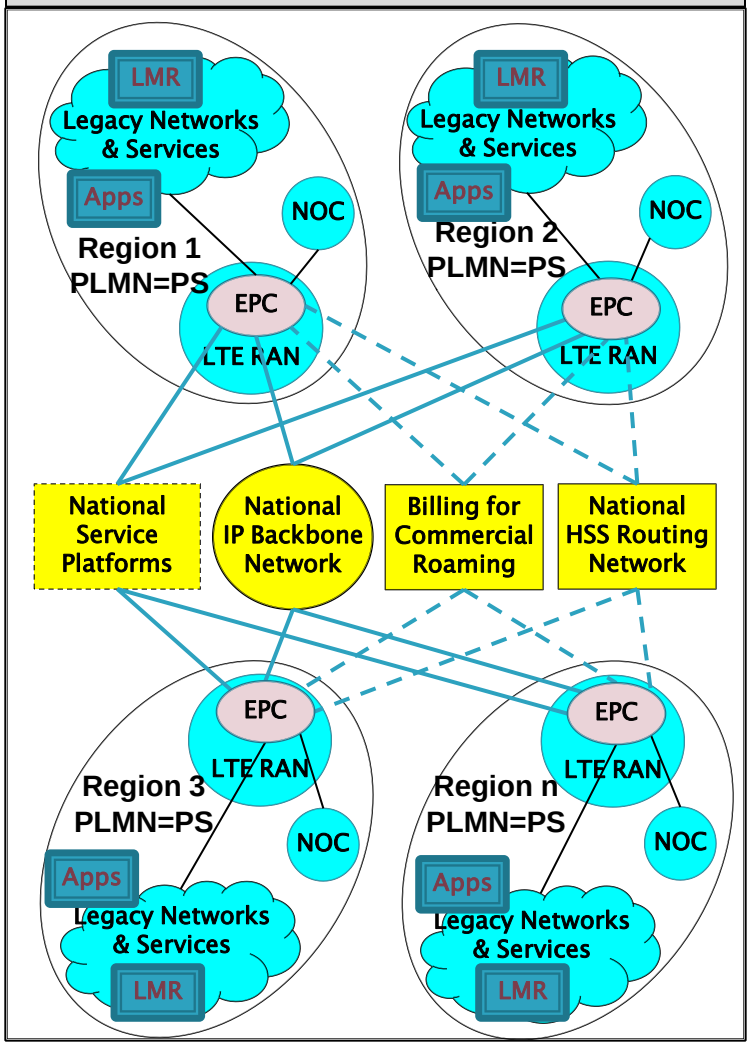

Architecture Tradeoffs

Attribute	Interoperable Regional Architecture	Nationwide Network Architecture

Inter-operability	• Requires roaming among regional Public Safety networks and with Commercial Carriers
	  • Inter-network interoperability implemented according to 3GPP/GSMA roaming standards
		• Eliminates roaming among Public Safety networks
		  • Inter-network interoperability not addressed by 3GPP/GSMA standards; implementation realm
		• Only roaming with Commercial Carriers

Organi-zational	• Leverage existing regional & local organizations
	• Limited coordination required across regional organizations
	  • Well defined roaming agreements & interfaces
	  • RF planning & handover interfaces across adjacent coverage areas
	• Requires regional interoperable planning
		• Requires new nationwide organizations
		  • Nationwide network planning
		  • Network operations & maintenance
		  • Nationwide billing & financial clearing
		• Requires coordination & cooperation across national and regional organizations

Operational	• Independent network planning across regions
	• Network coordination limited to regions with adjacent coverage areas
		• Requires centralized or coordinated SIM card production
		• Requires centralized billing and financial settlements across PS and Commercial Carriers
		• Requires partitioning, allocation and management of ID's qualified by PLMN
		  • IMSI partitioning
		  • Tracking Area Identifiers (TAI)
		  • eNB global cell IDs (ECGI)
		• Operational <u>before</u> regional network deployments

QoS Control	• QoS policy control via regional/local PCRF and HSS subscription profile update
	  • Requires nationwide QoS <u>framework</u>
	• Standardized roaming features enable access control in visited networks
		• QoS policy control via regional/local PCRF w/o HSS subscription update
		  • Requires nationwide QoS <u>specification</u>
		• No standardized mechanisms to restrict access and usage across regional networks
		  • All users belong to one network

THANK YOU

MOTOROLA, MOTOROLA SOLUTIONS and the Stylized M Logo are trademarks or registered trademarks of Motorola Trademark Holdings, LLC and are used under license. All other trademarks are the property of their respective owners. ©2011 Motorola Solutions, Inc. All rights reserved.

BACKUP

NPSTC SoR Application Data Rates

- Assumed 2x10 MHz LTE Partnership
  - "Average Edge Throughput" data rates based on morphology

Application/Service	Description	Data Rate[7]
File transfer	i.e. to download such items as high-resolution images, GIS data, etc.	Greater than 256kb/s
Email		Less than 16kb/s
Web browsing		Greater than 32kb/s
Cellular voice	Analogous to today's cellular system capability.	4-25 kb/s
Push to talk voice	Analogous to commercial offerings, but coupled with group call capability.	4-25 kb/s
Indoor video	Indoor video is video that is transmitted from inside a building, whether it is surveillance or tactical video.	20-384 kb/s[8]
Outdoor video	Outdoor video is video that is transmitted from the street, whether it is surveillance or tactical video.	32-384 kb/s[8]
Location services	This includes location services for personnel as well as vehicles and other objects that public safety tracks.	Less than 16kb/s
Database transactions	This includes both remote databases (data that is not under the agency's direct control), as well as databases that are local.	Less than 32kb/s
Messaging	Instant messaging and SMS type services, both one-way and two-way.	Less than 16kb/s
Operations data	This is a catch all for data that deals with the operations and maintenance of the network, i.e. over the air programming, remote client management, etc.	Less than 32kb/s
Dispatch data	This area primarily covers data as it relates to computer aided dispatching.	Less than 64kb/s

Table 5.2 – 1 Outdoor, single user minimum throughput

The network shall support the following link budget: Morphology	In-Building Penetration Margin	Coverage Availability	Sector Loading Sector is loaded to this level of traffic	Forward Link Throughput • On street • Single user • Average edge throughput	Reverse Link Throughput • On street • Single user • Average edge throughput
Dense Urban	22 dB	95%	70%	1000 kbps	256 kbps
Urban	19 dB	95%	70%	1000 kbps	256 kbps
Suburban	13 dB	95%	70%	512 kbps	128 kbps
Rural	6 dB	95%	70%	512 kbps	128 kbps
Highway	6 dB	95%	70%	128 kbps	64 kbps

Table 5.2 – 2 Outdoor, sector aggregate (multiple users) throughput

The network shall support the following link budget: Morphology	In-Building Penetration Margin	Coverage Availability	Sector Loading Sector is loaded to this level of traffic	Average Sector Aggregate Forward Link Throughput	Average Sector Aggregate `Reverse Link Throughput
Dense Urban	22 dB	95%	70%	5000 kbps	1600 kbps
Urban	19 dB	95%	70%	4600 kbps	1400 kbps
Suburban	13 dB	95%	70%	3700 kbps	1200 kbps
Rural	6 dB	95%	70%	2400 kbps	800 kbps
Highway	6 dB	95%	70%	2400 kbps	800 kbps