# Adirondack Champlain Telemedicine Information Network (ACTION)
# July 30, 2011
# Quarterly Data Report #13

Changes and/or additions made in Quarter 13 (or previous quarters, when applicable) and items that do not currently apply, are in red.

## 1. Project Contact and Coordination Information

### a. Identify the project leader(s) and respective business affiliations.

Michael Edwin Simpson, Director
Sponsored Research & Programs
SUNY Plattsburgh

Robert P. Hunt, Associate Project Coordinator
Regional Telemedicine Program Manager
Fort Drum Regional Health Planning Organization

### b. Provide a complete address for postal delivery and the telephone, fax, and e-mail address for the responsible administrative official.

**101 Broad Street**
**Plattsburgh, NY 12901**
**Phone – (518) 564-2155**
**Fax – (518) 564-2157**
**E-mail – simpsome@plattsburgh.edu**

### c. Identify the organization that is legally and financially responsible for the conduct of activities supported by the award.

**The Research Foundation of State University of New York**
**35 State Street**
**Albany, New York 12207**

### d. Explain how project is being coordinated throughout the state or region.

The Research Foundation of the State University of New York College at Plattsburgh is providing the project coordination and regional/state coordination.

## 2. Identify all health care facilities included in the network.

### a. Provide address (including county), zip code, Rural Urban Commuting Area (RUCA) code (including primary and secondary), six-digit census tract, and phone number for each health care facility participating in the network.

Detailed address/location information for all health care facilities included in the ACTION network is provided in Table 1. The list of locations was expanded per the Change of Scope submitted to USAC, and approved, in December 2010.
In Quarter 12 one of the original sites, The Moreau Health Center, was removed from the ACTION network. Glens Falls Hospital (GFH) leased space from Hudson Headwaters for an x-ray and blood draw site. GFH confirmed they removed their equipment from this location

on 1/4/2008 and that the lab left the location on 3/32/2010. GFH is now working on getting this location removed from their Operating Certificate.

In Quarter 12 it was discovered that the address information for Main Street Physical Therapy and Saratoga Physician's Practice was incorrect. The correct address for Main Street Physical Therapy is: 17 Main Street, Queensbury, NY 12804. The correct address for Saratoga Physician's Practice is: 1 West Ave., Suite 305, Saratoga Springs, NY 12866.

In Quarter 13 USAC determined that the AMC – Uihlein Skilled Nursing Facility, at 185 Old Military Road, Lake Placid, NY was ineligible to participate in the Rural Healthcare Pilot Program. This location has been removed from the ACTION network.

**Table 1. Adirondack Champlain Telemedicine Information Network (ACTION) Participating Sites - Location Information**

| Site | Organization | Address | County | City | Zip Code | RUCA |
|---|---|---|---|---|---|---|
| 1 | Adirondack Medical Center | 2233 State Route 86 | Franklin | Saranac Lake | 12983 | 7 |
| 2 | Lake Placid Health Center | 29 Church Street | Essex | Lake Placid | 12946 | 7 |
| 3 | AMC Uihlein Skilled Nursing Facility | | | | | |
| 4 | Mountain Health Center | 2841 State Route 73 | Essex | Keene | 12942 | 10 |
| 5 | Tupper Lake Health Center | 7 Stetson Road | Franklin | Tupper Lake | 12986 | 7 |
| 6 | Renal Dialysis and Sports Medicine & Rehabilitation | 114 Wawbeek Avenue | Franklin | Tupper Lake | 12986 | 7 |
| 7 | Elizabethtown Community Hospital | 75 Park Street | Essex | Elizabethtown | 12932 | 10 |
| 8 | Elizabethtown Community Health Center (ECHC) | 66 Park Street | Essex | Elizabethtown | 12932 | 10 |
| 9 | Westport Health Center (WHC) | 6097 NYS Route 9N | Essex | Westport | 12993 | 10 |
| 10 | High Peaks Health Center (HPHC) | 7 Community Circle | Essex | Wilmington | 12967 | 8 |
| 11 | Alice Hyde Medical Center | 133 Park Street | Franklin | Malone | 12953 | 4 |
| 12 | Bessette Health Center | 6087 State Route 11 | Franklin | Chateaugay | 12920 | 10.2 |
| 13 | Dwyer Health Center | 969 Route 11 | Franklin | Moira | 12957 | 5 |
| 14 | Salmon River Health Center | 577 County Route 1 | Franklin | Fort Covington | 12937 | 10.5 |
| 15 | Tower Health Center | North Main Street | Franklin | St. Regis Falls | 12980 | 10.5 |
| 16 | CVPH Medical Center | 75 Beekman Street | Clinton | Plattsburgh | 12901 | 4 |
| 17 | CVPH Ambulatory Surgery Center | 77 Plaza Boulevard | Clinton | Plattsburgh | 12901 | 4 |
| 18 | CVPH Sports Med and Rehab Center at PARC | 295 New York Road | Clinton | Plattsburgh | 12903 | 4 |
| 19 | CVPH Dialysis Satellite at ECH | 75 Park Street | Essex | Elizabethtown | 12932 | 10 |
| 20 | CVPH Medical Center Rehabilitation Services | 179 Tom Miller Road | Clinton | Plattsburgh | 12901 | 4 |
| 21 | Massena Memorial Hospital | One Hospital Drive | St. Lawrence | Massena | 13662 | 4 |
| 22 | Brasher Falls Family Health Center | 3 Cudlipp Drive | St. Lawrence | Brasher Falls | 13613 | 6 |
| 23 | Norfolk Family Health Center | 42 West Main Street | St. Lawrence | Norfolk | 13667 | 5 |
| 24 | Massena Memorial Hospital Dialysis Center | 290 Main Street | St. Lawrence | Massena | 13662 | 4 |
| 25 | Inter-Lakes Health | 1019 Wicker Street | Essex | Ticonderoga | 12883 | 7 |
| 26 | Glens Falls Hospital | 100 Park Street | Warren | Glens Falls | 12801 | 1 |
| 27 | Advanced Imaging at Baybrook | 22 Willowbrook Road | Warren | Queensbury | 12804 | 1 |
| 28 | Evergreen Health Center-Radiology Ext. Clinic | Evergreen Plaza, 13 Palmer Avenue | Saratoga | Corinth | 12822 | 7.3 |
| 29 | Glens Falls Hospital Broad Street Campus | 2 Broad Street | Warren | Glens Falls | 12801 | 1 |
| 30 | Behavioral Health Services/Ridge Commons | 1 Lawrence Street | Warren | Glens Falls | 12801 | 1 |
| 31 | Fort Edward Family Medicine | 327 Broadway | Washington | Fort Edward | 12828 | 1 |
| 32 | Granville Health Center | 79 North Street | Washington | Granville | 12832 | 7.3 |
| 33 | Cambridge Family Health Center | 35 Gilbert Street | Washington | Cambridge | 12816 | 10.4 |
| 34 | GFH Outpatient Renal Dialysis Center | 3 Broad Street | Warren | Glens Falls | 12801 | 1 |
| 35 | Greenwich Family Health Center | 1112 County Route 29 | Washington | Greenwich | 12834 | 3 |
| 36 | Center for Recovery | 101 Ridge Street | Warren | Glens Falls | 12801 | 1 |
| 37 | GFH Sleep Lab | 92 Broad Street | Warren | Glens Falls | 12801 | 1 |
| 38 | Hill Condy Family Practice | 19 West Avenue | Saratoga | Saratoga Springs | 12866 | 1.1 |
| 39 | Hoosick Falls Family Health Center | 16 Danforth Street | Rensselaer | Hoosick Falls | 12090 | 7.4 |
| 40 | Moreau Health Center Pinewood Professional Park | | | | | |
| 41 | The Medical Center at Wilton | 123 North Road | Saratoga | Gansevoort | 12831 | 1.1 |
| 42 | Hudson Falls Internal Medicine | 325 Main Street | Washington | Hudson Falls | 12839 | 1 |
| 43 | Salem Family Health Center | 213 Main Street | Washington | Salem | 12865 | 10.4 |
| 44 | The Rehab Center & The Hearing Center | 25 Willowbrook Road | Warren | Queensbury | 12804 | 1 |
| 45 | Main Street Physical Therapy | 17 Main Street | Warren | Glens Falls | 12801 | 1 |
| 46 | Saratoga Physician's Practice | 1 West Medical Plaza | Saratoga | Saratoga Springs | 12866 | 1.1 |
| 47 | Whitehall Health Center | 65 Poultney Street | Washington | Whitehall | 12887 | 10.4 |
| 48 | The Center for Recovery | 340 Main Street | Washington | Hudson Falls | 12839 | 1 |
| 49 | Wilton Health Services | 11 Carpenter Lane | Saratoga | Wilton | 12866 | 1.1 |
| 50 | St. Regis Mohawk Tribe Health Services | 412 State Route 37 | Franklin | Akwesasne | 13655 | 6 |

**b. For each participating institution, indicate whether it is:**

**i. Public or non-public;**

ii. **Not-for-profit or for-profit;**
iii. **An eligible health care provider or ineligible health-care provider with an explanation of why the health care facility is eligible under section 254 of the 1996 Act and the Commission's rules or a description of the type of ineligible health care provider entity.**

Detailed eligibility information for all health care facilities included in the ACTION network is provided below in Table 2. Two sites have been removed, one in Quarter 12 (The Moreau Health Center) and the other in Quarter 13 (AMC – Uihlein Skilled Nursing Facility); two sites (Main Street Physical Therapy and Saratoga Physician's Practice) have updated address information in Quarter 12.

**Table 2. Adirondack Champlain Telemedicine Information Network (ACTION) Participating Sites - Eligibility Information**

| Site | Organization | Address | City | Zip Code | Public or Non-Public | Not-for-Profit or For-Profit | Eligibility Criteria: NYS Operating Certificate |
|---|---|---|---|---|---|---|---|
| 1 | Adirondack Medical Center | 2233 State Route 86 | Saranac Lake | 12983 | Non-Public | Not-for-Profit | 1623001H |
| 2 | Lake Placid Health Center | 29 Church Street | Lake Placid | 12946 | Non-Public | Not-for-Profit | 1623001H |
| 3 | AMC Uihlein Skilled Nursing Facility **DELETED** | | | | | | |
| 4 | Mountain Health Center | 2841 State Route 73 | Keene | 12942 | Non-Public | Not-for-Profit | 1623001H |
| 5 | Tupper Lake Health Center | 7 Stetson Road | Tupper Lake | 12986 | Non-Public | Not-for-Profit | 1623001H |
| 6 | Renal Dialysis and Sports Medicine & Rehabilitation | 114 Wawbeek Avenue | Tupper Lake | 12986 | Non-Public | Not-for-Profit | 1623001H |
| 7 | Elizabethtown Community Hospital | 75 Park Street | Elizabethtown | 12932 | Non-Public | Not-for-Profit | 1552701C |
| 8 | Elizabethtown Community Health Center (ECHC) | 66 Park Street | Elizabethtown | 12932 | Non-Public | Not-for-Profit | 1552701C |
| 9 | Westport Health Center (WHC) | 6097 NYS Route 9N | Westport | 12993 | Non-Public | Not-for-Profit | 1552701C |
| 10 | High Peaks Health Center (HPHC) | 7 Community Circle | Wilmington | 12967 | Non-Public | Not-for-Profit | 1552701C |
| 11 | Alice Hyde Medical Center | 133 Park Street | Malone | 12953 | Non-Public | Not-for-Profit | 1624000H |
| 12 | Bessette Health Center | 6087 State Route 11 | Chateaugay | 12920 | Non-Public | Not-for-Profit | 1624000H |
| 13 | Dwyer Health Center | 969 Route 11 | Moira | 12957 | Non-Public | Not-for-Profit | 1624000H |
| 14 | Salmon River Health Center | 577 County Route 1 | Fort Covington | 12937 | Non-Public | Not-for-Profit | 1624000H |
| 15 | Tower Health Center | North Main Street | St. Regis Falls | 12980 | Non-Public | Not-for-Profit | 1624000H |
| 16 | CVPH Medical Center | 75 Beekman Street | Plattsburgh | 12901 | Non-Public | Not-for-Profit | 0901001H |
| 17 | CVPH Ambulatory Surgery Center | 77 Plaza Boulevard | Plattsburgh | 12901 | Non-Public | Not-for-Profit | 0901001H |
| 18 | CVPH Sports Med and Rehab Center at PARC | 295 New York Road | Plattsburgh | 12903 | Non-Public | Not-for-Profit | 0901001H |
| 19 | CVPH Dialysis Satellite at ECH | 75 Park Street | Elizabethtown | 12932 | Non-Public | Not-for-Profit | 0901001H |
| 20 | CVPH Medical Center Rehabilitation Services | 179 Tom Miller Road | Plattsburgh | 12901 | Non-Public | Not-for-Profit | 0901001H |
| 21 | Massena Memorial Hospital | One Hospital Drive | Massena | 13662 | Non-Public | Not-for-Profit | 4402000H |
| 22 | Brasher Falls Family Health Center | 3 Cudlipp Drive | Brasher Falls | 13613 | Non-Public | Not-for-Profit | 4402000H |
| 23 | Norfolk Family Health Center | 42 West Main Street | Norfolk | 13667 | Non-Public | Not-for-Profit | 4402000H |
| 24 | Massena Memorial Hospital Dialysis Center | 290 Main Street | Massena | 13662 | Non-Public | Not-for-Profit | 4402000H |
| 25 | Inter-Lakes Health | 1019 Wicker Street | Ticonderoga | 12883 | Non-Public | Not-for-Profit | 1564701C |
| 26 | Glens Falls Hospital | 100 Park Street | Glens Falls | 12801 | Non-Public | Not-for-Profit | 5601000H |
| 27 | Advanced Imaging at Baybrook | 22 Willowbrook Road | Queensbury | 12804 | Non-Public | Not-for-Profit | 5601000H |
| 28 | Evergreen Health Center-Radiology Ext. Clinic | Evergreen Plaza, 13 Palmer Ave. | Corinth | 12822 | Non-Public | Not-for-Profit | 5601000H |
| 29 | Glens Falls Hospital Broad Street Campus | 2 Broad Street | Glens Falls | 12801 | Non-Public | Not-for-Profit | 5601000H |
| 30 | Behavioral Health Services/Ridge Commons | 1 Lawrence Street | Glens Falls | 12801 | Non-Public | Not-for-Profit | 5601000H |
| 31 | Fort Edward Family Medicine | 327 Broadway | Fort Edward | 12828 | Non-Public | Not-for-Profit | 5601000H |
| 32 | Granville Health Center | 79 North Street | Granville | 12832 | Non-Public | Not-for-Profit | 5601000H |
| 33 | Cambridge Family Health Center | 35 Gilbert Street | Cambridge | 12816 | Non-Public | Not-for-Profit | 5601000H |
| 34 | GFH Outpatient Renal Dialysis Center | 3 Broad Street | Glens Falls | 12801 | Non-Public | Not-for-Profit | 5601000H |
| 35 | Greenwich Family Health Center | 1112 County Route 29 | Greenwich | 12834 | Non-Public | Not-for-Profit | 5601000H |
| 36 | Center for Recovery | 101 Ridge Street | Glens Falls | 12801 | Non-Public | Not-for-Profit | 5601000H |
| 37 | GFH Sleep Lab | 92 Broad Street | Glens Falls | 12801 | Non-Public | Not-for-Profit | 5601000H |
| 38 | Hill Condy Family Practice | 19 West Avenue | Saratoga Springs | 12866 | Non-Public | Not-for-Profit | 5601000H |
| 39 | Hoosick Falls Family Health Center | 16 Danforth Street | Hoosick Falls | 12090 | Non-Public | Not-for-Profit | 5601000H |
| 40 | Moreau Health Center Pinewood Prof. Park **DELETED** | | | | | | |
| 41 | The Medical Center at Wilton | 123 North Road | Gansevoort | 12831 | Non-Public | Not-for-Profit | 5601000H |
| 42 | Hudson Falls Internal Medicine | 325 Main Street | Hudson Falls | 12839 | Non-Public | Not-for-Profit | 5601000H |
| 43 | Salem Family Health Center | 213 Main Street | Salem | 12865 | Non-Public | Not-for-Profit | 5601000H |
| 44 | The Rehab Center & The Hearing Center | 25 Willowbrook Road | Queensbury | 12804 | Non-Public | Not-for-Profit | 5601000H |
| 45 | Main Street Physical Therapy | 17 Main Street | Queensbury | 12804 | Non-Public | Not-for-Profit | 5601000H |
| 46 | Saratoga Physician's Practice | 1 West Ave., Suite 305 | Saratoga Springs | 12866 | Non-Public | Not-for-Profit | 5601000H |
| 47 | Whitehall Health Center | 65 Poultney Street | Whitehall | 12887 | Non-Public | Not-for-Profit | 5601000H |
| 48 | The Center for Recovery | 340 Main Street | Hudson Falls | 12839 | Non-Public | Not-for-Profit | 5601000H |
| 49 | Wilton Health Services | 11 Carpenter Lane | Wilton | 12866 | Non-Public | Not-for-Profit | 5601000H |
| 50 | St. Regis Mohawk Tribe Health Services | 412 State Route 37 | Akwesasne | 13655 | Non-Public | Not-for-Profit | 1653200R |

**3. Network Narrative: In the first quarterly report following the completion of the competitive bidding process and the selection of vendors, the selected participant must submit an updated technical description of the communications network that it intends to implement, which takes into account the results its network design studies and negotiations with its vendors. This technical description should provide, where applicable:**

**a. Brief description of the backbone network of the dedicated health care network, e.g., MPLS network, carrier-provided VPN, a SONET ring;**

The Development Authority of the North Country (DANC) will provide ACTION with a 100% fiber optic solution that will serve the bandwidth needs of ACTION members, both now and in the future. The core network consists of two (2) Carrier Ethernet rings (East-West ring and North-South ring) which are interconnected in Plattsburgh, New York. The East-West ring serves St. Lawrence, Franklin and parts of Clinton and Essex counties. The North-South ring serves the remaining sites in Clinton and Essex counties and also serves member locations in Saratoga and Warren counties. The rings are interconnected in Plattsburgh, New York via redundant Gigabit Ethernet links bonded together for an aggregate throughput of 2 Gbps. This setup allows us to scale from 2 Gbps up to 8 Gbps for additional redundancy.

Each ring has multiple Point-of-Presence (POP) locations which serve as aggregation points for ACTION member locations. POP's are controlled environments used by telecommunications service providers that provide a secure location to house network access equipment and serve customers. From these POP's fiber is extended to each member location and terminated at the customer premise in a fiber distribution panel (FDP). Each member location will also be equipped with a Layer 2 Ethernet switch and a Fortinet firewall appliance. To provide an additional level of protection, DANC has included an uninterruptible power supply (UPS) at each member location at no additional charge.

The network will provide two (2) primary VLAN's, one which will provide connectivity from any member site to any other member site, and one which will provide a dedicated public Internet connection.

In addition to providing ACTION with public Internet connectivity that far exceeds the minimum rate requested, the connection being provided also offers exceptional redundancy. The proposed Internet connection provides a blended service of three (3) Tier 1 ISP's (Level 3, Cogent and Global Crossing) with diverse connections to each ensuring that the loss of one ISP for any reason does not impact ACTION member public Internet service.

**b. Explanation of how health care provider sites will connect to (or access) the network, including the access technologies/services and transmission speeds;**

The broadband architecture for this proposal is a distributed Ethernet switched platform that consists of two (2) core Ethernet rings interconnected with redundant physical interfaces. This network approach provides the resiliency, speed and scalability that will be required by ACTION. The proposed network consists of many Point-of-Presence (POP) locations where we will aggregate traffic for transmission to other ACTION member facilities or to the Internet. These POP locations also offer an access point for third party service providers and networks. Additionally, the proposed private network solution will have a presence in the Syracuse and Albany carrier hotels, which will provide ACTION with access to nearly every carrier serving Upstate New York. Please refer to Appendix 1 at the end of this proposal to review network diagrams that illustrate both our physical

and logical network design. We have also included a typical customer premise equipment drawing that can be found in Appendix 2.

To provide the most cost effective access to all 49 participants, DANC will utilize multiple local service provider networks to connect ACTION member locations throughout the region. Our working relationships with ION, Westelcom, PrimeLink, Tech Valley and SLIC Network Solutions will allow us to provide a solution that minimizes CAPEX and greatly improves service delivery and implementation timelines. Additionally, DANC will also leverage the American Recovery and Reinvestment Act (ARRA) grant that it was recently awarded to help offset the costs associated with providing this service. Although we will use other parties to deliver service to some locations, DANC will be the single-point-of-contact for ACTION members so the use of multiple service providers as sub-contractors will be transparent.

Each ACTION member site will be provided with a dedicated Ethernet private line service via their local loop provider, which is transported to a Point-of-Presence (POP) aggregation site. POP aggregation sites are tied together via large capacity IP and DWDM long haul rings and provide connectivity to other sites not in the local area. Using VLAN tags as a separation of service, Intranet and Internet traffic can be identified, separated and routed accordingly to the proper termination end-points. The initial offer is to utilize two (2) VLANs, one to tag public Internet traffic and one to carry private Intranet traffic.

Internet traffic will be transported from each site location to an Internet gateway utilizing an Ethernet Virtual Private Line service over a MPLS network. This will insure that each ACTION site has a direct link to the Internet.

Intranet connections will be contained on their own private VLAN and routed to the nearest aggregation site where they will have access to any of the other ACTION member's locations. The proposed managed firewall device will then be able to selectively terminate standards based IPSEC Layer3 VPN's in a full mesh or hub and spoke type setup to any and all sites that require them.

All VPN and Intranet traffic will be transported on a separate VLAN. All VPN traffic by default will be configured as standards-based Layer3 IPSEC VPN's configured in a full mesh or hub and spoke as required. Layer2 encrypted VPN's are optionally supported, however are not recommended due to a finite number of bridge domains that can be supported on the firewall device. On-demand IPSEC and SSL VPN's are also fully supported. Please reference the diagram below.

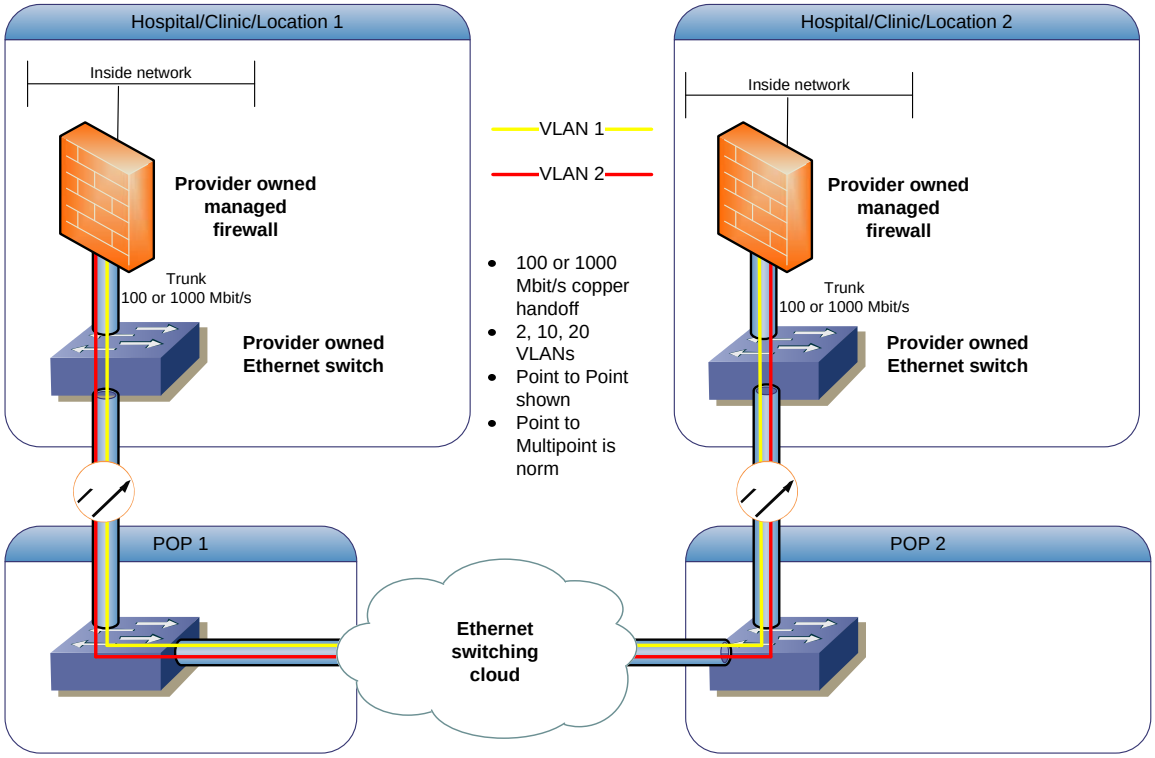


### c. Explanation of how and where the network will connect to a national backbone such as NLR or Internet2;

The DANC network was designed as a regional transport service with a goal of providing access to multiple carriers and service providers. Therefore, all our POP locations are designed to enable co-location with other service providers and we have located our POP's either in carrier hotels or locations that are readily accessible and meet the needs of all telecom providers. The DANC network is already interconnected with several international and regional Internet Service Provider's (ISP's); it also provides connectivity to NYSERNet for Internet2 services. Our carrier hotel locations allow for connectivity to many carriers as well as many state and local entities. In addition to direct connectivity, the ACTION Network members will have the ability to connect other healthcare networks via Internet VPN's.

DANC offers the unique ability to connect ACTION directly to the FDRHPO North Country Telemedicine Project. Additionally, DANC and its partner service providers have many other connections to healthcare locations and telecommunications service providers throughout New York State.

### d. Number of miles of fiber construction, and whether the fiber is buried or aerial;

The Open Access Telecom Network (OATN), completed in 2003, is a carrier-class telecommunications network serving Jefferson, Lewis, and St. Lawrence Counties, connecting our region to carrier collocation facilities in Syracuse, NY. The OATN is comprised of approximately 750 miles of fiber optic cable, and 14 Central Offices (CO's), which contain the electronic and optical equipment that power the network.

The Telecom Division, together with ION, applied for and received an ARRA Grant as part of the Broadband Stimulus Program. This grant provides redundancy for the existing customer base by allowing the Authority to build a diverse ring from Lowville to Utica and back to Syracuse. It also allows the Authority to extend the existing network

to Franklin, Clinton and Essex Counties. The completed OATN will consist of over 1,000 miles of fiber network and will include 19 Central Office locations.

The 100/1000 Mbps managed Ethernet service will be implemented and delivered via the optical fiber extensions per Telcordia and IEEE standards for the delivery of Ethernet services.

**e. Special systems or services for network management or maintenance (if applicable) and where such systems reside or are based.**

The leased service being provided to the ACTION customers listed in Table 2 includes network management and maintenance. The DANC network is monitored on a 24x7 basis via a variety of methods and systems. DANC's network monitoring operation utilizes several servers that monitor the elements of the network infrastructure. The status of each device is checked routinely and the Network Operation Staff is notified by several methods in the event of a failure. ACTION customers (listed in Table 2) will be notified of an outage immediately after the problem has been identified. The notice will be given to the designated party as requested (i.e. telephone call, emails, etc.). Reporting information includes network availability, utilization and performance. This information will be provided to ACTION as requested.

DANC's Network Management System (NMS) uses a dual notification system to assure all alarms are captured and resolved rapidly. DANC has a comprehensive provisioning and monitoring system based on the following tools:

- The planned network components that will monitor and manage the network are FortiManager, Nagios and Cacti.
- FortiManager , the Fortinet management platform, is used by the ION network operations group to manage and track configuration changes, backup configurations, manage software updates, log information and monitor overall health of the firewall device.
- FortiAnalyzer, the Fortinet services analysis platform, will also be used to gather statistics for threat and security monitoring. Each network element will also have at a minimum, Layer 3 health checks and where possible, Layer 4-7 health checks to insure that the service is working to the application layer. Nagios will also gather SNMP traps from all related devices and evaluate the trap condition and notify network operations accordingly.
- Cacti/RRD to monitor bandwidth utilization on each VLAN/device. Cacti graphs will be integrated into a publicly accessible SSL enabled web portal and will produce the graphs requested on a per-location, per-VLAN level.

**4. List of Connected Health Care Providers: Provide information below for all eligible and non-eligible health care provider sites that, as of the close of the most recent reporting period, are connected to the network and operational.**

**a. Health care provider site:** See Section 2, Tables 1 and 2.
**b. Eligible provider (Yes/No):** Yes. See Section 2, Tables 1 and 2.
**c. Type of network connection (e.g., fiber, copper, wireless);**
**d. How connection is provided (e.g., carrier-provided service; self-constructed; leased facility):** The connections are all carrier-provided leased service.
**e. Service and/or speed of connection (e.g., DS1, DS3, DSL, OC3, Metro Ethernet (10 Mbps):** All of the connections are either 100 Mbps or 1 Gbps. The actual connection speeds per location are as follows:

- Participating sites receiving 100 Mbps connections include:

- Lake Placid Health Center
- AMC Uihlein Skilled Nursing Facility
- Mountain Health Center
- Tupper Lake Health Center
- Renal Dialysis and Sports Medicine & Rehabilitation
- Westport Health Center (WHC)
- High Peaks Health Center (HPHC)
- Bessette Health Center
- Dwyer Health Center
- Salmon River Health Center
- Tower Health Center
- CVPH Ambulatory Surgery Center
- CVPH Sports Med and Rehab Center at PARC
- CVPH Dialysis Satellite at ECH
- CVPH Medical Center Rehabilitation Services
- Brasher Falls Family Health Center
- Norfolk Family Health Center
- Massena Memorial Hospital Dialysis Center
- Advanced Imaging at Baybrook
- Evergreen Health Center-Radiology Ext. Clinic
- Glens Falls Hospital Broad Street Campus
- Behavioral Health Services/Ridge Commons
- Fort Edward Family Medicine
- Granville Health Center
- Cambridge Family Health Center
- GFH Outpatient Renal Dialysis Center
- Greenwich Family Health Center
- Center for Recovery
- GFH Sleep Lab
- Hill Condy Family Practice
- Hoosick Falls Family Health Center
- The Medical Center at Wilton
- Hudson Falls Internal Medicine
- Salem Family Health Center
- The Rehab Center & The Hearing Center
- Main Street Physical Therapy
- Saratoga Physician's Practice
- Whitehall Health Center
- The Center for Recovery
- Wilton Health Services
- St. Regis Mohawk Tribe Health Services

- Participating sites receiving 1 Gbps connections include:
  - Adirondack Medical Center
  - Elizabethtown Community Hospital
  - Elizabethtown Community Health Center (ECHC)
  - Alice Hyde Medical Center
  - CVPH Medical Center
  - Massena Memorial Hospital
  - Inter-Lakes Health
  - Glens Falls Hospital

**f. Gateway to NLR, Internet2, or the Public Internet (Yes/No):** Yes. 500 Mbps Public Internet is provided as part of the leased service.

**g. Site Equipment (e.g., router, switch, SONET ADM, WDM), including manufacturer name and model number.** Termination equipment for the fiber connections are provided as part of the leased service. The equipment belongs to the service provider and is not owned or paid for by the ACTION site.

**h. Provide a logical diagram or map of the network.**
Detailed eligibility information for all health care facilities included in the ACTION network is provided in Section 2, Tables 1 and 2. The list of locations has been expanded per the Change of Scope submitted to USAC, and approved, in December 2010. A logical block diagram of the ACTION site locations and service provider point of presence (POP) locations is provided below.

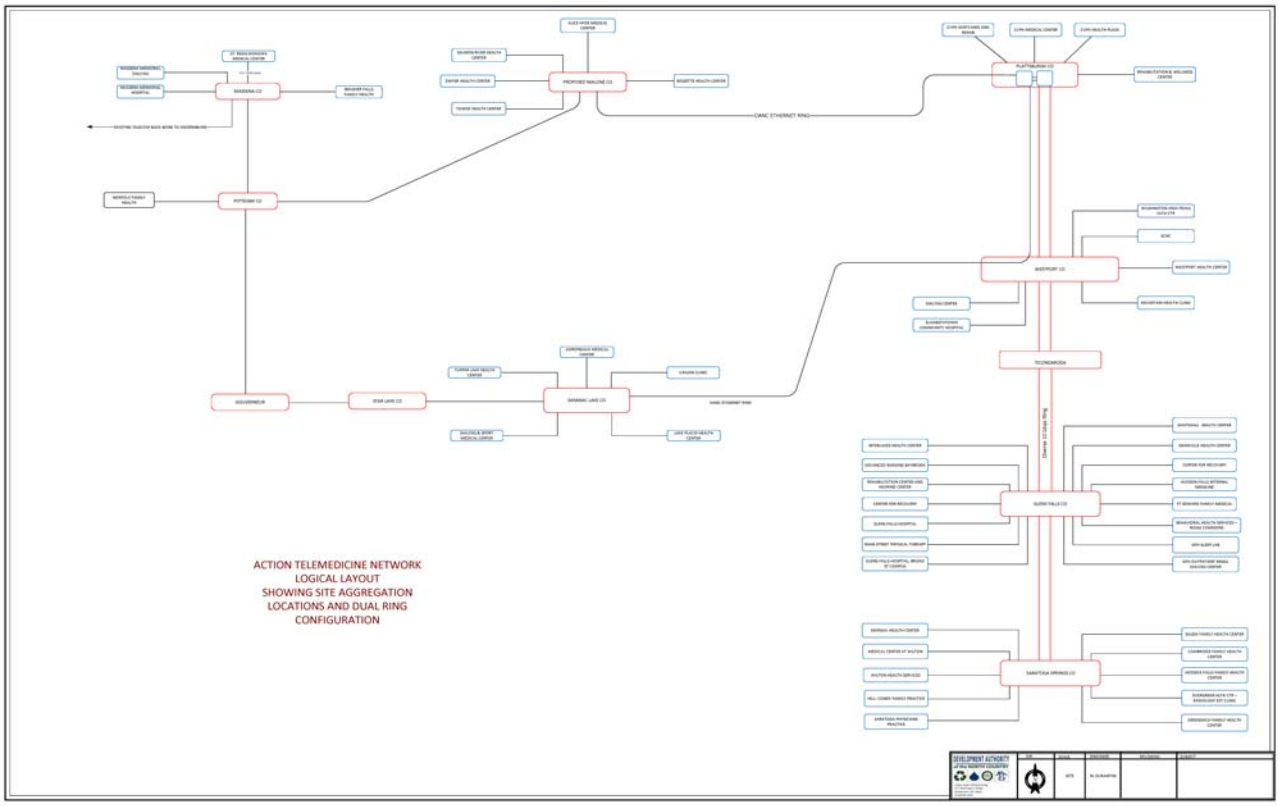


**5. Identify the following non-recurring and recurring costs, where applicable shown both as budgeted and actually incurred for the applicable quarter and funding year to-date.**

**a. Network Design**
A logical block diagram of the ACTION site locations and service provider point of presence (POP) locations is provided in Section 4h.
**b. Network Equipment, including engineering and installation**
**c. Infrastructure Deployment/Outside Plant**
- **i. Engineering**
- **ii. Construction**

**d. Internet2, NLR, or Public Internet Connection**
**e. Leased Facilities or Tariff Services**
**f. Network Management, Maintenance, and Operation Costs (not captured elsewhere)**
**g. Other Non-Recurring and Recurring Costs**

The Form 466A Attachment and the Network Cost Worksheet were approved in Quarter 13. The construction start date (Form 467) for the ACTION project is 18 July 2011. No invoices for NRC or MRC were submitted during Quarter 13. Specific NRC and MRC costs will be provided in Quarter 14.

In light of the final BTOP award results, we are in the process of reviewing the network design to best coordinate our network plan with other builds in the region in order to create a plan which most efficiently and cost effectively connects the healthcare providers in the region. This will be reviewed by USAC and the FCC and approval for the new plan will be sought. Once approved, we will update this section for the next quarterly report.

In Quarter 11 ACTION applied to USAC for a Change of Scope. This was approved in December 2010.

**Original Proposal:** The Adirondack - Champlain Telemedicine Information Network (ACTION) originally proposed a project to construct a state of the art fiber optic network, dedicated to telehealth and telemedicine, that would connect all health care providers in Clinton, Essex, and Franklin counties and would provide connectivity to Internet 2. This network was proposed to be built with extra capacity to provide additional services to other non-profit and for-profit healthcare participants. Those services were to include commercial Internet, telephone/video and storage. This would have provided ACTION with an opportunity to subsidize ongoing operating costs by leasing bandwidth to commercial service providers and selling services. Due to unforeseen circumstances (loss of federal grants) and the lateness of the hour, ACTION has decided to seek a change in scope to our original RHCPP funding proposal.

**New Scope:** ACTION now would like to seek proposals for a long term leased fiber/Ethernet services that provide the engineering, materials, construction, implementation, maintenance, and sustaining network support for a dedicated, managed router/firewall service over a secure fiber/Ethernet broadband network. The network will provide 10 Mbps, 100 Mbps or 1 Gbps fiber/Ethernet and will connect all of the Phase 1 entities and as many of the Phase 2 entities, listed in the original RHCPP proposal, as practical. Connectivity to the public Internet also will be provided as part of this leased service.

**Benefits of New Scope:** There are several benefits to choosing a long term leased service option over a private/public model. The primary difference is the diminished cost for building the network. A leased model requests network services from a SP, ISP or some combination of them both, to build the infrastructure required to connect the ACTION sites listed in Phase 1 and Phase 2. In some instances, the SP/ISP infrastructure already exists today or is in the process of being built. This was not the case when the original ACTION application was made to the FCC/USAC. The original proposal required ACTION to build both the transport backbone and the individual connections from the ACTION site locations to the ACTION backbone network.

Reducing the overall cost to build the network by leasing services from existing service providers will provide ACTION with more funds to request advanced networking services. Additionally, ACTION members will have more funds to pay for monthly recurring charges. This will enable ACTION to expand the number of ACTION member locations. The original plan did not have enough funds to include the locations listed in Phase 2; the leased option could include Phase 1 and Phase 2 locations. The enhanced long term leased services will allow the ACTION members to create more diverse telemedicine applications, which in turn will improve the overall long-term sustainability of the network.

Finally, the new scope, in which ACTION would like to lease the network and obtain network services from existing service providers will enable ACTION to complete timely, all of the

requirements of the RHCPP and should result in ACTION getting an approved funding commitment letter (FCL) before the 30 June 2011 deadline.

**6. Describe how costs have been apportioned and the sources of the funds to pay them:**

**a. Explain how costs are identified, allocated among, and apportioned to both eligible and ineligible network participants.**

- Any ineligible entity that chooses to connect to the ACTION network will pay 100% of all costs (NRC and MRC) associated with obtaining a network connection from the ACTION service provider (DANC).
- Network connection rates will be established upon award of the telecommunications network contract.
- NYS grants may be available to offset some of the monthly recurring costs (MRC) for the ACTION members. It is anticipated that 34 of the 48 months of MRC charges may be paid for with NYS grant funds. In this event, the NYS grant would pay for the first 34 months of MRC charges and the ACTION members would be responsible for the remaining 14 months of MRC charges.
- Eligible participants will pay 15% of the network service delivery costs for each site connection, based on the amount of bandwidth they choose to purchase. They will make these 15% MRC payments for all 48 months if no NYS grants are procured to help with the MRC funding; they will make 14 months of 15% MRC payments if NYS grants are procured to cover the first 34 months of 15% MRC payments.
- A 100 Mbps network connection will cost $2,268.00 per month. Of this amount, a site receiving a 100 Mbps connection would pay 15% of this amount, or $340.20 per month.
- A 1 Gbps network connection will cost $3,218.00 per month. Of this amount, a site receiving a 1 Gbps connection would pay 15% of this amount, or $482.70 per month.
- Public Internet connections speeds will vary by ACTION site requirements. The total amount of public Internet bandwidth available to the ACTION network is 500M. The total amount of bandwidth available to each ACTION member site was based on the following criteria:
    - Bandwidth requirements of the ACTION location.
    - Size of the ACTION location (i.e.: hospital versus primary care facility)
- Public Internet connection speeds may vary as follows:
    - 5 Mbps connection.
    - 10 Mbps connection.
    - 20 Mbps connection.
    - 50 Mbps connection.

**b. Describe the source of funds from:**

**i. Eligible Pilot Program network participants**

- ACTION members will pay 15% of network service delivery costs for all 48 months of MRC service. The NY ESDC grant will be used to pay the 15% NRC for each ACTION location.

**ii. Ineligible Pilot Program network participants**

- Ineligible entities that are chosen to connect to the ACTION network will pay 100% of all costs (NRC and MRC) associated with obtaining a network connection from the ACTION service provider (DANC).

**c. Show contributions from all other sources (e.g., local, state, and federal sources, and other grants).**

**i. Identify source of financial support and anticipated revenues that is paying for costs not covered by the fund and by Pilot Program participants.**

- The telecommunications services for this project will be supported by funding that the Foundation will receive from:
  - Empire State Economic Development Corporation, and ACTION Participants.
- The Empire State Economic Development Corporation funds will be used to pay for the 15% non-recurring costs. ACTION participants will pay for all 48 months of 15% monthly recurring costs (MRC).

**ii. Identify the respective amounts and remaining time for such assistance.**

- Funding from the Empire State Economic Development Corporation will total $550,00.00 and will be used for the 15% non-recurring cost (NRC) of construction.
- Funding from the ACTION participants for monthly recurring costs will total $838,540.80 (48 months of MRC).
- Each of the ACTION hospitals (Adirondack Medical Center, Elizabethtown Community Hospital, Alice Hyde Medical Center, CVPH Medical Center, Massena Memorial Hospital, Inter-Lakes Health, and Glens Falls Hospital) and the St. Regis Mohawk Tribe Health Services has contributed a minimum of $25,000.00 each towards costs not covered by the Rural Healthcare Pilot Program.

**d. Explain how the selected participant's minimum 15 percent contribution is helping to achieve both the selected participant's identified goals and objectives and the overarching goals of the Pilot Program.**

- The willingness of network participants to pay their minimum 15% contribution of network service delivery costs plus their $25,000.00 contribution towards administrative and legal costs demonstrates their commitment to identified goals and objectives and the overarching goals of the Pilot Program.

**7. Identify any technical or non-technical requirements or procedures necessary for ineligible entities to connect to the participant's network.**

- Ineligible entities will connect to the NCTP network in the same manner as all of the eligible entities. The only difference will be in how billing is handled.

**8. Provide on update on the project management plan, detailing:**

**a. The project's current leadership and management structure and any changes to the management structure since the last data report; and**

- Project Coordinator: Michael Simpson (on file).
- Assistant Project Coordinator: Bob Hunt (on file).
- Project Management: Provided by The Research Foundation of State University of New York with the members of ACTION as an advisory board.

**b. In the first quarterly report, the selected applicant should provide a detailed project plan and schedule. The schedule must provide a list of key project**

**deliverables or tasks, and their anticipated completion dates. Among the deliverables, participants must indicate the dates when each health care provider site is expected to be connected to the network and operational. Subsequent quarterly reports should identify which project deliverables, scheduled for the previous quarter, were met, and which were not met. In the event a project deliverable is not achieved, or the work and deliverables deviate from the work plan, the selected participant must provide an explanation.**

- A new Sustainability Plan was created during Quarter 11. The new Sustainability Plan is detailed in Section 9. The following table includes the significant milestones that will occur during the grant period. These projected milestones start within 30 days after the date of receipt of the Funding Commitment Letter (FCL) and will be managed by the ACTION.

| **Task Number** | Activity | Timeframe |
|---|---|---|
| **Task 1** | Network construction | Months 1 - 15 |
| **Task 2** | Meeting with the tertiary site providers to educate on telemedicine and refine business associate agreements | Months 4 - 12 |
| **Task 3** | Identification of site representatives—for clinical services and IT issues | Months 4 - 6 |
| **Task 4** | Roll out of the committees representing the North Country facilities, the tertiary facilities, and Selected Telecommunications Vendor | Months 6 - 15 |
| **Task 5** | Telemedicine equipment vendor selection and purchase of telemedicine equipment | Months 12 - 24 |
| **Task 6** | Protocol development for consult rule-in/rule out, consultation imitation and follow-up process, information exchange and security, etc. | Months 12 - 24 |
| **Task 7** | Initial engagement of commercial payers for demonstration and possible reimbursement | Months 12 - 24 |
| **Task 8** | Testing the network | Months 12 - 18 |
| **Task 9** | Training and piloting network access, and use of the equipment | Months 12 - 24 |
| **Task 10** | Roll out of initial clinical specialties: cardiology, gastroenterology, oncology, pulmonology and outpatient behavioral health (one per month) | Months 24 - 36 |
| **Task 11** | Evaluation | Months 36 - 48 |

- Recent calls with USAC have helped kick the project into gear. A draft version of our RFP is being revised and will be again submitted to our coach, our legal department is working on some issues related to our sustainability plan and we are in the final stages of securing our matching funds. (The line item requirement, not originally planned for, caused a restructuring of our match.)

- A new RFP was developed based on the Change of Scope submitted to USAC during Quarter 11. The new RFP is being reviewed by USAC at this time and is expected to post in February 2011.

- In Quarter 12 ACTION posted a new RFP (3 February 2011) and reviewed the vendor responses on 3/21/2011. A winner was selected (Development Authority of the North Country (DANC)) and contract negotiations are expected to be completed by the end of April 2011.

**Task 1 (Months 1 – 15):** ACTION received their FCL in June 2011. The chosen ISP, Development Authority of the North Country (DANC) began construction of the first ACTION locations in July of 2011. The majority of ACTION locations are expected to be ready for MRC services by the 4th week of April 2012.

**Task 2 (Months 4 – 12):** Not applicable at this time.

**Task 3 (Months 4 – 6):** Not applicable at this time.

**Task 4 (Months 6 – 15):** Not applicable at this time.

**Task 5 (Months 12 – 24):** Not applicable at this time.

**Task 6 (Months 12 – 24):** Not applicable at this time.

**Task 7 (Months 12 – 24):** Not applicable at this time.

**Task 8 (Months 12 – 18):** Not applicable at this time.

**Task 9 (Months 12 – 24):** Not applicable at this time.

**Task 10 (Months 24 – 36):** Not applicable at this time.

**Task 11 (Months 36 – 48):** Not applicable at this time.

**9. Provide detail on whether network is or will become self sustaining. Selected participants should provide an explanation of how network is self sustaining.**

A scenario #3/#8 hybrid is being considered as a sustainability scenario for our project. We are looking at projects in Nebraska and Southern Ohio as models we may wish to replicate. We also are exploring alternative sustainability options after reviewing the results of a third party feasibility study on the proposed project plan.

We will submit a revised draft of the RFP to our coach, with the sustainability plan and LOAs to follow shortly thereafter.

In Quarter 11 a Change of Scope, revised LOAs, Sustainability Plan and RFP were submitted to USAC for review and approval. The Change of Scope, LOAs and Sustainability plan have

been reviewed and approved. The new RFP is still undergoing review. We expect the RFP to be approved and posted in February 2011.

ACTION now would like to seek proposals for a long term leased fiber/Ethernet services that provide the engineering, materials, construction, implementation, maintenance, and sustaining network support for a dedicated, managed router/firewall service over a secure fiber/Ethernet broadband network. The network will provide 10 Mbps, 100 Mbps or 1 Gbps fiber/Ethernet and will connect all of the Phase 1 entities and as many of the Phase 2 entities, listed in the original RHCPP proposal, as practical. Connectivity to the public Internet also will be provided as part of this leased service. This is based on Scenario 9.

## Adirondack - Champlain Telemedicine Information Network

Federal Communications Commission (FCC) Rural Health Care Pilot Project

### Project Sustainability Plan

Project Director: Michael Simpson

***Plan Narrative***

Sustainability is the ability of the Adirondack - Champlain Telemedicine Information Network (ACTION) initiative to thrive and grow beyond the initial implementation. Expanded use of telemedicine, continued development of electronic health records, and electronic information sharing will require continued availability of this network. Each new development using this technology will increase the importance of sustaining the ACTION initiative. The Research Foundation of the State University of New York is the current fiscal agent for the Adirondack-Champlain Telemedicine Information Network (ACTION) consortium. It is the intention of the consortium to eventually form a 501(c)(3) to fulfill that role. Hereinafter the consortium will simply be referred to as ACTION.

***Project Champions***

The project champions for this specific project include Michael Simpson (Director, Office of Sponsored Research & Programs) SUNY Plattsburgh and Robert Hunt (Regional Telemedicine Project Manager) FDRHPO. The health care participating entity project champions are John Johnson (CEO) Alice Hyde Medical Center, Joel Benware (CIO) Alice Hyde Medical Center, Rodney C. Boula (CEO/Administrator) Elizabethtown Community Hospital, Brett Sicola (Director – Information Systems & Support) Elizabethtown Community Hospital, Chandler Ralph (President and CEO) Adirondack Medical Center, Phillip Deleel (Director of Information Systems) Adirondack Medical Center, Stephens Mundy (President/CEO) CVPH Medical Center and Rosemary Miller (Associate Vice President Information Services and Support) CVPH Medical Center.

***Sources for 15% Funding***

- Funding from the Empire State Development Corporation will total $550,000 and will be used for the 15% non-recurring cost (NRC) of construction.
- Funding from the ACTION participants for monthly recurring costs will total $838,540.80 (48 months of MRC).
- Each of the ACTION hospitals (Adirondack Medical Center, Elizabethtown Community Hospital, Alice Hyde Medical Center, and CVPH Medical Center,) and the St. Regis Mohawk Tribe Health Services has contributed a minimum of $25,000.00 each towards costs not covered by the Rural Healthcare Pilot Program (St. Regis has contributed

$50,000.00). The other ACTION hospitals (Massena Memorial Hospital, Inter-Lakes Health, and Glens Falls Hospital) will each contribute $25,000.00 after ACTION has secured a funding commitment letter (FCL) from the Rural Healthcare Pilot Program (RHCPP).

***Upfront Charges***

This project has selected Development Authority of the North Country (DANC) as its network vendor. DANC is providing ACTION service for a specified amount of bandwidth (100M or 1G) for each of the sites listed in the sustaining budget plan located on the pages that follow the section titled, "Conclusion – Collective Benefit."
During the construction phase DANC will install the connection from the ACTION facilities to the DANC network. DANC will then terminate that connection using their equipment. DANC's Open Access Telecom network (OATN) platform will provide ACTION members the maximum flexibility to add new services or increase bandwidth at the initial ACTION locations. The OATN will also allow ACTION to seamlessly add new sites to the existing network. DANC's broadband service will be connected to the facilities (listed in the sustaining budget plan) via single-mode Corning SMF-28E fiber optic cable constructed as lateral cables from the existing OATN ring backbone facility.

DANC is responsible for maintaining the equipment for the entire period described in the lease with ACTION. ACTION does not own the fiber or the equipment that terminates the fiber. The ACTION facilities are treated as stub locations on the DANC network. There are no other entities on the dedicated fiber connection and there are no other entities sharing the fiber connection between the ACTION facilities and the DANC network. All traffic originating or terminating on an ACTION facility will traverse the DANC network via dedicated virtual local area network (VLAN) connections. No invoices for any equipment or services will be authorized by ACTION to DANC until (1) after the installation and services have commenced or (2) prior to USAC Fiscal Year 2009, which starts on 1 July 2009.

***Monthly Lease Option/Excess Capacity***

ACTION will be paying for the leased connections on a month-by-month basis; the terms of the contract that covers the monthly recurring payment costs are in force for 4 years from the initial start of service for each site connecting to the DANC fiber network. Beyond the initial 4 year term of the contract monthly recurring costs for each site are projected to be renegotiated at approximately the same cost as in years 1 through 4 of the current contract (see Column G of the budget plan).

This is configuration is similar to Scenario 9 of the "Excess Bandwidth and Excess Capacity Scenarios" document. The primary difference is ACTION will pay monthly for the service connection based on a 4 year contract with the vendor (DANC) instead of prepaying up front for a 10-15 year period. ACTION is not requesting any excess capacity and offerors are not authorized to add additional capacity on segments connecting ACTION locations that will be funded by this award. ACTION will only pay for a leased service that supports the amount of bandwidth requested in this RFP.

***Ownership Structure***

ACTION and ACTION members do not own the network infrastructure of any of the termination equipment (i.e., Layer 2 Ethernet Switch, Firewall, uninterrupted power supply (UPS), fiber patch panels, fiber runs between ACTION member locations and the service provider network). ACTION and ACTION members are leasing all aspects of the fiber/Ethernet network being provided by the service provider (DANC); the service provider (DANC) owns all of the fiber and all of the equipment. The service provider (DANC) is responsible for maintaining all of the fiber and all of the equipment installed by the service provider per the terms of the contract between ACTION and DANC.

***Use of the Network by Non-Eligible Entities***

ACTION does not own the network. We are only paying for access to the provider's (DANC) network. Ineligible entities that want or need to connect to this fiber network will pay their own installation and service charges for their own fiber connectivity directly to the provider (DANC). ACTION will not pay any costs or use any funds for non-eligible entities.

***State and Federal Funding***

ACTION will use funding from the Empire State Development Corporation ($550,000) which will be used to pay for the 15% non-recurring cost. This is a one-time grant and cannot be renewed to provide additional funding.

***Funding in the Regular RHC Program***

At this time we have not included any budget references for sites that meet the eligibility requirements for the regular RHC funding program. ACTION will apply for funding for all ACTION sites at a future date once we determine how the Primary Program will be restructured based on the changes made to the program proposed by the notice of proposed rulemaking (NPRM) released 15 July 2010.

***Management of the Network***

ACTION will directly oversee the project and will contract with the Fort Drum Regional Health Planning Organization (FDRHPO) to use their Regional Telemedicine Project Coordinator. In addition to the FDRHPO coordinator, the project team will consist of committees representing the ACTION hospitals and their affiliates, the St. Regis Mohawk Tribe Health Services, and the Development Authority of the North Country (DANC). DANC will manage the installation and be responsible management of the backbone network. The Regional Telemedicine Project Coordinator, who is a staff member of the FDRHPO, will carry out the following responsibilities:

- Act as central project contact
- Represent ACTION and the ACTION members to DANC during network construction
- Provide staff support to all committees
- Manage relationships with and between the ACTION hospitals and St. Regis Mohawk Tribe
- Initiate and train staff on telemedicine processes
- Oversee efforts to begin payer reimbursement
- Track outcomes
- Track budget
- Analyze cost efficiency
- Evaluate when/if new services or providers are needed
- Prepare FCC grant reports
- Seek alternate sources of funding
- Seek alternate uses of the network—e.g., CME, NYSERNet research, etc.

The lease agreement calls for DANC to provide Network Management as part of the lease service. The DANC network and the stub facilities directly connected to the DANC network (see the list of sites shown in the sustaining budget plan) are monitored by DANC on a 24x7

basis via a variety of methods and systems. DANC's network monitoring operation utilizes several servers that monitor the elements of the network infrastructure. The status of each device is checked routinely and the Network Operation Staff is notified by several methods in the event of a failure. ACTION and the ACTION members will be notified of an outage immediately after a problem has been identified.

***Anticipated Future Cost Savings***

The smaller clinics included in this project will have direct access to hospital resources. These resources include patient registration and management applications, electronic health record information, and telemedical services performed by a wider variety of specialties than the clinics can provide organically. The regional hospitals will have access to the clinic operations and electronic health records, which will provide a more seamless style of health care. The efficiency created by combining and joining resources is the other component factored into cost savings and revenue increases identified in the sustainability budget. The ACTION Project incurs a significant portion of its costs during the construction of the fiber optic stub connections between the participating healthcare entities, listed in the sustaining budget plan, and the service provider's network. Once the fiber optic stub connection is built, with all 48 connection sites live, the ongoing costs of the network still represent only a fraction of what the majority the facilities are currently paying for telecommunications services. The cost savings from an overall network standpoint are significant even without taking into account the clinical cost benefits that will be realized when patients are retained via telemedicine consults.

***Sources of Future Support***

Anticipated future uses are currently under development and include telemedicine to perform mental and behavioral health outpatient services, telecardiology, telepsychiatry and telestroke services. Tertiary care centers in the region are preparing a catalog of services they are able to provide and those they seek to actively develop. Continuity of operations is made possible by implementation of just a few such programs. These programs will provide the fiscal support needed to sustain the network and continue expansion of telemedicine in the region using these resources and are a key component factored into the estimated cost savings and revenue increases identified in the sustainability budget at the end of this document.

This project will form strong relationships between public and private organizations that will use and value telemedical capabilities. These relationships, coupled with entrepreneurial vigilance, will seek to identify and pursue additional opportunities. We understand that telemedicine doesn't simply bridge the geographic gap. It is also technology that will make available advances never before thought possible. The desire of the participants to pursue collaborative endeavors in this arena is evident and will continue to grow.

ACTION and ACTION members will assess what new streams of revenue derived from Telemedicine applications, combined with reductions in operating expenses, have been created at the end of the 3rd year of services provided under the current contract between ACTION and DANC. If the combination of new revenue streams and reduced operating expenses is not sufficient to allow the ACTION members to sustain the current leased network, ACTION will begin the process of migrating ACTION members from the rural healthcare pilot program (RHCPP) to the Primary Program. ACTION would apply for funding for all ACTION sites once we determine how the Primary Program will be restructured based on the changes made to the program proposed by the notice of proposed rulemaking (NPRM) released 15 July 2010.

Network Management costs are built into the monthly recurring charges. Funds provided by the FCL will cover 85% of each site's cost for the first four (4) years of the project. The other 15% of the costs will be paid by the participating healthcare entities listed in the sustaining budget plan.

The participating healthcare entities will be responsible for 100% of the monthly recurring charges in years five (5) through twelve (12). These costs will be offset by projected future revenue streams and the overall reduction in network connectivity costs.
If the combination of future revenue streams and an overall reduction in network connectivity costs don't materialize, or aren't big enough to cover the MRC payments after the 4th year of service, then ACTION will transition from the Rural Healthcare Pilot Program to the Primary Program. The network will be re-bid (Form 465) and a new ever-green contract will be negotiated. The total cost to each ACTION member in the Primary Program will be determined once the FCC issues a final determination with regard to the Rural Health Care notice of proposed rulemaking (NPRM) issued on 9 August 2010.

***Clinical Cost Benefit***

Together, five specialties consisting of (1) cardiology, (2) trauma (includes multiple trauma), (3) Mental Health, (4) Neurology, and (5) respiratory (includes pneumonia/respiratory failure), represent more than 52% of the cases that are transferred from ACTION members to Fletcher Allen Health Care in Burlington, VT. These cases also represent greater than 30% of the charges. Ultimately we found a cost differential for transferring a case, as compared to retaining a case, ranging from $1,500 to more than $16,000 per case, depending on the type of case. Adjusting for those cases that would have to be transferred either because of acuity, patient preference or other reasons, we projected a potential cost savings of nearly $7.08 million just for these five specialties. Retaining 5% of the remaining specialties has the potential to realize another $2 million in revenue for local hospitals. All told, retaining $9 million worth of services in the ACTION communities would equal a 3% improvement in local healthcare inpatient revenue. The total monthly recurring cost (MRC) to maintain the ACTION network per year after the Rural Healthcare Pilot Program funding ends is $5.7 million.

At its core, telemedicine reallocates resources from a constrained location (the urban health care in VT) to sub-optimized, rural facilities. The downside to the urban facility is relatively minor in comparison, as the total drop in case volume should have only a small impact on overall contribution margin. For these overburdened facilities, the opportunity to minimize transfer of less complex cases will allow them to improve throughput and concentrate care for higher acuity patients. Further, the addition of telemedicine has the potential of actually increasing referrals for cases that are more appropriate (and cost efficient) for the tertiary facilities, based on the stronger provider relationships that telemedicine creates.

***Reimbursement***

Telemedicine, which uses telecommunications technology to provide medical information and services across distance, is assuming even greater importance in today's healthcare. Cost –effectiveness is a crucial issue across the board, as cost and time savings were among the original goals of telemedicine. The ultimate goal of telemedicine is a seamless worldwide healthcare system that can provide health assessment, diagnosis, intervention, consultation, supervision and significant information across distance.
The ever-growing world of technology and the awareness by physicians, patients, payers and other medical staff has brought telemedicine into the spotlight and is rapidly becoming a way of medical treatment for many rural and non-metropolitan areas of the world.
The most common forms of Telehealth that are in place currently:

- Telepathology
- Teleradiology
- Telepsychiatry

Telemedicine promises lower costs. Proponents insist that it can save rural healthcare costs for both patients and providers.

## PROFESSIONAL & FACILITY BILLING CODES

Effective January 01, 2010, the following codes are submitted to all payers:

| TELEHEALTH SERVICE | CPT/HCPCS | Mod |
|---|---|---|
| Inpatient Consultations | G0425 - G0427 | GT |
| Office Visit/ Outpatient Service | 99201 - 99215 | GT |
| Psychiatrist diagnostic interview exam | 90801 | GT |
| Individual Psychotherapy | 90804 - 90809 | GT |
| Pharmacological Management | 90862 | GT |
| Individual Medical Nutrition Therapy | G0270, 97802, 97803 | GT |
| ESRD related services | 90951,90952,90954,90955, 90957,90958,90960,90961 | GT |
| Neurobehavioral Status Exam | 96116 | GT |
| Follow Up Inpatient Telehealth Consult | G0406 - G0408 | GT |
| Health & Behavior Assessment & Intervention Services (HBAI) | 96150 - 96152 | GT |

## MEDICARE COVERAGE & REIMBURSEMENT

The Center for Medicare and Medicaid Services (CMS), as of 2003, has set forth reimbursement guidelines for Telemedicine and Telehealth Services.
You can find this, along with further detailed information using the online CMS manuals, which can be found at ***http://www.cms.hhs.gov/manuals.*** These online manuals explain the background of Telehealth services, eligibility criteria, and reimbursement.
The information provided herein, is a ***broad overview*** of Medicare guidelines. As technologies continue to expand and become obtainable, the number of payers reimbursing for telemedicine claims continues to rise.
For the purposes of the ACTION network, coverage is divided into two areas.

1. **Remote patient face-to-face services seen via live video conferencing**

CMS defines Telehealth services to include those services that require a face-to-face meeting with the patient. Such reimbursement is limited to the type of services provided, geographical location, type of institution delivering the services and the type of healthcare provider.

A. Location of facility: The service must be provided to an eligible Medicare Beneficiary, in an eligible facility (***Originating site- Where the patient is located***). Facility must be located outside of a metropolitan area. However, there is no limitation on the location of the health professional rendering the medical service. (***Referring/Distant site- Where the provider is located***)

B. Eligible Services: Reimbursed medical services include consultation, office visits, individual psychotherapy and pharmacologic management delivered via telecommunications.

C. Eligible Providers: Only the following healthcare providers are eligible for reimbursement. Providers are to practice within the scope of their state practice act.

- Physician
- Nurse Practitioner
- Physician Assistant

- Nurse Midwife
- Clinical Nurse Specialist
- Clinical Psychologist *
- Clinical Social Worker*
- Registered Dietitian or Nutrition Professional

*Clinical psychologists and Clinical Social Workers cannot bill for Psychotherapy services that include medical evaluation and management services under Medicare (i.e., CPT 90805, 90807, and 90809).

D. Eligible Facilities (Originating Sites)

- The office of a physician or practitioner
- Hospital
- Critical Access Hospital
- Rural Health Clinic
- Federally qualified Health Center

E. Reimbursement: Reimbursement to the provider rendering the service is the same as the current fee schedule amount for the service provided. These would be the professional fees. **Medicare:** Reimbursed at 80% of the allowed amount, after deductible, with 20% co- insurance. **Medicaid:** Reimbursed the same as the current Medicaid fee schedule for that service. **Other payers:** Most payers are following the guidelines set by the Center for Medicare and Medicaid Services. They are paid using the current fee schedule contracted with the payer, for the same E/M service as in the office.

F. Billing:

a. Billing for Professional Fees: Claims for professional fee reimbursement should be submitted with the appropriate CPT code for the professional service, and the Telehealth modifier, 'GT' – "via interactive audio and video telecommunications system" (See Table I). By submitting the claim with the modifier, the distant site provider certifies that the patient was present at the originating site while service was rendered.

b. Billing for Facility Fees: A non-metropolitan facility where the patient is located is eligible for facility fee reimbursement. To claim facility payment, claim should be submitted with the appropriate CPT or HCPCS code (See Table I).

2. **Remote Non face-to-face services that can be conducted either through live video conferencing or via 'store and forward' telecommunication services**

Services delivered using telecommunications technology, but not requiring the patient to be present during their implementation, are covered the same as services delivered when on-

site at the medical facility. **CMS does not consider these services as telemedicine. They are billed the same as services done on-site.**

There are no geographical or facility limitations on these services. The largest single specialty providing remote services under this policy is radiology. However, the use of telecommunications in delivering pathology, cardiology, physician team conferences/consults and other services are also covered.

**PAYER REIMBURSEMENT SUMMARY**

At this time, the following payers are on board with Telehealth. Because it is billed using the same CPT codes as any other E/M outpatient visit, just distinctive by the modifier, **payers are reimbursing per the current contracted fee schedule already in place**.

*deductibles and co-pays for all payers pertain if applicable

| PAYER | COVERED | REIMBURSEMENT |
|---|---|---|
| Medicare | Yes | 80% of allowed<br>20% co-insurance |
| Medicaid/FHP | Yes | Current fee schedule |
| Aetna | Yes | Current fee schedule |
| American Progressive | Yes | 80% of allowed<br>20% co-insurance |
| Arcadian Health | Yes | 80% of allowed<br>20% co-insurance |
| Excellus | Yes | Current fee schedule |
| TPA's (POMCO,RMSCO) | Per Subscribers Plan | Current fee schedule |
| HealthNet/Tricare | Yes | Current fee schedule |
| GHI | Yes | Current fee Schedule |

***Enhanced Patient Care***

Hospitals will be able access and share information between hospitals. Ventures by the regional hospitals into PACS with search and retrieve capabilities have already been researched as part of a HEAL NY grant submission. A verbal agreement exists between the information technology leaders of several of the hospitals. This agreement is to seek opportunities for collaboration in information technology. The agreement is that competitive interests are better served through other means and that technology should be a shared experience. This project is the cornerstone of such an effort.

Relationships between the tertiary care centers and regional hospitals will result in enhanced patient care. Telemedicine, distance learning, and continuity of care are supported by this project. The opportunity now exists to fashion a more cohesive network similar to a Regional Health Information Organization. This will position the region to more readily implement and adopt the emerging electronic health records (EHR) standards.
The four core hospitals that make up the ACTION alliance (Alice Hyde Medical Center, Adirondack Medical Center, CVPH Medical Center and Elizabethtown Community Hospital) are all participating in the NY HEAL 10 Patient Centered Medical Home (PCMH) model which requires effective use of interoperable health information technology (health IT). The projects will identify a target patient population with a chronic disease or high risk/high cost diagnosis and include all of the key care givers in their community involved in patient care for this population. Coordination of clinical care will be supported by connecting these care givers through a PCMH model and the implementation of interoperable health record systems (EHRs) that are linked through the Statewide Health Information Network for New

York (SHIN-NY). The ACTION network will play a significant role in connecting all of the disparate locations required to support the collection of data required by the PCMH model.

***Conclusion – Collective Benefit***

All involved parties have much to gain or lose in sustaining this project. The larger organizations will create the support programs that include service for the smaller ones. Ultimately, the loss of capability would have a significant negative impact on all participants. Therefore, the collective benefit will be sustained through continued collaboration and development of this technology. The collective organizations are already spending a significant amount on lower bandwidth and less efficient technology than the fiber/Ethernet this project will provide. Funding for continued support of this resource will come from the individual organizations, some of which will be offset by the dollars being invested in the current connectivity, and through hard cost savings and increased revenue streams. Each of these items has been included in the sustaining budget plan below.

In addition, grant dollars will be sought for telemedicine equipment and electronic medical record (EMR) interfacing opportunities that will increase the ability to efficiently deliver services and sustain the network. However, expected grant dollars for these types of equipment and EMR opportunities were not included in the sustainability budget as they are a moving target and do not provide a sustainable funding stream.

## Adirondack - Champlain Telemedicine Information Network 48 Participating Entities

| Site | Organization | Minimum Existing B/W | (1) Current Monthly Cost for Existing Bandwidth | (2a) Monthly Cost first 48 Months 100MB Clinics 1GB Hospitals | (2b) Monthly Cost Years 5 - 15 100MB Clinics 1GB Hospitals | (3) Cost Savings from Telemedicine | (4) New Revenue from Telemedicine | Cost Savings from Telemedicine + New Revenue from Telemedicine | New Bandwidth Cost Not Offset by Savings or Revenue (First 34 Months) | New Bandwidth Cost Not Offset by Savings or Revenue (Last 14 Months) | New Bandwidth Cost Not Offset by Savings or Revenue (Years 5 - 15) | Monthly Savings for Site: First 34 Months Current Monthly Cost Minus New Bandwidth Cost Not Offset by Savings or Revenue | Monthly Savings for Site: Last 14 Months **Current Monthly Cost Minus New Bandwidth Cost Not Offset by Savings or Revenue** | Monthly Savings or Increase for Site: Years 5 - 12 Current Monthly Cost Minus New Bandwidth Cost Not Offset by Savings or Revenue |
|---|---|---|---|---|---|---|---|---|---|---|---|---|---|---|
| 1 | Adirondack Medical Center | Cable | $1200 | $483 | $3,218 | $1000 | $900 | $1900 | -$1417 | -$1417 | $1318 | $2,617 | $2,617 | -$118 |
| 2 | Lake Placid Health Center | Cable | $200 | $340 | $2,268 | $600 | $600 | $1200 | -$860 | -$860 | $1068 | $1060 | $1060 | -$868 |
| 4 | Mountain Health Center | Cable | $200 | $340 | $2,268 | $500 | $500 | $1000 | -$660 | -$660 | $1268 | $860 | $860 | -$1068 |
| 5 | Tupper Lake Health Center | Cable | $200 | $340 | $2,268 | $500 | $500 | $1000 | -$660 | -$660 | $1268 | $860 | $860 | -$1068 |
| 6 | Renal Dialysis and Sports Medicine & Rehabilitation | Cable | $200 | $340 | $2,268 | $600 | $700 | $1300 | -$960 | -$960 | $968 | $1160 | $1160 | -$768 |
| 7 | Elizabethtown Community Hospital | Cable | $200 | $483 | $3,218 | $1000 | $900 | $1900 | -$1417 | -$1417 | $1318 | $1617 | $1617 | -$1118 |
| 8 | Elizabethtown Community Health Center (ECHC) | Cable | $200 | $483 | $3,218 | $600 | $500 | $1100 | -$617 | -$617 | $2,118 | $817 | $817 | -$1918 |
| 9 | Westport Health Center (WHC) | Cable | $200 | $340 | $2,268 | $500 | $500 | $1000 | -$660 | -$660 | $1268 | $860 | $860 | -$1068 |
| 10 | High Peaks Health Center (HPHC) | Cable | $200 | $340 | $2,268 | $500 | $500 | $1000 | -$660 | -$660 | $1268 | $860 | $860 | -$1068 |
| 11 | Alice Hyde Medical Center | Cable | $200 | $483 | $3,218 | $1000 | $900 | $1900 | -$1417 | -$1417 | $1318 | $1617 | $1617 | -$1118 |
| 12 | Bessette Health Center | Cable | $200 | $340 | $2,268 | $400 | $500 | $900 | -$560 | -$560 | $1368 | $760 | $760 | -$1168 |
| 13 | Dwyer Health Center | Cable | $200 | $340 | $2,268 | $500 | $500 | $1000 | -$660 | -$660 | $1268 | $860 | $860 | -$1068 |
| 14 | Salmon River Health Center | Cable | $200 | $340 | $2,268 | $600 | $500 | $1100 | -$760 | -$760 | $1168 | $960 | $960 | -$968 |
| 15 | Tower Health Center | Cable | $200 | $340 | $2,268 | $400 | $500 | $900 | -$560 | -$560 | $1368 | $760 | $760 | -$1168 |
| 16 | CVPH Medical Center | Cable | $200 | $483 | $3,218 | $1000 | $900 | $1900 | -$1417 | -$1417 | $1318 | $1617 | $1617 | -$1118 |
| 17 | CVPH Ambulatory Surgery Center | Cable | $200 | $340 | $2,268 | $600 | $500 | $1100 | -$760 | -$760 | $1168 | $960 | $960 | -$968 |
| 18 | CVPH Sports Med and Rehab Center at PARC | Cable | $200 | $340 | $2,268 | $500 | $500 | $1000 | -$660 | -$660 | $1268 | $860 | $860 | -$1068 |
| 19 | CVPH Dialysis Satellite at ECH | Cable | $200 | $340 | $2,268 | $600 | $500 | $1100 | -$760 | -$760 | $1168 | $960 | $960 | -$968 |
| 20 | CVPH Medical Center Rehabilitation Services | Cable | $200 | $340 | $2,268 | $500 | $500 | $1000 | -$660 | -$660 | $1268 | $860 | $860 | -$1068 |
| 21 | Massena Memorial Hospital | Cable | $200 | $483 | $3,218 | $1000 | $900 | $1900 | -$1417 | -$1417 | $1318 | $1617 | $1617 | -$1118 |
| 22 | Brasher Falls Family Health Center | Cable | $200 | $340 | $2,268 | $400 | $400 | $800 | -$460 | -$460 | $1468 | $660 | $660 | -$1268 |
| 23 | Norfolk Family Health Center | Cable | $200 | $340 | $2,268 | $400 | $400 | $800 | -$460 | -$460 | $1468 | $660 | $660 | -$1268 |
| 24 | Massena Memorial Hospital Dialysis Center | Cable | $200 | $340 | $2,268 | $500 | $500 | $1000 | -$660 | -$660 | $1268 | $860 | $860 | -$1068 |
| 25 | Inter-Lakes Health | Cable | $200 | $483 | $3,218 | $1000 | $900 | $1900 | -$1417 | -$1417 | $1318 | $1617 | $1617 | -$1118 |
| 26 | Glens Falls Hospital | Cable | $2,800 | $483 | $3,218 | $500 | $1200 | $1700 | -$1217 | -$1217 | $1518 | $4,017 | $4,017 | $1282 |
| 27 | Advanced Imaging at Baybrook | Cable | $1400 | $340 | $2,268 | $200 | $700 | $900 | -$560 | -$560 | $1368 | $1960 | $1960 | $32 |
| 28 | Evergreen Health Center-Radiology Ext. Clinic | Cable | $1400 | $340 | $2,268 | $600 | $500 | $1100 | -$760 | -$760 | $1168 | $2,160 | $2,160 | $232 |
| 29 | Glens Falls Hospital Broad Street Campus | Cable | $1000 | $340 | $2,268 | $200 | $600 | $800 | -$460 | -$460 | $1468 | $1460 | $1460 | -$468 |
| 30 | Behavioral Health Services/Ridge Commons | Cable | $102 | $340 | $2,268 | $200 | $400 | $600 | -$260 | -$260 | $1668 | $362 | $362 | -$1566 |
| 31 | Fort Edward Family Medicine | Cable | $102 | $340 | $2,268 | $200 | $600 | $800 | -$460 | -$460 | $1468 | $562 | $562 | -$1366 |
| 32 | Granville Health Center | Cable | $102 | $340 | $2,268 | $500 | $500 | $1000 | -$660 | -$660 | $1268 | $762 | $762 | -$1166 |
| 33 | Cambridge Family Health Center | Cable | $1200 | $340 | $2,268 | $600 | $500 | $1100 | -$760 | -$760 | $1168 | $1960 | $1960 | $32 |
| 34 | GFH Outpatient Renal Dialysis Center | Cable | $1600 | $340 | $2,268 | $200 | $700 | $900 | -$560 | -$560 | $1368 | $2,160 | $2,160 | $232 |
| 35 | Greenwich Family Health Center | Cable | $1200 | $340 | $2,268 | $500 | $500 | $1000 | -$660 | -$660 | $1268 | $1860 | $1860 | -$68 |
| 36 | Center for Recovery | Cable | $1000 | $340 | $2,268 | $200 | $500 | $700 | -$360 | -$360 | $1568 | $1360 | $1360 | -$568 |
| 37 | GFH Sleep Lab | Cable | $1400 | $340 | $2,268 | $200 | $600 | $800 | -$460 | -$460 | $1468 | $1860 | $1860 | -$68 |
| 38 | Hill Condy Family Practice | Cable | $102 | $340 | $2,268 | $200 | $600 | $800 | -$460 | -$460 | $1468 | $562 | $562 | -$1366 |
| 39 | Hoosick Falls Family Health Center | Cable | $102 | $340 | $2,268 | $500 | $500 | $1000 | -$660 | -$660 | $1268 | $762 | $762 | -$1166 |
| 41 | The Medical Center at Wilton | Cable | $1400 | $340 | $2,268 | $200 | $700 | $900 | -$560 | -$560 | $1368 | $1960 | $1960 | $32 |
| 42 | Hudson Falls Internal Medicine | Cable | $102 | $340 | $2,268 | $200 | $500 | $700 | -$360 | -$360 | $1568 | $462 | $462 | -$1466 |
| 43 | Salem Family Health Center | Cable | $102 | $340 | $2,268 | $600 | $500 | $1100 | -$760 | -$760 | $1168 | $862 | $862 | -$1066 |
| 44 | The Rehab Center & The Hearing Center | Cable | $1550 | $340 | $2,268 | $200 | $500 | $700 | -$360 | -$360 | $1568 | $1910 | $1910 | -$18 |
| 45 | Main Street Physical Therapy | DSL | $102 | $340 | $2,268 | $200 | $500 | $700 | -$360 | -$360 | $1568 | $462 | $462 | -$1466 |
| 46 | Saratoga Physician's Practice | Cable | $102 | $340 | $2,268 | $200 | $500 | $700 | -$360 | -$360 | $1568 | $462 | $462 | -$1466 |
| 47 | Whitehall Health Center | Cable | $102 | $340 | $2,268 | $600 | $400 | $1000 | -$660 | -$660 | $1268 | $762 | $762 | -$1166 |
| 48 | The Center for Recovery | Cable | $1200 | $340 | $2,268 | $200 | $700 | $900 | -$560 | -$560 | $1368 | $1760 | $1760 | -$368 |
| 49 | Wilton Health Services | Cable | $102 | $340 | $2,268 | $200 | $600 | $800 | -$460 | -$460 | $1468 | $562 | $562 | -$1366 |
| 50 | St. Regis Mohawk Tribe Health Services | T-1 | $2,000 | $0 | $2,268 | $600 | $600 | $1200 | -$1200 | -$1200 | $1068 | $3,200 | $3,200 | $932 |
| | | | | | | | | | | | | **$60,543** | **$60,543** | **($38,792)** |

This budget was developed based on the following assumptions:
(1) Rural ACTION participating hospitals are paying minimum of $1200 per month for a T-1, Urban ACTION particicpating hospitals are paying minimum of $1000 per month for a single cable connecton and up to $2800 per month for multiple cable connections, participating rural primary clinics are paying an average of $150 per month for Time Warner Cable Business Class connectivity and participating Urban Clinics are paying an average of $1200 per month for Time Warner Cable High-Speed connectivity.
(2a) Monthly recurring cost (MRC) per 100MB and 1GB Ethernet connections for first 48 months of initial service contract paid by ACTION members at 15% of cost.
(2b) Monthly recurring cost (MRC) per 100MB and 1GB Ethernet connections for years 5-12 paid by ACTION members at 100% of cost.
(3) ACTION estimates that: rural hospitals will save at least $1,000 per month by utilizing the bandwidth to do remote telemedicine consults rather than bringing the specialists to their facilities and rural clinics will save $400-$600 per month in staff costs by utilizing the broadband network to more efficiently use their supporting hospitals resources. Urban hospitals will save at least $500 per month by consolidating multiple lower-speed network connections into high-speed fiber/Ethernet virtual local area networks (VLANs) and urban clincs will save at least $200 per month via network consolidation.
(4) ACTION estimates that: urban hospitals will increase revenue by at least $1,200 per month through providing telemedicine consults to rural sites, rural hospitals will increase revenue by at least $900 per month and rural/urban clinics will increase revenue by $400-$700 per month through the provision of new sub-specialty services, only available through remote telemedicine consults;

**10. Provide detail on how the supported network has advanced telemedicine benefits:**

**a. Explain how the supported network has achieved the goals and objectives outlined in selected participant's Pilot Program application;**

Not applicable at this time.

**b. Explain how the supported network has brought the benefits of innovative telehealth and, in particular, telemedicine services to those areas of the country where the need for those benefits is most acute;**

Not applicable at this time.

**c. Explain how the supported network has allowed patients access to critically needed medical specialists in a variety of practices without leaving their homes or communities;**

Not applicable at this time.

**d. Explain how the supported network has allowed health care providers access to government research institutions, and/or academic, public, and private health care institutions that are repositories of medical expertise and information;**

Not applicable at this time.

**e. Explain how the supported network has allowed health care professional to monitor critically ill patients at multiple locations around the clock, provide access to advanced applications in continuing education and research, and/or enhanced the health care community's ability to provide a rapid and coordinated response in the event of a national crisis.**

Not applicable at this time.

**11. Provide detail on how the supported network has complied with HHS health IT initiatives:**

a. Explain how the supported network has used health IT systems and products that meet interoperability standards recognized by the HHS Secretary;
b. Explain how the supported network has used health IT products certified by the Certification Commission for Healthcare Information Technology;
c. Explain how the supported network has supported the Nationwide Health Information Network (NHIN) architecture by coordinating activities with organizations performing NHIN trial implementations;
d. Explain how the supported network has used resources available at HHS's Agency for Healthcare Research and Quality (AHRQ) National Resource Center for Health Information Technology;
e. Explain how the selected participant has educated themselves concerning the Pandemic and All Hazards Preparedness Act and coordinated with the HHS Assistant Secretary for Public Response as a resource for telehealth inventory and for the implementation of other preparedness and response initiatives; and

f. Explain how the supported network has used resources available through HHS's Centers for Disease Control and Prevention (CDC) Public Health Information Network (PHIN) to facilitate interoperability with public health and emergency organizations.

Not applicable at this time.

**12. Explain how the selected participants coordinated in the use of their health care networks with the Department of Health and Human Services (HHS) and, in particular, with its Centers for Disease Control and Prevention (CDC) in instances of national, regional, or local public health emergencies (e.g., pandemics, bioterrorism). In such instances, where feasible, explain how selected participants provided access to their supported networks to HHS, including CDC, and other public health officials.**

Not applicable at this time.