Before the
Federal Communications Commission
Washington, D.C. 20554

In the Matter of

Petition For Declaratory Ruling From Sprint Nextel to Allow Wideband Operations in the 800 MHz Enhanced Specialized Mobile Radio Service Bands.	))))	WT Docket No. 11-110

REPLY COMMENTS OF SPRINT NEXTEL CORPORATION

I. INTRODUCTION

In response to the *Public Notice* issued by the Federal Communications Commission ("Commission")[1] regarding Sprint Nextel Corporation's ("Sprint Nextel") above-captioned Petition for Declaratory Ruling ("Petition"), comments were filed by the Association of Public-Safety Communications Officials-International, Inc. ("APCO"), AT&T, Inc. ("AT&T"), the Enterprise Wireless Alliance ("EWA"), the Mobile Broadband Coalition ("MBC"),[2] Motorola Solutions, Inc. ("MSI"), the National Public Safety Telecommunications Council ("NPSTC"), Region 54 700 MHz RPC ("Region 54")[3], and Southern Communications Services, Inc. d/b/a SouthernLINC Wireless ("Southern").

The majority of the commenters do not oppose the Commission clarifying that its rules permit channels larger than 25 kHz in the 800 MHz Enhanced Specialized Mobile Radio Service ("ESMR") band.[4] EWA, Southern and the MBC support grant of the Petition and requested

---

[1] *Wireless Telecommunications Bureau Seeks Comment on Petition From Sprint Nextel to Allow Wideband Operations in the 800 MHz Enhanced Specialized Mobile Radio Service Bands*, WT Docket No. 11-110, Public Notice, DA 11-1152, rel. June, 30, 2011 ("*Public Notice*").

[2] The MBC consists of Smartcomm, LLC; Caribe Spectrum Holdings, Inc.; Preferred Spectrum Investments, LLC; and Concepts to Operations, Inc.

[3] Region 54 supports APCO's comments.

[4] The post-band reconfiguration ESMR band consists of the frequency blocks 817-824/862-869 MHz.

clarification. APCO and NPSTC do not oppose clarification *per se,* but emphasize the importance of protecting public safety licensees from harmful interference related to 800 MHz commercial operations. They suggest that the Commission delay wideband operations in the ESMR band in any of the 55 National Public Safety Planning Committee ("NPSPAC") Regions until 800 MHz Reconfiguration is completed in that Region.[5] MSI and AT&T state that a rulemaking proceeding is warranted to ensure adjacent services are protected from potential interference.

As detailed below, the Commission should expeditiously clarify, through declaratory ruling or otherwise, that ESMR licensees may deploy channels wider than 25 MHz in the ESMR band. The Commission's rules and policies already impose the operational protections needed to minimize the risk of harmful interference to public safety and other narrowband licensees pending completion of 800 MHz reconfiguration in a NPSPAC Region. Moreover, the rules, regulations and policies the Commission adopted in the 800 MHz Reconfiguration Proceeding minimize the risk of harmful interference to public safety operations once reconfiguration is completed in a NPSPAC Region -- regardless of whether an ESMR licensee, such as Sprint Nextel, operates 25 kHz or larger channel bandwidths. Accordingly, conducting a rulemaking would be unnecessary, unwarranted and wasteful of the Commission's valuable time and administrative resources.

---

[5] *See Improving Public Safety Communications in the 800 MHz Band, Consolidating the 900 MHz Industrial/Land Transportation and Business Pool Channels,* Report and Order, Fifth Report and Order, Fourth Memorandum Opinion and Order, and Order, 19 FCC Rcd 14969, (2004) (FCC 04-168), as amended by Erratum, WT Docket No. 02-55 (rel. Sep. 10, 2004); Second Erratum, 19 FCC Rcd 19651 (2004); Public Notice, 19 FCC Rcd 21492 (2004); and Third Erratum, 19 FCC Rcd 21818 (2004) ("*800 MHz R&O*") (subsequent history omitted).

II. THE COMMENTS SUPPORT GRANTING THE PETITION AND CLARIFYING THE RULES TO PERMIT WIDEBAND OPERATIONS IN THE 800 MHz ESMR BAND

EWA urges the Commission to issue a Declaratory Ruling consistent with the Petition.[6] EWA agrees with Sprint Nextel that the text in the Commission's decision in 1995 to create the "upper 200" 800 MHz geographic area channel blocks, that now comprise the lower portion of the ESMR band, clearly evidences an intention to permit wideband operations on those channels.[7] EWA noted that the Commission described the genesis of the rule change as follows:

> In the CMRS Third Report and Order, we determined that assigning contiguous spectrum, where feasible, is likely to enhance the competitive potential of geographic area SMR providers. We indicated our belief that contiguous spectrum is essential to competitive viability of a wide-area SMR system because it permits use of spread spectrum and other broadband technologies that are available to other CMRS providers but unavailable to systems operating on non-contiguous spectrum.[8]

Further, EWA points out that the Commission supported its decision to adopt wide-area geographic licensing in the 800 MHz band with the following explanation:

> We conclude that a portion of the 800 MHz SMR spectrum should be designated for wide-band area licensing. Notably commenters in the CMRS proceeding contended that wide-area SMR systems need contiguous spectrum to obtain flexibility to implement advanced technologies and thereby compete effectively with other CMRS providers such as cellular and broadband PCS systems.[9]
>
> … we believe that contiguous spectrum is an essential component of the wide area licensing proposal we adopt today because it will give licensees the flexibility to use technologies that can operate on either contiguous or non-contiguous spectrum.

---

[6] EWA Comments at p. 2. EWA conditions its support for a Declaratory Ruling on the Commission being satisfied that wideband technologies can be implemented without increasing the possibility of interference to other 800 MHz licensees. Sprint Nextel provides additional information in section IV below demonstrating that CDMA is no more likely and often less likely than the current Motorola Mobility iDEN® technology deployment to cause interference to other 800 MHz licensees.

[7] EWA Comments at p. 3-4.

[8] Amendment of Part 90 of the Commission's Rules to Facilitate Future Development of SMR Systems in the 800 MHz Frequency Band, *First Report and Order, Eight Report and Order, and Second Further Notice of Proposed Rule Making*, PR Docket No. 93-144, 11 FCC Rcd 1463 at ¶ 9 (1995) ("8*00 MHz SMR Order*").

[9] *Id.* at ¶ 13.

> Significantly, licensees' technological options are considerably more limited under a predefined channelization plan.[10]

Moreover, EWA notes that in this same proceeding the Commission adopted Section 90.691,[11] which applied out-of-band emission restrictions only to the "outer" channels of geographic area SMR and ESMR licenses, and explained its decision as follows:

> We conclude that out-of-band emission rules should apply only to the "outer" channels included in an EA license and to spectrum adjacent to interior channels used by incumbents. We believe that these channels alone have the potential to affect operations outside of the EA licensees authorized bandwidth.[12]

Based on these Commission statements, EWA concludes that the Commission intended its 1995 decision to permit deployment of wideband technologies on the ESMR spectrum and that it seems likely that the apparent discrepancy between rule sections 90.209[13] and 90.691 was inadvertent, as assumed in the Petition.[14]

Southern also urges the Commission to grant the Petition and clarify that ESMR band licensees may deploy technologies that require greater than 25 kHz bandwidth. Southern submits that the requested Declaratory Ruling would be technology-neutral, would promote regulatory parity among CMRS providers and would encourage the competitive deployment and greater availability of mobile broadband technologies and services for consumers.[15] Southern concurs with Sprint Nextel's analysis demonstrating that the Commission's intent and purpose was to ensure regulatory parity for geographic area licensees in the ESMR band, and that the application of the general 25 kHz bandwidth provision of Section 90.209 would frustrate the Commission's objectives. Therefore, Southern agreed that the Commission should clarify that

---

10 *Id.* at ¶ 14.
11 47 C.F.R. §90.691.
12 *800 MHz SMR Order* at ¶ 101.
13 47 C.F.R. §90.209.
14 EWA Comments at p. 4.
15 Southern Comments at p. 1-2.

the more narrowly focused language of Section 90.691 in Part 90 Subpart S[16] permits wideband operations on Basic Economic Area ("EA") licensees' contiguous channels as long as "outer" channels included in the EA license comply with the out-of-band emission requirements.[17] Southern emphasizes that such a clarification should apply to all ESMR frequencies, including the expanded ESMR band in the southeastern U.S. (*i.e.,* 813.5-824/858.5-869 MHz).[18] Sprint Nextel agrees with Southern's additional request for clarification.

The Mobile Broadband Coalition ("MBC") also supports Sprint Nextel's Petition. MBC further recommends repurposing the entire 806-824/851-869 MHz band to a flexible use and market- based approach similar to that adopted by the Commission for the 700 MHz band.[19]

In contrast, MSI and AT&T recommend that the Commission initiate a rulemaking proceeding. MSI points to the potential impact of intermingling wideband technology with public safety 25 kHz systems that continue to populate the "old" NPSPAC band (821-824/866-869 MHz).[20] As discussed below, however, MSI may not have realized that *Sprint Nextel will not be able to deploy broadband technology, such as CDMA, in the 821-824/866-869 MHz portion of the ESMR band in a NPSPAC Region until all incumbent public safety licensees in the Region have retuned to the "new" NPSPAC band (806-809/851-854 MHz)*;[21] this makes MSI's

---

[16] Regulations Governing Licensing and Use of Frequencies in the 806-824, 851-869, 896-901, and 935-940 MHz Bands.

[17] Southern Comments at p. 3.

[18] *Id.* at p. 4-5.

[19] MBC Comments at p. 2. Sprint Nextel appreciates MBC's support for the Commission clarifying that wider–than-25 kHz bandwidths are permissible in the ESMR channels. Sprint Nextel respectfully submits, however, that MBC's recommendation for additional 800 MHz band flexibility is beyond the narrow scope of this limited proceeding.

[20] MSI Comments at p. 2.

[21] CDMA technology requires access to approximately 1.5 MHz of contiguous 800 MHz spectrum (or approximately 62 contiguous 25 kHz 800 MHz channels). Until 800 MHz band reconfiguration is complete in a given Region, Sprint Nextel will not be able to aggregate sufficient contiguous spectrum *in the old NPSPAC band* within which to place a CDMA channel due to the spectral location of the five mutual aid channels that remain in place until reconfiguration is completed in the Region, as well as any remaining unreturned public safety incumbents.

"intermingling" concerns irrelevant. In addition, the attached technical information demonstrates that deploying CDMA in the 862 - 866 MHz ESMR sub-band is *at worst* no more likely to contribute to harmful interference with public safety systems than Motorola Mobility's iDEN® technology currently deployed by Sprint Nextel throughout the 800 MHz band.

AT&T points out that Declaratory Rulings are intended to terminate controversy or remove uncertainty, and that a rulemaking proceeding provides all affected parties an opportunity to discuss the ramifications of the proposal.[22] Sprint Nextel's Petition fully described the apparent conflict between Section 90.209 of the rules, which restricts operations to 25 kHz operations in the 800 MHz band, and the Part 90 Subpart S rules (specifically Section 90.691) which permits wider bandwidth operations on contiguous block EA licenses so long as such operations conform to the Commission's out-of-band emission requirements. This is precisely the kind of uncertainty and apparent inconsistency between Commission rules that declaratory rulings are designed to resolve.[23] Moreover, this proceeding has provided a fully transparent opportunity for any interested party to engage with representatives of the 800 MHz Public Safety community, Business/Industrial licensees and CMRS licensees. AT&T provides no basis for further proceedings or delay.[24]

---

[22] AT&T Comments at p. 2-3.

[23] *See* Petition at p. 2-3.

[24] Sprint Nextel notes that AT&T, a Cellular A band licensee (824-835/869-880 MHz and 845-846.5/890-891.5 MHz) is also a documented contributor to the 800 MHz CMRS - public safety interference problem which necessitated 800 MHz band reconfiguration in the first place. AT&T previously sought to disavow any of its contribution to 800 MHz CMRS - public safety interference for years and vigorously opposed Sprint Nextel and public safety's efforts to reconfigure the 800 MHz band to virtually eliminate the risk of CMRS – public safety interference.

III. SPRINT NEXTEL WILL DEPLOY ITS CDMA OPERATIONS ONLY IN THE ESMR SUB-BAND (817-821/862-866 MHz) PENDING COMPLETION OF 800 MHz BAND RECONFIGURATION IN A NPSPAC REGION

APCO and NPSTC do not oppose CDMA deployment in the ESMR band or suggest that a rulemaking proceeding is necessary; they would, however, prohibit wideband technologies until 800 MHz Reconfiguration is completed in a Region.[25] APCO and NPSTC submit that this restriction will protect from possible interference public safety communications which have not yet retuned from the previously-designated NPSPAC channels (821-824/866-869 MHz) to the new NPSPAC band (806-809/851-854 MHz). APCO and NPSTC also recommend that a one megahertz guard band be maintained from any public safety operations to prevent interference to adjacent Regions.[26] Importantly, however, neither APCO nor NPSTC provide any technical analysis supporting their apparent concerns, nor even attempt to explain why these additional restrictions may be warranted given the ongoing obligations of any ESMR licensee to minimize the risk of interference to 800 MHz public safety operations – both before and after reconfiguration is completed in a NPSPAC Region.[27]

As discussed above, Sprint Nextel will not deploy CDMA operations in the "old" NPSPAC band (821-824/866-869 MHz) in any Region until after the 800 MHz band Reconfiguration transition is completed in that Region.[28] Instead, Sprint Nextel will deploy its 800 MHz broadband operations solely in the 817-821/862-866 MHz portion of the ESMR band, wholly separated from public safety operations, in a segment of the 800 MHz band in which it has held 800 MHz licenses and operated for more than a decade and is not interleaved with any public safety channels or operations. As a result, Sprint Nextel's 800 MHz CDMA deployments

---

[25] APCO Comments at p. 2; NPSTC Comments at p. 1, 4-5.
[26] APCO Comments at p. 2; NPSTC Comments at p. 6-7.
[27] *See* 47 CFR § 90.673 and 47 CFR § 90.674.
[28] *See* footnote 22, *supra*.

prior to completing 800 MHz Reconfiguration in a Region will inherently provide a one megahertz guard band from any remaining adjacent public safety operations in the old NPSPAC band. These factors alone should ameliorate concerns by public safety that Sprint Nextel's operations will be intermingled with public safety's remaining operations in the old NPSPAC band prior to completion of their retuning to the new NPSPAC band.[29]

IV. SPRINT NEXTEL'S TECHNICAL SHOWING DEMONSTRATES ITS CDMA DEPLOYMENT WILL NOT INCREASE INTERFERENCE TO PUBLIC SAFETY SYSTEMS

Sprint Nextel has used its experience and expertise in managing the risk of public safety interference at 800 MHz to guide the development and adoption of stringent equipment specifications to ensure that its prospective 800 MHz CDMA operations will create no greater risk of interference to 800 MHz public safety communications than would occur from its post-reconfiguration Motorola Mobility iDEN® network operations. Among other things, Sprint Nextel has imposed extremely tight out-of-band emissions (OOBE) filtering requirements on base station vendors for frequencies below 861 MHz and aggressive OOBE roll-off requirements between 861-862 MHz.[30] In addition, to minimize the risk of interference in NPSPAC Regions that have not completed 800 MHz reconfiguration, Sprint Nextel has specified tight OOBE filtering requirements for base stations and user devices to protect remaining public safety NPSPAC operations at 866-869 MHz.[31] These measures provide added certainty that broadband

---

[29] In its latest Status Report on 800 MHz Band Reconfiguration, filed August 1, 2011 in WT Docket No. 02-55, Sprint Nextel reported that in twelve NPSPAC Regions all 800 MHz licensees required to be retuned have completed their retunes. Accordingly, Sprint Nextel reported that the Wisconsin, Iowa, Montana, Alaska, Minnesota, North Dakota, Nevada, Utah, Colorado, Hawaii, Wyoming and South Dakota NPSPAC Regions have fully completed 800 MHz band reconfiguration.

[30] *See* 800 MHz R&O at paragraph 158.

[31] A description of Sprint Nextel's planned CDMA base station emission mask is attached as Exhibit A, along with letters from each of its three vendors working with Sprint Nextel on its 800 MHz CDMA deployment. Each vendor indicates its commitment to comply with Sprint Nextel's rigorous base

CDMA operations in the 800 MHz ESMR band do not increase the risk of public safety interference over that expected from Sprint Nextel's post-800 MHz reconfiguration use of the Motorola Mobility iDEN® network.

In addition, Sprint Nextel's research demonstrates that its planned CDMA deployment in the 800 MHz ESMR band is less likely than its current iDEN® system operations to cause interference to other 800 MHz communications operations below 817/862 MHz. This is because CDMA transmissions employ significantly lower power spectrum density than iDEN® transmissions.[32] The significantly lower power spectral density of CDMA signals makes it much less likely that intermodulation interference would occur within a public safety receiver.[33] For the same reasons, the strength of any CDMA intermodulation products that may occur should be lower than for iDEN®-only intermodulation products, thereby reducing the risk that the intermodulation product would result in unacceptable interference.[34]

---

station requirements and acknowledgement of the need to protect public safety in the present RF environment.

[32] For example, if both iDEN® and CDMA base stations are transmitting at a typical power level of 40 dBm per channel, the power spectral density within a 25 kHz channel being used by a public safety or other non-cellular 800 MHz incumbent would be: iDEN® transmit power = 40 dBm per 25 kHz channel; CDMA transmit power = 40 dBm per 1.25 MHz channel; ≈ 23 dBm per 25 kHz channel (or 2% of the power from an iDEN® transmission).

[33] Paragraph 91 of *Report and Order, Fifth Report and Order, Fourth Memorandum Opinion and Order, and Order,* WT Docket 02-55, ET Docket No. 00-258, RM-9498, RM-10024, and ET Docket No. 95-18, FCC 04-168, released August 6, 2004 (Report and Order) contains a good discussion of intermodulation interference. Such interference occurs when "**strong** signals with the appropriate mathematical relationship are presented to the public safety receiver." [emphasis added]. Because CDMA signals provide much less power than iDEN signals on a particular 12.5 kHz or 25 kHz frequency channel, a public safety receiver is much less likely to have sufficiently strong signals to generate an intermodulation product that could cause interference. At the same time, however, any intermodulation interference that does occur would likely cover a broader number of 25 kHz channels because of the wider bandwidth of the CDMA signal.

[34] A test report is attached as Exhibit B that provides the results of testing Sprint Nextel performed over the past year involving CDMA modulation on its 800 MHz spectrum. The testing confirmed that intermodulation interference is less severe for CDMA transmissions compared to the Motorola Mobility iDEN® network operations.

Consistent with its past practice of notifying public safety licensees of significant changes in the 800 MHz radio-frequency ("RF") environment,[35] Sprint Nextel will provide a minimum of 30-days advance notice to 800 MHz public safety licensees having base stations in the applicable NPSPAC Region, as well as public safety licensees having base stations within 70 miles of the NPSPAC Region border, prior to its 800 MHz CDMA deployment to ensure that they are aware of Sprint Nextel's deployment. Over the past decade, Sprint Nextel has consistently demonstrated that it takes seriously its responsibility to minimize the risk of contributing to unacceptable interference to public safety and other non-cellular operations in the 800 MHz band. Sprint Nextel acknowledges its strict responsibility, pursuant to Section 90.673 of the Commission's Rules, to mitigate any unacceptable interference (as defined in 47 C.F.R. § 90.672) that occurs during the 800 MHz band reconfiguration transition or post reconfiguration. In addition, Sprint Nextel has implemented rigorous interference mitigation practices to resolve the small number of unacceptable interference problems that may nevertheless arise. Sprint Nextel assures the Commission that it has the same level of commitment to ensuring that its prospective 800 MHz broadband operations do not cause unacceptable interference to public safety and other non-cellular 800 MHz incumbents, and reiterates that it recognizes its strict responsibility, as specified in 47 C.F.R. § 90.673, to mitigate any unacceptable interference that may occur.

---

[35] *See* Letter from David Furth, Associate Bureau Chief, Public Safety and Homeland Security Bureau and Joel Taubenblatt, Acting Deputy Chief, Wireless Telecommunications Bureau to Lawrence R. Krevor and James B. Goldstein, Sprint Nextel Corporation, dated May 6, 2008 (DA 08-1074) updating the Commission's database to specify Sprint Nextel's right to operate in the 821-824/866-869 MHz portion of the 800 MHz band on an interleaved basis during 800 MHz band reconfiguration and adopting a notification process prior to Sprint Nextel operating in the old NPSPAC band during the 800 MHz band reconfiguration transition.

V. CONCLUSION

Accordingly, for all the reasons discussed above, the Commission should expeditiously clarify that its rules permit ESMR licensees, including Sprint Nextel, to deploy bandwidths wider than 25 kHz in the 817-824/862-869 MHz portion of the 800 MHz band and that Sprint Nextel, and any other ESMR band EA licensee, may deploy broadband technology in the 800 MHz ESMR band using its EA licenses under the conditions described above.

Respectfully submitted,

/s/ James B. Goldstein_____

James B. Goldstein, Esq.
Director, Spectrum Reconfiguration
Robert H. McNamara, Esq.
Director, Spectrum Management
12502 Sunrise Valley Drive
Reston, VA 20196
(703) 433-4212

August 16, 2011

Exhibit A – BTS Emission Mask and Letters from Sprint Nextel's Vendors

15th August, 2011
Mr. Larry J. Krevor
Vice President, Government Affairs
Sprint Nextel Corporation
900 7th St., NW – Suite 700
Washington, DC 20001

Dear Mr. Krevor,

As a supplier of Sprint Nextel's Network Vision base stations, Ericsson understands that Sprint's transmissions in the 800 MHz band cannot cause unacceptable interference to public safety and other non-cellular operations in the 800 MHz band, as specified in Sections 90.672 of the Federal Communications Commission's Rules.

Sprint has provided detailed base station performance specifications to Ericsson, including several requirements that will help avoid such unacceptable interference. Attached is a Sprint paper documenting a base station emission mask that Sprint has developed to ensure that unacceptable interference will not occur. Sprint's base station emission mask is also intended to ensure that the interference potential for CDMA operations at 800 MHz will be no greater than the risk of interference from post-rebanded iDEN operations.

I affirm that Ericsson is designing its base stations to comply with these emissions requirements, and I anticipate no difficulty in achieving such compliance. In addition, I affirm that Ericsson is familiar with the licensing environment that will exist at 800 MHz, both during rebanding and after rebanding is completed, and that we are designing the Sprint Nextel 800 MHz CDMA network deployment so as to further reduce the likelihood of interference.

Regards,

Gavin Saldanha
Radio Solutions Manager – Ericsson

Attachment (Sprint Nextel's "CDMA at SMR 800 MHz: BTS Emission Mask," August 2011)

SAMSUNG ELECTRONICS SAMSUNG TELECOMMUNICATIONS AMERICA

1301 E. Lookout Drive
Richardson, TX 75082
Tel.972.761.7000

Mr. Larry J. Krevor
Vice President, Government Affairs
Sprint Nextel Corporation
900 7th St., NW – Suite 700
Washington, DC 20001

August 16, 2011

Dear Mr. Krevor,

As a supplier of Sprint Nextel's Network Vision base stations, Samsung understands that Sprint's transmissions in the 800 MHz band cannot cause unacceptable interference to public safety and other non-cellular operations in the 800 MHz band, as specified in Sections 90.672 of the Federal Communications Commission's Rules.

Sprint has provided detailed base station performance specifications to Samsung, including several requirements that will help avoid such unacceptable interference. Attached is a Sprint paper documenting a base station emission mask that Sprint has developed to ensure that unacceptable interference will not occur and that the interference potential for CDMA operations at 800 MHz will be no greater than the risk of interference from post-rebanded iDEN operations.

SAMSUNG ELECTRONICS SAMSUNG TELECOMMUNICATIONS AMERICA

1301 E. Lookout Drive
Richardson, TX 75082
Tel.972.761.7000

I affirm that Samsung is designing its base stations to comply with these emissions requirements, and I anticipate no difficulty in achieving such compliance. In addition, I affirm that Samsung is familiar with the licensing environment that will exist at 800 MHz, both during rebanding and after rebanding is completed, and we are designing the Sprint Nextel 800 MHz CDMA network deployment with that licensing environment in mind.

Regards,

Thad Lowe
Senior Director
Network System Engineering

Attachment (Sprint Nextel's "CDMA at SMR 800 MHz: BTS Emission Mask," August 2011)

%ALCATEL-LUCENT At 08/15/11 03:51:50 PM Page 1From utf-8?Q?Chwazik,=20Rachel=20Elizabeth=20(Rachel)?

Mr. Larry J. Krevor
Vice President, Government Affairs
Sprint Nextel Corporation
900 7th St., NW – Suite 700
Washington, DC 20001

August 12, 2011

Dear Mr. Krevor,

As a supplier of Sprint Nextel's Network Vision base stations, Alcatel-Lucent understands that Sprint's transmissions in the 800 MHz band cannot cause unacceptable interference to public safety and other non-cellular operations in the 800 MHz band, as specified in Sections 90.672 of the Federal Communications Commission's Rules.

Sprint has provided detailed base station performance specifications to Alcatel-Lucent, including several requirements that will help avoid such unacceptable interference. Attached is a Sprint paper documenting a base station emission mask that Sprint has developed to ensure that unacceptable interference will not occur and that the interference potential for CDMA operations at 800 MHz will be no greater than the risk of interference from post-rebanded iDEN operations.

I affirm that Alcatel-Lucent is designing its base stations to comply with these emissions requirements, and I anticipate no difficulty in achieving such compliance. In addition, I affirm that Alcatel-Lucent is familiar with the licensing environment that will exist at 800 MHz, both during rebanding and after rebanding is completed, and we are designing the Sprint Nextel 800 MHz CDMA network deployment so as to further reduce the likelihood of interference.

Regards,

Joy Chacko
CDMA Product Management

Attachment (Sprint Nextel's "CDMA at SMR 800 MHz: BTS Emission Mask," August 2011)

Alcatel·Lucent

600-700 MOUNTAIN AVENUE
MURRAY HILL, NEW JERSEY USA 07974

T: +1 908 508 8080
F: +1 908 582 7641

www.alcatel-lucent.com

CDMA at SMR 800 MHz: BTS Emission Mask

Sprint Nextel
Technology Development & Strategy
August, 2011

1 Introduction

In the SMR 800 MHz band, post rebanding, Sprint Nextel will primarily control 7 MHz (817-824/862-869 MHz) in the United States, with some exceptions (Canada and Mexico borders, some shared markets). Because the SMR band itself is shared with Public Safety, strict requirements were specified by the FCC to protect Public Safety users from harmful interference. These requirements led to the Base Station (BTS) emission mask detailed in this document. This mask is significantly stricter than the FCC emission mask specified in 47 CFR § 90.691 as well as the CDMA emission mask defined by 3GPP2.[1] This mask is also intended to avoid unacceptable interference to non-cellular licensees in the 800 MHz band, as defined in 47 CFR § 90.672. Sprint Nextel developed this mask based on the performance of special filtering that was developed for post-rebanding iDEN use, and which has been used during band reconfiguration to limit iDEN interference to public safety and other non-cellular licensees, with the goal of ensuring that the risk of interference from CDMA would be no greater than the risk of interference from post-rebanded iDEN operations.

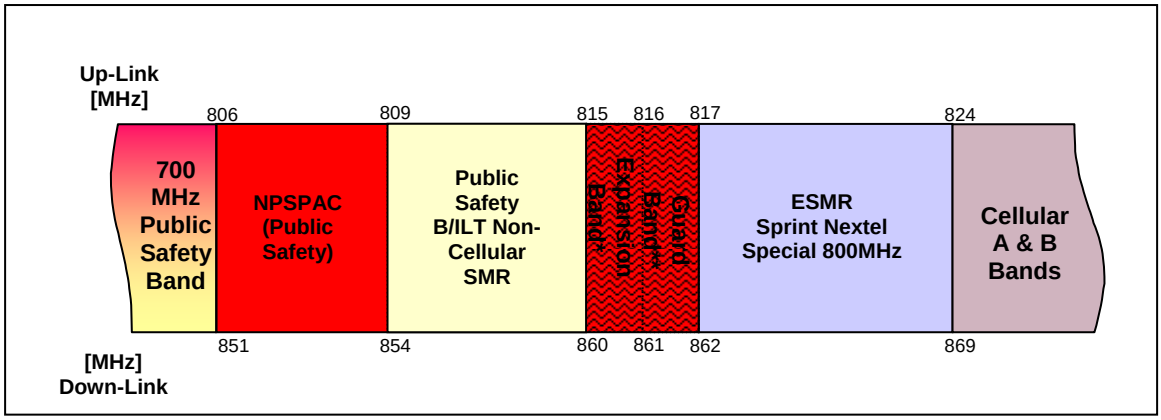

Figure 1: Layout of Post-Rebanded SMR 800 MHz Band

2 BTS Emission Mask

There are two basic parts to Sprint Nextel's Public Safety BTS emission mask: protection of Public Safety below the Sprint Nextel-owned block and protection of yet-to-be retuned Public Safety incumbent licensees who remain licensed on the Sprint Nextel-owned block. The full Public Safety mask is shown in Figure 2. All values are shown with a resolution bandwidth of 25 kHz.

[1] C.S0010-B: Recommended Minimum Performance Standards for CDMA2000 Spread Spectrum Base Stations, 3GPP2, Rel. C, v2.0, Feb. 2004.

Copyright © 2011 Sprint Nextel Corporation

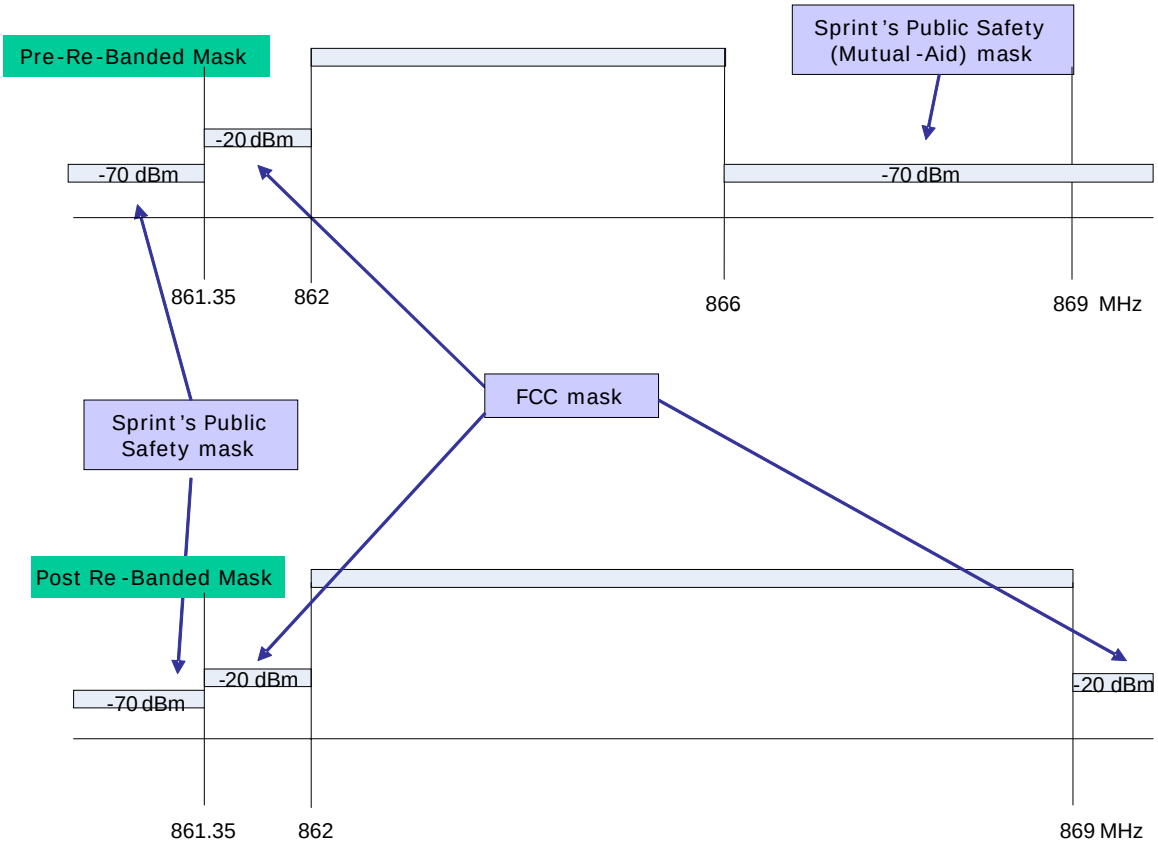

Figure 2: CDMA-800 BTS Emission Mask

800 MHz Public Safety must always be protected to FCC requirements. While rebanding is still underway, unrebanded NPSPAC systems and NPSPAC Mutual Aid channels (821-824/866-869 MHz) must still be protected. This protection is no longer required once rebanding is complete.

- At the Sprint Nextel-owned block edge, the FCC emission mask [47 CFR § 90.691] requires emissions to be attenuated to -20dBm/25kHz.[2]
- Protection of Public Safety [47 CFR § 90.672] requires additional attenuation at 866.0 MHz and above before rebanding is completed, and at 861.35 MHz and below pre- and post-rebanding.[3]

[2] 47 CFR § 90.691 specifies different emission limits depending on how far the frequency of the emission is from the edge of Sprint Nextel's frequency block. The FCC's -20 dBm limit applies under certain conditions for emissions within 37.5 kHz from Sprint Nextel's frequency block; beyond 37.5 kHz, the FCC's limit is -13 dBm. Sprint Nextel requires compliance with the stricter -20 dBm limit for the 861.35-862.0 MHz band, and for frequencies 869.0 MHz and higher. In order to meet the stricter -70 dBm requirement at 861.35 MHz, the actual transmitter emissions will be significantly less than -20 dBm for much of the 861.35-862.0 MHz band.

[3] *See* FCC 04-168, figure 1 at para. 158.

Copyright © 2011 Sprint Nextel Corporation

- Pre-rebanding, total emissions at 861.35 MHz and below and at 866.0 MHz and above must be no greater than -70dBm/25kHz.
- Once rebanding is complete, total emissions at 861.35 MHz and below must be no greater than -70dBm/25kHz. No Mutual Aid mask is required.

Copyright © 2011 Sprint Nextel Corporation

Exhibit B – 800 MHz CDMA Testing Report

Intermodulation Interference Test Results for CDMA Operations in 800 MHz ESMR Band

Summary

Sprint Nextel conducted numerous tests to validate that CDMA operations in Sprint Nextel's 800 MHz ESMR band (817-824 MHz/862-869 MHz) are not likely to result in any greater risk of interference to public safety operations than the very low risk that would exist from Sprint Nextel's re-banded iDEN operations in the same spectrum. This report summarizes testing that was done with respect to intermodulation products that may be formed in public safety receivers when located in the presence of high signal levels on nearby frequencies.

Overview

Sprint Nextel tested several current public safety (PS) receivers, both portables and mobiles, from EF Johnson, Motorola, and M/A-COM in an RF screen room at a Sprint Nextel facility in Lenexa, KS.[1] We first validated, through TIA-603-C standard procedures, that the receivers and the test setup were operating properly and within published specifications. We then tested the receivers, using modified TIA-603 procedures, to determine how susceptible they were to intermodulation interference generated within the receiver from iDEN, GSM, FM and CDMA transmissions in the ESMR band and, in some cases, the adjacent cellular A block (869-880 MHz).

Receiver Specification and Test Setup Validation

First, as noted above, we tested all receivers and test equipment to determine that they were working properly. This testing also provided baseline measurements of receiver signal levels for different signal quality levels.

Sprint Nextel conducted these baseline tests pursuant to TIA-603-C Land Mobile FM or PM Communications Equipment Measurement and Performance Standards (all section numbers refer to this document). The published reference sensitivity for each receiver is specified for a signal-to-noise and distortion (SINAD) ratio of 12 dB, which gives a quantitative evaluation of the

---

[1] Testing was done on Motorola models XTS2500, XTS1500, XTL1500 and XTL2500 transceivers, EF Johnson models 5100 (with and without a keypad) and RS-5300 transceivers, and M/A-COM models P7100 and M7100 transceivers. We tested all transceivers during our intermodulation interference testing project; however, for some testing scenarios we tested a representative subset of those transceivers.

quality of the received signal.[2] As shown in the following table, each public safety receiver met or exceeded its published receiver sensitivity. In addition, all of the receivers met the minimum public safety receiver reference sensitivity requirement of -116 dBm specified in Section 90.672(b) of the Commission's Rules.[3]

We also measured receiver sensitivity using SINAD readings of 17 and 20 dB, providing a baseline of how much stronger a received signal must be in order to provide an improved quality of signal reception.[4]

Reference Sensitivity Test					
	12 dB SINAD				
Receiver	**Published**	**Measured**	**17 dB SINAD**	**20 dB SINAD**	
1	-119	-124	-122	-120	Portables
2	-119	-124	-122	-120	
3	-119	-124	-122	-120	
4	-119	-123	-117	-114	
5	-119	-123	-117	-114	
6	-119	-120	-115	-111	
7	-119	-121	-115	-112	
8	-116	-122	-116	-112	Mobiles
9	-117	-117	-112	-109	
10	-119	-121	-115	-112	
11	-119	-121	-116	-112	

[2] SINAD is defined as: (P signal + P noise + P distortion) / (P noise + P distortion), where P is power. Section 2.1.4 of TIA-603 specifies that reference sensitivity is measured with a SINAD of 12 dB.

[3] Voice transceivers capable of operating in the 806-824 MHz portion of the 800 MHz band must have a minimum reference sensitivity of -116 dBm, along with specific intermodulation rejection and adjacent channel rejection performance, in order for the system in which such transceivers are used to claim entitlement to full protection against unacceptable interference. *See* 47 CFR § 90.672(b).

[4] The Commission's rules specify that unacceptable interference occurs when several conditions are met. One of those conditions is that the voice transceiver is receiving an undesired signal or signals which cause the measured Carrier to Noise plus Interference (C/(I+N)) ratio of the receiver section of said receiver to be less than 20 dB. *See* 47 CFR § 90.672(a)(1)(ii)(B). While SINAD and C/I+N measurements are not identical, in general the two measurements track each other (that is, as C/I+N increases, SINAD increases). TIA-603 also discusses testing of reference sensitivity and intermodulation interference only based on SINAD measurements. In measuring SINAD levels of 17 dB and 20 dB, and at SINAD levels of 22 dB for some intermodulation testing, we were attempting to provide a consistent qualitative assessment of the receiver sensitivity and the intermodulation interference potential.

Intermodulation Test Setup

We used several RF sources, including signal generators capable of generating CDMA, iDEN, and GSM signals, and two test CDMA transmitters from different manufacturers, to generate "undesired" signals in the ESMR band and in the cellular A block spectrum that might result in intermodulation products within the public safety receiver under test.[5] These signals were sent through filters to eliminate any possibility of OOBE that might affect the results. The undesired or "primary" signals were then combined with the desired frequency signal and fed into the public safety land mobile radio (LMR) receiver being tested. Figure 1 shows a block diagram of the test setup.

Figure 1: Block Diagram of Test Setup

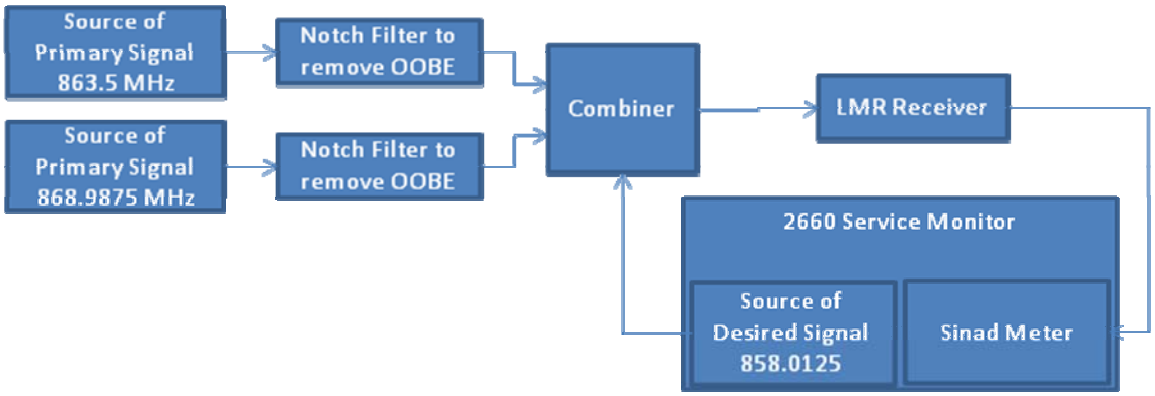

We chose primary frequencies within the SMR band such that the mathematical product of the two frequencies would fall on the desired public safety frequency.[6] We measured the degrading result of any intermodulation interference by increasing the desired public safety frequency

---

[5] Intermodulation interference can occur when strong signals with the appropriate mathematical relationship are received in the public safety receiver and cause the active elements in the first stages of the receiver to operate in a nonlinear manner. *See Report and Order* at para. 91. "The incoming undesired signals mix in the receiver and produce a third frequency—an intermodulation product—which can either correspond or fall near the frequency on which the user of the radio is attempting to communicate…Intermodulation products are categorized according to 'order' and can result from the interaction of two or more frequencies. Thus, in the case of two-frequency (F1 and F2), third-order, intermodulation, the intermodulation products (P) within the 800 MHz band are calculated by: Pintermod. = 2*F1-F2 and Pintermod. = 2*F2-F1. … Intermodulation products can also be generated by interaction of three or more transmitters, for example, some third-order, three frequency (F1, F2 and F3) intermodulation products falling in the 800 MHz band can be calculated by Pintermod. = F1+F2 - F3 and Pintermod. = F2-F1+F3. In general, within the 800 MHz band, fifth order and higher intermodulation products are less significant than third-order products. The greater the number of frequencies involved, the greater the number of intermodulation products generated."

[6] The primary frequencies needed to be within the SMR band so that they would fall within the band-pass filter of the public safety receiver being tested.

signal to the level necessary to overcome the interference with a specific SINAD signal quality, as described in TIA-603.

Different combinations of primary frequency signal sources were combined to create an intermodulation product located on the desired signal frequency. Each primary frequency signal was set to a power level of -25 dBm at the output of the signal generator.[7] These signals were then combined and fed to the antenna port of the public safety receiver. We found the reference sensitivity through the test setup, with no primary frequency inputs, was -114 dBm, which indicated that the loss in the test setup (through cabling and the combiner) was 7 dB.

Two-channel Testing of iDEN, CDMA, and FM Signal Combinations

For this test, we chose primary signal frequencies of 863.5 MHz and 868.9875 MHz. The 3rd order intermodulation product falls on 858.0125 MHz (863.5 MHz X 2 – 868.9875 MHz), and we chose that frequency as the frequency for the desired signal.

[7] In Appendix E to the *Report and Order*, discussing "Enhanced Best Practices," the Commission describes a -25 dBm signal level as a "very strong … signal" that can create high levels of intermodulation interference to nearby public safety receivers. In our experience, such signal levels are extremely rare. Thus, in choosing to test at this power level for the primary frequency signals, we have tested at worst-case conditions.

We performed this testing on two portable public safety receivers, each from a different manufacturer. We obtained the following test results on public safety receiver #2 (as indicated in the reference sensitivity testing table above):

Portable 2					
Primary Signal Source 863.5 MHz		Sig Gen iDEN	Vendor 1 CDMA transmitter	Sig Gen iDEN	Vendor 2 CDMA transmitter
Primary Signal Source 868.9875 MHz		Sig Gen FM	Sig Gen FM	Sig Gen CDMA	Sig Gen FM
		Desired Signal level to achieve 22 dB SINAD			
Test Frequencies (MHz)	851.0125	-109 dBm	-111 dBm	-109 dBm	-112 dBm
	854.8625	-109 dBm	-111 dBm	-109 dBm	-112 dBm
	855.0375	-109 dBm	-111 dBm	-109 dBm	-112 dBm
	855.1625	-109 dBm	-111 dBm	-109 dBm	-112 dBm
	855.2625	-109 dBm	-111 dBm	-109 dBm	-112 dBm
	855.4375	-109 dBm	-111 dBm	-109 dBm	-112 dBm
	856.2375	-95 dBm	-110 dBm	-95 dBm	-111 dBm
	857.0875	-101 dBm	-90 dBm	-96 dBm	-91 dBm
	857.5625	-102 dBm	-86 dBm	-82 dBm	-86 dBm
	858.0125	-62 dBm	-85 dBm	-80 dBm	-83 dBm
	858.8625	-101 dBm	-89 dBm	-97 dBm	-90 dBm

Desired Frequency

Range of Intermodulation Product

We performed four tests on this receiver using different primary frequency signal modulations:

- iDEN and FM (modulated with a 1 kHz tone and 60% of the maximum frequency deviation)
- CDMA (from one test transmitter) and FM
- iDEN and CDMA (from signal generators)
- CDMA (from the other test transmitter) and FM

We tested combinations of CDMA with iDEN and FM signals, since both iDEN and FM signals are present, and will continue to be present, in the 800 MHz band. We calculated the range of the intermodulation product for each test, and have indicated in yellow those desired test frequencies that fall within that range.

As can be seen, our testing of this receiver confirmed that the primary signal combinations where CDMA was involved caused significantly lower levels of interference than the scenario where iDEN signals were mixed with an FM signal. The desired signal levels were obtained using a 22 dB SINAD quality level, which we found to result in stable signal level readings.[8] We note, however, that higher desired signal levels are necessary to obtain a 22 dB SINAD quality than

[8] While we attempted to measure with 12 dB SINAD readings, those measurements were unstable.

the 12 dB SINAD quality level specified in TIA-603. Thus, to some extent, these measurements may overstate the actual desired signal levels that are needed to overcome intermodulation interference.

We confirmed that the intermodulation interference was originating in the public safety receiver. First, we attempted to see the intermodulation product on a spectrum analyzer looking at the input to the public safety receiver, but could not see any intermodulation product. Second, with the public safety receiver set to the desired frequency (i.e., the center frequency of the intermodulation product), we found that varying the primary signal levels produced a nonlinear response in the ability of the public safety receiver to receive the desired signal.[9]

We obtained similar results on receiver #4 (also a portable but from another manufacturer):

Portable 4				
Primary Signal Source 863.5 MHz		Sig Gen iDEN	Vendor 2 CDMA transmitter	Sig Gen iDEN
Primary Signal Source 868.9875 MHz		Sig Gen FM	Sig Gen FM	Sig Gen CDMA
		Desired Signal level to achieve 22 dB SINAD		
Test Frequencies (MHz)	851.0125	-109 dBm	-112 dBm	-109 dBm
	854.8625	-108 dBm	-113 dBm	-108 dBm
	855.0375	-108 dBm	-113 dBm	-108 dBm
	855.1625	-109 dBm	-113 dBm	-108 dBm
	855.2625	-109 dBm	-112 dBm	-108 dBm
	855.4375	-109 dBm	-112 dBm	-108 dBm
	856.2375	-98 dBm	-112 dBm	-99 dBm
	857.0875	-103 dBm	-103 dBm	-101 dBm
	857.5625	-104 dBm	-97 dBm	-87 dBm
	858.0125	-68 dBm	-94 dBm	-85 dBm
	858.8625	-104 dBm	-100 dBm	-102 dBm

Desired Frequency

Range of Intermodulation

We performed three tests on this receiver using different primary frequency signal modulations:

- iDEN and FM
- CDMA (from one test transmitter) and FM
- iDEN and CDMA (from signal generators)

Only one representative CDMA test transmitter was used for this test. Earlier testing had shown similar results for both transmitters. In each case, we performed testing to confirm that the intermodulation interference was being formed in the receiver with a nonlinear response.

[9] Intermodulation interference occurs when a receiver is responding in a non-linear manner to signals on nearby frequencies. See footnote 8 above.

As in the previous test, the CDMA signal combinations produced lower levels of intermodulation interference than the iDEN – FM combination.

We performed similar, but not identical, testing on the other public safety receivers; however, the test results above are indicative of the results that would be obtained for other receivers. In particular, we note that portable 2 was the most susceptible to intermodulation interference and portable 4 was one of the least.

Additional Intermodulation Testing

We performed many other intermodulation tests involving more than two primary signals, including iDEN combined with CDMA, CDMA combined with CDMA, and CDMA combined with GSM, all for the purpose of examining the level of receiver intermodulation interference that occurs in public safety receivers. By far the worst level of intermodulation interference occurred when iDEN and FM signals were combined, as shown in the tests above where both portables required desired signal levels in the -60 dBm range to overcome the intermodulation product.

We have not provided the details of each of the other lab tests. However, the key results from those tests, which use the same test setup as described above, are:

- 3 iDEN carriers combined with a single CDMA carrier
  - portable 2 required -91.6 dBm desired signal for a 12 dB SINAD; 5 other portable receivers required desired signals of -93.9 dBm to -106.7 dBm for 12 dB SINAD; 4 mobile receivers required desired signals of -93.1 dBm to -115.0 dBm for 12 dB SINAD

- 3 iDEN carriers combined with 4 CDMA carriers
  - portable 2 needed -105.8 dBm desired signal for 12 dB SINAD; 4 other portable receivers required desired signals of -106.7 dBm to -115.2 dBm for 12 dB SINAD; 4 mobile receivers required desired signal levels of -104.8 dBm to -114.8 dBm for 12 dB SINAD

- 4 CDMA carriers from one test transmitter combined with 4 CDMA carriers from the other test transmitter
  - portable 2 required -103.8 dBm signal for 12 dB SINAD; another portable receiver required -108.4 dBm for 12 dB SINAD.

- 5 CDMA carriers from one test transmitter combined with one CDMA carrier in the cellular A-block
  - portable 2 required -92 dBm desired signal for 22 dB SINAD

- 8 carriers of GSM at the bottom of the Cellular A-Band combined with a 5 carrier CDMA signal

- portable 2 required a desired signal of -100 dBm for 22 dB SINAD as a worst case across the entire interleaved band. We could not detect any intermodulation interference for this testing scenario. Rather, the interference was due to low-level OOBE from the GSM and CDMA signals.

In all of these tests, we found that the intermodulation interference involving CDMA transmissions was less severe than intermodulation interference from iDEN signals.

UNSWORN DECLARATION UNDER PENALTY OF PERJURY
OF
PAUL TRACY, SPECTRUM SME

1. I, Paul Tracy, am a Subject Matter Expert on Spectrum and Interference related issues for Sprint Nextel Corporation. I have held this position for five years.

2. My relevant work experience includes the analysis and successful mitigation of over 800 cases of reported interference throughout the Eastern seaboard and mid-United States. I am also responsible for the evaluation and testing of new technology to ensure compliance with FCC rules and regulations regarding interference to Public Safety.

3. My responsibilities include management and coordination of engineers tasked with;

   (a) The analysis and mitigation of reported interference cases.

   (b) Spectrum activities related to Rebanding

   (c) Testing of vendor equipment designed to transmit CDMA on 800MHz

4. I am familiar with the Federal Communications Commission's Rules regarding the 800 MHz band, especially those rules governing interference from commercial mobile radio service ("CMRS") providers to public safety land mobile radio systems.

5. I participated in Sprint's testing regarding the interference potential associated with the introduction of CDMA into the 800 MHz band. I affirm that this Report truthfully represents the results of the testing performed by Sprint. I also concur with the conclusion that CDMA operations in the 800 MHz band will cause no more risk of interference to public safety operations than would be expected from post-rebanding iDEN operations.

I declare under penalty of perjury that the foregoing is true and correct.

Executed on 2/7/2011.

Paul Tracy

UNSWORN DECLARATION UNDER PENALTY OF PERJURY
OF
KEITH MATHERS, NATIONAL PUBLIC SAFETY MANAGER

1. I, Keith Mathers, am a National Public Safety Mitigation Manager for Sprint Nextel Corporation. I have held this position for six years.

2. My relevant work experience includes the analysis and successful mitigation of over 1000 cases of reported interference throughout the United States.

3. My responsibilities include management and oversight of market engineers tasked with the analysis and mitigation of reported interference cases.

4. I am familiar with the Federal Communications Commission's Rules regarding the 800 MHz band, especially those rules governing interference from commercial mobile radio service ("CMRS") providers to public safety land mobile radio systems.

5. I participated in Sprint's testing regarding the interference potential associated with the introduction of CDMA into the 800 MHz band. I affirm that this Report truthfully represents the results of the testing performed by Sprint. I also concur with the conclusion that CDMA operations in the 800 MHz band will cause no more risk of interference to public safety operations than would be expected from post-rebanding iDEN operations.

I declare under penalty of perjury that the foregoing is true and correct.

Executed on Feb 7, 2011.

Keith Mathers