State of Texas Interoperability Showing

for the establishment of a

700 MHz Interoperable Public Safety Wireless Broadband Network

Pursuant to PS Docket 06-229

November 4, 2011 v8.0

Prepared for submission to the FCC Public Safety Homeland Security Bureau

(Redline)

PREPARED BY THE TEXAS DEPARTMENT OF PUBLIC SAFETY INTEROPERABLE COMMUNICATIONS PROGRAM OFFICE

Table of Contents

A. Executive Summary 4
A.1 INTRODUCTION 4
A.2 STATE OF TEXAS OBJECTIVES FOR PS LTE 5
A.3 MULTI-VENDOR SYSTEM ARCHITECTURE SUMMARY 5
A.4 SUMMARY 7
B. Processes for Establishing and Sustaining Interoperability 7
B.1 PRIORITIZING "OPERABILITY" OVER "INTEROPERABILITY" 7
B.2 INTRA-STATE PROCESSES 8
B.3 INTER-STATE PROCESSES 9
C. System Architecture Overview 10
C.1 RADIO ACCESS NETWORK (RAN) ARCHITECTURE 10
C.2 CORE NETWORK ARCHITECTURE 11
C.3 INTERFACES 13
C.4 MOBILITY AND HANDOVER 13
C.4.1 3GPP COMPLIANT HANDOVER 13
C.4.2 ADJACENT NETWORK HANDOVER 14
C.4.3 MOBILE VPN 14
C.5 ROAMING 14
C.5.1 PLMN ID ASSIGNMENT 15
C.5.2 INTRA-SYSTEM ROAMING 15
C.5.3 INTER-SYSTEM ROAMING 15
C.5.4 ROAMING INTEROPERABILITY 15
C.5.5 ROAMING CONFIGURATIONS 16
C.6 PRIORITY ACCESS AND QOS 16
C.7 SECURITY 17
C.8 OVERALL SECURITY ARCHITECTURE 17
C.9 NETWORK DOMAIN SECURITY 17
C.10 MVPN ACCESS TO HOME 18
C.11 DEVICES 18
C.11.1 USB-MODEM 18
C.11.2 VEHICLE MODEM 18
C.11.3 SMARTPHONE 19
D. Applications 19
D.1 INTERNET ACCESS 19
D.2 VPN ACCESS TO ANY AUTHORIZED SITE AND TO HOME NETWORKS 19
D.3 STATUS/INFORMATION HOMEPAGE 19
D.4 ACCESS TO RESPONDERS UNDER THE INCIDENT COMMAND SYSTEM 20
D.5 FIELD-BASED SERVER APPLICATIONS 20
E. Reliability and Availability 21
E.1 REGIONAL DATA CENTER AND NETWORK OPERATIONS CENTER 21
E.2 ENHANCED PACKET CORE 21
E.3 TRANSPORT NETWORK 22
E.4 RADIO ACCESS NETWORK 22
E.5 MOBILE AND PORTABLE USER EQUIPMENT 23
F. Radio Frequency (RF) Engineering 23

F.1 RADIO ACCESS NETWORK PLANNING 23
F.1.1 RF PROPAGATION ANALYSIS *23*
F.1.2 NETWORK CAPACITY AND THROUGHPUT ANALYSIS *24*
F.1.3 SCALABILITY, EXPANDABILITY, AND COST EFFECTIVE DESIGN *24*
F.1.4 MODELING ASSUMPTIONS *24*
F.2 INTERFERENCE MITIGATION 25
F.2.1 NETWORK PLANNING FOR INTERFERENCE MITIGATION *25*
F.2.2 ENODEB INTERFERENCE MITIGATION FEATURES *26*

G. State of Texas PS LTE Testing 26

G.1 STRATEGIES FOR EFFECTIVE PS LTE TESTING 26
G.1.1 CONFORMANCE TESTING TO 3GPP STANDARDS *27*
G.1.2 MULTI-VENDOR INTEROPERABILITY TESTING (IOT) *27*
G.1.3 END-TO-END FUNCTIONAL VALIDATION TESTING *28*
G.1.4 SUMMARY OF TESTING COMMITMENTS *29*

H. Operations, Administration, Maintenance & Provisioning 30

H.1.1 NETWORK MANAGEMENT SYSTEM (NMS) *30*
H.1.2 OVER THE AIR (OTA) DEVICE MANAGEMENT *30*
H.1.3 SELF ORGANIZING NETWORK (SON) *30*
H.1.4 INTEGRATED BILLING *30*

Appendices 32

APPENDIX A DEFINITIONS AND ACRONYMS 32
APPENDIX B COMMITMENT TO COMPLIANCE SUMMARY 35
APPENDIX C LTE/EPC FUNCTIONS AND INTERFACES 39
C.1 LTE INTERFACES *41*
APPENDIX D LTE TEST TOOLS 43
APPENDIX E MTBF INFORMATION (CONFIDENTIAL) 44
APPENDIX F 3G ROAMING AND COVERAGE 45
F.1.1 EXPECTED DEVICE BEHAVIOR (CONFIDENTIAL) *46*
F.1.2 USER EXPERIENCE (CONFIDENTIAL) *46*
F.1.3 DEVICE FREQUENCY INFORMATION (CONFIDENTIAL) *46*
APPENDIX G EXPANSION MODULE PROCESS 47
APPENDIX H EXPANSION MODULE 1: BIG-NET DEPLOYMENT 48
H.1 BIG-NET DEPLOYMENT: HARRIS COUNTY BUILD-OUT *48*
H.2 HARRIS COUNTY BIG-NET: INITIAL PHASE COVERAGE *49*
H.2.1 COVERAGE COMMITMENT POLYGON A *50*
H.2.2 COVERAGE COMMITMENT POLYGON B *50*
H.2.3 ENODEB SITE LOCATIONS (CONFIDENTIAL) *50*
H.2.4 PORTABLE DOWNLINK COVERAGE MAP *51*
H.2.5 LIGHT LOAD COVERAGE CONTOUR *51*
H.2.6 SECTOR UTILIZATION INFORMATION (CONFIDENTIAL) *52*
H.3 KEY MILESTONE CHART *52*

Report Prepared By:
Texas Department of Public Safety
Homeland Security Division
Interoperable Communications Program Office
Contact: Mike Simpson—Chief, Inteoperable Communications and Statewide Communications Interoperability Coordinator (SWIC)
(512) 424-7427 mike.simpson@dps.texas.gov

A. Executive Summary

A.1 INTRODUCTION

This Texas Interoperability Showing ~~Technical and Operational Response~~ is ~~intended~~being submitted to demonstrate the technical and operational proficiency of the State of Texas (the "State") necessary to achieve operability and interoperability of public safety broadband networks in accordance with FCC Waiver Orders adopted on May 12, 2010, December 10, 2010, and January 25, 2011, docket number PS 06-229. This document ~~will also outline~~outlines, to the extent they are understood at this juncture, the strategies, methods and processes the State of Texas intends to implement in order to achieve a statewide Public Safety Interoperable Long Term Evolution (LTE) network. Such a network would be realized through a fair and competitive procurement environment created by Public Safety agencies desiring to build-out in Texas. Approved agencies would be granted authority by the State of Texas through the Texas Department of Public Safety to construct and operate LTE layers under the broadband waiver granted to Texas by the Federal Communications Commission on May 12, 2011, and by the FCC-approved spectrum lease to Texas by the Public Safety Spectrum Trust (PSST), which is the nationwide licensee for the public safety broadband frequencies of 763-768/793-798 MHz.

As the state which has historically led the nation in annual federally-declared disasters, Texas is dedicated and committed to statewide cooperation and a collaborative effort in building and operating public safety LTE infrastructure to provide the highest level of prevention, protection, response, and recovery from acts of terrorism and other catastrophic events in the State and nation[1]. The State of Texas also commits in this showing~~,~~ that it will ensure that early deployments within its borders will be consistent with current and future FCC orders relating to nationwide interoperability, serve as the state-level interface with the PSST and the FCC's Emergency Response Interoperability Center (ERIC), and facilitate coordinated equipment development and purchases throughout the State.[2]

The State of Texas will deploy a 700 MHz interoperable public safety wireless broadband network which complies with FCC orders, and it will implement the statewide network in phases, beginning with the BIG-Net[3] project as the first phase being ~~implemented~~deployed for the Houston metropolitan and coastal region. As such, implementation details of the BIG-Net project are included herein. Additional interoperability showings expansion modules, described in the appendices, that will be presented to the FCC in advance of construction of future infrastructure phases. The State of Texas will continue to promote a competitive multi-vendor environment for future phases of network implementation. The State of Texas will work closely with the Commission to ensure that compliance is maintained throughout each phase of the deployment and will submit interoperability showing updates and quarterly reports to the Commission. Indeed, the FCC acknowledged that "to the extent that Texas plans to deploy its network in phases, we expect that each phase would carry independent obligations to submit an interoperability showing under this Order".[4]

In summary, the State of Texas agrees and commits to remain subject to existing technical rules, the requirements of the *Texas Waiver Order* (11-863), the *Interoperability Order* (10-2342), the January 2011 *Third Report and Order, 4th NPRM* (11-6), the May 2010 *Waiver Order* (10-79) and any future rules

[1] See *Texas Waiver Order*, September 10, 2010, page 4.

[2] Ibid, page 5.

[3] BIG-Net is the network name for the Broadband Interoperability Gateway Network.

[4] See *Texas Waiver Order*, Requests for Waiver of Various Petitioners to Allow Establishment of 700 MHz Interoperable Public Safety Wireless Broadband Networks, DA 11-863, PS Docket 06-229, May 12, 2011, page 5, footnote 33.

which may be adopted in future proceedings.[5] A Commitment to Compliance summary is provided in Appendix F.

A.2 STATE OF TEXAS OBJECTIVES FOR PS LTE

In recognition of the dramatic and potentially transformational benefit that Public Safety (PS) LTE broadband services will bring to its public safety users, the State of Texas has made the deliberate decision to pursue early deployments of PS LTE in Texas. This leadership is evidenced by the Texas Petition for 700 MHz waiver, the granting of such waiver by the Commission, the timely execution of a spectrum lease with the PSST, the FCC's approval of that lease, and the willingness on the part of a leading Public Safety wireless provider ~~in the State~~, Harris County, to proceed with an early deployment once this interoperability showing receives Commission approval. In taking on the early deployment, the State understands this endeavor will result in additional risks, costs, and burdens on State resources and projects. Other public safety agencies within Texas have indicated an eagerness to get started. The State is acutely aware of the critical need to guide and direct them toward a viable, interoperable solution. As a committed partner in the vision toward a National Public Safety Broadband Network, the State of Texas is willing to take on some of the initial burdens in order to put the technology into the hands of Texas' first responders sooner, and help pave the way for similar deployments across the nation.

The State of Texas recently released[6] a clear set of high-level objectives associated with the early deployment of PS LTE. Those objectives have been refined further to read:

- To create an effective and interoperable 700 MHz Interoperable Mobile Public Safety Broadband Network, which, when fully deployed, will enable public safety users operating in Texas to be safer, more responsive, and more effective in the saving of lives and property.
- To enable early deployments of interoperable 700 MHz PS LTE network layers in Texas.
- To facilitate an open, standards-based 3rd Generation Partnership Project (3GPP) LTE environment which supports a healthy, competitive multi-vendor procurement environment for network infrastructure and terminal devices, while enabling LTE suppliers to innovate and produce sustainable products and services.
- To support the eventual deployment of a Nationwide Public Safety Broadband Network by working closely with agencies within Texas, other states and jurisdictions across the country, federal agency partners such as the Commission, Department of Commerce, Public Safety Communications Research program (PSCR), DHS-Office of Emergency Communications, and of course, the nationwide network governance entity (NNGE), if and when it is formed.
- To aggressively explore possibilities for Private/Public partnerships in order to leverage existing commercial capabilities and associated economies of scale.

A.3 MULTI-VENDOR SYSTEM ARCHITECTURE SUMMARY

The State of Texas is embarking upon a focused effort to determine an effective and manageable approach to incorporate multi-sourcing into the State of Texas PS LTE environment. The State will be

[5] *See Third Report and Order*, 11-6, PS Docket 06-229, 1/26/2011, ¶14. See also *Waiver Order,* Recommended Requirements,¶ A.
[6] Released in documents related to the Region VI Public Safety LTE Interoperability Forum.

gathering information from key industry players ~~regarding~~to determine which interoperability interfaces are most critical, where the risks are, and how these choices impact interoperability. Multi-source designs will be pursued at the Evolved Packet Core (EPC) core layer, and examined ~~regarding~~with respect to the Home Subscriber Server (HSS) and the eNodeB layers. Especially for LTE device certifications, the State plans to lean heavily on the carriers and the PCS Type Certification Review Board (PTCRB) process, also in development.[7]

The applications planned for the network are in their formative stages~~,~~ and will be further refined as the needs and requirements of the end users are examined. For the first phase of BIG-Net, the initial LTE system roll-out will support: internet access, authorized VPN access, status/information homepage, ICS access, and field base data and server applications.

As the network expands and evolves, the State is looking toward a full range of potential applications, including: streaming video, video transfer, silent dispatch by CAD/MDT, location services, SMS/MMS, federal database access, fingerprint identification, automatic license plate reader, intelligent transportation systems, medical telemetry and access to hazmat, building plans, and critical infrastructure information.

Implementing a network with the level of reliability and availability required by mission critical public safety networks requires a variety of approaches at all stages of network planning and maintenance. The State of Texas PS LTE network will provide high reliability and high availability components for all layers of the network: HSS, network operations center, EPC, WAN/transport, and the RAN/eNodeBs. The specifics of this design as it relates to the overarching multi-vendor architecture will be developed as part of the broader network design and requirements process.

All other aspects of the network design, including security services, authentication, encryption, RF design, RF coverage, and interference~~,~~ will be approached per the guidance and recommendations of the Commission, PSST, ERIC, National Public Safety Telecommunications Council (NPSTC), Department of Commerce-PSCR, and DHS-~~OEC~~Office of Emergency Communications, among others.

~~More technical details on these and other topics are provided in the sections below.~~

[7] *See Interoperability Order*, 10-2342, ¶18.

A.4 SUMMARY

In summary, it should be emphasized that the State is in an early stage of project planning. As directed by the original Waiver Order,[8] the State of Texas will submit quarterly reports to provide progress on the planning, funding, deployment and interoperability testing. The following sections provide more detail on the programs ~~we have~~the State has undertaken to begin the network design, demonstrations, trial network, and planning efforts.

The State remains acutely aware of the many unanswered issues and unforeseen obstacles which will need to be resolved and overcome by the early deployment entities. The State hopes that the Commission will continue to support a process which allows the waiver recipients to take the first steps of the journey, recognizing that the roadmaps, plans and challenges that will appear are not entirely understood at this early juncture, and that to proceed forward expeditiously is to the collective benefit of Public Safety.

The State would like to once again emphasize the deep commitment toward developing the strategies, programs, and processes needed to ensure that the State of Texas Public Safety LTE network is compliant with 3GPP LTE standards, that it is fully interoperable with a nationwide network, and that it be deployed and managed in a way that allows the State to sustain and evolve its interoperable capabilities.

B. Processes for Establishing and Sustaining Interoperability ~~for PS LTE~~

The most central questions posed by the request for an Interoperability Showing involve precisely how the State of Texas will develop the multiple processes needed to design, procure, implement, and sustain an interoperable network, all while maintaining the appropriate autonomy and specific needs of public safety partners and users. Especially during early deployment phases with the greatest uncertainty, the State will be working closely with all of its deployment partners to ensure they meet the requirements and policies set forth by the State and the Commission. Without such compliance, as the designated 700 MHz waiver recipient and PSST spectrum ~~lease holder~~leaseholder, the State would have the right to withhold approval to constituent jurisdictions to operate on the broadband frequencies of 763-768/793-798 MHz.

B.1 PRIORITIZING "OPERABILITY" OVER "INTEROPERABILITY"

As part of the discussion around establishing processes for establishing and sustaining interoperability, the State concurs with the policy of prioritizing *operability* over *interoperability*. As asserted the December 2010 *Interoperability Order*, "seamless interoperable communication is possible only across networks that are fully operable,"[9] and as stated in the National Emergency Communications Plan (NECP), "communications operability is a critical building block for interoperability; emergency response officials first must be able to establish communications within their own agency before they can interoperate with neighboring jurisdictions and other agencies."[10] The State believes that a successful strategy will support a "slow-growth" approach, allowing portions of the network to be built-out in a

[8] *See Waiver Order*, Requests for Waiver of Various Petitioners to Allow Establishment of 700 MHz Interoperable Public Safety Wireless Broadband Networks, May 12, 2010, PS Docket 06-229, ¶64.

[9] See *Interoperability Order*, DA 10-2342, December 2010, ¶8.

[10] *See National Emergency Communications Plan*, Department of Homeland Security, August 2008, *Message from the Secretary*, page 1.

manner which delivers immediate operational benefits to local users while efforts proceed in earnest toward a fully interconnected, nationwide, interoperable PS LTE network.

~~B.1~~B.2 INTRA-STATE PROCESSES

Thus far, the State of Texas has identified the following process development initiatives for establishing and sustaining interoperability among agencies within the State ("intra-state"). Associated milestones are shown in the State of Texas Milestone chart in Appendix B.

Individual Jurisdiction Application to Texas Department of Public Safety (TxDPS) to Host a Public Safety LTE Broadband Layer in a Given Geographic Area of Texas – A jurisdiction ("Applicant") wishing to host a public safety LTE broadband layer in a given geographic area of Texas shall make application to TxDPS. The Applicant shall, at a minimum, provide: 1) A summary of major elements of the applicant's LTE broadband plan, identification of the proposed geographic area to be covered, and an explanation of how all eligible entities within the proposed LTE broadband geographic footprint were given an opportunity to participate in the planning process and to have their positions heard and considered fairly, and whether such entities endorse the application to TxDPS; 2) Records of open meetings held by Applicant with eligible entities, including dates, times, and locations of meetings, meeting agendas, meeting notes, names of individuals invited and individuals in attendance, individual titles, agency names, agency addresses, phone numbers, and individual email addresses (TxDPS may elect to conduct additional open public meetings for discussion of Applicant's proposal); 3) Details of significant available funding for proposed initial infrastructure deployment, and details of expected future funding for additional infrastructure layers; 4) Details of funding plan for sustainment costs, and any proposed user fees to subscribers; and 5) Applicant's system design and construction plan with timeline, schedule, and milestones. The State intends to have its complete intra-state application process finalized and published no later than ~~December~~February 1, 201~~1~~2.

Before approving any intra-state jurisdiction applications to operate under the *Texas Waiver Order*,[11] the State of Texas will first obtain Commission sign-off on any new proposed additions to the State network by way of updated *Texas Interoperability Showings.*

TxDPS will work in close coordination and constant consultation with the Harris County BIG-Net leadership and management team~~,~~ in the development of the detailed processes, and in the implementation of connectivity and roaming programs.

- Texas DPS has notified representatives of the 24 Texas Councils of Governments, and the major metropolitan areas, concerning the FCC broadband waiver to Texas and what it means. Broadband presentations were made by TxDPS at the annual Texas Homeland Security Conference in April ~~,~~ 2011, ~~and to~~at two FEMA Region VI Regional Emergency Communications Coordination Working Group meetings, an annual Texas Association of Regional Councils Conference, a statewide Association of Public Safety Communications Officials (APCO) meeting, and an upcoming Texas Department of State Health Services EMS conference. Additional outreach regarding the above-mentioned application process will be made to Texas public safety jurisdictions at future conferences and ~~meetings~~gatherings across the state, and through regular electronic message updates.
- **Participation in the PSCR Demonstration Network** – Any manufacturer wishing to sell infrastructure equipment to the State of Texas (or a local Texas jurisdiction) to become a

[11] See *Texas Waiver Order*, Requests for Waiver of Various Petitioners to Allow Establishment of 700 MHz Interoperable Public Safety Wireless Broadband Networks, DA 11-863, PS Docket 06-229, May 12, 2011, page 5, footnote 33.

part of the Texas PS LTE network must have sufficient proof or certification that the manufacturer is "participating" in the PSCR demonstration network program.

- **State of Texas PS LTE Architectural Requirements & Guidelines Process** – The State of Texas will develop design guidelines by December 1, 2011 for public safety entities wishing to consider procurement of a Public Safety LTE infrastructure layer.
- **Conformance, IOT, and End-to-End Validation Plan** – As described in the Testing section below, the State will support all aspects of conformance and IOT on all operational devices as required ensuring compliance with applicable standards. The State will also perform End-to-End Validation testing. No device model will be allowed on the network without passing the required tests~~,~~ performed by an authorized or accredited entity.
- **Interoperability Monitoring, Issue Tracking, and Escalation Service Plan** – Once the systems are deployed, the State will establish, within a consolidated customer service center, the ability to handle complaints or problems experienced by users accessing the Texas PS LTE network. This special "help desk" program will ensure that these issues are properly diagnosed and resolved. A process of escalation to upper management of the Texas Department of Public Safety will also be set forth.
- **Special-Handling for the City of San Antonio** – The State is in direct discussions with the City of San Antonio, the only other FCC broadband waiver recipient~~s~~ within the State, as to how a potential future City of San Antonio LTE layer would integrate into the LTE infrastructure to be constructed under the Texas waiver authority. Such an arrangement would be consummated with an "inter-government agreement." These discussions are slow-moving at present, as the City of San Antonio has not yet identified sufficient funding for build-out.

~~B.2~~B.3 INTER-STATE PROCESSES

This section outlines a high-level process for how to establish and sustain interoperability with entities which are outside Texas and therefore require an inter-state process.

The State of Texas realizes that the facilitation of effective inter-state interoperability processes demands a full commitment to interoperability by the State of Texas. As described in this document, the State of Texas remains fully committed to complying with interoperability requirements expected, so that the State not only stays symmetrical with other interoperating entities, but also continues to support the nationwide goals and objectives.

- **Requirements on Other FCC 700 MHz Broadband ~~Waiverees~~Waiver Recipients to Connect to the Texas PS LTE Network** – Out-of-state FCC 700 MHz public safety broadband waiverees wishing to connect to the Texas PS LTE network shall make a request to TxDPS, in which the requester shall include, at a minimum, documentation proving that requester: 1) Has been granted an FCC 700 MHz public safety broadband waiver for a specific geographic area; 2) Has a valid spectrum lease with the PSST, which has been approved by the FCC; 3) Provides technical information necessary to support Home Routing and Local Breakout access and 4) Agrees to conform with all current and future FCC orders pertaining to 700 MHz public safety broadband interoperability. The State will directly inform current and future FCC broadband ~~waiverees~~waiver recipients on how to make a request to the State of Texas through TxDPS, and provide regular feedback as to the status and progress of their request. TxDPS will work in close coordination and constant consultation with the regional core owner, Harris County ~~BIG~~

~~Net leadership and management team~~, for both the development of the detailed processes as well as the implementation of any connectivity and roaming programs.

~~It shall be emphasized~~The State of Texas emphasizes that while specific information is required to support interoperability from an external entity, per the *Waiver Order* and ERIC guidance, the State ~~of Texas~~ agrees and commits to honoring roaming and access requests from any qualified entity.[12] Additionally, the State agrees to refer the matter to the Bureau if an agreement with the outside entity cannot be reached within ninety days.

C. System Architecture Overview

The State commits to a uniform deployment of at least 3GPP standard Evolved Universal (or UMTS) Terrestrial Radio Access (E-UTRA) Release 8 and associated EPC~~,~~ prior to the date of service availability.[13] Additionally, the State commits to deploying LTE such that backward compatibility ~~between~~among all subsequent releases from Release 8 and onwards is ensured.[14]

The Broadband Public Safety implementation is based on the 3GPP LTE standards~~,~~ and consists of the Radio Access Network (RAN), the EPC, the LTE devices, and the key interfaces exposed by these components. The implementation includes the ability to roam ~~between~~among systems, to provide priority access and quality of service (QoS) to ensure that the most critical public safety users receive the highest priority, and to ensure the Broadband Public Safety implementation is secure.

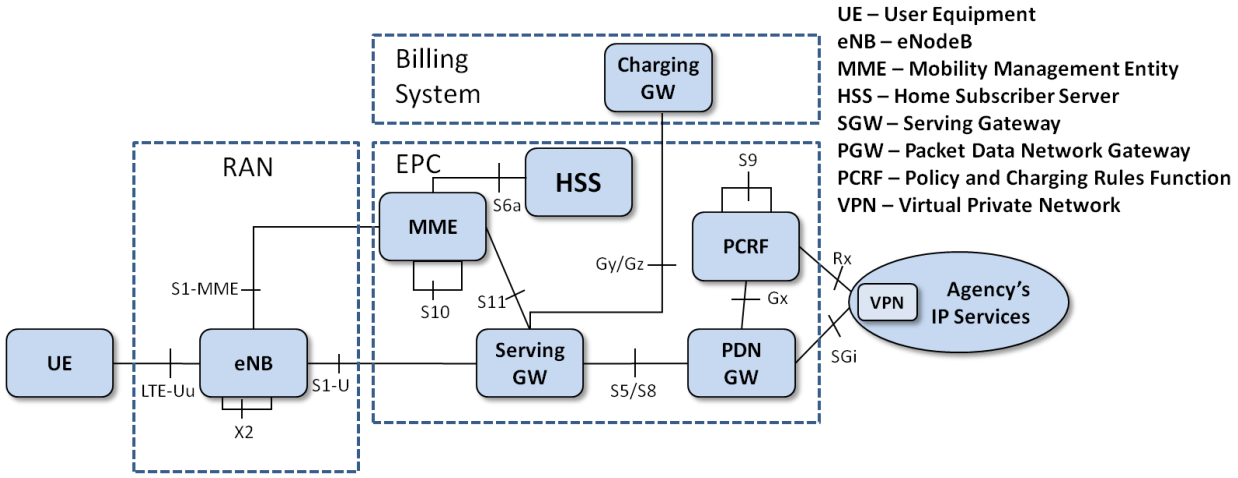

Figure 1 - Logical Architecture

The LTE RAN and EPC architecture and interfaces are shown in Figure 1 and described in the following sections. A more detailed description of the LTE/EPC infrastructure elements and interfaces is contained in Appendix C.

C.1 RADIO ACCESS NETWORK (RAN) ARCHITECTURE

The eNodeB (eNB) is the only 3GPP defined network element within the EUTRAN. The eNB provides the user plane and control plane protocol terminations toward the User Equipment (UE). The eNB consists of the inter-working function between the backhaul interface and the base band interface, the base band processing elements for the air interface, and the radios. The eNB in this system is compliant with

[12] *See Interoperability Order*, 10-2342, PS Docket 06-229, Recommended Requirements, Public Safety Roaming on Petitioners' Networks, ¶A.
[13] *See Third Report and Order*, 11-6, PS Docket 06-229, ¶10.
[14] *Ibid*,¶11.

the 3GPP Release 8 and Release 9 standards. The eNB is designed for compatibility with 3GPP compliant UE's and utilizes 3GPP compliant network interfaces.

Functions supported by an eNB are defined mainly in 3GPP Technical Specification (TS) 36.300. The RAN implementation for this system will be compliant with, at a minimum: 36.104, 36.211, 36.212, 36.213, 36.214, 36.300, 36.321, 36.322, 36.323, 36.331, 36.413, 36.423 and other referenced specifications. Compliance of devices and the RAN continues to evolve from 3GPP Release 8 specification versions and beyond. The eNB is designed to support upgrade to support modifications of the air-interface and network interfaces in accordance with evolution of the LTE standards.

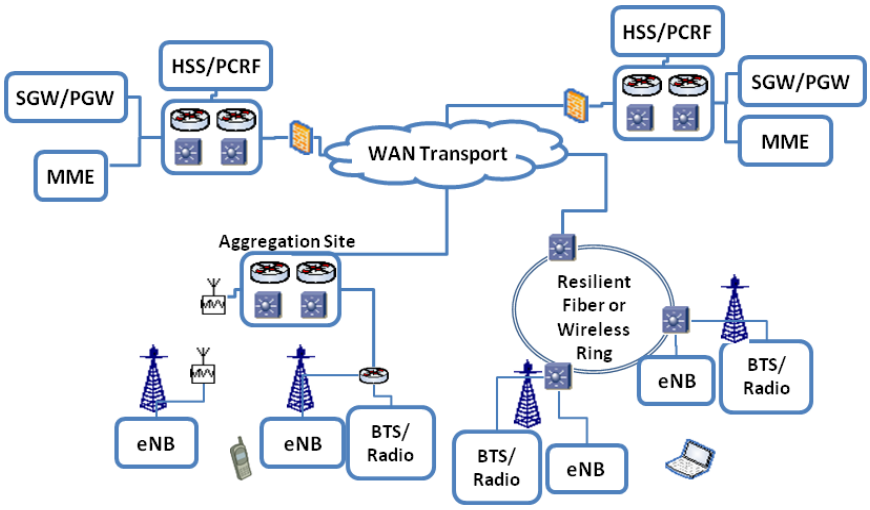

Figure 2 – RAN Physical Architecture

The RAN implementation is based on IP transport. The implementation supports collocation with existing narrowband or commercial sites and supports various types of backhaul transport mediums. The equipment supports the logical User Plane, Control Plane, and Operations, Administration, Maintenance, and Provisioning (OAM&P) interfaces on the same physical interfaces and it supports Virtual Local Area Network (VLAN) separation. The eNB hardware supports 5+5 MHz PSST band ~~or~~, 10+10 MHz D/PSST band, or both D and PSST 5MHz bands simultaneously. The eNB is built with Self Organizing Network (SON) functions to automate deployment and optimization functions. The implementation will support both GPS and IEEE 1588v2 timing solutions as needed.

C.2 CORE NETWORK ARCHITECTURE

The core network is based on the 3GPP R8 defined EPC as mainly defined in 3GPP TS 23.401. The solution will support the MME, SGW, PGW, HSS, and PCRF functions using standards-defined network interfaces. A VPN element is also shown. This element supports a secure public safety VPN and can be used with alternate access technologies (e.g., WiFi and 3G).

The EPC implementation is based on the (Generic Tunneling Protocol) GTP-based S5 and S8 interfaces. The EPC implementation is compliant with specifications 23.203, 23.401, 23.402, 24.301, 29.212. 29.214, 29.272, 29.274, 32.240, 32.251, 32.295, and other referenced specifications. Compliance of devices and infrastructure continues to evolve from 3GPP Release 8 specification versions and beyond.

Additional interfaces supporting charging are supported. The PGW and SGW can support both online (Gy) and offline (Gz) charging interfaces.

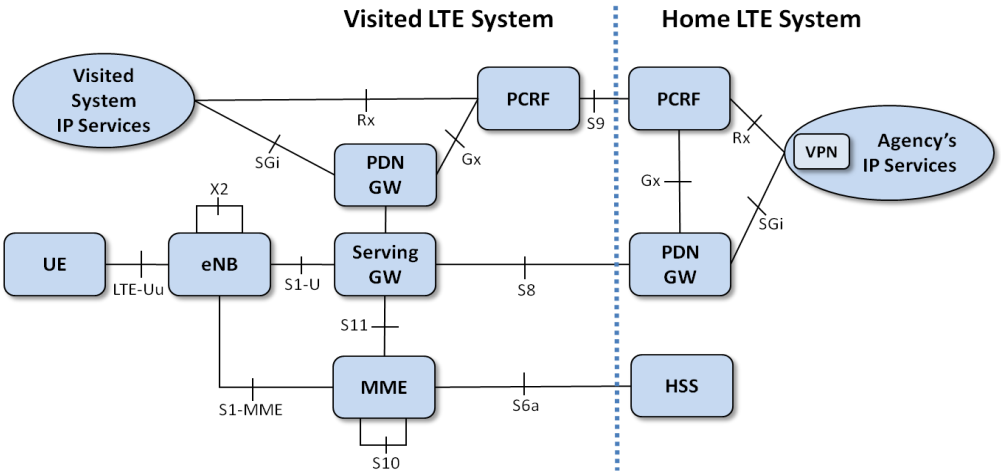

Figure 3 – EPC Roaming Architecture

The system is capable of supporting roaming with other regional PS LTE systems and with commercial LTE systems (if supported by the device capabilities).

The EPC physical architecture is shown in Figure 4. The EPC solution is based on IP transport and pooling of network elements. The EPC has been centrally located to help facilitate statewide deployment and minimize the ~~risk~~consequences of natural disasters. To minimize backhaul traffic an additional SGW/PGW has been deployed in the Harris County region for localized connection to the RAN. The solution supports IPv4 and IPv6 UE~~'~~s and additional IPv6 network interfaces as a future software upgrade. Redundancy is supported at several levels including geographically distributed elements to mitigate disaster scenarios. The HSS and its associated subscriber database will be duplicated across geographic locations. The primary Network Operations Center functions (NOC) for the LTE System will be located in an existing Harris County facility. The redundant NOC will be located in the City of Austin in an existing Department of Public Safety facility.

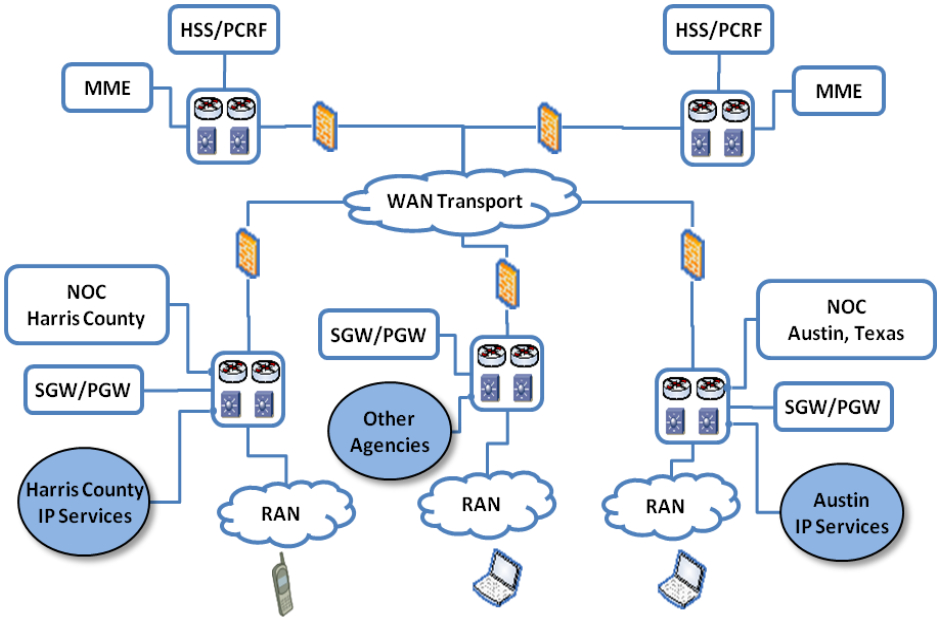

Figure 4 – EPC Physical Architecture

C.3 INTERFACES

Prior to the Date of Service Availability, the State of Texas agrees to support the following interfaces as defined by the 3GPP Standard.[15]

Uu – LTE over the air interface

S1-MME – eNb and the MME

S1-u – eNb and the SGW

S5 – SGW and PGW

S6a – Visited MME and the Home HSS

S8 – Visited SGW and Home PGW

S9 – Visited PCRF and Home PCRF

S10 – MME to MME for Category 1 Handover

S11 – MME and SGW

SGi – PGW and external PDN

X2 – eNodeB to eNodeB

Gx – PGW and PCRF

Rx – PCRF and AF located in PDN

Gy/Gz – online/offline charging interfaces

These interfaces support interoperability of the LTE network with 3GPP R8 December 2009 freeze or R9 September 2010 freeze compliance. These standards apply to UE devices, as well as interoperability with other PS regional LTE networks. Details on handoff and mobility inter-operability are addressed in Section C.4 including mobility across regional PS LTE networks. Details on supporting a VPN service are also covered in Section C.4.

C.4 MOBILITY AND HANDOVER

The State of Texas commits to supporting mobility and handover, such that users have a smooth and seamless transition between eNode sites wherever possible. The handover functionality can be supported using one of the many options available in the LTE architecture.[16] These functions will be supported via 3GPP standardized interfaces. In addition, careful planning, configuration, optimization, and maintenance will be managed to achieve optimum handover performance. The mobility implementation accommodates both active and idle mode handovers within LTE networks. These aspects are discussed in more detail in the following paragraphs.

C.4.1 3GPP Compliant Handover

The mobility implementation is fully compliant with 3GPP standards. It supports high-speed mobility and seamless handoffs between eNBs within the Broadband Network. Radio frequency phase shift acquisition up to 300 Hz Doppler can be supported, which accommodates handoffs above 75 mph in a properly -engineered and maintained network.

[15] *See Third Report and Order*, 11-6, PS Docket 06-229, ¶12.

[16] *See 4th NPRM*, 11-6, PS Docket 06-229, ¶¶47-8.

C.4.2 Adjacent Network Handover

The mobility implementation can support inter-network handover between regional public safety networks.

If ~~all networks are allocated~~ a ~~common or~~ single ~~Private~~Public Land Mobile Network Identifier (PLMN ID~~),~~) is used for then nationwide PS LTE network, then issues associated with inter-PLMN handover are avoided. However, ~~in this case there must be~~a single PLMN ID configuration will requre a nationwide network planning, operations, and maintenance authority. The authority would be required to coordinate ~~cell identifiers, eNB neighbor lists, network interconnections, and handover configurations~~network identifiers across the regional administrative domains.

If the regional networks are allocated different PLMN ID~~'~~s (see Section ~~C.5~~C.5) then inter-PLMN handover capabilities will be required as regional networks expand and become adjacent. ~~In this case, nationwide network planning, operations, and maintenance are avoided. Instead, network planning and coordination is limited to RF planning along geographic borders between regions. The network interconnections are minimized and can leverage industry standard roaming interfaces.~~

The State of Texas is working with the public safety and vendor communities to deploy an interoperable implementation supporting adjacent network handover.

C.4.3 Mobile VPN

In addition to handover, the implementation also supports Mobile VPN (MVPN). MVPN implementations provide application-level session continuity across disparate radio access networks, as well as security between the UE and the agency application domain. Session continuity is supported at the application IP layer, which is above the radio access layer. Thus, the MVPN implementations can provide session continuity across various radio access technologies, such as LTE, 3G packet data, and Enterprise WiFi. Each radio access technology comprises an independent link between the MVPN server and the MVPN client in the UE. As such, each radio link is independently monitored and the optimum radio link is selected to support the application sessions. If a radio link becomes disconnected or impaired, the MVPN can switch to an alternate available radio link. Thus, the MVPN can provide IP layer mobility and intelligent route selection which is independent of handover in the radio access layer. The MVPN can provide a solution for mobility across disparate radio access networks.

In addition to providing IP layer mobility, the MVPN can provide secured connections between the server and client. The secured connection provides authentication, confidentiality, and integrity protection. Cryptographic modules which support the MVPN are compliant with FIPS 140-2 standards. The use of MVPN technologies with these security capabilities is critical~~, since~~ because the current Criminal Justice Information Services (CJIS) security policy requires the use of highly secure VPNs for mobile device access.

C.5 ROAMING

Roaming is the ability for a user to obtain service in a visited network. Roaming will be supported with other regional networks across the nationwide Shared Wireless Broadband Network (SWBN). These requirements are supported by leveraging 3GPP standardized interfaces, as well as the adoption of ~~a~~ roaming services tailored to the SWBN.

C.5.1 PLMN ID Assignment

The NPSTC Broadband Task Force report[17] recommends that the number of PLMN ID~~'~~s allocated for the SWBN should be less than 100~~ ID's~~, and may be as few as one~~ ID~~. The implementation will support this recommendation, and can be adjusted to accommodate the PLMN ID allocation for the SWBN.

The State of Texas hereby commits that the implementations of the PLMN ID for the State of Texas can be and will be adjusted as necessary to accommodate the nationwide PLMN ID plan currently in development. As directed by the *Interoperability Order,* the State ~~will submit~~has submitted notice to the FCC of the need for a PLMN ID at least 90 days prior to the planned date of service availability.[18]

C.5.2 Intra-system Roaming

Intra-system roaming occurs when users obtain service from a visited regional network within the SWBN which is not the user's home network. The implementation will support intra-system roaming.

C.5.3 Inter-system Roaming

Inter-system roaming occurs when users obtain service from a commercial carrier network, which is not part of the SWBN. The implementation will support inter-system roaming as enabled by roaming agreements with one or more commercial carriers.

Commercial carriers typically leverage roaming service providers to provide inter-network connectivity, security, and billing functions. Roaming standards, such as IPX, are evolving to support QoS-enabled IP transport services, and therefore should support the services required for roaming with commercial carriers. However, inter-system roaming may have unique requirements~~ as~~ compared to commercial carrier roaming services, such as the support for a number of regional network entities comprising the SWBN. Therefore, it may be beneficial to establish an SWBN roaming service to minimally support intra-system roaming. In order to support inter-system roaming, the SWBN roaming service could then interface to commercial roaming service providers.

C.5.4 Roaming Interoperability

UE~~'~~s conforming to 3GPP standards will be able to roam across regionally deployed networks. However, it is essential for the UE~~'~~s to be configured with appropriate frequency bands, PLMN lists, and access parameters corresponding to associated roaming agreements. 3GPP compliant UE~~'~~s will minimally support the following roaming-related behaviors:

- Scan supported/configured bands;
- Perform network and cell selection; and
- Authenticate on a visited network.

After authentication on a visited network, an IP address is assigned, and the UE then has the ability to access IP services. If a home-routed session is initiated, then the home network assigns an associated IP address to the UE. If a local breakout session is initiated, then the visited network assigns an associated IP address to the UE.

[17] *See NPSTC Broadband Task Force* Report, September 2009, Section 6.3.1.

[18] *See Interoperability Order*, 10-2342, ¶16 and Appendix A, ¶C

C.5.5 Roaming Configurations

The State of Texas commits to supporting home-routed traffic, such that a "visiting" user's traffic is routed back to the home network to enable the use of ~~visitors'~~the visitor's home resources.[19]

Home-routed configuration is when a user's traffic is routed back to the home network to enable the use of home applications and Internet access. The home-routed case can support the majority of Public Safety applications and use cases. Home-routed bearer flows benefit from QoS policies controlled in the home network. In addition, home-routed provides many operational and security benefits, such as:

- Single point of authentication for applications;
- Single point for firewall, intrusion detection/prevention, and anti-virus protection; and
- Activity logging and Internet access policy control.

The State of Texas commits to supporting local breakout traffic, such that a "visiting" user is able to utilize the resources of the State of Texas PS LTE network.[20] Local breakout configuration is when a user's traffic is routed within the visited network, and therefore is not routed back to the user's home network. Local breakout provides for optimization of bearer routing and access to visited network services. It should be noted that roamers may be subject to QoS policies of the local (i.e~~.~~., visited) network.

C.6 PRIORITY ACCESS AND QOS

LTE offers the most advanced QoS capabilities of any commercial cellular technology; however the technology must be properly configured for optimal public safety implementation. The State of Texas is working with the public safety and vendor communities to contribute to the development of interoperable priority access and QoS requirements. The implementation will be compliant with 3GPP TS 23.203. All of the (QoS Class Identifier) QCI (1-9) and (Allocation and Retention Parameters) ARP (1-15) values defined in this specification will be supported in the deployed equipment. In addition, all of the Access Class (0-15) values as defined in TS 22.011 will be supported.

A flexible priority access and QoS framework is provided by the implementation. Principles of the framework are as follows:

- **Regional Flexibility** ~~-~~— Each public safety region has the flexibility to choose an LTE prioritization model to suit its needs. For example, region 1 may prioritize responders based on role, and region 2 may prioritize responders based on application. The region should have some latitude to choose how to prioritize devices and applications on the regional system.
- **Roaming Support** ~~-~~— Whether roaming ~~between~~among regional systems or roaming to a commercial LTE system, the prioritization framework can support a consistent and fair policy of mapping priority between systems.

The realization of this framework includes adoption of LTE configuration parameters for public safety use, such as ARP, QCI, GBR (Guaranteed Bit Rate), and MBR (Maximum Bit Rate~~),~~). Framework adoption must be consistent across all 700 MHz public safety LTE systems in order to achieve meaningful interoperability. Deployments in the State of Texas will be adjusted to comply with and adapt ~~with~~to the eventual nationwide framework for Priority Access and QoS~~, once~~ when it is established.

[19] *See Interop Order,* ¶10 and Appendix A, ¶A

[20] *Ibid*, ¶9 and Appendix A, ¶A

C.7 SECURITY

Security is a critical aspect of the public safety broadband network implementation. Therefore, the State of Texas commits to supporting the optional security features specified in 3GPP TS 33.401, which include integrity protection, verification of data, and ciphering and deciphering of data. The State also commits to supporting network layer VPNs.[21] ~~This section describes~~The following sections describe the comprehensive and interoperable security implementation in the State of Texas network.

C.8 OVERALL SECURITY ARCHITECTURE

3GPP standards have defined a suite of security related specifications for LTE systems. The 33 series of 3GPP specifications contains several documents defining various aspects of LTE and broadband application security architectures. From an interoperability perspective, of particular interest are the specifications 33.401 ("3GPP System Architecture Evolution (SAE); Security architecture"), 33.210 ("3G security; Network Domain Security (NDS); IP network layer security"), and 33.310 ("Network Domain Security/Authentication Framework (NDS/AF"). The implementation will fully support the requirements stated in these specifications to ensure secure inter-system interoperability.

The implementation will support both the mandatory and optional aspects of the 3GPP SAE security architecture specification, as defined in 33.401.The optional aspects align with recommendations given by the NPSTC Broadband Task Force. Specifically:

- Both control plane and bearer plane traffic will be encrypted over-the-air. This includes Radio Resource Control (RRC) signaling, Non Access Stratum (NAS) signaling, and user plane traffic.
- Both SNOW 3G and AES encryption algorithms will be supported. AES will be the default choice in the implementation, ~~since~~as it is a NIST/FIPS recommended algorithm for securing public safety communications.

The implementation will utilize secure operations and management protocols and methods to distribute software and configuration information to the network elements.

C.9 NETWORK DOMAIN SECURITY

The implementation will utilize the 3GPP defined mechanisms for Network Domain Security, as defined in the 3GPP spec 33.210, "*Network Domain Security, IP Network Layer Security*". Per 33.210, the interfaces between the network entities in the network are to be secured using IPsec security associations. The security associations will be established and maintained using either IKE (Internet Key Exchange) v1 or IKEv2. Per 33.210, the Za interface is used to interface between two security domains and the Zb interface is used to interface between the various network entities within a single security domain. Specifically:

- NDS/IP inter-domain interface (Za) cryptographic protection via Security Gateways (SEGs) will be provided. The Za interface security associations will be established using IKEv1 or IKEv2. The X.509 digital certificate based authentication will be utilized ~~between~~among SEGs in different security domains.
- NDS/IP intra-domain interfaces (Zb) as specified in 33.210 will be cryptographically protected unless within physically secure and/or fully trusted environments.

[21] *See Interoperability Order*, 10-2342, ¶25 and Appendix A, ¶J. See also *Waiver Order*, ¶47.

C.10 MVPN ACCESS TO HOME

The Waiver Order requires that petitioners' systems allow the use of network layer VPN access to any authorized site and to home networks on the deployed network. This requirement is designed to ensure the ability of first responders to securely connect back to their home systems when attaching to foreign wireless networks. Without this requirement, there is the risk that some deployments may have their wireless networks configured to discard any traffic that is encrypted and destined to an external domain. This would be very problematic, as there are security compliance policies by CJIS, and NCIC (National Crime Information Center) that require the use of VPNs for remote user access.

CJIS (Criminal Justice Information System) requirements mandate the use of FIPS 140-2 validated encryption. Thus, any user of a deployment utilizing a broadband waiver must use FIPS 140 validated implementations to be compliant with CJIS security policy and to access CJIS related services. The implementation will use FIPS 140-2 compliant VPN solutions for remote user access.

C.11 DEVICES

Delivery of user devices for Public Safety broadband agencies will be driven by the availability of LTE chipsets supporting standard 3GPP baseband protocols and RF operation in the 10 MHz of Public Safety spectrum (763 MHz to 768 MHz lower and 793MHz to 798 MHz upper). All devices will adhere to the 3GPP Release 8 or later air interface specification and the recommended out of band emissions (OOBE) as specified in the *Waiver Order,* as well as existing OOBE requirements, to protect Public Safety narrowband voice services in the 700MHz spectrum.[22] In addition, all devices deployed after the system achieves service availability will be FCC Type approved. Frequency bands planned for the deployed devices are discussed in ~~Appendix H.~~Section F. The following are examples of user devices intended for deployment in the State of Texas Public Safety LTE network~~:~~.

C.11.1 USB-Modem

Initial trial and early deployment networks will be supported by a USB-modem device suitable for external connection to a host personal computer. A broad range of Public Safety legacy IP data applications, including Internet, Mobile VPN, CAD, mobile office, text messaging, location, lookups, and records will be supported, as well as uplink and downlink streaming video. The form factor of this device will follow commercial industry norms and be conducive to nomadic PC use, both in and out of the vehicle.

C.11.2 Vehicle Modem

The vehicle modem is an essential component for vehicle-based first responders and law enforcement officers in either urban/suburban or rural environments. The vehicle modem, equipped with a set of external high gain omni-directional MIMO antennas, offers improved link budget and throughput performance compared to embedded PC or USB solutions, and it is key to extending per site coverage range, particularly in rural environments.

The vehicle modem will be suitably rugged for cab or trunk vehicle mounting and support Ethernet-based wired computers and peripherals. A broad range of Public Safety legacy IP data applications including Internet, Mobile VPN, CAD, mobile office, text messaging, location, lookups, and records will be supported, as well as uplink and downlink streaming video from the vehicle.

[22] *See Waiver Order*, 10-79, ¶¶43-4.

C.11.3 Smartphone

A handheld device that serves as both a data and phone device is important to Public Safety LTE operations, particularly in urban/suburban environments where on-street or in-building portable coverage is provided.

D. Applications

The FCC Waiver Order has identified a list of minimum applications that waiver networks must support. These applications provide the foundation for meaningful nationwide interoperability. Consistent with the *NPSTC Broadband Task Force* report, and to support a common set of applications for the nationwide network, the State of Texas commits to deploying, at a minimum, the following applications and services on the PS LTE network: authorized VPN access, Status Information Homepage, access to users under ICS, and field-based server applications.[23]This section will explain how the State of Texas network will support these applications.

D.1 INTERNET ACCESS

Initially, internet access will be hosted in Harris County. The implementation will support two methods to access the Internet: (1) by the responder's home system (i.e. home-routed traffic) and (2) by the roamed-to (visited) system (i.e. local breakout). The UE selects an access point name (APN) identifier associated with the Internet Access host network and the MME determines whether the APN is for home-routed or local breakout traffic. This is accomplished ~~by~~ either by configuring a default APN in the subscriber's HSS record or by requiring the Harris County APN to be programmed into the devices.

D.2 VPN ACCESS TO ANY AUTHORIZED SITE AND TO HOME NETWORKS

A secure VPN or MVPN may be implemented to support the confidentiality and integrity of the responder's UE traffic. A corresponding device client may be necessary. A dedicated (M)VPN server may be deployed in an authorized site or in an agency home network, as the regional system dictates. An essential component of providing VPN access to any authorized site and/or to a home network is a network routing configuration which can support security, QoS, and network resiliency requirements. The State of Texas implementation will include support for each of these aspects via NetMotion Wireless (www.netmotionwireless.com) mobility products, with other qualified vendors being added as the program proceeds.

D.3 STATUS/INFORMATION HOMEPAGE

The State of Texas network will provide the necessary functions to support the Status/Information Homepage (SIH) application. The SIH is envisioned to provide home and roaming responders with incident-specific information, alerts, system status, weather, traffic, and other information. This information may come from Computer-Aided Dispatch (CAD) terminals, responders, or in the future, the Next Generation 911 (NG911 ~~ESInet~~) systems.

The SIH builds upon the two previous (D.1, D.2) features. Access to the local SIH will be provided by way of Internet Access from the home system. All home and visiting users will obtain access to the SIH via the Internet access server. A well-known URL (e.g., http://status.local.gov) will map to the Harris County SIH server.

[23] *See Waiver Order*, 10-79, PS Docket 06-229, ¶46.

In the future, the SIH may contain sensitive information and be accessed by many different responders (and roaming responders). Therefore, authorizations may be necessary to access certain SIH content. Because it is impractical for every SIH to contain subscription and authorization information for every public safety device in the U.S., a nationwide method will ~~be~~ eventually be needed to provide federated identity management to a SIH server in a visited system. This capability can be layered onto the basic SIH access capability.

D.4 ACCESS TO RESPONDERS UNDER THE INCIDENT COMMAND SYSTEM

The National Incident Command System (NIMS) has defined an Incident Command System (ICS) to help quickly coordinate and organize mutual aid situations for typically large incidents. ICS offers many benefits including a command and control structure, common vocabulary, staging, incident action plan, and integrated communications.

Application servers used for Mutual Aid may be deployed in a variety of ways:

- by the region requesting mutual aid assistance;
- by a hosting entity;
- on the Internet; or
- by an on-scene command vehicle (see section D.5~~)~~).

Regardless of deployment, applications used for ICS access (such as an ICS server or mutual aid communications service) must be accessible by both home and roaming UE~~'~~s in the public safety region where the incident is taking place. It may also be necessary for responders outside the incident region to access the Mutual Aid application(s). This requires the public safety operators to support IP connectivity for each of these different application deployments and home/roaming devices. IP networking tools that can be deployed to support this application include static IP address assignments, DNS, IPv4-v6 translation and NAT/NAP subsystems.

The State of Texas network will provide the necessary functions to support the IP connectivity to application servers required to support the ICS application.

D.5 FIELD-BASED SERVER APPLICATIONS

Public safety agencies regularly use Mobile Command Vehicles to support specialized incidents, such as hurricanes. Typically, these vehicles use cellular technology as the last mile link for an application server co-resident in the command van. Similarly, the LTE air interface will serve as last mile for field-based application servers. These application servers must be accessible by:

- Responders homed to the same public safety region as deploying the application;
- Roamers in the same public safety region as deploying the application;
- Responders homed in other public safety regions or carriers; and
- Internet users with authorization.

In order to achieve this, HSS will be configured to allocate a static IP address to UE~~'~~s serving as the modems for field-based servers. In order to be Internet-visible, this static IP address will use NAT/NAPT technology in the near term. Longer term, IPv6 technology may be used.

The State of Texas network will provide the necessary IP address allocation technologies to support the field-based server application.

E. Reliability and Availability

The implementation provides for high reliability and high availability for the following network components:

- Data Center and NOC;
- LTE Enhanced Packet Core (EPC~~)~~);
- Transport network;
- Radio Access Network (RAN~~)~~); and
- Mobile and portable User Equipment (UE).

In addition, the implementation also includes support for a MVPN which enables use of diverse access technologies, such as WLAN and commercial carrier 3G networks. Please refer to section C.4.3 for additional information on the MVPN. If a network becomes congested or goes down, the MVPN provides an additional level of disaster resilience by ~~virtue of access to those networks, in that if a network becomes congested or goes down,~~ enabling Public Safety users ~~will be able~~with the ability to obtain service on alternate, surviving networks.

The MTBF information is provided in ~~Appendix I.~~Appendix E.[24]

E.1 REGIONAL DATA CENTER AND NETWORK OPERATIONS CENTER

In order to maintain service availability, the network has been designed with multiple layers of redundancy and resiliency. The network can be deployed such that module failures, node failures, and even failure of an entire data center site, will not degrade network service availability. The Regional Data Center and NOC can be deployed in a fully-redundant configuration, such that a catastrophic failure of a data center location will not result in the loss of critical functionality, ~~since~~as all operations and traffic can be served by an alternate data center.

Network elements are modular and fault tolerant, providing advanced high availability features. The high availability elements contain internally redundant components which include:

- Redundant data path switch fabrics;
- Redundant control path switch fabrics;
- Multiple power supplies using separate power feeds and buses;
- Redundant network processing modules; and
- Redundant application processor modules.

Server redundancy is supported. In the event of a server failure, redundant server nodes are invoked. High availability network elements include load balancing for application processing modules. In the event of a failure of a module, traffic will be distributed over the remaining active modules. Modules are hot swappable, with repair and replacement taking place without disruption of normal operations. The re-initiation of the configuration and software takes place upon replacement of the module prior to being placed into service.

E.2 ENHANCED PACKET CORE

The EPC is comprised of the following standards-compliant network elements:

- Home Subscriber System (HSS~~)~~);
- Policy and Charging Rules Function (PCRF~~)~~);

[24] See *Public Safety and Homeland Security Bureau Offers Further Guidance to Conditional Waiver Recipients on Completing the Interoperability Showing Required by the 700 MHz Waiver Order*, DA 10-923, PS Docket 06-229, May 21, 2010, ¶C, page 4.

- Serving Gateway (SGW~~)~~);
- Packet Data Gateway (PGW~~)~~);
- Mobility Management Entity (MME~~)~~); and
- Element Management System (EMS~~)~~).

These components are internally redundant and designed to provide robust hardware reliability and service assurance. The implementation is able to support EPC component pooling to achieve a highly available and resilient system with disaster recovery capabilities. The IP version supported by each network element is summarized in the table below:

Network Element	IP Version
HSS	IPv4, IPv6
PCRF	IPv4, IPv6
SGW	IPv4, IPv6
PGW	IPv4, IPv6
MME	IPv4, IPv6
EMS	IPv4

E.3 TRANSPORT NETWORK

Transport network resiliency is accomplished by enabling a multi-path IP backbone network. As an analogy, the public Internet is highly available due to inherent mesh and/or ring connection of core routers. Additional resilience in the "last mile" links can be supported by deploying redundant links between the backbone and the network sites. Ethernet switches which comprise the transport nodes also use redundant hardware with dual homed switch ports. Failure of a switch or optical interface module will not result in the loss of traffic flow through the core network. If any failure of switches, links, or modules occurs, traffic will be switched to a backup module or port. Interface redundancy allows backup links and ports. In addition, fiber rings can be leveraged to connect the cell sites and data centers. Agency networks are equipped with redundant links to the data centers.

E.4 RADIO ACCESS NETWORK

The network site civil facilities are constructed according to industry best practice standards for:

- Building construction;
- Seismic robustness;
- Fire suppression;
- Lightening and power surge protection;
- Electromagnetic energy safety and interference management; and
- Power Utility service interconnect and backup power sources.

The implementation includes site-hardening standards which cover the design, construction, and maintenance aspects for each of these disciplines.

In addition, the implementation will include support for deployable units to provide coverage replacement and/or additional site capacity in support of large-scale incidents or planned events.

E.5 MOBILE AND PORTABLE USER EQUIPMENT

The mobile and portable User Equipment (UE) is hardened in accordance with Public Safety best practices. Generally, the eco-system for LTE 700 MHz broadband Public Safety UE's is still emerging. However, we expect that as the eco-system matures, a wide range of device capabilities will be available to Public Safety markets, spanning low-end commercial grade devices to high-end devices compliant with military-specifications. The UE's will support both IPv4 and IPv6 via dual-stack capabilities. Initially, deployed UEs may need to be upgraded to support the dual-stack capability.

F. Radio Frequency (RF) Engineering

RF system performance factors such as coverage footprint, throughput, and capacity depend upon many different variables in RF design, including but not limited to the number of users, desired site density, system cost, and traffic model. These variables are interrelated, such that changes in one variable inevitably impact the others. The State of Texas system is designed to support users and applications in the most cost-effective manner and the design is scalable for future expansion. The following paragraphs describe the tools and methodology used in designing this network.

Among the more critical RF engineering tasks is to prevent and manage out of band emissions (OOBE). The State of Texas commits to implementing the PS LTE network in Band Class 14, in a mutually agreeable manner which eliminates out of band emissions (OOBE), by attenuating transmission power outside the band by at least 43+10 log (P) dB below the transmitter power.[25]

F.1 RADIO ACCESS NETWORK PLANNING

The State of Texas RAN design leverages extensive experience in modeling and designing wireless packet data networks, as well as extensive experience in RF propagation analysis.

The coverage prediction tools used in this analysis follow a two-step process. First, an initial RF propagation analysis of the service area is performed, using known models such as Okumura with shadow loss and TSB-88 statistical methods, to provide a highly reliable prediction of coverage performance. Second, the tool performs a discrete event Monte Carlo simulation to model the LTE system based on operational requirements. This detailed simulation characterizes the system performance and interference analysis based on a particular number of users and a traffic model. Coverage maps are based on these simulation results, which depict coverage at certain performance levels. Coverage maps for the Harris County BIG-Net deployment are provided in Appendix H of this document. Section F.1.4 of this document provides traffic model parameters.

F.1.1 RF Propagation Analysis

The system is designed with coverage prediction tools which were developed to provide an accurate prediction of radio coverage for a particular system by applying proven models to detailed system and environmental data across large geographical areas.

The system factors analyzed in the coverage modeling include: frequency, distance, transmitter power, receiver sensitivity, antenna height, and antenna gain. In general, environmental factors such as terrain variations, obstructions, vegetation, buildings, ambient noise, interference, and land-use are also taken into consideration for the analysis, using the data provided by environmental and

[25] *See Waiver Order*, DA 10-79, PS Docket 06-229, ¶¶ 43-44.

topographical databases. Employing the knowledge gained from many years of practical experience and coverage testing, these coverage designs are performed by computing coverage, and throughput on every tile in a defined service area, thus providing the most accurate coverage prediction and reliability results.

F.1.2 Network Capacity and Throughput Analysis

The design methodology for the network was intended to meet, at a minimum, the current requirements of Harris County. However, it is recognized that over time, State of Texas member agencies will require additional coverage. With these goals in mind, the Harris County BIG-Net is designed to carry a certain amount of load per user per busy hour as explained in the "Modeling Assumptions" section F.1.4 below. Sector utilization information is provided in Appendix ~~J~~H, H.2.6.

F.1.3 Scalability, Expandability, and Cost Effective Design

In any wireless network, the goals of coverage and capacity are intertwined and inversely proportional. Keeping in mind the conflicting needs of a cost effective design and high capacity, the network design methodology allows State of Texas member agencies the use of 4G type broadband applications, while at the same time maximizing coverage from the available sites, to ensure a cost effective implementation. This approach anticipates the current capacity requirements and ensures the ability to add further capacity with the addition of sites in the future. The State of Texas anticipates the need for a larger number of sites over time. The network design offers a flexible approach, starting with an affordable network deployment, with a plan to build coverage and capacity as additional funding becomes available.

F.1.4 Modeling Assumptions

To date, much of Public Safety wireless data usage has been limited to narrowband networks, and few data points are available to shed light on Public Safety usage on LTE networks. While commercial wireless data usage has been increasing significantly in recent years, the more recent widespread use of smart phones has provided some insights into potential data consumption on LTE networks.

In order to arrive at a suitable broadband network profile for Public Safety, certain assumptions for traffic usage in the Harris County region ha~~s~~ve been made. The following parameters were also used for this design:

- 95% area reliability;
- Coverage based on up to 4 HARQ retry attempts;
- Mobile on street coverage using 23 dBm (200 mw) UE~~'~~s;
- 200 concurrent users per eNB;
- Average cell edge data rates of 768 Kbps downlink and 256 Kbps uplink;
- 11.8 dBd antenna gain at the eNodeB;
- Antennas heights ranging from 100-155 feet; and
- Single Frequency Reuse of the 10 MHz PSST spectrum in a 5+5 MHz configuration.

~~A list of initial planned sites and~~Details about the coverage ~~maps is provided~~and site deployment are available in ~~Appendix E of~~the Expansion Modules associated with this document.

F.2 INTERFERENCE MITIGATION

The implementation will employ several techniques and features to mitigate interference among Band 14 eNBs. Before deploying, the State commits to coordinating and addressing interference with bordering and adjacent jurisdictions.[26]

These fall into two general categories: Network Planning and eNB Features. Note that Network Planning techniques may be applied to equipment from any vendor, and thus should be the first line of defense from an interoperability point of view. However, in a multi-vendor environment, eNB Features are dependent to some extent on compatibility of the vendor implementations. Thus, it is possible that vendors of adjacent regions will be required to optimize and/or adapt their implementations for interference mitigation compatibility. The State of Texas will self-certify that interference coordination techniques are implemented by the date of service availability. Below are techniques and features which are planned to be employed in the system.

F.2.1 Network Planning for Interference Mitigation

LTE system capacity and coverage performance depend on interference levels; therefore, interference mitigation is a primary objective of LTE RF system design. Several measures are taken during the system design phase to mitigate interference including selecting appropriate antenna patterns, adjusting the individual sector antenna tilts, and selecting optimal site locations and site separation distances.

F.2.1.1 *Site Separation*

An LTE system can be designed as noise limited or interference limited, depending on the separation distance between sites. In the case of a noise-limited design, the coverage boundary is reached when the desired signal level is within a given threshold of the thermal noise floor. In contrast, when sites are deployed close together in a geographically contiguous manner, performance becomes limited by the co-channel interference as opposed to the thermal noise floor. The site separation distance also depends on the propagation environment and is selected to ensure that all coverage and interference requirements are met. Interference is attenuated more readily in environments where the propagation path loss slope is high, and less readily in environments where the propagation path loss slope is low. The LTE design procedure and tools account for these differences in propagation environment, as well as the noise limited versus interference limited considerations, when determining the optimal site locations and separation distances.

F.2.1.2 *Antenna Down-tilt*

Down-tilting is the method of effectively adjusting the vertical radiation pattern of the antenna of the base station to direct the main energy downwards and reduce the energy directed towards the horizon. Down-tilting can be used to improve the level of coverage close to the site where "nulls" (e.g. coverage holes) may exist due to the effective height of the antenna. Down-tilting can also be used to reduce interference caused by reflections or undesired RF propagation beyond a predetermined footprint.

The final phase of the design process incorporates further detail into the design. This phase may include such items as collecting drive data, to be used to tune or calibrate the propagation prediction model, and fine-tuning of parameter settings, such as antenna down-tilting. This final design process is required in the deployment of a system. The main benefits of ~~downtilting~~down-tilting are:

- Control range of site;

[26] *See Interop Order,* 10-2342, ¶26 and Appendix A, ¶K. See also *Waiver Order*, 10-79, ¶42.

- Reduce energy at the horizon;
- Maximize effective coverage closer to the site; and
- Reduce co-channel interference in adjacent sectors.

The amount of down-tilt depends on the height of the antenna above the ground, the characteristics of the terrain, and the vertical beam-width of the antenna. The horizontal antenna beam width is selected to be narrow enough to limit interference between sectors yet wide enough to ensure reliable coverage. The vertical antenna beam width is selected to balance good coverage within the serving sector and interference mitigation to distant sectors. Antenna tilts are adjusted for each sector to optimize coverage within the serving sector while attenuating interference to distant sectors.

F.2.2 eNodeB Interference Mitigation Features

F.2.2.1 *Inter-cell Interference Coordination (ICIC)*

Inter-cell Interference Coordination (ICIC) is used as a means to improve coverage and edge of cell performance. Prior to the Date of Service Availability, the State of Texas commits to implementing Inter-Cell Interference Coordination on and among the eNodeBs to ensure the network operates without interference.[27] The goal is to achieve an evenly distributed utilization of radio resources between neighboring cells in low-to-medium loading scenarios, while also enabling high utilization of radio resources in high load scenarios.

F.2.2.2 *Frequency Selective Scheduling*

OFDM systems can take advantage of the frequency selectivity of the uplink and downlink channels. Some frequency diversity gain may be achieved by varying subcarrier allocations over the entire carrier bandwidth. Additional diversity gain is possible by utilizing channel characteristics to allocate sub-band allocations that are favorable based on fading and/or interference conditions. The State of Texas may implement either or both of these Frequency Selective Scheduling techniques, depending on vendor-specific capabilities and deployment needs.

G. State of Texas PS LTE Testing

This section provides an overview of the testing commitments, strategies and high-level program overviews for each type of testing envisioned.

G.1 STRATEGIES FOR EFFECTIVE PS LTE TESTING

The State of Texas has embarked upon the development of fair, open, standards-based, and multi-vendor, Conformance, Interoperability and End-to-End Validation Testing plans, by applying the following high level strategies, to:

- Ensure an "even playing field" such that no manufacturer or supplier has an ~~undue~~unfair advantage ~~do~~due to its relationships or deployment status in the State;
- Continue to mandate that all network infrastructure suppliers wishing to deploy equipment in the State of Texas ~~needs~~need to supply verification that the ~~vendor~~supplier is a certified participant in the PSCR PS LTE laboratory project;

[27] See *Interoperability Order*, 10-2342, ¶26 and Appendix A, ¶K.

- Continue to look to PSCR for guidance on how to handle 3GPP standards conformance testing;
- Investigate all options for leveraging IOT activities, including but not limited to PSCR, NVIOT Forum[28], existing carrier labs, "pair-wise" vendor testing[29], third party certified test labs such as PTCRB[30] or Idaho National Labs, and possibly self certification by the manufacturers under certain, stringent conditions;
- Minimize, as much as practical, selection of interface and equipment combinations not currently supported by any current or planned IOT activities;
- Determine the need for state or regional PS LTE interoperability Test Bed and/or how a jointly owned PS LTE test bed could be established; and to
- Allow manufacturers to self-certify, but only when other more open options are not available, and only under certain constraints.

In summary, as directed by the December 10, 2010 *Interoperability Order*, the State of Texas will ensure, through a variety of programs and processes, that the suppliers selected by the State have met all of the Interoperability (IOT) and Conformance Testing objectives.[31] The State will validate that the selected suppliers' network components have received applicable certifications and have fully participated in available interoperability testing programs, such as the PSCR, the Multi Service Forum (MSF~~)~~), or the NVIOT Forum. The State will also validate that the selected suppliers' device components have received applicable certifications from the PCS-Type Certification Review Board (PTCRB). Certifications from additional laboratories, such as the Global Certification Forum, may also be required.

G.1.1 Conformance Testing to 3GPP Standards

The State wholeheartedly agrees with the Commission's tentative conclusion[32] that all PS LTE devices should be subjected to rigorous conformance testing to verify compliance to 3GPP LTE Release 8 or higher standards. Therefore, the State of Texas agrees to comply will all future orders regarding LTE device conformance testing. This requirement will be extended to regional partners as well as part of the processes and regional agreements which will be developed.

G.1.2 Multi-Vendor Interoperability Testing (IOT)

An effective strategy and plan for Multi-Vendor Interoperability Testing (IOT) is among the more critical and powerful mechanisms to ensure sustainable interoperability, and, as importantly, a transparent "interchangeability" among devices and components in a PS LTE network. This entire program and plan will be an area of specific focus and planning, as noted, ~~since~~because the over-riding objective of achieving an open, fair, and highly competitive procurement environment rests so heavily upon it.

As critical, if not more so, the mission critical operational environment demands even more care and investment than commercial cellular devices ~~since~~, as in most cases much more is at stake than a consumer moving to another provider~~,~~. For this reason, the State of Texas agrees with the NTIA

[28] National Vendor Interoperability Testing Forum (NVIOT Forum)

[29] Also recommended in *Comments from Alcatel Lucent*, 06-229, page 22

[30] PTCRB is a global organization created by the Mobile Network Operators to provide an independent evaluation process where GSM/UMTS Type certification can take place. See PTCRB, http://ptcrb.com/.

[31] See *Interoperability Order*, DA 10-2342, PS Docket 06-229, December 10, 2010, ¶D,E.

[32] *See 4th NPRM,* January 26, 2011, ¶106

recommendation that no device or component will be allowed to go into operation until IOT is successfully completed using accredited laboratories.[33]

The State appreciates and agrees with Nokia Siemens in recent reply comments, "that all major vendors perform IOT in adherence to industry-wide principles," and also agrees that IOT policies and requirements need to be standardized under the oversight of a single body.[34]

Per the Third Report and Order[35] all of the LTE interfaces must be supported, while the following interoperability interfaces will receive particular scrutiny and attention for the IOT plans, procedures and compliance to 3GPP Release 8 or higher, these include:

- U_u – LTE over the air interface;
- S6a – Visited MME to Home HSS;
- S8 – Visited SGW to Home PGW; and
- S9 – Visited PCRF to Home PCRF.

~~An important interface for~~Important interfaces already identified as having a high level interchangeability need, would add:

- S1-u – between eNodeB and SGW; and
- S1-MME – between eNodeB and MME.

The list abo~~ut~~ve is preliminary and not necessarily inclusive; additional interoperability and IOT needs may be identified in the multi-vendor architecture definition process.

This program, once developed, will be fully implemented in order to enable interconnection and interoperability with other LTE networks. The State will ensure that all required Interoperability and Conformance test validations have been performed by the proposed interoperability partner, prior to Texas establishing or offering interoperability services to end users. Specifically, the State of Texas will support, monitor, and require that any new PS LTE operator, even of a "sub-core" based system within Texas, has submitted a certification to at least the IOT specified above.

G.1.3 End-to-End Functional Validation Testing

This stage specifies the functional and performance end-to-end validation tests that will be executed as part of the Trial Network testing plan. This stage is started ~~once~~after interoperability testing has completed. The following aspects will be tested:

- Inter-Node Communication Verification;
- Operations and Maintenance (OAM~~)~~);
- Single User Stationary Calls;
- Multiple Users Stationary Calls;
- Single User Throughput vs. Mobility;
- Single User with QoS;
- Multiple Users with QoS; and
- Multiple Users Mobility with QoS.

As part of the goal to achieve nationwide interoperability, the following applications and interfaces will be tested as part of the trial activities, with testing distributed over time and as the technology matures

[33] *See Comments of the NTIA*, June 10, 2011 section 5, page 21.
[34] *See Comments of Nokia Siemens Networks*, PS 06-229, page 29.
[35] See *Third Report and Order*, January 26, 2011 ¶12.

(e.g., features are added) and the standards evolve. The applications and interfaces to be tested in end-to-end validation are described below.

G.1.3.1 *Applications*

- Internet access (Initial Trial)
- VPN access to any authorized site and to home networks
- Status or information homepage
- Access to responders under the Incident Command System
- Field-based server applications (Initial Trail)

G.1.3.2 *Interfaces*

Uu-LTE air interface (Initial Trial)	S9-Visited PCRF to Home PCRF
S6a-Visited MME to Home HSS	S1-U-eNB to SGW
8-Visited SGW to Home PGW	S1-MME-eNB to MME

A listing of LTE test tools utilized by the implementation is included in Appendix D.

G.1.4 Summary of Testing Commitments

The State of Texas commits to complying with the following testing requirements as recommended and mandated:

- The State commits to deploying vendor equipment which has been subjected to rigorous Conformance Testing by certified laboratories.[36] Within six months of either the availability of PTCRB testing or the Date of Service Availability, whichever is later, the State of Texas commits to completing the PRCRB process and to submitting these certification as part of the quarterly reports.[37]
- The State of Texas commits to performing interoperability testing (IOT) on a minimum of Uu, S6a, S8 and S9 interfaces, recognizing a more comprehensive scope may be needed. The state also commits to testing on a regular basis as the network changes and evolves.[38]

~~A. Deployment~~

~~The following project plan reflects an 18site deployment which comprises the initial phase of deployment within the State of Texas. A .pdf format file has been included in this document in Appendix G.~~

~~Subsequent deployment phases will be planned in accordance with requirements of the associated funding sources.~~

~~The State of Texas will provide the Commission with documented results of the IOT described in Section G on or before the conclusion of the 18 site deployment which comprises the initial phase of deployment. Further, the State of Texas will provide results of future IOT on or before the conclusion of each subsequent phase of the network build-out.~~

[36] *See Interoperability Order*, 10-2342, Appendix A, ¶D.
[37] *Ibid*.
[38] *Ibid* ¶E.

H. Operations, Administration, Maintenance & Provisioning

The OAM&P implementation is comprehensive and standards-based. It encompasses the entire lifecycle, including system design, assembly and staging, installation and commissioning, operations, optimization, and billing. The operations implementation includes Fault Management, Configuration Management, Accounting Management, and Performance Management (FCAPS) support for the system infrastructure and devices, as well as the following advanced capabilities.

H.1.1 Network Management System (NMS)

The NMS provides an integrated point of control for the system. It includes network monitoring and recovery, security monitoring, performance management analysis and reporting, integrated configuration management, and infrastructure software upgrade.

H.1.2 Over The Air (OTA) Device Management

The Device Management implementation provides an easy-to-use interface to perform software upgrade, configuration and provisioning of a variety of public safety devices, including portables, vehicular modems, USB modems, and mobile data terminals.

H.1.3 Self Organizing Network (SON)

The system SON implementation, fully based on 3GPP standards, provides a self-configuring, self-healing, and self-optimizing RAN implementation. System planning requirements are significantly reduced, as cell neighbors and LTE physical cell identifiers are automatically determined by the RAN infrastructure. Infrastructure equipment is automatically discovered and provisioned. The SON implementation should simplify emergency coverage such as Cell On Wheels (COW). Key features of the SON offering include:

- Automatic Neighbor Relations (ANR), which automatically determines the neighbors for each cell in the network, and continuously optimizes the neighbour lists~~.~~;
- Automatic Physical Cell ID (PCI), which automatically computes the LTE physical cell identifier for each cell in the network~~.~~; and
- Base Station Integration Manager, which significantly simplifies planning, preparation, deployment and commissioning of eNBs.

H.1.4 Integrated Billing

The system provides an integrated billing implementation that supplies charging information, including the ability to support complex roaming and usage-based accounting. The billing implementation provides robust data analysis, reporting, invoicing and data warehousing.

OAM&P exhibits the following points of interoperability:

- The self-organizing network (SON) consists of use cases and interfaces defined by 3GPP and algorithmic processing to be defined by each vendor. If SON is utilized in LTE border cells, SON algorithm compatibility must be verified between vendors. Automatic Neighbor Relations (ANR) and Automatic Physical Cell ID (PCI) are two examples of SON algorithms that will need to be verified for interoperability between LTE vendors if LTE border cells enable these SON capabilities. A simpler option is ~~to~~ not to enable SON capabilities in LTE border cells.

- Subscriber provisioning use cases and interfaces between the Public Safety Agency, Regional Public Safety Network and the Commercial Carrier Network must be formalized.
- Devices should be able to support Open Mobile Alliance Device Management (OMA-DM) clients in order to support standards-based device management implementations.
- Billing reconciliation between public safety LTE networks requires the exchange of billing records. Billing records will be exported and imported between networks using TAP3 record formats.

Appendices

Appendix A DEFINITIONS AND ACRONYMS

ACB	Access Class Barring
AF	Application Function
ARP	Allocation and Retention Priority
BBTF	Broadband Task Force
CAD	Computer Aided Dispatch
CJIS	Criminal Justice Information System
DNS	Domain Name Service
EMS	Element Management System
EPC	Enhanced Packet Core
E-RAB	EUTRAN Radio Access Bearer
E-UTRA	Evolved Universal (or UMTS) Terrestrial Radio Access
FIPS	Federal Information Protection Standards
GBR	Guaranteed Bit Rate
GPS	Global Positioning System
GTP	Generic Tunneling Protocol
HAAT	Height Above Average Terrain
HO	Handover
HSS	Home Subscriber Server
ICIC	Inter-Cell Interference Coordination
IMSI	International Mobile Subscriber Identity
IKE	Internet Key Exchange
IOT	Inter-Operability Testing
IP	Internet Protocol
IPX	IP Exchange (see http://www.gsmworld.com/our-work/programmes-and-initiatives/ip-networking/ipi_documents.htm)
LTE	Long Term Evolution
MBMS	Multimedia Broadcast Multicast Service

MBR	Maximum Bit Rate
MME	Mobility Management Entity
MVPN	Mobile Virtual Private Network
NAPT	Network Address and Port Translation
NAS	Non-Access Stratum
NAT	Network Address Translation
NAPT	Network Address and Port Translation
NCIC	National Crime Information Center
NOC	Network Operations Center
NPSTC	National Public Safety Telecommunications Council
OAM&P	Operations, Administration, Maintenance, and Provisioning
OMA-DM	Open Mobile Alliance – Device Management
OOBE	Out of Band Emissions
PC	Personal Computer
PCRF	Policy and Charging Rules Function
PDN	Packet Data Network
PGW	PDN Gateway
PKI	Public Key Infrastructure
PLMN ID	Public Land Mobile Network Identifier
PMIP	Proxy Mobile IP
PSST	Public Safety Spectrum Trust
PSCR	Public Safety Communications Research (program)
PTCRB	PCS Type Certification Review Board
PTT	Push To Talk
QCI	QoS Class Identifier
QoS	Quality of Service
RAN	Radio Access Network
RAT	Radio Access Technology
RFI	Request for Information

RICS	Regional Interoperable Communications System
RRC	Radio Resource Control
SGW	Serving Gateway
SIB	System Information Block
SON	Self Organizing Network
SWBN	Shared Wireless Broadband Network
TAU	Tracking Area Update
TS	Technical Specification
TSB	Telecommunications System Bulletin
TxDPS	Texas Department of Public Safety
UASI	Urban Area Security Initiative
UE	User Equipment
VLAN	Virtual Local Area Network
VoIP	Voice over Internet Protocol
VPN	Virtual Private Network
WAN	Wide Area Network

Appendix B COMMITMENT TO COMPLIANCE SUMMARY

The following table summarizes the of State of Texas' commitment to comply with the Bureau's requirements regarding Public Safety LTE. This is not an all-inclusive list, but rather, key elements are presented here for easy reference.

In summary, the State of Texas agrees and commits to remain subject to existing technical rules, the requirements of the *Texas Waiver Order* (11-863), the *Interoperability Order* (10-2342), the January 2011 *Third Report and Order* (11-6), the May 2011 *Fourth Report and Order* (10-79) and any future rules which may be adopted in future proceedings.[39]

Item No.	Statement of Commitment to FCC Requirement	FCC References
Public Safety Roaming on Petitioners' Networks		
1	The State of Texas agrees and commits to honoring roaming and access requests from any qualified entity.[40] Additionally, the State agrees to refer the matter to the Bureau if an agreement with the outside entity cannot be reached within ninety days.	10-2342 Appendix A, ¶A; 10-2342 ¶10
2	The State of Texas commits to supporting home-routed traffic, such that a "visiting" user's traffic is routed back to the home network to enable the use of visitors' home resources.	10-2342 Appendix A, ¶A; 10-79 ¶45; 10-2342 ¶9
3	The State of Texas commits to supporting local breakout traffic, such that a "visiting" user is able to utilize the resources of the State of Texas PS LTE network.	10-2342 Appendix A, ¶A; 10-79 ¶45; 10-2342 ¶9
Technology Platform and System Interfaces		
4	The State commits to a uniform deployment of at least 3GPP standard E-UTRA Release 8 and associated EPC, prior to the date of service availability.	11-6 ¶10, ¶12; 10-79 ¶38
5	Public Safety LTE devices deployed in the State of Texas shall support Band Class 14 using a 5 MHz broadband channel in FDD mode per 3GPP TS 36.101.	10-79 ¶47
6	The State commits to deploying LTE such that backward compatibility between all subsequent releases from Release 8 and onwards is ensured.	11-6 ¶11
7	Prior to the Date of Service Availability, the State of Texas agrees to support the following interfaces as	10-2342 Appendix A, ¶B; 10-79 ¶47, 10-2342 ¶11, ¶19;

[39] *See Third Report and Order*, 11-6, PS Docket 06-229, ¶14. See also *Waiver Order*, Recommended Requirements, ¶ A.

[40] *See Waiver Order*, DA 10-2342, PS Docket 06-229, Recommended Requirements, Public Safety Roaming on Petitioners' Networks, Appendix A,¶ A.

	defined by the 3GPP Standard: Uu – LTE over the air interface S1-MME – eNb and the MME S1-u – eNb and the SGW S5 – SGW and PGW S6a – Visited MME and the Home HSS S8 – Visited SGW and Home PGW S9 – Visited PCRF and Home PCRF S10 – MME to MME for Category 1 Handover S11 – MME and SGW SGi – PGW and external PDN X2 – eNodeB to eNodeB Gx – PGW and PCRF Rx – PCRF and AF located in PDN Gy/Gz – online/offline charging interfaces	11-6 ¶12
8	The State of Texas commits to supporting both IPv4 and IPv6.[41]	10-2342 Appendix A, ¶B; 10-2342 ¶13
Network Identifiers		
9	The State commits to submitting, at least ninety days prior to its date of service availability, notice to the Bureau of its need for a PLMN ID for its network.	10-2342 Appendix A, ¶C; 10-2342 ¶16
Interoperability Testing (IOT)		
10	Within six months of either the availability of PTCRB testing or the Date of Service Availability, whichever is later, the State of Texas commits to completing the PRCRB process and to submitting this certification as part of the quarterly reports.	10-2342 Appendix A, ¶D; 10-2342 ¶18
11	The State of Texas commits to performing interoperability testing (IOT) on a minimum of Uu, S6a, S8 and S9 interfaces, recognizing a more comprehensive scope may be needed. The state also commits to testing on a regular basis as the network changes and evolves.	10-2342 Appendix A, ¶E.
Operation of Fixed Stations		
12	The State of Texas agrees and commits to limiting network access of fixed stations on a secondary, non-interference basis only.	10-2342 Appendix A, ¶F
Performance		
13	The State of Texas commits to implementing the network such that the network provides outdoor coverage at minimum data rates of 256 Kbps uplink (UL) and 768 Kbps downlink (DL), for all types of	10-2342 Appendix A, ¶G; 10-2342 ¶22

[41] A breakout of IPv4 vs IPv6 by core functional element is provided in Section E.2 of this document.

	devices, for a single user at the cell edge, based on a sector loading of seventy percent, throughout the entire PS LTE network coverage area.	
Coverage and Coverage Reliability		
14	The State of Texas commits to submitting a plan to achieve significant population coverage within Texas within ten years of the initial Date of Service Availability.	10-2342 Appendix A, ¶H; 10-2342 ¶23
15	The State of Texas commits to implementing the PS LTE coverage such that the probability of coverage is 95 percent for all services and applications throughout the network.	10-2342 Appendix A, ¶I; 10-2342 ¶24
Security and Encryption		
16	The State of Texas commits to supporting the optional security features specified in 3GPP TS 33.401, which include integrity protection, verification of data, and ciphering and deciphering of data. The State also commits to supporting network layer VPNs.	10-2342 Appendix A, ¶J 10-2342 §25; 10-79 §47
Interference Mitigation		
17	Before deploying, the State commits to coordinating and addressing interference with bordering and adjacent jurisdictions.	10-2342 Appendix A, ¶K 10-79 §42
18	Prior to the Date of Service Availability, the State of Texas commits to implementing Static Inter-Cell Interference Coordination on and among the eNodeBs to ensure the network operates without interference.	10-2342 Appendix A, ¶K 10-2342 ¶26
19	The State of Texas commits to implementing the PS LTE network in Band Class 14, in a mutually agreeable manner which eliminates out of band emissions (OOBE) by attenuating transmission power outside the band by at least 43+10 log (P) dB below the transmitter power.	10-79 ¶43-4
Applications		
20	Consistent with the NPSTC Broadband Task Force report, and to support a common set of applications for the nationwide network, the State of Texas commits to deploying, at a minimum, the following applications and services on the PS LTE network: authorized VPN access, Status Information Homepage, access to users under ICS and field-based server applications.	10-79 ¶46
Reporting		
21	The State of Texas commits to submit Interoperability Showings which details how the State of Texas, as a	11-863 ¶3

	waiver recipient, will ensure operability and interoperability for its PS LTE network. Additionally, under the Order, as Texas deploys the network in phases, each phase will carry an independent obligation to submit an updated Interoperability Showing.[42]	
22	The State of Texas commits to only deploying equipment from vendors who are certified participants in the PSCR Demonstration Network.	10-79 ¶61
23	The State of Texas commits to submitting Quarterly Reports in consultation with the PSST. These reports will provide updates and progress in three areas: (1) planning, (2) funding and (3) deployment.	10-79 ¶63-64
24	In the Quarterly Report following the Date of Service Availability, the State of Texas commits to submitting a plan for conducting interoperability testing (IOT) for the Uu, S6a, S8 and S9 interfaces.	10-2342 Appendix A, ¶E;

[42] *See Texas Waiver*, DA 11-863, ¶13, footnote 33.

Appendix C LTE/EPC FUNCTIONS AND INTERFACES

This section provides a detailed description of the LTE RAN and EPC infrastructure elements, as well as their corresponding interfaces, and is provided as a supplement to sections ~~A~~C.1, ~~A~~C.2, and ~~A~~C.3.

eNB ~~-~~– The eNodeB (eNB) provides the user plane and control plane protocol terminations toward the UE. The eNB consists of the inter-working function between the backhaul interface and the base band interface, the base band processing elements for the air interface, and the radios.

- Radio Resource Management ~~-~~– assignment, re-assignment, and release of radio resources
  - Radio Bearer Control (RBC) ~~-~~– Responsible for the Establishment, Maintenance, and Release of radio resources associated with specific radio bearers. The RBC function must maintain the quality of existing sessions when conditions change due to environmental and mobility activity.
  - Radio Admission Control (RAC) ~~-~~– Responsible for maximizing the radio resource utilization by intelligent admission or rejection of new radio bearer requests.
  - Connection Mobility Control (CMC) ~~-~~– Responsible for the management of radio resources during active or idle mode mobility of the UE~~'~~s.
  - Dynamic Resource Allocation (DRA) ~~-~~– Packet Scheduler (PS) ~~-~~– Responsible for the scheduling of both user plane and control plane packets over the air interface. Scheduling takes into account QoS requirements of users, radio conditions, and available resources~~, etc.~~ to efficiently utilize the radio resources for all active users.
- MME Selection when UE initially attaches ~~-~~– A single eNB may have communication links to multiple MMEs. The controlling MME for each session must be selected if the UE does not indicate a specific MME to be used, or if the MME specified by the UE is unreachable.
- Routing user plane data to the SGW ~~-~~– A single eNB may have communication links to multiple SGWs. The data stream for each UE must be routed to the appropriate SGW.
- Scheduling and transmission of paging messages received from the MME.
- Scheduling and transmission of broadcast information received from the MME or configured from the Element Manager ~~-~~– The scheduling on the appropriate radio resource block and periodic broadcasting is performed by the eNB.
- Measurement gathering for use in scheduling and mobility decisions ~~-~~– Scheduling and handover decisions are performed based on uplink related measurement data from the eNB and downlink related measurement data from the UE. The eNB configures the measuring and reporting criteria and collects the data for input to the scheduling and handover functions.
- Radio Protocol Support
  - Physical Layer (Control and Bearer)
  - MAC (Control and Bearer)
  - RLC (Control and Bearer)
  - PDCP (Control and Bearer)
  - RRC (Control)
  - Session trace

- Inter-eNB handover preparation, Context & Buffer forwarding, Inter-cell interference coordination.
- eNB also forwards buffered downlink data during the Inter eNB handovers using non-guaranteed delivery of user plane PDUs.

MME – The MME (Mobility Management Entity) manages authenticating users on the EPC and tracks active and idle users in the RAN. The MME pages users when triggered by new data arriving for an idle user at the assigned SGW. When a user attaches to an eNB, the eNB selects a serving MME, the serving MME selects a SGW and a PGW to handle the users bearer packets. The MME provides the following functions:

- Non-Access Stratum (NAS) Signaling. The MME is the termination point in the network for ciphering/integrity protection for NAS signaling and handles the security key management.
- Authentication: The MME is responsible for authenticating the UE by interacting with the HSS and is also responsible for the generation and allocation of temporary identities to UE's.
- Idle State Mobility Handling. The MME is responsible for idle mode UE tracking and paging procedure including retransmissions. The MME handles page request to its associated eNBs that contained the tracking area list last registered by the UE.
- EPC Bearer Control. The MME is involved in the bearer activation/deactivation process and is also responsible for selecting the SGW and PDN-GW for a UE at the initial attach, dedicated bearer activation, service request, and handover involving MME or SGW relocation.

SGW – The Serving Gateway terminates the S1-U interface towards EUTRAN and is also the local mobility anchor for the UE. The mobility anchor function applies to a mobile in the EUTRAN. For each UE associated with the Evolved Packet System (EPS), at any given point of time, there is a single serving SGW. The SGW maintains a packet buffer for each idle UE and holds the packets until the UE is paged and an RF channel is re-established. The SGW maintains a connection to a PGW for each UE. The SGW provides the following functions:

- Local Mobility Anchor point for inter-eNB handover;
- Packet routing and forwarding;
- Assist the eNB reordering function during inter-eNB handover by sending "end marker" packets to the source eNB immediately after switching the path; and
- E-UTRAN idle mode downlink packet buffering and initiation of network triggered service request procedure.

PGW – The Packet Data Network Gateway (PGW) is the gateway which terminates the SGi interface towards the PDN (e.g. agencies network). The PGW is a macro mobility anchor and is responsible for UE address assignment. The PGW provides the following functions:

- The Packet Data Network Gateway terminates the SGi interface towards the PDN.
- The PGW supports connectivity of UE's traffic to specified interfaces based on APN (Access Point Name). The APN determines which PDN a UE is connected to.
- UE IP address allocation, DHCPv4 (server and client) and DHCPv6 (client, relay and server) functions

- The PGW is the source of service data flow based charging records for the UE.
- The PGW acts as the macro mobility anchor for the UE across EUTRAN.
- UL and DL bearer binding and UL bearer binding verification.
- Transfer of (QoS) policy and charging rules from PCRF to Policy and Charging Enforcement Function (PCEF) in the PGW. Policing and shaping the traffic rate of the user's downlink EPS bearers.
- Transport level packet marking in the uplink and downlink, e.g. setting the DiffServ Code Point, based on the QCI of the associated EPS bearer.

HSS – The HSS stores UE subscription and authentication data for authenticating/authorizing UE access. The HSS provides the following functions:

- Authentication and authorization data for the UE;
- Location information of the UE (MME and PGW serving the UE~~)~~);
- Lawful intercept support; and
- The HSS in the implementation shares the UE subscriber database with the PCRF.

PCRF ~~-~~– The PCRF provides network control regarding the service data flow detection, gating, QoS authorization and flow based charging (except credit management) towards the network element. The PCRF supports dynamic interfaces towards applications and a rule based engine that allows policy rules to be executed and the resulting policy passed to the PGW. The PCRF can pass both QoS and charging rules to the PGW. The PCRF stores subscription profile records and provides the following functions:

- PCRF decides how service data flows will be treated in the PGW, and ensures that the PGW user plane traffic mapping and treatment is in accordance with the user's subscription profile.
- PCRF will check that the service information is consistent with both the operator defined policy rules and the related subscription information. Service information will be used to derive the authorized QoS for the service.
- PCRF authorizes QoS resources. The PCRF uses the service information and/or the subscription information to calculate the proper QoS authorization (QoS class identifier, bit rates, etc.).
- PCRF can use the subscription information as basis for the policy and charging control decisions.
- PCRF supports different bearer establishment modes (UE-only, UE/Network or Network-only).

~~Supported~~C.1 LTE Interfaces~~:~~

LTE-Uu ~~-~~– This interface carries control and user (bearer) signaling between the eNB and the UE to facilitate the delivery of high speed data services to the end user. LTE-Uu provides the associated control plane signaling supports mobility management, session management, admission control, QoS management, radio resource/connection management and all other functions that are necessary to enable the transfer of application data across the user plane.

Gx ~~-~~– Provides transfer of (QoS) policy and charging rules from PCRF to the PGW.

Gy/Gz – This interface is based on the GTP prime protocol. It is used to transfer Charging Detail Records (CDRs) from a PGW and/or SGW to a Charging Gateway in support of online/offline charging.

Rf/Ga – This interface based on the DIAMETER protocol. It is used to transfer Charging Detail Records (CDRs) from a PGW and/or SGW to a Charging Gateway in support of offline charging.

Rx – This reference point enables transport of application level session information from application to PCRF. Such information includes IP filter information to identify the service data flow and Media/application bandwidth requirements for QoS control.

S1-MME – Control plane signaling between the eNB and the MME

S1-U – The S1-U provides bearer plane support between the eNB and the SGW. In general, procedures for the S1-MME interface may affect the setup or teardown of a bearer link; however, the standards do not indicate specific procedures between the eNB and SGW. This path interface is for uplink and downlink data only.

S5 – The S5 interface provides user plane tunneling and tunnel management between SGW and PGW. It is used for SGW relocation due to UE mobility and if the SGW needs to connect to a non-collocated PGW for the required PDN connectivity.

S6a – This interface enables the transfer of subscription and authentication data used for UE access to the LTE system. It carries control messages between the MME and the HSS over DIAMETER.

S8 – Roaming version of S5 for communication between a visited SGW and a home PGW.

S9 – The S9 interface is between a home PCRF and a visited PCRF in the case of local breakout.

S10 – This interface carries control messages between MMEs.

S11 – This interface carries control messages between the MME and the SGW.

SGi – This interface carries bearer traffic between the UE and the agencies PDN. This interface optionally carries control traffic between the PGW and the agencies PDN to facilitate IP address allocation, IP parameter configuration and AAA services associated with UE activity.

X2 – The X2 interface provides a control plane and bearer plane connection between eNBs to support load management and handover procedures.

Appendix D LTE TEST TOOLS

LTE Test Tools		
Function	**Tool** (specified or equivalent)	**Description**
Spectrum Analyzer	Agilent SA	*Cell coverage, characteristics*
Air Interface Monitor	UE Tool	*Synchronization, system broadcast information, registration, DL/UL transfers*
	Sanjole WaveJudge	
Network Monitor	Wireshark – Windows PC	*Protocol dissectors to analyze L1/L2/L3, per segment*
Service Simulator	Iperf – Windows PC	*Service emulator using TCP and UDP pseudo packets and setting up bearer types and QoS over the air*
Service Evaluator	Wireshark – Windows PC	*Transport Quality (Loss, Latency, Jitter, Throughput), Handover Latency*
~~UE~~**User Equipment**	Available UE	*User Equipment for test will be ~~provided~~supplied by vendors*

~~Appendix A. HARRIS COUNTY INITIAL PHASE COVERAGE MAPS~~

Appendix E MTBF INFORMATION (CONFIDENTIAL)

[redacted]

[redacted]

[redacted]

Appendix F 3G ROAMING AND COVERAGE

The PS LTE network in the State of Texas is expected to build-out in various locations and phases across the State. Within each location, build-out will likely be a progressive process, based on a variety of funding and logistical factors. These build-outs will expand and mature over time to provide outstanding local, and eventually, state-wide coverage. However, in the interim there will be locations where the PS LTE network has not been completely built out, and hence contiguous coverage will not be achieved. Additionally, the PS LTE coverage may not reach within its planned coverage area. In addition, State of Texas first responders may be called to respond to mutual aide requests from bordering states, and other areas nationwide, that may require communications to perform their duties . In these locations, utilization of available public carrier 4G LTE and 3G networks can be leveraged to supplement coverage and fill the coverage gaps. Currently, many PS agencies utilize public 4G and 3G carrier networks for their data needs, and this practice will be extended during the PS LTE network build out.

This approach is similar to how commercial carriers are building out their LTE broadband networks and providing coverage for their users during the build out phases. An example VZW coverage map for the Harris County area is shown below and can be found at: http://www.verizonwireless.com/b2c/CoverageLocatorController?requesttype=NEWREQUEST&zip=77077&city=Houston&state=TX

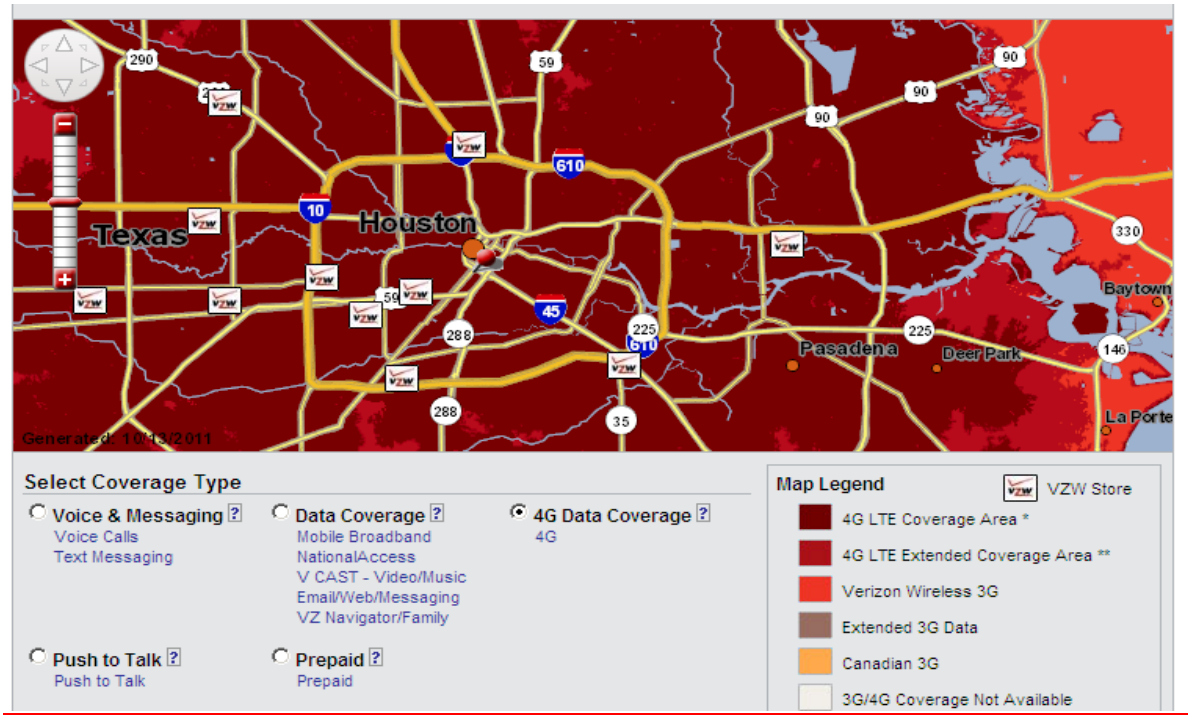

This map illustrates that a mixture of 3G and 4G coverage exists in the far eastern region of Harris County. Broader views of the VZW coverage map show that 3G coverage serves as an "under layer" while islands of 4G coverage are being built-out in selected regions.

F.1.1 Expected Device Behavior (confidential)

[redacted]

F.1.2 User Experience (confidential)

[redacted]

[redacted]

F.1.3 Device Frequency Information (confidential)

[redacted]

[redacted]

[redacted]

Appendix G EXPANSION MODULE PROCESS

This section describes the process by which the State of Texas prefers to implement expanding coverage of the PS LTE network. Due to the very nature of system deployment, plans can be dynamic and tend to be finalized in phases as funding, details, and site locations are planned and confirmed. We recommended that "Expansion Modules" be permitted to streamline the process for obtaining permission to operate as the coverage of PS LTE expands over time in the State of Texas.

The following section, titled "Expansion Module 1" provides deployment details for the initial site build-out for BIG-Net by Harris County. As additional expansion plans are updated and/or received, the State would simply file a similar Expansion Module N document, which avoids the need to refile the entire *Texas Interoperability Showing*. Each expansion module will be accompanied by a "Declaration of Compliance" that the State of Texas will continue and maintain the commitment to compliance as detailed in the *Texas Interoperability Showing*. The Expansion Modules can then be assessed and acted upon based upon their individual merits.

After the deployment defined by the Expansion Module is complete, the State shall submit to the Bureau a coverage commitment report as an update to the corresponding Expansion Module. This information will include the coverage testing results and will provides verification that the coverage commitment within the defined area(s) has been achieved. Any changes to the polygon boundaries, which are typical in any wireless deployment, will be submitted as part of the module update package.

The State of Texas prefers this approach because it "detaches" the detailed, highly dynamic aspects of coverage deployment plans from the overall program, strategic, technology and interoperability commitments described in the body of the *Interoperability Showing* policy document. This approach offers the opportunity for the Bureau to act and manage multiple deployment modules simultaneously, allowing the State to submit the applications in parallel, reducing the calendar time and effort for the individual entities involved.

Appendix H EXPANSION MODULE 1: BIG-NET DEPLOYMENT

The following sections illustrate and describe the coverage rollout plans for both the eventual and initial phases of deployment in the State of Texas. As plans and submissions from other entities in Texas are submitted, this section will be updated to provide a complete and up-to-date view.

H.1 BIG-Net Deployment: Harris County Build-Out

This section provides the longer term view of the BIG-Net deployment and is provided for informational purposes only to enable the Bureau to better understand the overall plan as the coverage for the initial deployment, described in the next section, is considered.

It should be emphasized that the full build-out of the 81 sites is a project plan, is but the plan has not yet proceeded through final design, approval or funding stages.

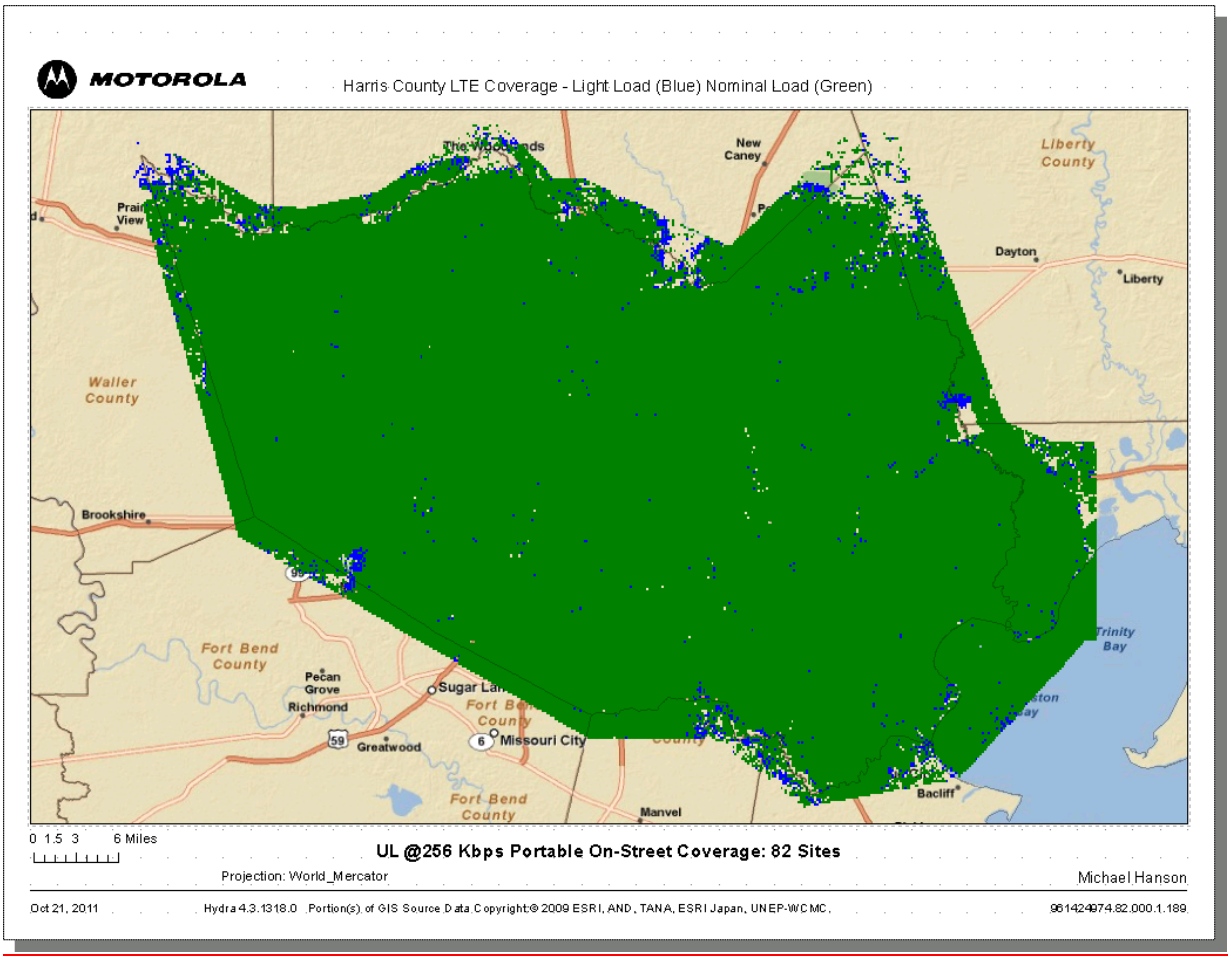

Fig. A. Envisioned build out of BIG-Net, showing the Harris County coverage area which achieves 95% probability of coverge for a 256 Kbps uplink connection using a portable, on-street device.

H.2 Harris County BIG-Net: Initial Phase Coverage

This appendix presents the coverage maps ~~which~~that comprise 16 sites of the initial deployment in the Houston area. Two more ~~sites are planned but~~site locations are not shown in the coverage maps, one ~~which will be deployed at one of the core sites for testing only~~ that is projected for the training center in College Station, Texas and another ~~one~~ which is projected for a mobile Cell-on-Wheels site. ~~The maps are shown by device type, vehicular modem, portable on street and USB dongle, and indicate both "~~

As instructed by the Bureau, the coverage design team has identified the precise operational contour within which 95% coverage reliability for an onstreet portable device performing an uplink transfer at 256 Kbps. The coverage contour has been divided into two coverage polygons, A and B, as shown in the coverage maps below.

Following approval of the *Texas Interoperability Showing* document and this associated module, the State of Texas is requesting authorization from the Public Safety Homeland Security Bureau to begin "Operational Testing" within the boundaries of the coverage commitment polygons A and B precisely defined by the location coordinates provided in the following sections. Upon successful system and coverage verification, issuance of the permanent PLMN ID by February 1, 2012 as requested, Texas requests permission to "Go Live" and initiate PS LTE Service Availability to public safety end users on or about August 1, 2012.

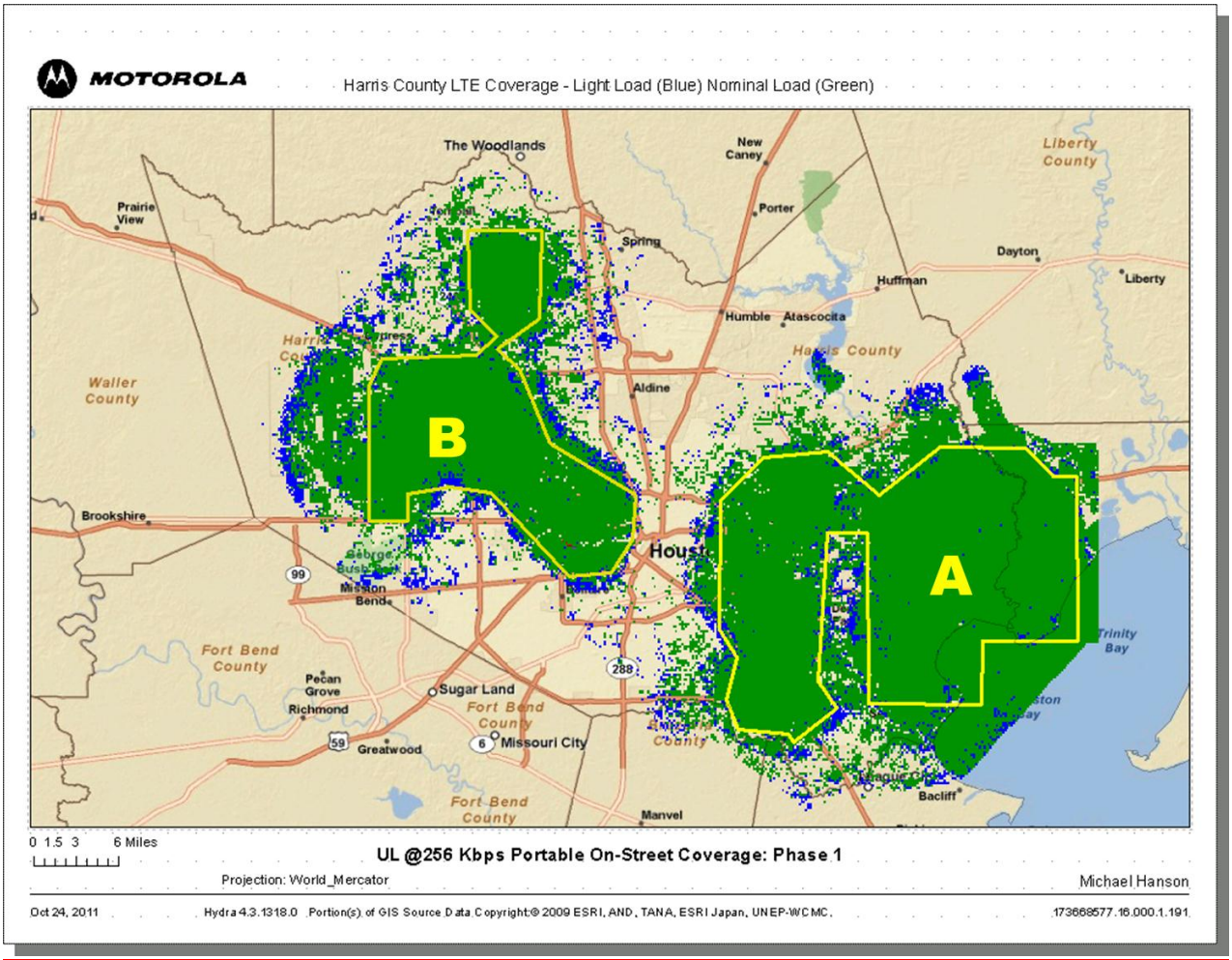

Fig B. *Portable On-Street Uplink (UL) at 256 Kbps coverage polygons define the coverage area boundaries for the 95% coverage reliability contour. Nominal loading coverage areas are shown in green, the slightly expanded coverage area under light load is shown in royal blue.*

H.2.1 Coverage Commitment Polygon A

The following locations articulate the precise boundaries for which the coverage commitment being made in section H.2 of this Appendix. The following coordinates correspond to BIG-Net Polygon A, notated in the coverage maps in section H.2.

	Latitude				*Longitude*			
A	Deg	Minutes	Seconds	North	Deg	Minutes	Seconds	West
1	29	51	20.3	N	95	8	38.7	W
2	29	51	1.9	N	95	13	9.4	W
3	29	48	18.1	N	95	16	18.3	W
4	29	40	20.1	N	95	16	20.0	W
5	29	38	33.1	N	95	15	3.1	W
6	29	35	54.3	N	95	15	49.9	W
7	29	34	5.7	N	95	14	59.8	W
8	29	33	47.3	N	95	11	22.5	W
9	29	33	15.5	N	95	11	5.8	W
10	29	35	22.6	N	95	7	56.9	W
11	29	37	4.5	N	95	9	18.8	W
12	29	46	19.5	N	95	8	35.3	W
13	29	46	19.5	N	95	5	48.2	W
14	29	35	41.0	N	95	5	43.2	W
15	29	35	37.6	N	94	57	38.4	W
16	29	39	35.0	N	94	57	33.4	W
17	29	39	33.3	N	94	50	45.6	W
18	29	49	48.4	N	94	50	47.2	W
19	29	49	49.4	N	94	52	27.5	W
20	29	51	37.0	N	94	54	26.2	W
21	29	51	38.7	N	95	0	32.3	W
22	29	48	41.5	N	95	4	58.3	W
1	29	51	20.3	N	95	8	38.7	W

H.2.2 Coverage Commitment Polygon B

The following locations articulate the precise boundaries for which the coverage commitment being made in section H.2 of this Appendix. The following coordinates correspond to BIG-Net Polygon B, notated in the coverage maps in section H.2.

	Latitude				*Longitude*			
B	Deg	Minutes	Seconds	North	Deg	Minutes	Seconds	West
1	30	5	6.2	N	95	34	18.7	W
2	30	5	6.2	N	95	29	2.0	W
3	29	59	38.2	N	95	29	13.4	W
4	29	57	44.6	N	95	32	7.5	W
5	29	56	27.7	N	95	30	30.3	W
6	29	51	51.4	N	95	28	25.4	W
7	29	48	38.4	N	95	22	19.6	W
8	29	45	50.6	N	95	22	34.7	W
9	29	43	50.7	N	95	24	0.5	W
10	29	43	35.6	N	95	27	7.2	W
11	29	48	43.4	N	95	32	36.5	W
12	29	49	11.2	N	95	35	28.1	W
13	29	48	40.9	N	95	38	37.3	W
14	29	47	2.5	N	95	38	37.3	W
15	29	47	8.8	N	95	41	20.0	W
16	29	55	25.9	N	95	41	20.0	W
17	29	57	4.3	N	95	40	28.3	W
18	29	57	18.1	N	95	33	49.6	W
19	29	58	30.0	N	95	32	13.8	W
20	30	0	11.0	N	95	34	8.6	W
21	30	5	6.2	N	95	34	18.7	W
1	30	5	6.2	N	95	34	18.7	W

H.2.3 eNodeB Site Locations (confidential)

[redacted]

H.2.4 Portable Downlink Coverage Map

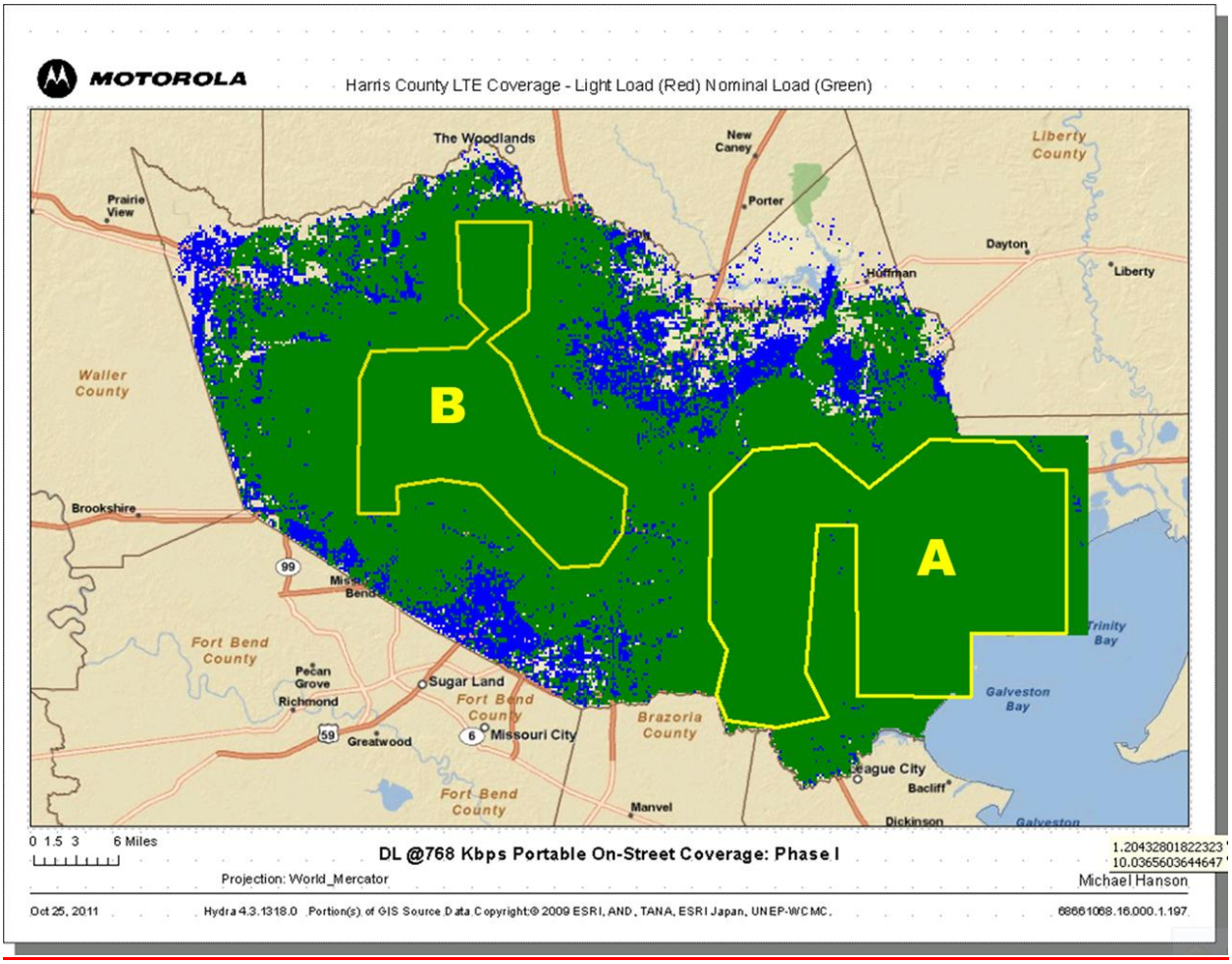

***Fig C**. Portable On-Street Downlink (DL) at 768 Kbps.*

H.2.5 Light Load~~" and "Nominal Load" scenarios.~~ Coverage Contour

The slightly smaller nominal load coverage areas are shown in green, while the slightly larger light load coverage areas are indicated by the green plus the blue areas.

The nominal load maps were generated using an approximation of the Application Load Model with 200 users per site with minimum application data rate of 256 Kbps uplink and 768 Kbps downlink. The light load maps were generated with three users per site in the system, using minimum load parameters of one megabyte per hour per user in both the uplink and downlink directions, while maintaining 256 Kbps uplink and 768 Kbps downlink.

The coverage areas in these maps are substantially similar to the coverage areas in the nominal load maps. For the uplink, this similarity is partially due to the power control in the LTE device, which serves to effectively mitigate interference across the range of unloaded and loaded scenarios. For both the uplink and downlink, the interference levels for the specified application load profile are not high enough to cause a significant degradation in coverage under load. ~~The sector utilizations associated with these cases are provided in Appendix J.~~

~~Appendix B. BIG-NET DEPLOYMENT SCHEDULE IN GANTT FORMAT~~

~~See following pages.~~

H.2.6 Sector Utilization Information *(confidential)*

[redacted]

H.3 Key Milestone Chart

State of Texas PS LTE Program Milestones, 110211, v8.0	Due Date (if applicable)	Target for Completion	ACTUAL
Launch Region VI PS LTE Network Achitecture Working Group	July-11	7/8/2011	7/8/2011
State of Texas Interop Showing filed with FCC (initial filing)	7/12/2011	7/11/2011	7/11/2011
BIG-Net OTA Test Deployment Phase 1.0 Site Deployment - 6 sites, total of 6 Complete		7/15/2011	7/22/2011
Quarterly Report #5	7/19/2011	7/19/2011	7/18/2011
Region VI Public Safety LTE Interoperability Forum II, Albuquerque, NM		7/21/2011	7/21/2011
State of Texas Interop Showing filed with FCC , revised filing		8/3/2011	8/3/2011
Submit notice of need for PLMN ID to Bureau	5/1/2012	8/20/2011	8/19/2011
Quarterly Report #6	10/19/2011	10/19/2011	10/18/2011
Quarterly Report #7	1/19/2012	1/19/2012	
State of Texas PS LTE Architectural Requirements & Guidelines, v1		2/1/2012	
BIG-Net temporary PLMN ID change-over to permanent PLMN ID		2/1/2012	
Conformance, IOT and End-to-End Validation Plan		3/1/2012	
Quarterly Report #8	4/19/2012	4/19/2012	
Interoperability Monitoring, Issue Tracking and Escalation Service Plan		6/1/2012	
BIG-Net OTA Test Deployment Phase 2.0 - Add 11 sites, total of 17 complete		6/27/2012	
Quarterly Report #9	7/19/2012	7/19/2012	
BIG-Net OTA Test Deployment Phase 2.1 - Add Cell-on-Wheels (CoW), Total of 18 complete		7/20/2012	
Complete Phase 1 Interoperability Testing		7/27/2012	
BIG-Net Date of Service Availability ("Go Live" Date)		**8/1/2012**	
Quarterly Report #10 - 1st Report after Date of Service Availability	10/19/2012	10/19/2012	
Quarterly Report #11	1/19/2013	1/19/2013	