Southern Ohio Health Care Network
October 2011 Quarterly Report for 3rd Quarter of 2011

I. Project Contact & Coordination Information

A. The Southern Ohio Health Care Network (SOHCN) is incorporated as a 501(c)(3). In May 2009, the SOHCN amended its Articles of Incorporation and changed the composition of its Board of Directors as appropriate. The following is the current list of SOHCN board members:

Name	Position	Affiliation
Keith Coleman	President	CFO, Adena Health System
Karen D. Bolton, Esq.	Vice President	General Counsel, Adena Health System
Mark Moffitt	Sec'y/Treasurer	CIO, Adena Health System
Kristine Barr	Member	CIO/VP of Comm., O'Bleness Health System
Morgan Saunders	Member	CIO, Holzer Consolidated Health Systems
Mark Shuter	Member	CEO, Adena Health System

Project Contact/Coordinator for the SOHCN is Tom Reid, President of Reid Consulting Group.

B. Contact information for responsible administrative officials:

Keith Coleman President, Southern Ohio Health Care Network, Inc.
CFO, Adena Health System
272 Hospital Road
Chillicothe, OH 45601
Phone: 740-779-7390
FAX: 740-779-7498
kcoleman@adena.org

Tom Reid, Project Coordinator
President, Reid Consulting Group LLC
340 West State Street
Suite 243
Athens, OH 45701
Phone: 740-590-0076
FAX: 614-448-1718
Tom@ReidConsultingGroup.com

C. The Southern Ohio Health Care Network Inc. Board of Directors is **legally** responsible for the conduct of activities supported by the FCC Rural Health Care Pilot Program (RHCPP) award. As the pilot project's fiduciary agent, Adena Health System is **financially** responsible for the conduct of activities supported by the FCC RHCPP award.

D. In 2008 and early 2009, the staff of Reid Consulting Group (RCG) contacted and/or visited all eligible health care providers (HCPs) in the thirteen (13) Phase I counties to explain the SOHCN project and collect FCC-required letters of agency (LOA) from each. Beginning in 2010 and continuing in 2011, we are contacting all potential SOHCN

members to inform them of Horizon's plans for the fiber build and update their contact information.

The SOHCN has been expanded to include a total of 34 counties. Phase II of the network build will be the 21 remaining counties not included in Phase I. RCG has commenced Phase II field work, beginning to contact and visit the eligible health care facilities to explain the project and collect LOAs.

As stated in our original application, Phase II implementation will necessitate additional rounds of funding for the RHCPP because of the significantly expanded geographic scope of the Southern Ohio Health Care Network.

Coordination with Region:
In April 2008, the Southern Ohio Health Care Network (SOHCN) agreed to merge with Holzer Consolidated Health Systems (HCHS), the other Rural Health Care Pilot Project receiving funding in southeastern Ohio. In August 2008, HCHS and Adena Health System jointly petitioned USAC and the FCC to approve their merger request.

In the final quarter of 2008, the SOHCN board reviewed and offered comments/suggestions on the draft RFP prepared by Reid Consulting Group.

On December 5, 2008, FCC Wireline Competition Bureau Chief Dana R. Shaffer adopted an order accepting the merger request of the HCHS and SOHCN projects. As requested, the order names SOHCN as the successor to the HCHS Pilot Program project.

During the first quarter of 2009, USAC and RCG worked together to review the SOHCN's 465 Package. This often required RCG to act as the liaison between USAC and various SOHCN members to answer USAC's eligibility questions.

Upon successful completion of the 465 review process, the SOHCN's Form 465, 465-Attachment and RFP were posted publicly on March 31, 2009. A mandatory pre-bid web conference was held for all parties interested in responding to the SOHCN RFP on April 10, 2009. The original deadline for RFP responses was May 8, 2009, but upon the request of multiple carriers, that deadline was extended to May 26, 2009.

A scoring retreat was held on May 28, 2009, at the Adena Regional Medical Center. The five-member scoring team discussed and scored the six responses according to the rubric detailed in the RFP. The scoring team included: (1) Adena Manager of Technical Operations Roganne West, (2) Holzer CIO and SOHCN Board Member Morgan Saunders, (3) O'Bleness CIO and SOHCN Board Member Kristine Barr, (4) OARnet Technology Infrastructure Division's Director of Partner Relations Dennis Walsh, and (5) Ohio University Voice & Data Operations Manager Rick Manderick.

The scoring team selected Horizon Telcom to build and operate the SOHCN Phase 1 fiber-optic backbone. Horizon and the SOHCN are currently in contract negotiations to solidify the Master Services Agreement before proceeding with the 466 package. During this

negotiation, Horizon and RCG engineers have conducted site surveys of HCPs that will serve as Points of Presence (POPs) for the SOHCN in anticipation of the build.

RCG uses its SOHCN website, www.sohcn.org, and a SOHCN listserv to periodically update HCPs, carriers, vendors and other stakeholders on the project's progress. On June 10, 2009, the SOHCN widely distributed a press release announcing the Phase I contract award to Horizon. In May of 2011, the SOHCN widely distributed a press release announcing that Fujitsu, Juniper Networks and Calix would be providing electronics for the network.

Coordination with Government:

RCG is in regular contact with USDA Rural Development (both state and federal offices), Governor Strickland's Office of Appalachia, and our region's three ARC local development districts: Ohio Mid-Eastern Governments Association, Buckeye Hills – Hocking Valley Regional Development District, and Ohio Valley Regional Development Commission. All of the above agencies are kept informed of SOHCN's progress.

SOHCN is also in regular contact with the staffs of Rep. Zack Space (OH-18), Rep. Charlie Wilson (OH-6), and Senator Sherrod Brown. All three are adamant that SOHCN's expansion of broadband penetration must benefit not just the health care industry but entire communities throughout our region.

SOHCN has partnered with Congressman Space to advance a set of proposals known as Connecting Appalachia, which will improve health care in our region and deploy broadband infrastructure for economic development and educational purposes.

In February 2009, RCG and SOHCN Board President Marcus Bost travelled to Washington, D.C. for a series of meetings to discuss SOHCN's objectives and progress. We met with representatives from HRSA's Office of Rural Health Policy, FCC's Wireline Competition Bureau, USDA's Rural Development Broadband Division, Congressman Space and Congressman Wilson's offices.

The SOHCN submitted its BTOP/BIP (ARRA broadband programs) proposal for the Connecting Appalachia project on August 20, 2009, which was the final BTOP/BIP deadline for Round One funding applications. In late January 2010, NTIA provided official notification that our Round 1 application was unsuccessful.

In the second and final round of NTIA ARRA funding, Horizon served as the applicant for a revamped middle-mile proposal entitled the Connecting Appalachian Ohio – Middle Mile Consortium (CAO-MMC), one of three integrated, regional BTOP proposals that comprise Ohio's comprehensive plan for a statewide broadband network. The SOHCN is a partner in the CAO-MMC endeavor. In August of 2010, NTIA provided official notification that the application had been successfully awarded.

Collaborations between SOHCN, Reid Consulting Group and Horizon have led to outreach across the 34 county area, engaging healthcare facilities across the region. To date, 42 sites have been contracted through provider Horizon.

Coordination with Technology Community:

Southern Ohio Health Care Network
October 2011 Quarterly Report for 3rd Quarter of 2011

SOHCN's Ohio Academic Resources Network (OARnet, formerly known as OSCnet) liaison is Dennis Walsh, OARnet's Chief Relationship Officer. As stated above, Walsh was an invaluable member of the scoring team that selected the winning bid for SOHCN Phase 1.

More recently, OARnet Executive Director Pankaj Shah has joined SOHCN's Connecting Appalachia management team. SOHCN's partnership with OARnet is invaluable, as OARnet can provide our network with backhaul to Tier 1 NSPs, in-state bandwidth and high-caliber engineering talent as we continue to grow.

Additionally, RCG President Tom Reid participates in a weekly conference call with Internet2 staff, partners and stakeholders. SOHCN understands the importance of staying connected and coordinated with nationwide data networks.

II: List of Health Care Facilities Included in the Network

Please see the attached Excel spreadsheet for a list of participating sites, addresses and all requested information on each.

In addition, an Excel spreadsheet noting all of the sites which have been placed under contract to receive services once the backbone is complete has also been attached.

III. Network Narrative

SOHCN has retained Reid Consulting Group to administer the network design and build. Reid Consulting Group specializes in data network planning, construction and maintenance. President Tom Reid has contracted with a network engineer, and they prepared the RFP and facilitated the carrier selection process.

RCG drafted the following network design narrative which details changes that have been made to SOHCN's original RHCPP proposal over the course of the currently ongoing Master Services Agreement (MSA) negotiation with Horizon Telcom. We will update this narrative upon the completion of contract negotiations.

SOUTHERN OHIO
HEALTH CARE NETWORK

Network Narrative

a. Description of the Backbone

The FCC-funded Southern Ohio Health Care Network (SOHCN) will:

+ Deliver metropolitan-class fiber-based broadband in rural towns and villages, using a dense wave division multiplexing (DWDM) foundation, offering point-to-point (Layer 2) connections ranging in speed from 1

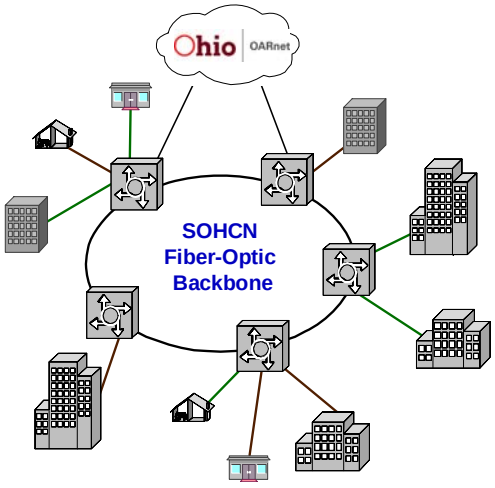

Gbps to 10 Gbps.

- Add a diverse routing core to the DWDM fabric to provide any-to-any (Layer 3) connections ranging in speed from 1.5 Mbps to 1 Gbps.
- Provide high capacity backhaul to Tier 1 Network Service Providers via redundant 10 Gbps DWDM wavelength services provided by the Ohio Academic Resources Network (OARnet).
- Peer with OARnet's Layer 3 network to provide high performance in-state access for urban health care providers, universities and government.

b. How Health Care Providers Will Connect

Physical Considerations

SOHCN will deploy a total of 3 interconnected fiber rings, each benefiting from 100% route diversity (minimum geo-path separation of 100 feet). These rings will provide the foundation for last-mile options in both the fiber-optic and wireless implementations. The POPs, most to be hosted in computer rooms of regional medical centers, will be served by diverse entry to the facility (minimum separation of twenty feet at building entrance).

The 24-strand fiber cables for the trunk routes will allow expansion capacity and provide splice junctions to shorten the distance of last-mile fiber runs to smaller facilities and network-to-network interconnection links. A large majority of the fiber runs for SOHCN will be aerial, attached to existing power poles. Current state-of-the-art cable construction and suspension practices make aerial fiber as reliable as buried cable, while dramatically speeding installation and simplifying right-of-way processes.

III. Network Narrative
(continued)

Southern Ohio Health Care Network
October 2011 Quarterly Report for 3rd Quarter of 2011

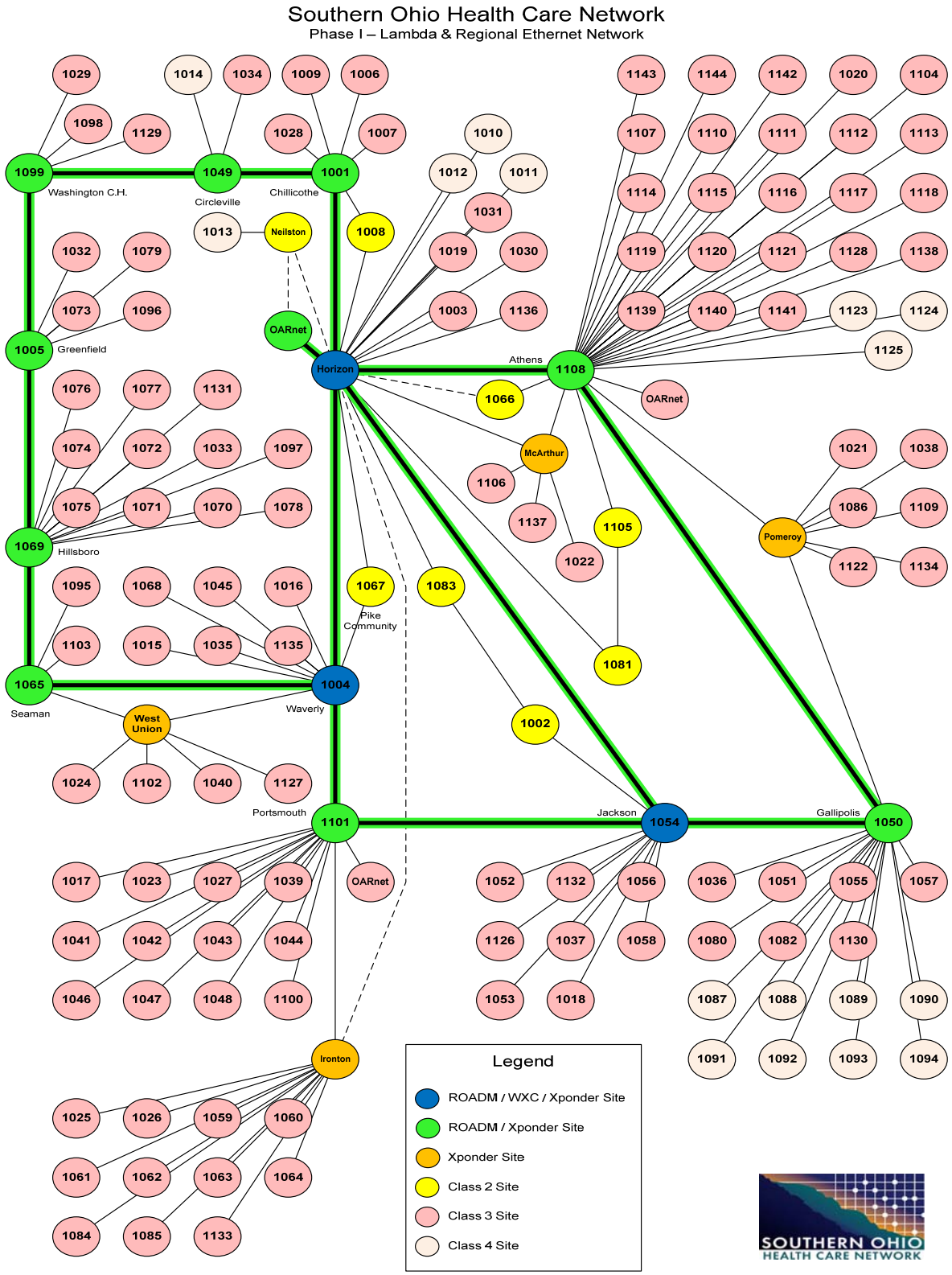

III. Network Narrative (continued)

Layer 2 Design

SOHCN will use Cisco equipment to light the fiber rings with fully redundant 40-channel DWDM-15454 components. Reconfigurable optical add/drop multiplexing (ROADM) hardware in each POP will provide a flexible optical fabric across all of the rings. Cisco's Crossponder technology will extend the Ethernet core over the DWDM network to every POP. The Crossponders integrate a 20-port Gigabit switch with dual DWDM uplinks, which we will connect to separate lambdas to increase capacity and improve reliability. The network will deliver point-to-point (Layer 2) fiber-optic connections ranging in speed from 1 Gbps to 10 Gbps (and will support future 40 Gbps links).

Southern Ohio Health Care Network
Phase I

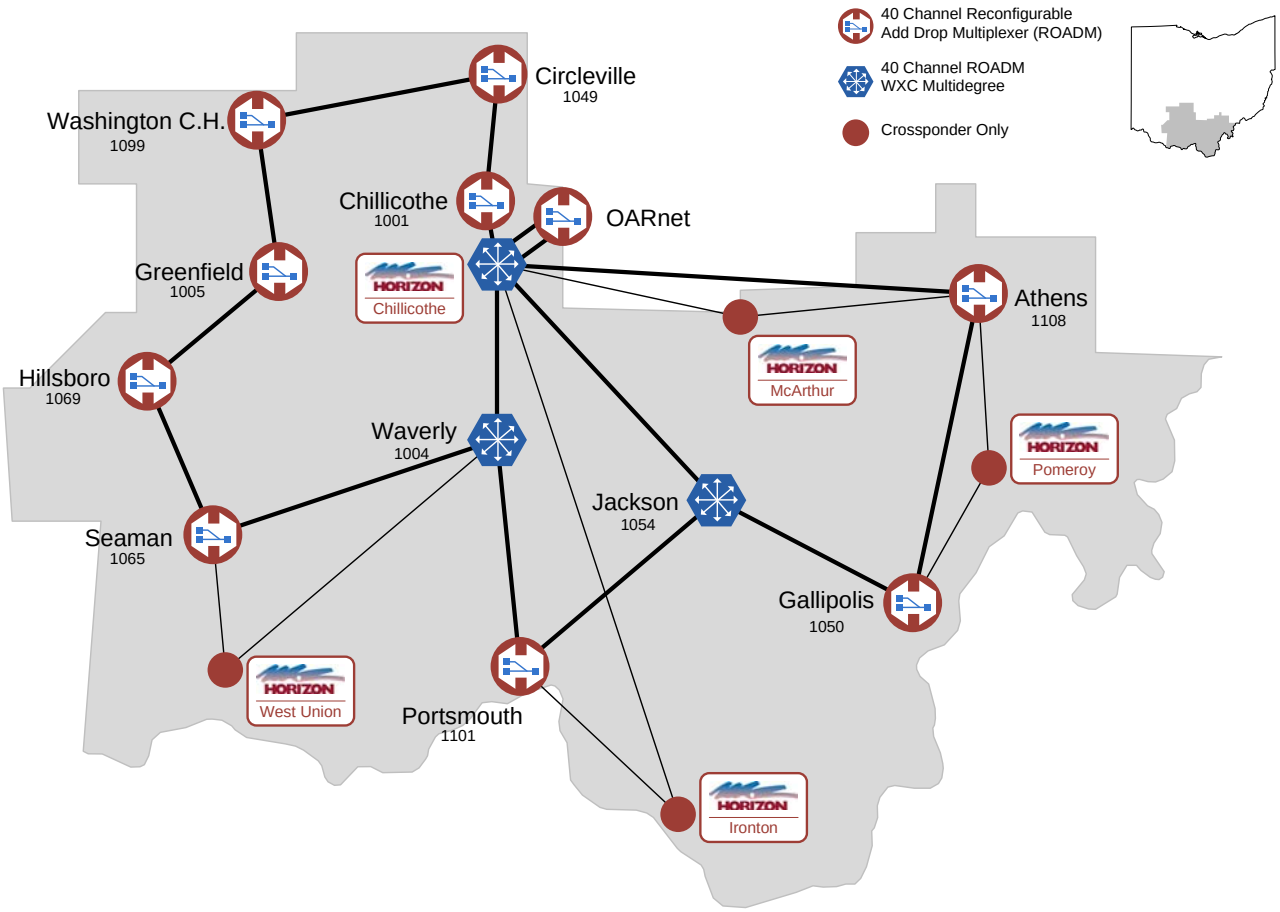

III. Network Narrative (continued)

Layer 3 Design

To provide any-to-any (Layer 3) services, we will deploy geographically dispersed and redundant Cisco 7609-S routers to provide any-to-any (Layer 3) fiber-optic connections ranging in speed from 1.5 Mbps to 1 Gbps. As traffic increases, additional router cores will be added to support the growth, maintaining both low latency and high packet delivery rates. Rates for service will anticipate the need for future growth in capacity and lifecycle replacement requirements.

Crossponder Flexibility

The innovative crossponder technology features dual lambda interconnection, providing 0% oversubscription in our load profiles. Interconnected to the routers and the DWDM fabric, the crossponders can provide 1 Gbps Layer 2 or Layer 3 services.

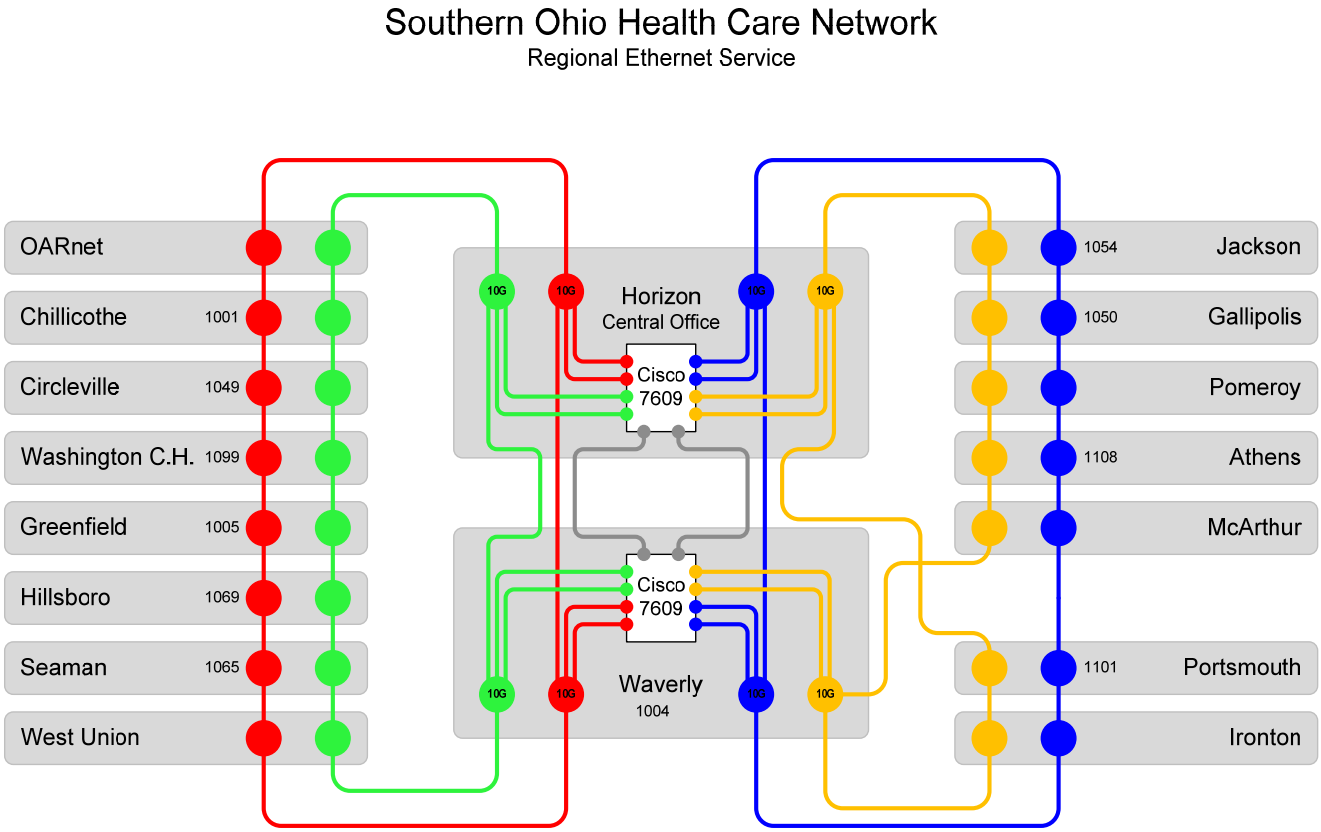

III. Network Narrative (continued)

c. Connection to a National Backbone

The SOHCN will connect to the Ohio Academic Resources Network (OARnet) in at least two locations, Chillicothe and Athens, at speeds of up to 2.5 Gbps. OARnet will provide high-speed in-state connectivity to urban health centers and universities. OARnet is also Ohio's regional connector for Internet2. The membership of the SOHCN, though, has not yet committed to joining Internet2 due to the associated ongoing costs. Deliberations continue among the members regarding the cost-benefit analysis of Internet2 membership. As Internet2 continues to demonstrate its value and barriers to inter-state medical cooperation decrease, we believe the membership will opt to join Internet2.

d. Number of Miles of Fiber to be Constructed

The SOHCN will purchase Indefeasible Rights to Use (IRU) on both newly installed fiber and existing fiber. The fiber assets will include backbone and last mile connections. We are currently working with Horizon to create the completed list of fiber assets that will provide a detailed inventory.

e. Network Management and Maintenance

Under a Master Services Agreement with the SOHCN, Horizon will manage the entire network. The SOHCN will have read-only access into the management tools to verify compliance with all performance requirements as defined in the Horizon RFP response.

IV. List of Connected Health Care Providers

The Following sites are operational on the SOHCN network. Additionally, there are signed contracts for service once the network is lit. This list is attached in the form of an Excel spreadsheet.

Adena Regional Medical Center
Adena Urgent Care - Jackson
Adena Home Care Services
Adena Urgent Care - Waverly
Greenfield Area Medical Center
Adena Urgent Care - Chillicothe
Adena Rehabilitation & Wellness Center
Adena Oak Hill
Adena Pickaway Ross
Adena Circleville
River Trace - Walmart
Adena Family Medicine & Pediatrics - Jackson
Family Health Clinic - Ross County
Family Health Clinic - Athens County
Family Health Clinic - Meigs County
Family Health Clinic - Vinton County

Family Health Clinic - Nelsonville
Gallia Office
Jackson Outpatient Clinic
Berger Health System
Laurelville
Holzer Medical Center
The Medical Plaza
Dental Health Partners
Jenkins Memorial Health Clinic
Holzer Medical Center - Jackson
Holzer Assisted Living - Gallipolis
Holzer Assisted Living - Jackson
Holzer Clinic Athens
Holzer Clinic Jackson
Holzer Clinic Meigs
Holzer Clinic (SSC)
Holzer Clinic Albany
Holzer Clinic Data Center
Holzer Home Care Pomeroy
Holzer Senior Care
O'Bleness Memorial Hospital
Meigs Medical Clinic
Albany Medical Clinic

V. Non-Recurring and Recurring Costs

Under the MSA negotiated by SOHCN and Horizon Telcom, FCC RHCPP funding and the required 15% match will not be used for any recurring costs. SOHCN member facilities will be responsible for paying all recurring costs of their connectivity to the network, but these monthly service rates will be greatly reduced from standard commercial rates because of the capital buydown made possible by the SOHCN paying for its fiber infrastructure upfront. The vast majority of the RHCPP award and match will be used to purchase Indefeasible Rights to Use (IRU) both newly installed fiber and existing fiber. The fiber assets will include the SOHCN backbone and all last mile connections to eligible HCPs.

No actual RHCPP eligible costs have been incurred this fiscal quarter or yet this funding year. Here are the **budgeted, non-recurring** costs we will be using RHCPP funds and match to cover, broken down by each of the seven expense categories listed in paragraph 5 of Appendix D of the *2007 RHC Pilot Program Selection Order*:

a. Network Design: $0

b. Network Equipment, including engineering and installation: $0

c. Infrastructure Deployment/Outside Plant

i. Engineering: $0

ii. Construction: $18.4 Million to purchase fiber IRUs with 20-year term plus 10-year renewal option for $1.

d. Internet1, NLR, or Public Internet Connection: $0

e. Leased Facilities or Tariffed Services: $0

f. Network Management, Maintenance, and Operation Costs (not captured elsewhere): $0

g. Other Non-Recurring and Recurring Costs: $0

VI. Apportioned Costs & Funding Sources to Pay Them

SOHCN will not be able to initiate the process of apportioning costs until the Master Services Agreement with Horizon has been finalized. However, here are preliminary responses broken down by required response sections (a) – (d):

a. Explain how costs are identified, allocated among, and apportioned to both eligible and ineligible network participants.

As explained in Section V above, RHCPP funds and match will be used to purchase all SOHCN fiber infrastructure. The fiber IRU documentation will list each fiber link described by: facility served; distance of fiber run, type of fiber, year installed (if fiber already exists), strand count included in IRU, dollar value for the fiber run.

SOHCN members' recurring, monthly service charges for connectivity are identified in the rate tables found in Horizon Telcom's RFP response. There are different rate table for eligible and ineligible entities.

Each SOHCN member will decide which speed/level of service to subscribe to based on the facility's needs and budget. The HCP will then pay the monthly charge indicated on its respective Horizon rate table. In addition, each SOHCN member will be charged a 7% monthly membership surcharge as detailed below in (b).

b. Describe the source of funds from:

i. Eligible Pilot Program network participants: Each participant's monthly connectivity cost will be identified and apportioned as described above. It will be paid directly to Horizon, and will presumably come from the health care facility's operating budget. In addition, the participant will pay a 7% SOHCN Membership Monthly Surcharge; this fee will be put toward paying off Adena's $2.78M loan to the SOHCN for the RHCPP's required 15% match. For example, if an eligible participant decides it needs a 100 Mbps connection, the Horizon rate table lists the monthly cost as $666.67, which means the facility's SOHCN membership monthly surcharge will be $46.67.

ii. Ineligible Pilot Program network participants: Ineligible participants will identify their monthly cost as outlined above using Horizon's rate table for ineligible sites. These monthly rates are higher than those for eligible sites, and ineligible sites must also pay last-mile fiber installation

costs. Ineligible sites must also pay the 7% SOHCN Membership Monthly Surcharge detailed above. Again, presumably, these funds will come from the HCP's operating budget.

c. **Show contributions from all other sources:** The SOHCN fiduciary agent, Adena Health System, has contributed more than $481,446 to date for project costs not covered by the RHCPP fund and match. These costs include project management, RFP creation and the ensuing bidding process, as well as member outreach and supplying public information.

   Adena has also agreed to loan the SOHCN the $2.78M match required by the RHCPP because financial hardship in our economically distressed region of Appalachia precluded individual members from being able to contribute their share of the 15% match.

   i. **Identify source of financial support and anticipated revenues that is paying for costs not covered by the fund and by Pilot Program participants:** Adena is the largest regional health system in SOHCN Phase I. Despite severe economic instability nationwide, Adena has been able to maintain its financial stability and posted a net revenue of $293 million last year. Adena supports the SOHCN because it believes increased collaboration and economic development in our region will help Adena grow and remain financially healthy.

      The 7% SOHCN Membership Monthly Surcharge will eventually enable Adena to recoup its $2.78 million loan to the SOHCN to pay the RHCPP-required 15% match.

   ii. **Identify the respective amounts and remaining time for such assistance:** SOHCN's current financial projections estimate that the SOHCN will be self-sustaining by the end of 2011. Until then, Adena has budgeted to cover the remaining SOHCN implementation tasks through Dec. 2010.

d. **Explain how the selected participant's minimum 15% contribution is helping to achieve both the selected participant's identified goals and objectives and the overarching goals of the Pilot Program:** The SOHCN's 15% match contribution is just as important to the success of the project as its $15.76 million RHCPP award. Both are necessary to procure the 20-year fiber IRUs that constitute the Southern Ohio Health Care Network backbone and last-mile connections. This critical infrastructure will allow us to achieve the goals we share with the Pilot Program: a robust regional broadband health care network that supports electronic health records, telemedicine, continuing medical education via distance learning, and ties into the National Health Information Network being developed by HHS.

VII. Requirements & Procedures Necessary for Ineligible Entities' Network Participation

All ineligible sites listed in Section II are owned by or in some way affiliated with SOHCN's eligible agencies. Ineligible sites have only been included in the SOHCN because they are integral to the operation of regional health care agencies made up mostly

of RHCPP-eligible facilities. Horizon has offered to provide the last-mile fiber connections to these sites at no cost if they elect to subscribe to SOHCN services in the first six months that services are available at a given location. Horizon makes this offer in order to generate early revenues, as an incentive for these sites to link to the network.

VIII. Updates to Project Management Plan

A. As stated above, during the second quarter of 2008, the Southern Ohio Health Care Network was incorporated as a 501(c)(3). SOHCN formed a Board of Directors and elected officers.

In the fourth quarter of 2008, the FCC approved the merger request of the Southern Ohio Health Care Network and Holzer Consolidated Health Systems. The resulting joint project will fulfill the objectives stated in **both** original funding proposals.

There were no changes to the project's management structure made in the first quarter of 2009. In the second quarter of 2009, the SOHCN bylaws were amended and the Board of Directors composition was altered accordingly (See Section I. A. of this report.). No additional changes were made in the third or fourth quarters of 2009. In the first quarter of 2010, a SOHCN Board annual meeting included officer elections (See Section I. A. of this report for results.). There were no changes made to the project management plan or leadership in the second quarter of 2010. There were no changes made to the project management plan or leadership in the third quarter of 2010. There were no changes made to the project management plan or leadership in the fourth quarter of 2010. There were no changes made to the project management plan or leadership in the first quarter of 2011.

B. Project Plan/Schedule
In previous quarterly reports we have included the schedule for SOHCN Phase 2 development. However, when SOHCN completed the bid process for Phase 1 during the second quarter of 2009, we learned definitively that Phase 2 will require a second round of RHCPP funding. Since that time, we have reconfigured our project work plan and schedule to only include the remaining benchmarks for Phase 1 completion.

Year:	**Quarter:**	**Objectives**
2010	3rd	Completed Contract Negotiations w/Horizon
2010	3rd	Completed & Post 466 Package
2010	3rd	Implemented Phase 1 network build
2010	4th	Phase I network build continued
2011	1st	Phase I network build continued FCL obtained First Invoice submitted for sites contracted/IRU agreements accepted
2011	2nd	Chillicothe Rings Operational and Fully Redundant Adena Facilities Operational Adena Data Replication Link Available

		Chillicothe OARnet POP Interconnected OARnet Peering Arrangements Established South Ring Operational Jackson Ring Operational O'Bleness Memorial Hospital Operational via Temporary Ring Existing O'Bleness HS Network Interconnected Existing Holzer HS Network Interconnected Existing Holzer Clinic Network Interconnected Existing SOMC Network Interconnected All Peering Arrangements Established Participating Ross County Class 3 Facilities Connected
2011	3rd	Jackson Ring Fully Redundant Holzer Medical Center – Gallipolis Operational Berger Hospital Operational Fayette Memorial Hospital Operational Existing Berger HS Network Interconnected
2011	4th	East Ring Operational and Fully Redundant South Ring Fully Redundant Holzer Data Replication Link Available Athens Local Ring Operational and Fully Redundant Nelsonville Doctor's Hospital Operational All Other OARnet POPs Interconnected (As Desired)
2012	1st	Highland District Hospital Operational Adams County Regional Medical Center Operational Ironton Fiber Route Completed 25% of Class 3 and 4 Facilities Connected
2012	2nd	West Ring Operational and Fully Redundant 50% of Class 3 and 4 Facilities Connected
2012	3rd	All Participating Class 3 and 4 Facilities Operational

Explanation of Missed Milestones & Delay Between Contract Award and 466 Filing:

In previous quarterly reports, we stated a goal of having contract negotiations completed with Horizon Telcom and posting the 466A Package by the end of June 2010. Contract negotiations have proven more complex than anticipated, and as the SOHCN fiduciary agent, Adena Health System is painstakingly creating a business plan to ensure the network's sustainability. The Adena finance team has been in consultation with several financial advisors, accountants and others to devise the best method for handling the impact

of SOHCN asset depreciation on SOHCN's income statement and balance sheet. Horizon and SOHCN have also taken this time to carefully negotiate the fiber-optic backbone's IRU values, terms and conditions.

Though contract negotiations and financial planning have taken longer than we expected, the complexities of obtaining a feasible source for the $2.78 million match presented a serious obstacle to our project's progress. While we had been pursuing many avenues to attain the required 15% match since the FCC notified SOHCN of its RHCPP award, we did not know how desperate the economic situation would become as a result of the global financial crisis that began in 2008. However, the Adena Board of Directors approved its Finance Committee's recommendation to lend the SOHCN the required match funds, so we should be able to progress on this front without further delay.

We narrowly missed our self-imposed deadline for completion of contract negotiation stated in the last quarterly report and have executed all elements of the contract between SOHCN and Horizon during the third quarter of this year. The MSA and 466 package have been filed and accepted.

In the first quarter of 2011, the FCL was issued. We have also issued, and had accepted, the first invoice. Fiber has been built to a number of facilities represented by the three SOHCN entities and we expect to show data transmissions for those facilities in the second quarterly report for 2011.

IX. Network's Self-Sustainability

With the expectation completion of contract negotiations and filing our 466A, Reid Consulting Group has prepared the attached (accepted) SOHCN Sustainability Plan. It has been included in our 466A package. This sustainability plan details SOHCN members' monthly recurring cost savings over the course of the next ten years.

X. Network's Role in Advancing Telemedicine

Given that our network has yet to be built, we have not had a measurable impact on telemedicine in our part of the state. However, in late September 2008, we were notified that our proposal to the USDA Rural Development's Distance Learning & Telemedicine program was successful. The $277,695 grant award (with an additional 15% match from applicant Adena) will provide four SOHCN health care facilities in our poorest, most rural areas with telemedicine equipment and training. We submitted a 2009 USDA DLT proposal this March and were informed in early October 2009 that it too will receive funding. The 2009 award provides an additional $226,467 in USDA Rural Development funds to bring telemedicine equipment to eight more SOHCN sites. When our RHCPP project is completed, these 12 HCPs will have the fiber bandwidth they need to participate in cutting-edge telemedicine with HD videoconferencing.

XI. Compliance with HHS Health IT Initiatives

We have not completed the network build yet. However, all network architecture plans made to date comply with all HHS initiatives and interoperability standards in order to

support the creation of the Nationwide Health Information Network. The SOHCN is designed as a standards-based network with open architecture that allows peering to multiple Tier 1 service providers.

When the SOHCN is fully operational, it will be a tremendous support for our fledgling RHIO, the Appalachian Health Information Exchange (AHIE). AHIE has been floundering without broadband connectivity in Southern Ohio. The SOHCN will provide for sharing of electronic health records and public health information regionally, and it will peer with OARnet's Layer 3 network to provide high-performance in-state access to urban health care providers, universities and government.

XII. Coordination with HHS in Public Health Emergencies

When the SOHCN is fully operational, it will provide – for the first time in Appalachian Ohio – a high-capacity, fully redundant fiber-optic infrastructure allowing our region's health care providers to take part in a nationally orchestrated response to health emergencies. The SOHCN's physical fiber route diversity and disaster recovery data replication links make the network a reliable and dependable source of connectivity even in times of crisis and natural disasters.

The SOHCN will provide broadband connectivity to all health departments in our service area, which is critical as health departments provide the first line of defense during public health emergencies. In addition, the uniform telemedicine equipment packages, videoconferencing, and web-based synchronous and asynchronous (featuring persistent virtual rooms) communication capabilities being funded by USDA Distance Learning & Telemedicine projects will run on SOHCN connectivity and further equip medical personnel to coordinate emergency responses.

At the heart of the SOHCN, Adena's PACCAR Medical Education Center (www.adenapaccar.com) continues to perform groundbreaking health care quality research that, when disseminated to SOHCN members via the network's broadband connectivity, will improve our region's ability to effectively respond to public health emergencies. While we hope to never encounter public health emergencies in our region, we are confident that the connectivity an operational SOHCN will provide our participating health care facilities will enable them to fully cooperate with HHS and its Centers for Disease Control and Prevention in any crisis.