NATIONAL TELECOMMUNICATIONS COOPERATIVE ASSOCIATION
The Voice of Rural Telecommunications
www.ntca.org

February 9, 2012

***Ex Parte* Notice**

Ms. Marlene H. Dortch, Secretary
Federal Communications Commission
445 12th Street, S.W.
Washington, D.C. 20554

***Connect America Fund*, WC Docket No. 10-90; *A National Broadband Plan for Our Future*, GN Docket No. 09-51; *Establishing Just and Reasonable Rates for Local Exchange Carriers*, WC Docket No. 07-135; *High-Cost Universal Service Support*, WC Docket No. 05-337; *Developing an Unified Intercarrier Compensation Regime*, CC Docket No. 01-92; *Federal-State Joint Board on Universal Service*, CC Docket No. 96-45**

Dear Ms. Dortch:

On Tuesday, February 7, 2012, the undersigned, on behalf of the National Telecommunications Cooperative Association ("NTCA"), together with Richard Coit of the South Dakota Telecommunications Association, Larry Thompson of Vantage Point Solutions, and Mark Shlanta and Joseph Neubauer of SDN Communications, met separately with: (1) Angela Kronenberg, Wireline Legal Advisor to Commissioner Mignon Clyburn; and (2) Michael Steffen, Legal Advisor to Chairman Julius Genachowski, Rebekah Goodheart (via telephone), Randy Clarke, and Victoria Goldberg of the Wireline Competition Bureau, and Peter Trachtenberg of the Wireless Telecommunications Bureau to discuss various difficulties associated with the implementation of intraMTA local calling from Commercial Mobile Radio Service ("CMRS") carriers to Local Exchange Carriers ("LECs") in the specific and narrow instances where such calls are routed through interexchange carriers ("IXCs"), as well as routing difficulties and customer confusion associated with intraMTA calls from a LEC to a CMRS carrier. The materials we provided in each meeting are attached hereto.

As we explained in each meeting, it is not technically feasible to implement a "bill-and-keep" intercarrier compensation ("ICC") regime by July 1, 2012 with respect specifically to IXC-routed intraMTA calls between LECs and CMRS providers. Numerous operational, financial, and call rating and routing issues will arise for LECs, CMRS providers, IXCs, and consumers if such implementation is required. Some of the most significant specific concerns with respect to each call flow (CMRS-to-LEC and LEC-to-CMRS. respectively) are outlined below, and the concerns are explained in greater detail in the materials attached hereto.

***Mobile-to-Land Calls*.** As the attached materials show at slides 8 and 9, there are three ways in which a mobile-to-land call can be physically routed between a CMRS provider and a LEC: (1) direct local interconnection; (2) indirect local interconnection (*i.e.*, transit); and (3) indirect interconnection through an IXC. In the case of a call placed by a CMRS customer to a landline customer in the same MTA, we explained that it would be possible to implement the Commission's new ICC regime as of July 1, 2012 – *but only if the CMRS provider obtains local interconnection (i.e., Options 1 or 2) for the exchange of that traffic*. However, where the CMRS provider chooses not to interconnect directly or indirectly on a local basis with the LEC, and chooses of its own accord instead to send intraMTA traffic through an IXC to the LEC (Option 3), there is simply no possible means to distinguish such intraMTA CMRS traffic from all other kinds of traffic (*e.g.*, VoIP, other landline, interMTA CMRS) that are being delivered by the same IXC.

We also explained that while "factors" might at times be used as a fallback for unidentifiable traffic on access facilities, factors will be of no help in this specific case. As shown in slides 11 and 12 of the attached presentation, any factor that an IXC could give would be entirely arbitrary and pulled from thin air, as the IXC itself would have no visibility whatsoever into whether any given call on its network originated on a CMRS device physically located within the same MTA as the landline customer to which the call would be terminating. Moreover, the LEC would have no means of auditing any IXC's claims with respect to intraMTA traffic, as rapid changes in least-cost routing patterns, customer locations, and number porting would all but erase any possible "paper trail." Even if a factor could be determined using traffic analysis, the rapidly changing nature of the traffic due to the aforementioned reasons would render this factor useless for future billing periods. We also noted that certain signaling and systems changes might ultimately help enable migration to the mandated regime even with respect to IXC-routed intraMTA traffic – but, interestingly, the Federal Communications Commission (the "Commission") affirmatively refused in the same Order to mandate some of these needed signaling changes in the context of phantom traffic precisely because of "certain complexities related to such a requirement" that were "best resolved by industry standard setting bodies." *Order*, at ¶¶ 727-728.

Thus, even if NTCA and other representatives do not agree generally with the ICC regime adopted in the Order, we highlighted that there are several workable routes by which a CMRS provider might avail itself of that regime with respect to intraMTA traffic. But when the CMRS provider affirmatively chooses *not* to avail itself of either direct or indirect local interconnection and instead contracts with (and presumably pays) an IXC to terminate the call to a LEC, the CMRS provider has literally and unilaterally elected a different path for call delivery, and the Commission should confirm that the IXC handling that traffic is then required to pay the terminating LEC pursuant to tariff for the LEC's access facilities it orders and uses.

***Land-to-Mobile Calls*.** As the attached materials show at slides 16 and 17, complications will also arise in the context of long-distance-dialed calls that originate on a landline and terminate to a wireless device within the same MTA. As the Commission is well aware, calls are rated and routed based upon the calling plan chosen by the originating carrier's customer. Thus, if a LEC customer dials a 1+ call to a CMRS phone number that is 2 states away but happens to be located within the same MTA, that call is rated and routed as a long distance call today. Similarly, if a LEC customer dials to a CMRS phone number associated with the same local calling area, that call is rated and routed as a local call.

This is true regardless of the mobile nature of the CMRS customer, and it is not merely a "rural" issue. Consider, for example, the case of a woman who lives in Washington, DC and subscribes to Verizon phone service at home. Assume further that woman calls her brother, who has a Chicago-based number for his AT&T Wireless CMRS device. Today, if the sister were to call her brother on his cell phone, that call would be handled as a long distance call regardless of whether the brother was standing on a street in Washington or Chicago. But under the Commission's new rule, to ensure that it does or does not bill the presubscribed IXC correctly, Verizon on the originating end would now apparently need to know for each and every call placed from any of its customers: (a) whether the call was being placed to a CMRS phone; and (b) whether the called CMRS customer in question happens to be within the same MTA or not at the exact moment the call was placed.

Without both pieces of information, Verizon could not know whether the sister's call to her brother was in fact intraMTA (and thus free to the IXC) or just another IXC-routed call that is subject to originating access charges. These two pieces of information are not available to LECs today, and it is difficult, if not impossible, to foresee a time when CMRS providers will supply unaffiliated LECs with free access to their databases to see in real time if a given called CMRS customer happens to be physically located in the same MTA at that moment. Moreover, no carrier today does a dip on every call placed to determine if the called number happens to be associated with a CMRS service, and the one-time and ongoing costs of doing so would be substantial. Finally, it is not clear what effect this rule will have on state jurisdiction over retail local calling areas, nor it is clear how consumers will react upon finding that local and toll calls are no longer easily decipherable. The Commission should therefore confirm that outbound landline calls will continue to be rated and routed pursuant to the consumer's chosen local calling plan pending development of systems and signaling upgrades not currently available in the industry.

Pursuant to Section 1.1206 of the Commission's rules, a copy of this letter is being filed via ECFS with your office. A copy of the materials presented in each meeting is submitted herewith.

If you have any questions, please do not hesitate to contact me at (703) 351-2016 or mromano@ntca.org.

Sincerely,

/s/ Michael R. Romano
Michael R. Romano
Senior Vice President - Policy

Enclosures

cc: Angela Kronenberg
Michael Steffen
Rebekah Goodheart
Randy Clarke
Victoria Goldberg
Peter Trachtenberg

IntraMTA ExParte

SDN Communications
and
South Dakota Telecommunications Association

SDN COMMUNICATIONS

SDTA
South Dakota Telecommunications Association
Rural roots, global connections.

SDN Communications (SDN)

- Formed in 1989 - provides Centralized Equal Access (CEA)
  - Biggest fiber optic network in the region
- SDN provides
  - Regional telecommunications network
  - Broadband peering point
  - Internet aggregation
  - High-speed backbone and last mile connectivity
  - Originating and terminating tandem service
  - Transiting service for CMRS traffic
- Owned by 17 member companies
  - Many are SDTA member companies
- Member of multi-state network consortiums

SDN COMMUNICATIONS

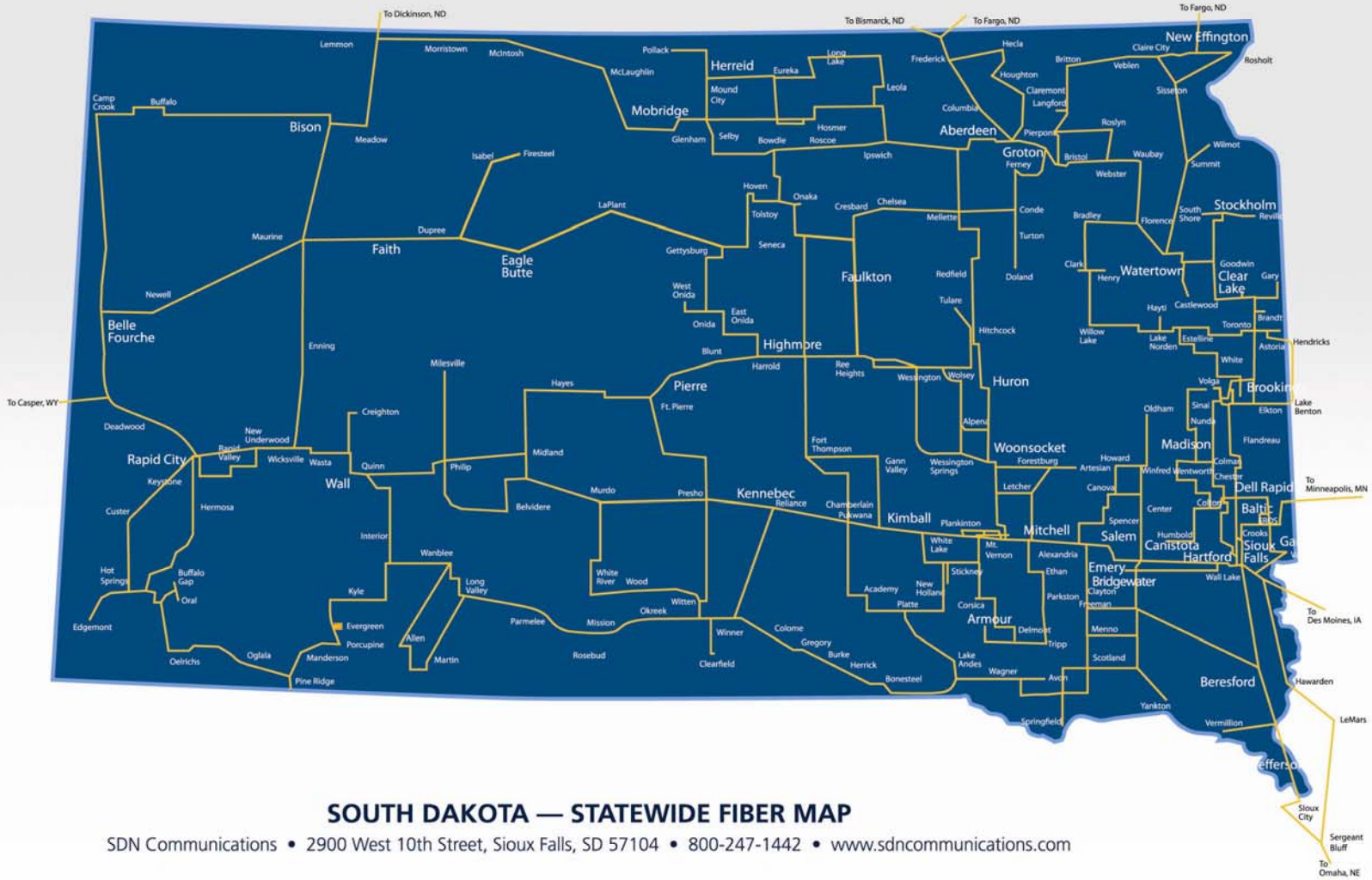

SOUTH DAKOTA — STATEWIDE FIBER MAP

SDN Communications • 2900 West 10th Street, Sioux Falls, SD 57104 • 800-247-1442 • www.sdncommunications.com

South Dakota Telecommunications Association (SDTA)

- 25 incumbent local exchange carriers
  - Cooperatives, privately-owned, municipals, and one tribal
  - Serve approx. 130,000 access lines
  - Employ in excess of 1,200 workers in SD (includes affiliates)
- Mostly serve small towns and rural areas
  - Serve approx. 80% of South Dakota
    - Service areas cover more than 62,000 square miles
  - Population density of areas served: approx. 3 people/sq. mile
    - 11 counties have less than 2 people/sq. mile
  - Own more than 22,000 miles of buried fiber optic line
- Supply broadband services
  - Fiber in more than 300 communities
    - Most with populations of less than 1,000
  - Provide wireless broadband in select areas

South Dakota Telecommunications Companies Service Area Map

N

- Alliance Communications Cooperative, Inc.
  - Hills Telephone
  - Splitrock Properties
- Beresford Municipal Telephone Company
- Cheyenne River Sioux Tribe Telephone Authority
- Consolidated Telephone Company
- Faith Municipal Telephone Company
- Fort Randall /Mt. Rushmore Telephone Company
- Golden West Telecommunications
- Interstate Telecommunications Cooperative, Inc.
  - Stockholm-Strandburg Telephone Co.
- James Valley Telecommunications
- Kennebec Telephone Company, Inc.
- Knology Community Telephone
- Long Lines
- Midstate Communications
- Roberts Co. Telephone Cooperative / RC Comm.
- Santel Communications Cooperative
- Swiftel Communications
- TrioTel Communications, Inc.
- Valley Telecommunications Cooperative
- Venture Communications Cooperative
  - Western Telephone Company
- West River Cooperative Telephone Company
- West River Telecommunications Cooperative
- Nonmember Telecommunications Companies
  - CenturyLink
  - Other Companies

Published 2011

Map Services Provided By: Vantage Point

SDTA South Dakota Telecommunications Association

SDATC South Dakota Association of Telephone Cooperatives

Summary

- Mobile to Land Issues
  - RLECs unable to bill all intraMTA CMRS traffic as local unless:
    - CMRS carriers route traffic properly over access and local trunks
    - Signaling is enhanced allowing determination of CMRS customer location
    - Solution based merely on reporting of factors is not practical
- Land to Mobile Issues
  - RLEC unable to route all wireline originating intraMTA calls as local because:
    - Routing of such calls today is based on State established wireline local calling areas
    - Network switching and signaling does not allow for such routing

Billing System Operations

Data Sources

SS7 Network
Telecom Switches
Industry Tables
Internal Systems

Derived Data From SS7 and Switches Pertinent to CMRS

Calling Party Number
Called Party Number
Charge to Number
LRN
JIP
Originating TG
Terminating TG
Call Date and Time
Elapsed Conversation Time
Carrier Identification Code
Routing Indicators
Timing Indicators

Derived Data For Billing (Based on Rate Center of Phone Number)

City
State
OCN
LATA
Jurisdiction
Call Classifications
Billing Carrier Identification Code
Carrier Identification Code for Access
OCN of non-IXC Interconnecting Carrier
End User Billing Info
Carrier Access Billing Info

Necessary Data for Billing Based on CMRS Location

Type of Carrier Field
CMRS or Non-CMRS

Mobile to Land - MTA location
Orig party at the start of the call

Land to Mobile - MTA location
Term party at the start of the call

Mobile to Land
Use of IXC/Access Trunks

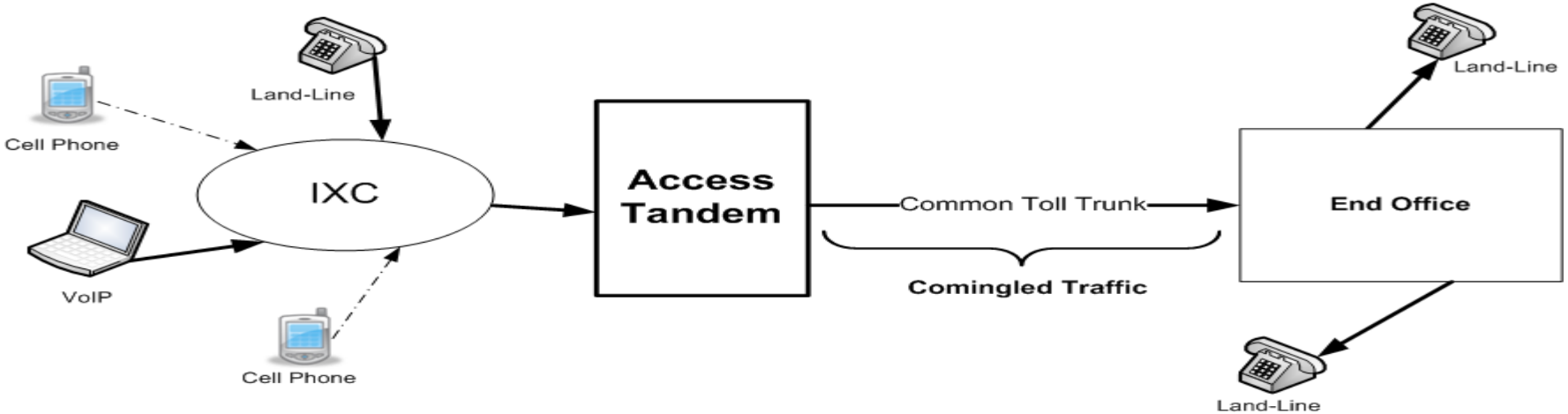

- Traffic received on toll trunks billed as access to the IXC
  - Limited information received in the call record regarding customer that originated the call
  - Information received is not sufficient to properly bill CMRS provider
    - No location or MTA information is provided

Mobile to Land
Use of Local Trunks

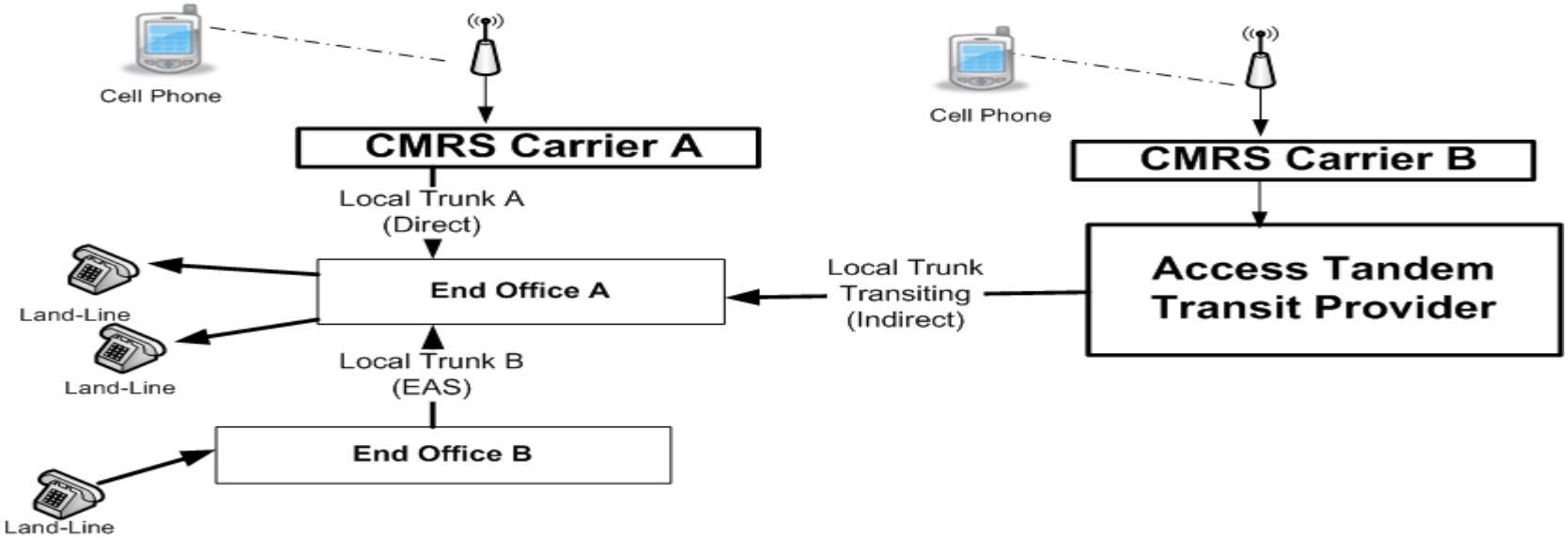

- Traffic received on local trunks billed as local to the carrier
  - Limited information received in the call record regarding customer that originated the call
  - Information received is not sufficient to properly bill CMRS provider

Mobile to Land
Traffic Billed Based on Routing

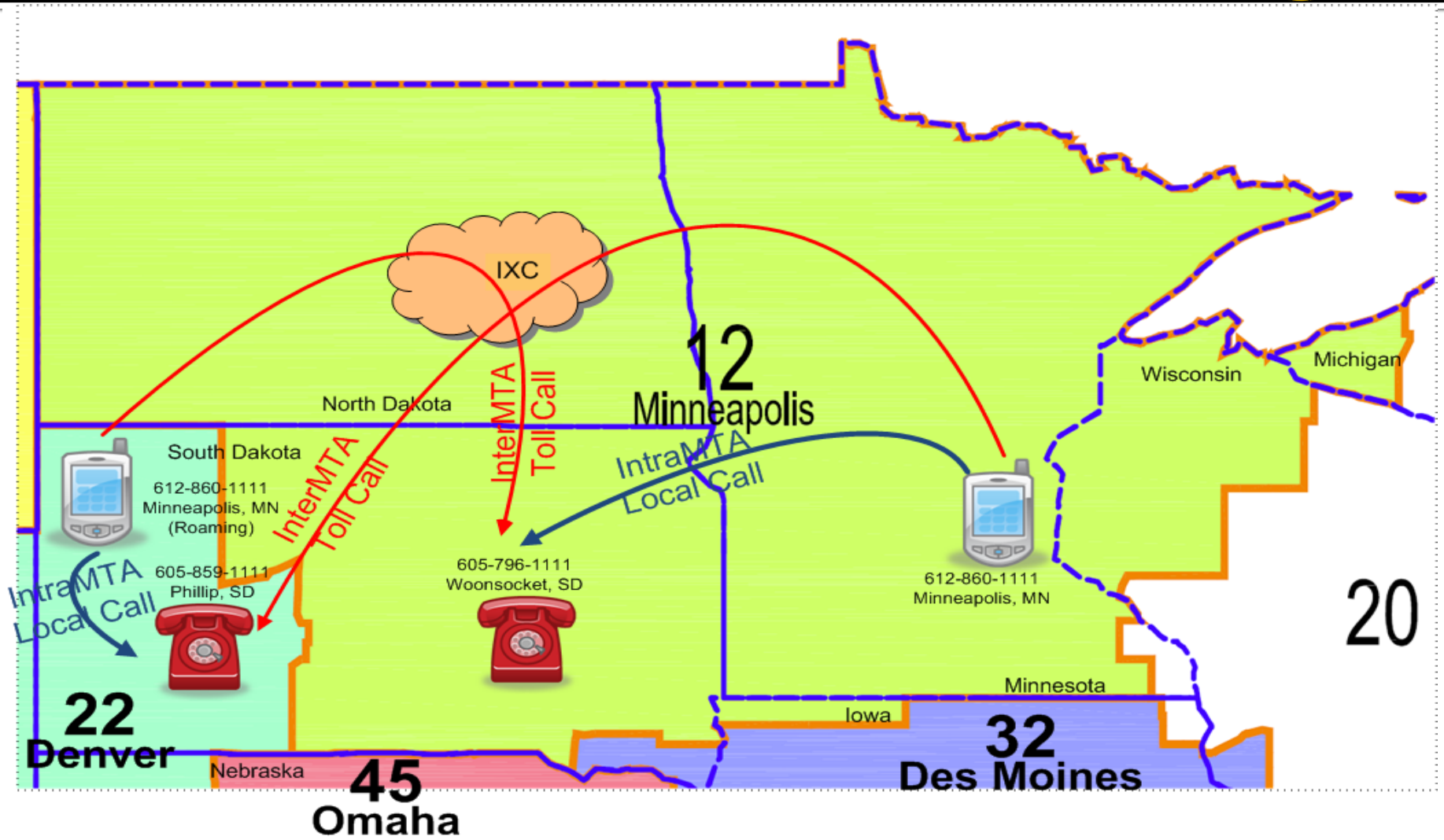

Mobile to Land
Proposed Use of Factors

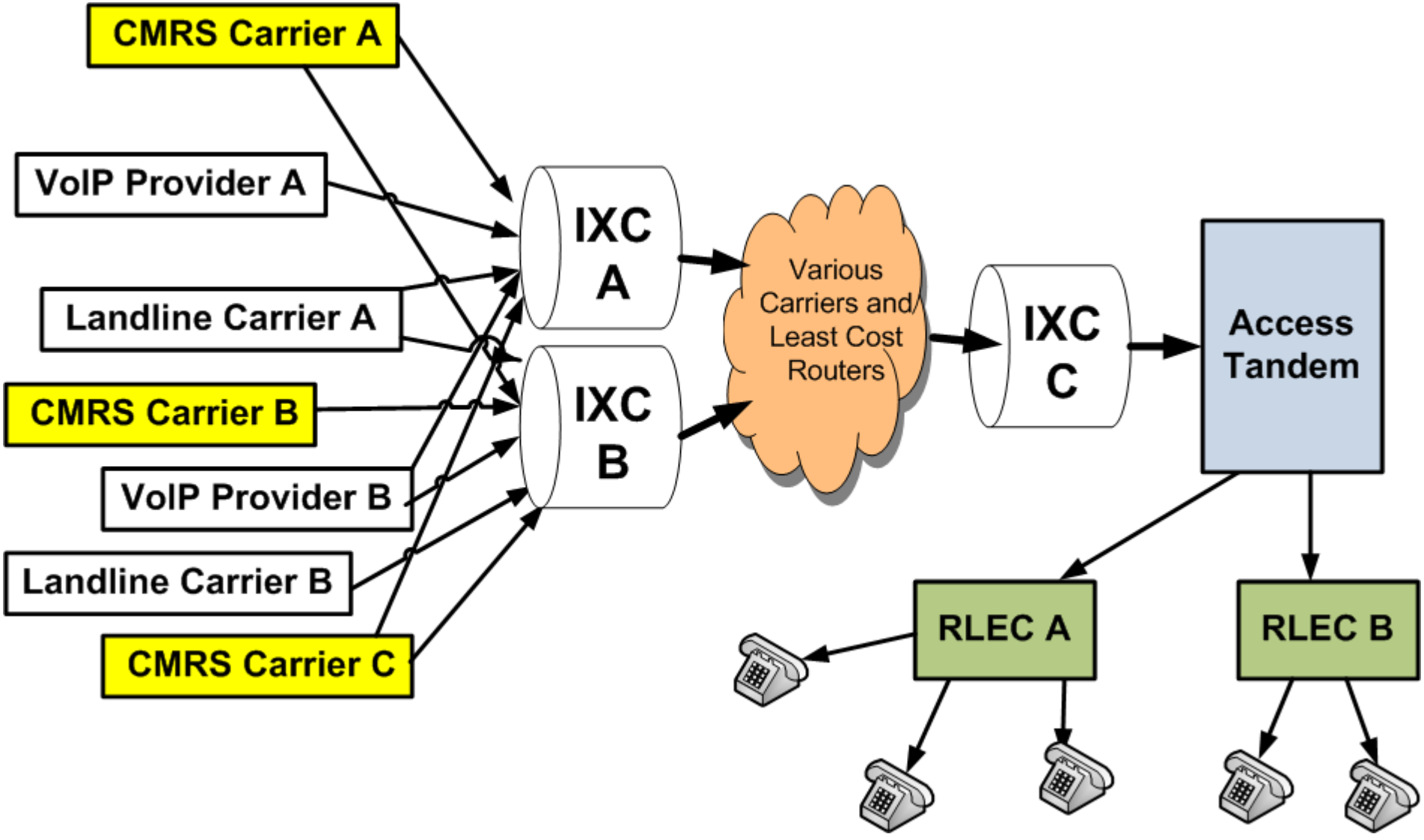

Mobile to Land
Proposed Use of Factors

- Accurate Factors to identify intraMTA traffic would be difficult, if not impossible to achieve
- IXCs have no ability to determine if call is interMTA or intraMTA
  - CMRS carrier does not deliver customer location or tower info to IXC
- CMRS carriers choice of IXC may vary from one call to the next
  - IXC selection based customer location, termination location, time of day, and other specifics
  - Factor could change from day to day or month to month
  - Rapid traffic pattern changes make factors impractical
- The IXC network has evolved such that there may be numerous carriers utilized between the CMRS carrier and RLEC
  - Final IXC may have little or no visibility as to the origin of the call and certainly no information regarding CMRS customer location
- RLECs have no way of verifying accuracy of IntraMTA factor
- Will result in a new form of arbitrage

Mobile to Land Short Term

- Continue with status quo
- CMRS carriers have routing options and should be responsible to route traffic properly
  - InterMTA delivered via IXC
  - IntraMTA delivered via local facilities
- CMRS carrier, not LEC, has wireless customer location data necessary for local routing

Mobile to Land
Long Term

- LECs need to be able to identify CMRS carrier's intraMTA traffic regardless of delivery path
  - Identification must occur at time call is originated, which requires SS7 signaling enhancements
    - LEC needs originating carrier type identifier
    - LEC needs location information including state and MTA identifier

Mobile to Land Long Term (cont)

- Would permit billing of all M-L intraMTA traffic as local regardless of routing
- Implementation timeframe must recognize technical issues
  - Enhancements to SS7
  - New switch/signaling enhancements
  - Update billing systems

Land to Mobile
What occurs today

- Wireline originated calls routed based on State established wireline local calling areas
  - If number called is rated within the landline local calling area = call is routed on a local trunk (direct, indirect, or EAS trunks)
  - If number called is rated outside landline local calling area = call is routed on access trunk to IXC

Land to Mobile Call Routing Issues

- Without access to certain information at time of routing, all intraMTA traffic cannot be delivered as local
  - RLECs cannot determine type of carrier (CMRS or non-CMRS) serving the called party at time of call
  - Roaming allows customer to be served by different carriers from one minute to the next
  - RLECs cannot determine CMRS customer location

Land to Mobile Concerns

- Significant Additional Expense
  - Signaling upgrades required to provide information on customer location
  - Switch upgrades required (many may no longer be supported) to route appropriately
  - New database would need to be developed to track CMRS customer in real time

Land to Mobile Concerns (cont)

- At time of call, customer will not know if originated call will be charged as local or toll
  - Significant customer confusion
    - Dialed Digits
      - Calling an unfamiliar number will it be 11, 10, or 7 digits
    - Porting of a number from a CMRS customer number to a landline number
      - Local as a wireless customer when within the MTA, then toll if landline and outside the local wireline calling area
    - Mobility of a CMRS customer
      - Could result in a call to the same wireless phone number be local one call and toll the next call depending solely on the called party location at the start of the call

Land to Mobile Concerns (cont)

- Many CMRS carriers have network in the same MTA, yet have no connection with the RLEC
  - RLEC would have no ability to deliver traffic to serving CMRS carrier on a local basis
- Additional Lost Access Revenue
  - Significant percentage of wireline originated calls terminate to CMRS customer in the MTA, and originating access is not addressed within the FCC's ICC Reform
- Infringement on State jurisdiction over wireline carriers and established wireline local calling areas

Questions?

Appendix

Appendix A - Diagrams

MTAs

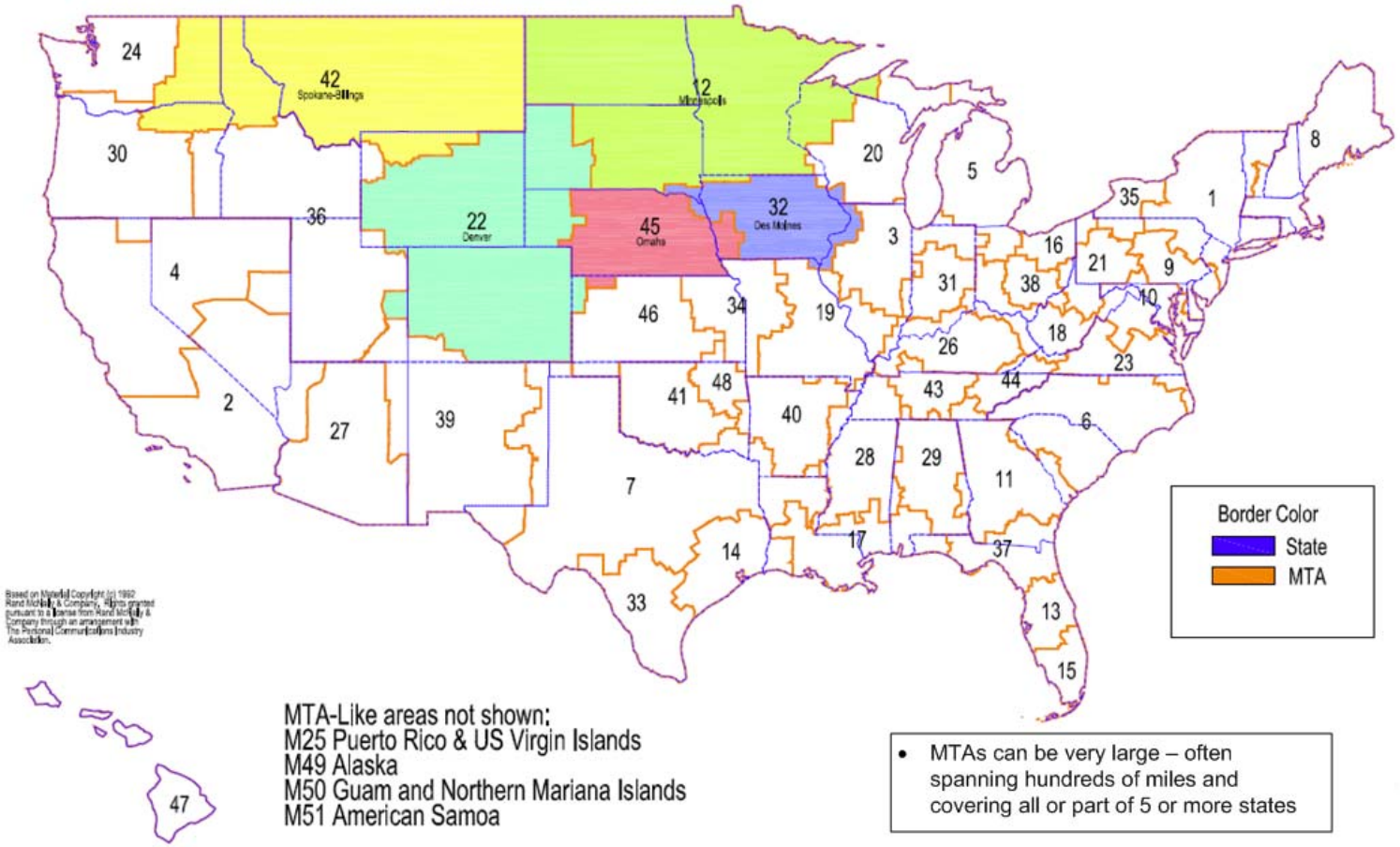
24
42
Spokane-Billings
12
Minneapolis
30
20
5
8
35
1
36
22
Denver
45
Omaha
32
Des Moines
3
16
21
9
4
31
38
10
46
34
19
18
26
23
2
27
39
41
48
40
43
44
6
28
29
11
7
17
37
14
33
13
15
47
Border Color
State
MTA
MTA-Like areas not shown;
M25 Puerto Rico & US Virgin Islands
M49 Alaska
M50 Guam and Northern Mariana Islands
M51 American Samoa
• MTAs can be very large – often spanning hundreds of miles and covering all or part of 5 or more states

Mobile to Land Traffic Today

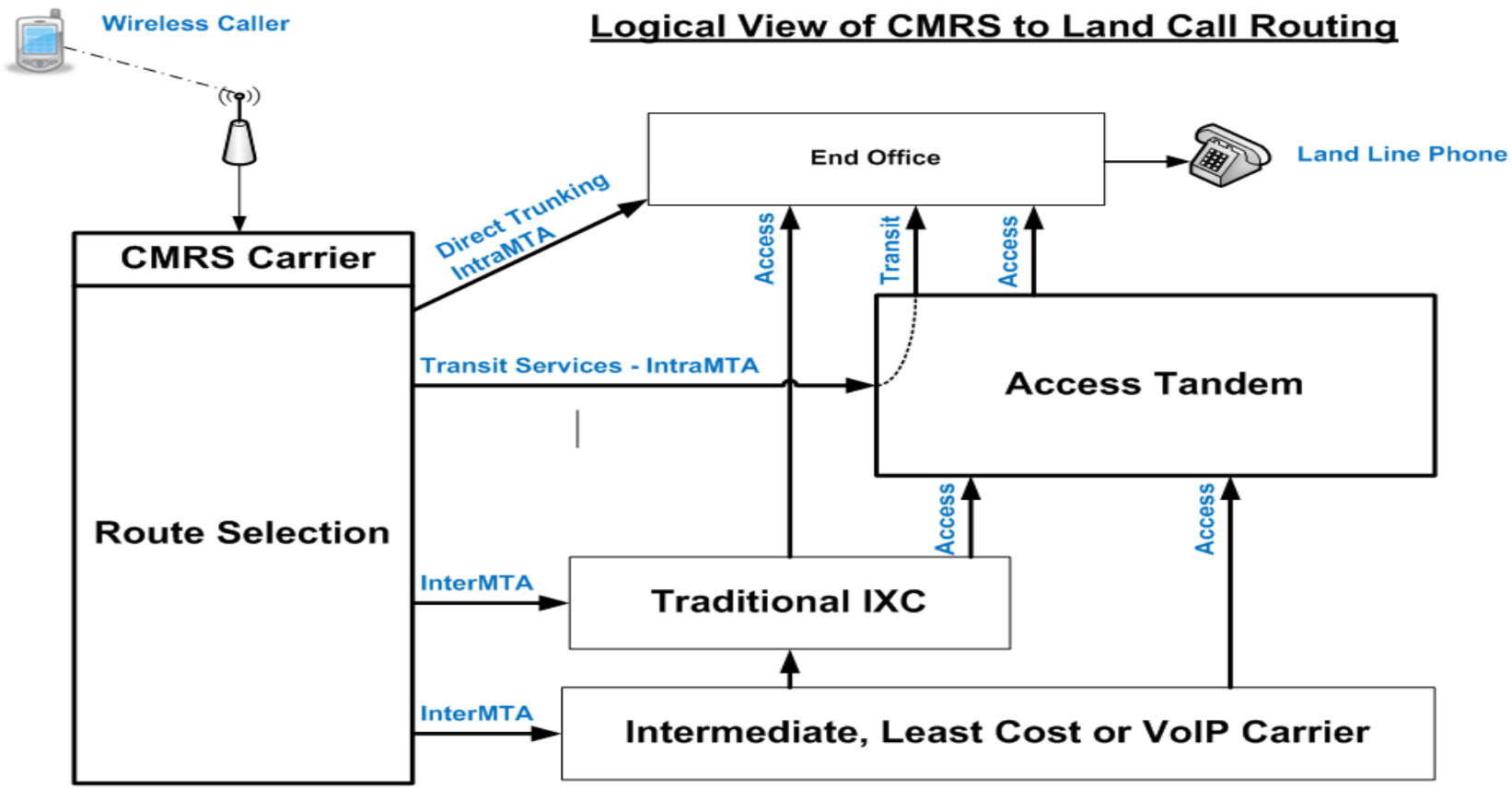

Note: Only the CMRS Carrier knows the location of the Wireless Calling Party

Land to Mobile Traffic Today

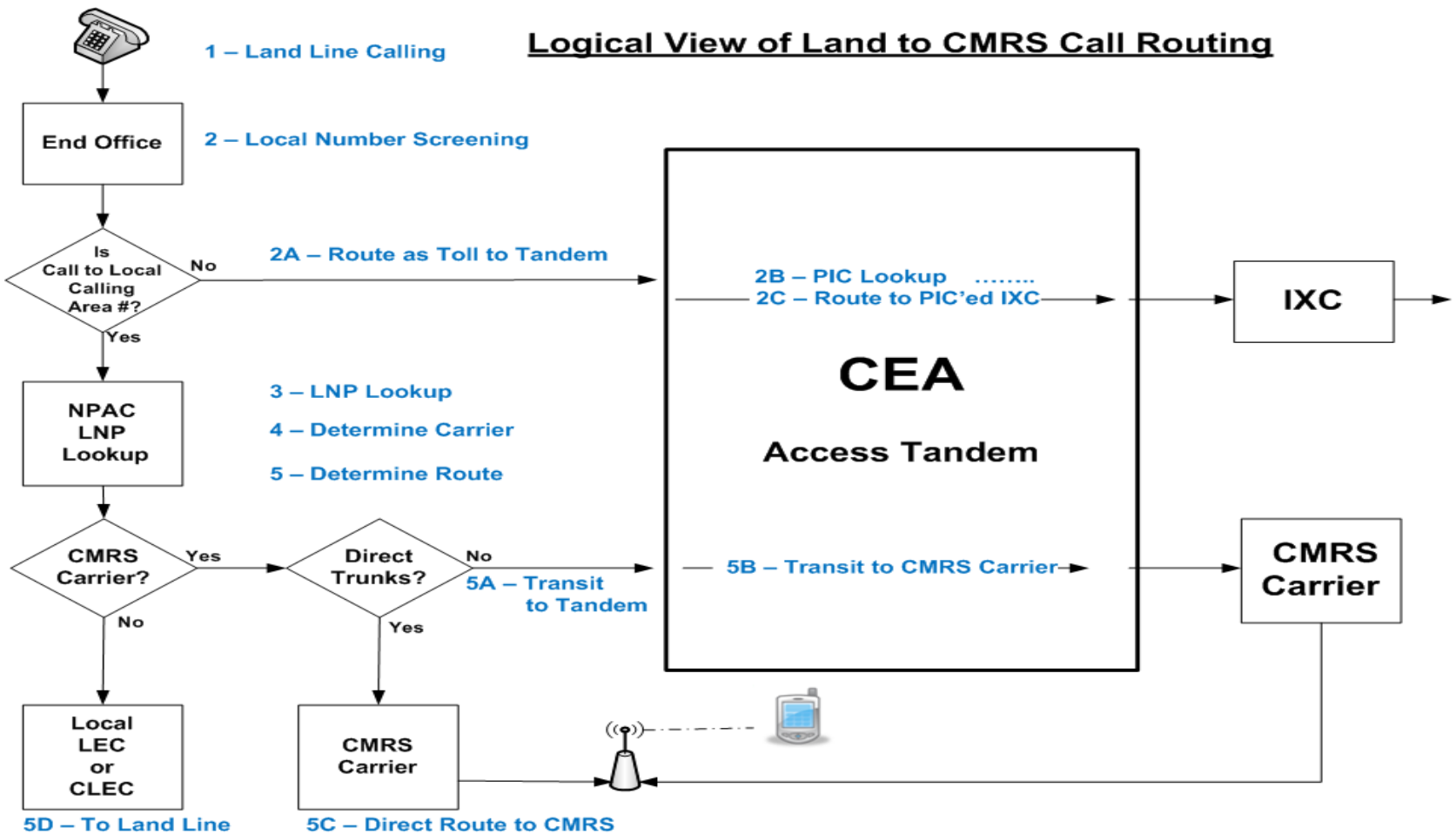

Note: Only the CMRS Carrier knows the actual location of the Called Wireless Subscriber