March 7, 2012

Marlene H. Dortch, Secretary
Federal Communications Commission
Office of the Secretary
445 12th Street, SW
Washington, DC 20554

Dear Ms. Dortch:

In the First Report and Order in MM Docket No. 99-325, the Commission sought the assistance of the National Radio Systems Committee (NRSC)[1] in the development of an In-Band/On-Channel (IBOC) digital radio standard.[2]

On May 18, 2005, the Consumer Electronics Association (CEA) and the National Association of Broadcasters (NAB), as the co-sponsors of the NRSC, submitted the NRSC In-Band/On-Channel (IBOC) Digital Radio Broadcasting Standard, NRSC-5, to the Commission for consideration.

NRSC-5 was approved by the NRSC's Digital Audio Broadcasting (DAB) Subcommittee on April 16, 2005. It is based on iBiquity Digital Corporation's IBOC digital radio technology. Subsequently, the standard was revised, as NRSC-5-A by the NRSC's Digital Radio Broadcasting (DRB) Subcommittee, adding sections concerning Advanced Application Services and a new reference document.

A further revision of the IBOC standard, NRSC-5-B, was adopted by the NRSC DRB Subcommittee on April 12, 2008. NRSC-5-B incorporated the revisions from NRSC-5-A and, in addition, updated the reference documents and made minor changes to the FM RF mask and to the description of hybrid IBOC operation. NRSC-5-B was submitted to the Commission for consideration on June 2, 2008.

The latest revision of the IBOC standard, NRSC-5-C, was adopted by the NRSC DRB Subcommittee on September 15, 2011. NRSC-5-C (which incorporates all previous revisions) includes numerous improvements and refinements to the iBiquity IBOC digital radio system.

[1] NRSC serves as an industry-wide standards-setting body for technical aspects of terrestrial over-the-air radio broadcasting systems in the United States.
[2] First Report and Order, MM Docket No. 99-325, released October 11, 2002, at ¶ 44.

NRSC-5-C is hereby submitted to the Commission, for its further consideration and approval as the basis for the FCC technical rules on IBOC digital radio.

Respectfully submitted,

CONSUMER ELECTRONICS ASSOCIATION

/s/ Julie M. Kearney

Julie M. Kearney
VP, Regulatory Affairs

Brian E. Markwalter
SVP, Research & Standards

NATIONAL ASSOCIATION OF BROADCASTERS

Valerie Schulte
Deputy General Counsel

Lynn D. Claudy
Senior VP, Technology

Attachment

NRSC STANDARD

NATIONAL RADIO SYSTEMS COMMITTEE

NRSC-5-C
In-band/on-channel Digital Radio Broadcasting Standard
September, 2011

NAB: 1771 N Street, N.W.
Washington, DC 20036
Tel: (202) 429-5356 Fax: (202) 775-4981

CEA: 1919 South Eads Street
Arlington, VA 22202
Tel: (703) 907-7660 Fax: (703) 907-8113

Co-sponsored by the Consumer Electronics Association and the National Association of Broadcasters
http://www.nrscstandards.org

NOTICE

NRSC Standards, Guidelines, Reports and other technical publications are designed to serve the public interest through eliminating misunderstandings between manufacturers and purchasers, facilitating interchangeability and improvement of products, and assisting the purchaser in selecting and obtaining with minimum delay the proper product for his particular need. Existence of such Standards, Guidelines, Reports and other technical publications shall not in any respect preclude any member or nonmember of the Consumer Electronics Association (CEA) or the National Association of Broadcasters (NAB) from manufacturing or selling products not conforming to such Standards, Guidelines, Reports and other technical publications, nor shall the existence of such Standards, Guidelines, Reports and other technical publications preclude their voluntary use by those other than CEA or NAB members, whether to be used either domestically or internationally.

Standards, Guidelines, Reports and other technical publications are adopted by the NRSC in accordance with the NRSC patent policy. By such action, CEA and NAB do not assume any liability to any patent owner, nor do they assume any obligation whatever to parties adopting the Standard, Guideline, Report or other technical publication.

This NRSC Standard is considered to have International Standardization implication, but the International Electrotechnical Commission activity has not progressed to the point where a valid comparison between the NRSC Standard and the IEC document can be made.

This Standard does not purport to address all safety problems associated with its use or all applicable regulatory requirements. It is the responsibility of the user of this Standard to establish appropriate safety and health practices and to determine the applicability of regulatory limitations before its use.

Published by
CONSUMER ELECTRONICS ASSOCIATION
Technology & Standards Department
1919 S. Eads St.
Arlington, VA 22202

NATIONAL ASSOCIATION OF BROADCASTERS
Technology Department
1771 N Street, NW
Washington, DC 20036

©2011 CEA & NAB. All rights reserved.

This document is available free of charge via the NRSC website at www.nrscstandards.org. Republication or further distribution of this document, in whole or in part, requires prior permission of CEA or NAB.

FOREWORD

NRSC-5-C, the fourth edition of the Standard, represents the most comprehensive revision to-date. Significant new capabilities are described including operation with asymmetric digital sidebands (AM band and FM band), operation with increased digital carrier power (FM band), and operation with reduced digital bandwidth (AM band). Also described are significant enhancements to data broadcasting including provisions for conditional access and emergency alerting.

This Standard was originally developed by the National Radio Systems Committee's (NRSC's) Digital Audio Broadcasting (DAB) Subcommittee and subsequently revised by the NRSC's Digital Radio Broadcasting (DRB) Subcommittee . At the time of first adoption, the NRSC was chaired by Charles Morgan of Susquehanna Broadcasting, the DAB Subcommittee was co-chaired by Michael Bergman of Kenwood and Milford Smith of Greater Media, and the IBOC Standards Development Working Group (ISDWG) was co-chaired by Paul Feinberg of Sony Electronics Inc. and Dr. H. Donald Messer of the International Broadcasting Bureau. For Revision C, the NRSC was chaired by Milford Smith of Greater Media, the DRB Subcommittee was co-chaired by Michael Bergman of Kenwood and Andy Laird of Journal Broadcasting, and the IBOC Standards Development Working Group (ISDWG) was chaired by Dom Bordonaro of Cox Broadcasting.

The NRSC is jointly sponsored by the Consumer Electronics Association and the National Association of Broadcasters. It serves as an industry-wide standards-setting body for technical aspects of terrestrial over-the-air radio broadcasting systems in the United States.

CONTENTS

1 SCOPE 7
2 REFERENCES 7
2.1 Normative References 7
2.2 Normative Reference Acquisition 8
2.3 Informative References 8
2.4 Informative Reference Acquisition 9
2.5 Definitions 9
2.6 Symbols and Abbreviations 13
2.7 Compliance Notation 14
3 SYSTEM OVERVIEW 15
3.1 RF/transmission Subsystem 15
3.2 Transport and Service Multiplex Subsystem 15
3.3 Audio and Data Input Subsystems 16
3.3.1 Audio Inputs 16
3.3.2 Data Inputs 17
3.3.2.1 Program Service Data Inputs 17
3.3.2.2 Station Information Service Inputs 17
3.3.2.3 Other Data Inputs 17
4 RF/TRANSMISSION SYSTEM CHARACTERISTICS 18
4.1 AM Band IBOC RF/transmission System Characteristics 18
4.1.1 Transmission Characteristics 19
4.1.2 Layer 1 Interface 19
4.1.3 Logical Channels 19
4.1.4 Channel Coding 19
4.1.4.1 Scrambling 19
4.1.4.2 Channel Encoding 20
4.1.4.3 Interleaving 21
4.1.5 System Control Processing 22
4.1.6 Subcarrier Mapping and Modulation 22
4.1.7 Transmission 23
4.1.8 Spectrum Emissions Limits for AM Band IBOC 24
4.1.8.1 Measurement of mask compliance for AM Band IBOC systems 26
4.2 FM Band RF/transmission System Characteristics 26
4.2.1 Transmission Characteristics 27
4.2.2 Layer 1 Interface 28
4.2.3 Logical Channels 28
4.2.4 Channel Coding 28
4.2.4.1 Scrambling 29
4.2.4.2 Channel Encoding 30
4.2.4.3 Interleaving 30
4.2.5 System Control Processing 30
4.2.6 Subcarrier Mapping and Modulation 31

4.2.7 Transmission 31
4.2.8 Spectrum Emissions Limits for FM Band IBOC 33
4.2.8.1 Measurement of mask compliance for FM Band IBOC systems 35
5 TRANSPORT AND SERVICE MULTIPLEX CHARACTERISTICS 36
5.1 Core Services Overview 36
5.1.1 Main Program Service (MPS) 36
5.1.1.1 MPS Audio 36
5.1.1.2 MPS Data Interface and Transport 38
5.1.2 Station Information Service (SIS) 38
5.1.2.1 SIS Interface 38
5.1.2.2 SIS Transport 39
5.2 Supplemental Services Overview 39
5.2.1 Supplemental Program Service (SPS) 39
5.2.1.1 SPS Audio 40
5.2.1.2 SPS Data Interface and Transport 40
5.3 Advanced Data Services (ADS) Overview 40
5.3.1 Advanced Application Services Transport (AAT) 41
5.3.1.1 Packet Encapsulation 42
5.3.1.2 Forward Error Correction (FEC) 42
5.3.1.2.1 Reed-Solomon Coding 42
5.3.1.2.2 Interleaving 42
5.3.1.2.3 Block Synchronization 42
5.3.2 Transmission Channels 42
5.3.2.1 Opportunistic Channel 43
5.3.2.2 Fixed Channel 44
5.3.2.2.1 Configuration Control Channel 44
5.3.2.2.2 Synchronization Channel 44
5.4 Channel Multiplex 44
5.4.1 Interface to RF/transmission subsystem 45
5.4.2 Configuration Administrator 45
6 AUDIO ENCODER CHARACTERISTICS 46
6.1 Audio codec modes 46
6.2 Opportunistic Data 47

ANNEX 1 – SUMMARY OF MOST SIGNIFICANT CHANGES INCLUDED IN NRSC-5-C

TABLES

Table 1. Description of MPS (or SPS) audio frame, packet and PDU 37
Table 2. Core MPS (or SPS) data fields 38
Table 3. Description of information transmitted by SIS 39
Table 4. Description of AAT packet encapsulation 42
Table 5. Description of transmission channel FEC configurations 43
Table 6. Audio codec mode definitions 46

FIGURES

Figure 1: Overview of IBOC digital radio broadcasting system 16
Figure 2: AM band implementation of NRSC-5 IBOC digital radio broadcasting standard 18
Figure 3: RF/transmission subsystem block diagram 19
Figure 4: AM band air interface Layer 1 functional block diagram with details of data flow illustrated . 20
Figure 5: Interleaving conceptual block diagram 21
Figure 6: System control processing conceptual diagram 22
Figure 7: OFDM subcarrier mapping functional block diagram 23
Figure 8: Hybrid transmission subsystem functional block diagram 24
Figure 9. NRSC-5 AM band hybrid waveform spectral emissions limits for 5 kHz analog bandwidth configuration 25
Figure 10. NRSC-5 AM band hybrid waveform spectral emissions limits for 8 kHz analog bandwidth configuration 25
Figure 11 NRSC-5 AM band hybrid waveform spectral emission limits for reduced digital bandwidth configuration 25
Figure 12. NRSC-5 AM band all-digital waveform spectral emissions limits 26
Figure 13: FM band implementation of NRSC-5 IBOC digital radio broadcasting standard 27
Figure 14: RF/transmission subsystem block diagram 28
Figure 15: FM band air interface Layer 1 functional block diagram with details of data flow illustrated 29
Figure 16: Interleaving conceptual block diagram 30
Figure 17: System control processing conceptual diagram 31
Figure 18: OFDM subcarrier mapping conceptual block diagram 32
Figure 19: Hybrid/extended hybrid transmission subsystem functional block diagram 33
Figure 20. NRSC-5 FM band hybrid waveform noise and emission limits 34
Figure 21. NRSC-5 all-digital waveform noise and emission limits 34
Figure 22: Audio transport interface diagram 37
Figure 23. Advanced Data Services Protocol Interface Diagram 41
Figure 24. Byte Stream Encoding 41
Figure 25. AAT Packet Transport Mechanism 43
Figure 26. Fixed Channel structure 44

NRSC-5-C

IN-BAND/ON-CHANNEL DIGITAL RADIO BROADCASTING STANDARD

1 SCOPE

This Standard sets forth the requirements for a system for broadcasting digital audio and ancillary digital data signals over AM broadcast channels spaced 10 kHz apart that may contain analog amplitude modulated signals, and over FM broadcast channels spaced 200 kHz apart that may contain analog frequency modulated signals.

2 REFERENCES

2.1 Normative References

The following normative references are incorporated by reference herein. At the time of publication the edition indicated was valid. All standards are subject to revision, and parties to agreements based on this Standard are encouraged to investigate the possibility of applying the most recent editions of this Standard and/or the references listed below. In case of discrepancy normative references shall prevail.

For the purposes of compliance with this Standard, the use of the term “HD Radio™” in the normative references shall be interpreted as the generic term “IBOC” for the NRSC-5 compliant system and shall not be construed as a requirement to adhere to undisclosed private specifications that are required to license the HD Radio name from its owner.

Note that information relating to the iBiquity Advanced Application Service (AAS) in the normative reference documents is considered non-normative. Only the Advanced Application Services Transport (AAT) is incorporated as normative in this Standard, and is described in normative reference [10].

[1] Doc. No. SY_IDD_1011s rev. G, HD Radio Air Interface Design Description - Layer 1 FM, iBiquity Digital Corporation, 8/23/11

[2] Doc. No. SY_IDD_1012s rev. F, HD Radio Air Interface Design Description – Layer 1 AM, iBiquity Digital Corporation, 8/23/11

[3] Doc. No. SY_IDD_1014s rev. I, HD Radio Air Interface Design Description – Layer 2 Channel Multiplex Protocol, iBiquity Digital Corporation, 8/23/11

[4] Doc. No. SY_IDD_1017s rev. G., HD Radio Air Interface Design Description – Audio Transport, iBiquity Digital Corporation, 8/23/11

[5] Doc. No. SY_IDD_1020s rev. I, HD Radio Air Interface Design Description – Station Information Service Protocol, iBiquity Digital Corporation, 8/23/11

[6] Doc. No. SY_SSS_1026s rev. F, HD Radio FM Transmission System Specifications, iBiquity Digital Corporation, 8/24/11

[7] Doc. No. SY_IDD_1028s rev. D, HD Radio Air Interface Design Description – Main Program Service Data, iBiquity Digital Corporation, 11/7/07

[8] Doc. No. SY_SSS_1082s rev. F, HD Radio AM Transmission System Specifications, iBiquity Digital Corporation, 8/24/11

[9] Doc. No. SY_IDD_1085s rev. C, HD Radio Air Interface Design Description – Program Service Data Transport, iBiquity Digital Corporation, 2/7/05

[10] Doc. No. SY_IDD_1019s rev. G, HD Radio Air Interface Design Description – Advanced Application Services Transport, iBiquity Digital Corporation, 8/23/11

[11] Doc. No. SY_IDD_2646s rev. 02, Transmission Signal Quality Metrics for FM IBOC Signals, iBiquity Digital Corporation, 8/24/11

[12] Doc. No. SY REF 2690s rev. 01, Reference Documents for the NRSC In-Band/On-Channel Digital Radio Broadcasting Standard, 8/23/11

2.2 Normative Reference Acquisition

iBiquity Digital Corporation reference documents:

National Radio Systems Committee (co-sponsored by the Consumer Electronics Association and the National Association of Broadcasters)
CEA: 1919 South Eads Street, Arlington VA 22202; Tel: 703-907-7421; Fax: 703-907-4190
NAB: 1771 N Street NW, Washington DC 20036; Tel: 202-429-5346; Fax: 202-775-4981
http://www.nrscstandards.org

2.3 Informative References

The following references contain information that may be useful to those implementing this Standard. At the time of publication the edition indicated was valid. All standards are subject to revision, and parties to agreements based on this Standard are encouraged to investigate the possibility of applying the most recent editions of the standards listed below.

[13] *NRSC-G200-A – Harmonization of RDS and IBOC Program Service Data (PSD) Guideline*, National Radio Systems Committee, March 2010

[14] *NRSC-G201-A – NRSC-5-B RF Mask Compliance: Measurement Methods and Practice*, National Radio Systems Committee, April 2010

[15] *NRSC-G202 – FM IBOC Total Digital Sideband Power for Various Configurations*, National Radio Systems Committee, September 2010

[16] *NRSC-4-B – United States RBDS Standard*, National Radio Systems Committee, April 2011

[17] *HD Radio Implementation: The Field Guide for Facility Conversion*, Focal Press, 2008

[18] *The IBOC Handbook: Understanding HD Radio Technology*, Focal Press, 2007

[19] *The NAB Engineering Handbook, 10th Edition*, Focal Press, 2007

[20] *NRSC-R207 – Broadcasting Surround Sound Audio over IBOC Digital Radio - Issues and Resources for FM Broadcasters*, National Radio Systems Committee, January 2007

[21] NRSC-R206 – *Evaluation of iBiquity AM and FM IBOC "Gen 3" hardware*, National Radio Systems Committee, June 2004

[22] *NRSC-R205 – Evaluation of iBiquity FM IBOC "Gen 2" hardware*, National Radio Systems Committee, May 2002

[23] NRSC-R204 – *Evaluation of the iBiquity Digital Corporation IBOC System – Part 2 – AM IBOC*, National Radio Systems Committee, April 2002

[24] *NRSC-R203 – Evaluation of the iBiquity Digital Corporation IBOC System – Part 1 – FM IBOC*, National Radio Systems Committee, November 2001

[25] *RFC 1662 - PPP in HDLC-like Framing*, Network Working Group, Internet Engineering Task Force (IETF), July 1994

2.4 Informative Reference Acquisition

NRSC Guidelines:
National Radio Systems Committee (co-sponsored by the Consumer Electronics Association and the National Association of Broadcasters)
CEA: 1919 South Eads Street, Arlington VA 22202; Tel: 703-907-7421; Fax: 703-907-4190
NAB: 1771 N Street NW, Washington DC 20036; Tel: 202-429-5346; Fax: 202-775-4981
http://www.nrscstandards.org

IETF Standard RFC 1662 :
Available on the Internet at http://tools.ietf.org/html/rfc1662.

2.5 Definitions

In this Standard the practice of the Institute of Electrical and Electronics Engineers (IEEE) as outlined in the Institute's published standards is used for definitions of terms. Definitions of terms used in this Standard that are not covered by IEEE practice, or for which industry practice differs from IEEE practice, are as follows:

Advanced Application Services (AAS) Advanced Application Services is the iBiquity implementation of the generic ADS described in this document and is not part of this Standard. AAS is transported on IBOC by AAT.

Advanced Application Services Transport (AAT) Advanced Applications Services Transport is the transport mechanism incorporated in this Standard that enables the transmission of advanced data services, such as those supplied by the iBiquity AAS.

Advanced data services (ADS) Advanced data services are any data services consisting of either text, audio, video, or other data carried on the IBOC transport other than SIS, MPSD, or SPSD.

All-digital waveform A transmitted waveform for modes which do not include the analog modulated signal. For FM band IBOC, the all-digital waveform is composed entirely of digitally modulated subcarriers, while for AM band IBOC, the all-digital waveform is composed of digitally modulated subcarriers and the unmodulated AM carrier. Note that as of the date of this Standard the all-digital waveform is not approved for use by the FCC.

Asymmetric sidebands Refers to an AM band IBOC or FM band hybrid or extended hybrid IBOC configuration in which the upper and lower digital sidebands of the IBOC signal are at different power levels. Asymmetric sidebands are utilized when one sideband must be kept lower than the other sideband in order to protect a radio station on an adjacent frequency.

Channel encoding The process used to add error protection to each of the logical channels to improve the reliability of the transmitted information.

Code rate — Defines the increase in overhead on a coded channel resulting from channel encoding. It is the ratio of information bits to the total number of bits after coding.

Configuration administrator — This is a high level control system which manages operating modes and transmits corresponding settings to various lower level functional blocks. Its purpose is to set operating modes (e.g. MP1, MP2, AM band mode, FM band mode, Supplemental Program Service, etc.). The form of the Configuration Administrator will be dependent on each implementation. Its structure and detail are not specified by NRSC-5.

Convolutional encoding — A form of forward-error-correction channel encoding that inserts coding bits into a continuous stream of information bits to form a predictable structure. Unlike a block encoder, a convolutional encoder has memory; its output is a function of current and previous inputs.

Digital sideband — The digital portion of an IBOC signal consisting of groups of digitally modulated subcarriers located on either side (in frequency) of the analog portion (or for AM band IBOC, beneath the analog portion as well). These subcarriers are organized into groups called digital sidebands. There are three types of digital sidebands defined for IBOC signals—primary, secondary, and tertiary—however hybrid and extended hybrid FM band IBOC signals only utilize primary (all-digital IBOC signals utilize both primary and secondary digital sidebands). For FM band IBOC, the primary digital sidebands are further subdivided into main and extended portions (see, for example, Figure 5-6 of [1]). Digital sidebands are also distinguished by their relative position (in frequency) to the analog (host) signal—if they are higher in frequency they are called upper digital sidebands, and if lower in frequency, lower digital sidebands.

Digital subcarrier — Describes each of the individual OFDM carriers that comprise the digital sidebands of the OFDM waveform.

Diversity delay — Imposition of a fixed time delay in one of two channels carrying the same information to defeat non-stationary channel impairments such as fading and impulsive noise.

Extended hybrid waveform — An FM band IBOC transmitted waveform for modes composed of the analog FM signal plus digitally modulated primary main subcarriers and some or all primary extended subcarriers. This waveform will normally be used by broadcasters requiring additional digital capacity over that provided by the hybrid mode of operation (provides up to approximately 50 kbps additional capacity)..

Frequency partition — (For FM band IBOC) a group of OFDM subcarriers containing data subcarriers and a reference subcarrier.

HD Radio™ — Trademark (of iBiquity Digital Corporation) for the digital AM band and digital FM band transmission technology authorized by the FCC. Note that in the NRSC-5 Standard and its normative references, the use of the term “HD Radio” is

	interpreted as the generic term “IBOC” and should not be construed as a requirement to adhere to undisclosed private specifications that are required to license the HD Radio name from its owner.
Hybrid waveform	A transmitted waveform for modes composed of the analog - modulated signal, plus digitally modulated primary main subcarriers. This waveform will normally be used by a broadcaster during initial implementation of IBOC services. This waveform would also be used during a transitional phase preceding conversion to the all-digital waveform (note that as of the date of this Standard the all-digital waveform is not approved for use by the FCC).
Interleaver partition	A logical subdivision of the overall interleaver matrix.
Interleaving	A reordering of the message bits to distribute them in time (over different OFDM symbols) and frequency (over different OFDM subcarriers) to mitigate the effects of signal fading and interference.
Interleaving process	A series of manipulations performed on one or more coded transfer frames (vectors) to reorder their bits into one or more interleaver matrices whose contents are destined for a particular portion of the transmitted spectrum.
Logical channel	A signal path that conducts transfer frames from Layer 2 through Layer 1 with a specified grade of service.
Main Program Service (MPS)	The audio programming and program service data that a radio station broadcasts over its main channel for reception by the general public.
Main Program Service Data (MPSD)	One of two general classes of information sent through the MPS (the other being Main Program Service Audio). Main Program Service Data is Program Service Data (defined below) that is associated with the Main Program Service.
OFDM subcarrier	A narrowband PSK or QAM-modulated carrier within the allocated channel, which, taken together with all OFDM subcarriers, constitute the frequency domain representation of one OFDM symbol.
OFDM symbol	Time domain pulse of duration T_s, representing all the active subcarriers and containing all the data in one row from the interleaver and system control data sequence matrices.
Program Service Data (PSD)	Data that is transmitted along with the program audio and that is intended to describe or complement the audio program heard by the listener (*e.g.,* song title, artist, etc.)
Protocol Data Unit (PDU)	A Protocol Data Unit (PDU) is the structured data block in the IBOC system that is produced by a specific layer (or process within a layer) of the transmitter protocol stack. The PDUs of a given layer may encapsulate PDUs from the next higher layer of the stack and/or include content data and protocol-control

	information originating in the layer (or process) itself. The PDUs generated by each layer (or process) in the transmitter protocol stack are inputs to a corresponding layer (or process) in the receiver protocol stack.
RDS	Radio Data System is an industry-standard method for transmitting low bit-rate data (~1187 bps) over an FM subcarrier. In the U.S., RDS usage is guided by the NRSC-4-B Standard [16].
Reference subcarrier	Dedicated OFDM subcarrier modulated with the SCCH data. There are up to 61 reference subcarriers depending on the mode (for FM band) and up to 4 for AM band.
RF mask	The graphical representation of the allowable RF signal power spectral density (relative to a specific bandwidth) versus frequency for an RF transmission. Typically, the power values are indicated relative to the power of an unmodulated signal at the center frequency of the signal.
Service mode	A specific configuration of operating parameters specifying throughput, performance level, and selected logical channels.
Station Information Service (SIS)	The Station Information Services provides the necessary radio station control and identification information, such as station call sign identification, time and location reference information.
Supplemental Program Service (SPS)	The Supplemental Program Service provides for the option of multiplexing additional programs with the MPS. The SPS includes Supplemental Program Service Audio (SPSA) and may also include Supplemental Program Service Data (SPSD).
Supplemental Program Service Data (SPSD)	One of two general classes of information sent through the SPS (the other being Supplemental Program Service Audio). Supplemental Program Service Data is Program Service Data (defined above) that is associated with the Supplemental Program Service.
Symmetric sidebands	Refers to an IBOC configuration in which the upper and lower digital sidebands of the IBOC signal are at the same power levels. This is the default (nominal) configuration for all AM band and FM band IBOC transmissions. In this case, the power of each sideband (e.g., for FM band IBOC, -23 dBc) sums to a total power that is double the power of the individual sidebands (e.g., for FM band IBOC, -20 dBc).
System control channel (SCCH)	A channel consisting of control information from the configuration administrator and status information from Layer 1.
System control data sequence	A sequence of bits destined for each reference subcarrier representing the various system control components relayed between Layer 1 and Layer 2.
System protocol stack	The ordered protocols associated with data processing in the transmitter and receiver.

Transfer frame	An ordered, one-dimensional collection of data bits of specified length originating in Layer 2, grouped for processing through a logical channel.
Transfer frame multiplexer	A device that combines two or more transfer frames into a single vector.

2.6 Symbols and Abbreviations

Symbols and abbreviations used in this Standard are as follows:

AAS	Advanced Application Services
AAT	Advanced Application Services Transport
ADS	Advanced Data Services
AM	Amplitude Modulation
API	Application Programming Interface
BBM	Block Boundary Marker
BPSK	Binary Phase Shift Keying
FCC	Federal Communications Commission
FEC	Forward Error Correction
FM	Frequency Modulation
GPS	Global Positioning System
IBOC	In-Band/On-Channel
ID	Identification
IP	Interleaving Processes
L1	Layer 1
MF	Medium Frequency
MPSA	Main Program Service Audio
MPS	Main Program Service
MPSD	Main Program Service Data
N/A	Not Applicable
OFDM	Orthogonal Frequency Division Multiplexing
P3IS	P3 Interleaver Select (this function was rendered obsolete in rev. B)
PAD	Program Associated Data
PCM	Pulse Code Modulation
PDU	Protocol Data Unit
PIDS	Primary IBOC Data Service Logical Channel
PM	Primary Main
PPP	Point to Point Protocol
PSD	Program Service Data
PX	Primary Extended
QAM	Quadrature Amplitude Modulation
QPSK	Quadrature Phase Shift Keying
RF	Radio Frequency
SB	Secondary Broadband
SCCH	System Control Channel
SIDS	Secondary IBOC Data Service Logical Channel
SIS	Station Information Service
SM	Secondary Main
SP	Secondary Protected
SPSA	Supplemental Program Service Audio
SPS	Supplemental Program Service
SPSD	Supplemental Program Service Data
SX	Secondary Extended
URL	Uniform Resource Locator

VHF Very High Frequency

2.7 Compliance Notation

As used in this document, “shall” or “will” denotes a mandatory provision of the standard. “Should” denotes a provision that is recommended but not mandatory. “May” denotes a feature whose absence does not preclude compliance, and that may or may not be present at the option of the implementer.

3 SYSTEM OVERVIEW

The In-Band/On-Channel (IBOC) digital radio broadcasting system specified in this Standard is designed to permit a smooth evolution from current analog radio broadcasting to fully digital radio broadcasting. Two types of transmissions are specified: hybrid, which consist of a combination of legacy analog (either AM or FM) signals and digital signals, and all-digital which contain no analog modulated component. Both hybrid and all-digital transmissions are designed to fit within the relevant FCC RF masks in effect at the time of adoption of this Standard.[1]

The IBOC system delivers digital audio and data services to mobile, portable, and fixed receivers from terrestrial transmitters on existing Amplitude Modulation (AM) and Frequency Modulation (FM) radio broadcast channels. In hybrid mode, broadcasters may continue to transmit AM and FM analog signals simultaneously with the IBOC digital signals, allowing themselves and their listeners to convert from analog to digital radio while maintaining their current frequency allocations.

The system accepts as input compressed digital audio and utilizes baseband signal processing techniques such as interleaving and forward error correction to increase the robustness of the signal in the transmission channel. This allows a high quality audio signal plus ancillary data to be transmitted using power levels and band segments selected for robustness and to minimize interference to existing analog signals.

Figure 1 illustrates the three major subsystems of the IBOC digital radio broadcasting system specified by NRSC-5 and how they relate to one another.[2] The major subsystems are:

- RF/transmission subsystem
- Transport and service multiplex subsystem
- Audio and data input subsystems

3.1 RF/transmission Subsystem

The RF/transmission subsystem shall comply with the requirements in [1] and [6] for FM band and [2] and [8] for AM band. This subsystem takes the multiplexed bit stream and applies coding and interleaving that can be used by the receiver to reconstruct the transmitted data, even when the received signal does not exactly match the transmitted signal due to impairments in the channel. The multiplexed and coded bit stream is modulated onto orthogonal frequency division multiplexed (OFDM) subcarriers and up-converted to the AM or FM band. A description of the RF/transmission subsystem is given in Section 4; a detailed specification is given in [1] and [6] (FM band) and [2] and [8] (AM band) .

3.2 Transport and Service Multiplex Subsystem

The transport and service multiplex subsystem shall comply with the requirements in [3], [4], [5], and [9]. This subsystem feeds the information to be transmitted to the RF/transmission subsystem. It takes the audio and data information that it receives, organizes it into packets, and multiplexes the packets into a single data stream. Each packet is uniquely identified as an audio or data packet. Certain data packets (*i.e.,* those containing program service data, which includes song title, artist, etc.) are added to the stream of packets carrying their associated audio information before they are fed into the multiplexer.

The transport stream is modeled loosely on the ISO 7498-1 standard. A description of the transport and service multiplex subsystem is given in Section 5; a detailed specification is given in [3], [4], [5], and [9].

[1] See 47 CFR §73.44 (AM) or 47 CFR §73.317 (FM).
[2] This system, operating in hybrid modes MP1 (FM band) and MA1 (AM band, 5 kHz analog bandwidth configuration) underwent an extensive evaluation by the NRSC [21] [22] [23] [24] . The NRSC has not tested or evaluated any modes other than these. These operating modes are described in [1] and [2] for the FM and AM bands, respectively.

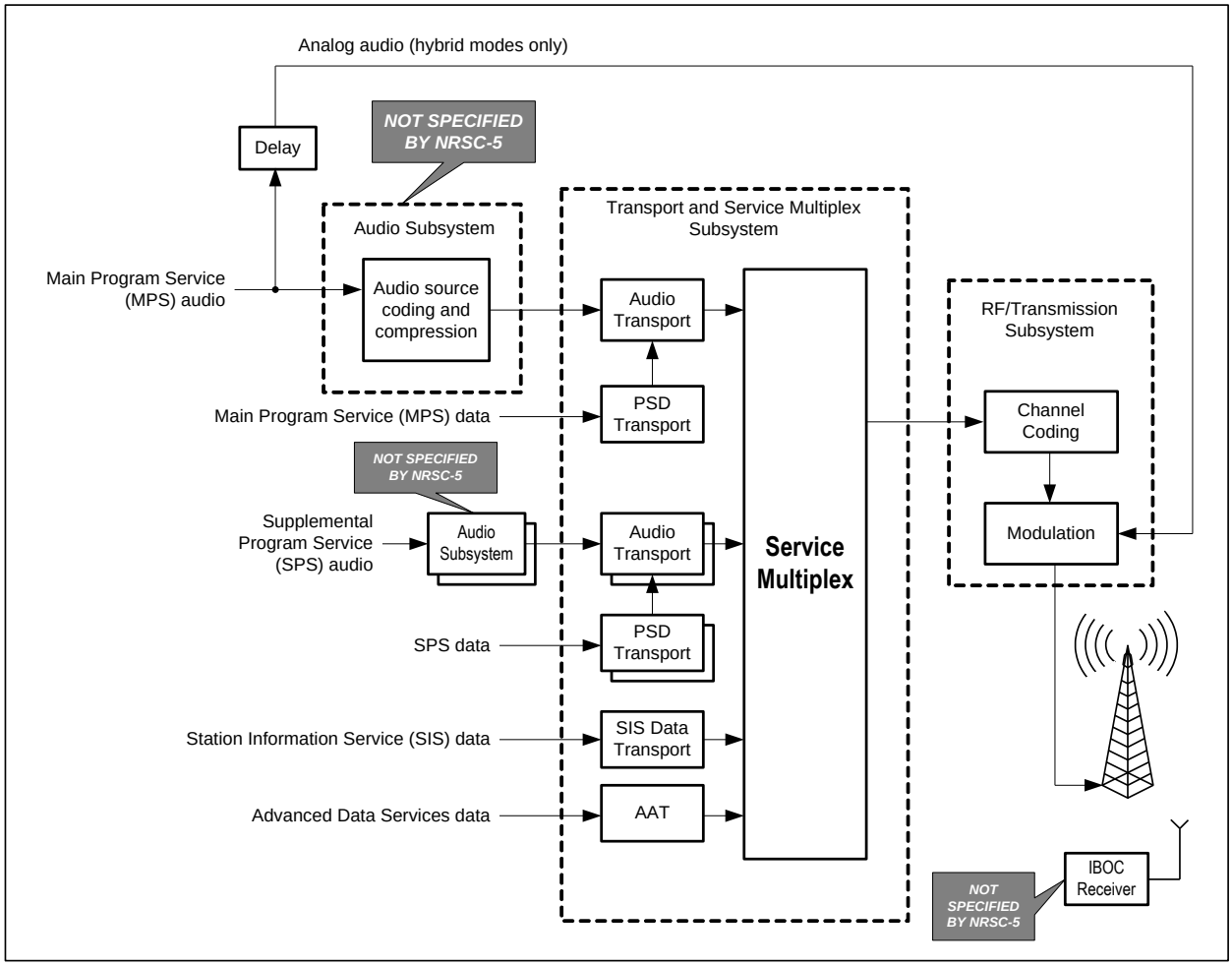

Figure 1: Overview of IBOC digital radio broadcasting system

3.3 Audio and Data Input Subsystems

3.3.1 Audio Inputs

Source coding and compression of the main program service (MPS) and supplemental program service (SPS) audio must be performed before the audio information is fed into the audio transport subsystems. Each audio service (main program service and each individual supplemental program service) has its own source coding, compression and transport subsystem. NRSC-5 does not include specifications for audio source coding and compression. Suitable audio source coding and compression systems will use appropriate technologies (*e.g.*, perceptual audio coding) to reduce the bit rate required for description of audio signals.

In hybrid modes the analog MPS audio is also modulated directly onto the RF carrier for reception by conventional analog receivers. The MPS analog audio does not pass through the audio transport subsystem, and is delayed so that it will arrive at the receiver close enough in time to the digital signal.[3] This will enable seamless switching from digital to analog reception when the received signal quality is not sufficient for digital audio reception or when digital packets in the MPS PDU are corrupted. This

[3] This is referred to as “diversity delay” and is specified in [1] and [2].

"blend" capability is also used for fast channel changes, allowing the receiver to demodulate and play out the analog stream first and then blend to the digital audio stream.

MPS audio is discussed further in Section 5, and some of the necessary characteristics for audio source coding are described in Section 6.

3.3.2 Data Inputs

There are three types of data inputs to the IBOC digital radio broadcasting system. The first type is Program Service Data (PSD), which includes descriptive information associated with the transmitted audio programming such as song title and artist. The second type is Station Information Service (SIS) data, which contains information about the station and the signal that is not associated with an individual program stream. The third type of data is Advanced Data Services (ADS) data, which is referred to generally as "other data."

3.3.2.1 Program Service Data Inputs

PSD inputs shall comply with the detailed requirements in [7].[4] The PSD fields include song title, artist, album, genre, comment, commercial and reference identifiers. A description of PSD is given in Section 5.

There are two classifications of PSD. The first is Main PSD (MPSD), which may be transmitted along with the main program audio and is intended to describe or complement the main program audio program heard by the radio listener.

The second classification of PSD is Supplemental PSD (SPSD), which may be transmitted with each Supplemental Program Service audio program. Each SPSD input is formatted in the same fashion as MPSD, but has content for and is associated with a specific Supplemental Program Service audio program.

3.3.2.2 Station Information Service Inputs

The second major type of data input to the IBOC digital radio broadcasting system is Station Information Service (SIS) data. Station Information Service Data inputs shall comply with the requirements in [5]. SIS data provides general information about the station, including technical information that is useful for non-program related applications. The SIS fields include station identification number (based in part on the FCC facility identification number), station call letters, station name, station location, program category (for Main and Supplemental programs), Active Radio (used for emergency alerting), a field that permits the broadcaster to send an arbitrary text message, and fields reserved for future use. A description of SIS data is given in Section 5; a detailed specification is given in [5].

3.3.2.3 Other Data Inputs

Advanced Data Services (ADS) provide broadcasters with the ability to transmit information that may be unrelated to MPS, SPS or SIS. These services can carry any form and content that can be expressed as a data file or a data stream, including audio services. Examples of such services include (i) visual effects associated with MPS, SIS, or SPS services; (ii) multimedia presentations of stock, news, weather, and entertainment programming including audio, text and images; (iii) broadcast updates to in-vehicle systems; (iv) local storage of content for time shifting and later replay; (v) targeted advertising; (vi) traffic updates and information for use with navigation systems; and (vii) subscription or free-but-limited-access services using conditional access. These services are incorporated onto the IBOC signal through the AAT protocol, and are discussed further in Section 5.

[4] PSD is sometimes referred to as Program Associated Data (PAD).

4 RF/TRANSMISSION SYSTEM CHARACTERISTICS

4.1 AM Band IBOC RF/transmission System Characteristics

This section specifies the RF portion of the NRSC-5 IBOC Digital Radio Broadcasting Standard for AM band implementations. Figure 2 illustrates how the Standard is partitioned according to protocol layer and is annotated with referenced documents that specify the associated detailed requirements. It is an overview of the entire AM band implementation of the NRSC-5 IBOC Digital Radio Broadcasting Standard.

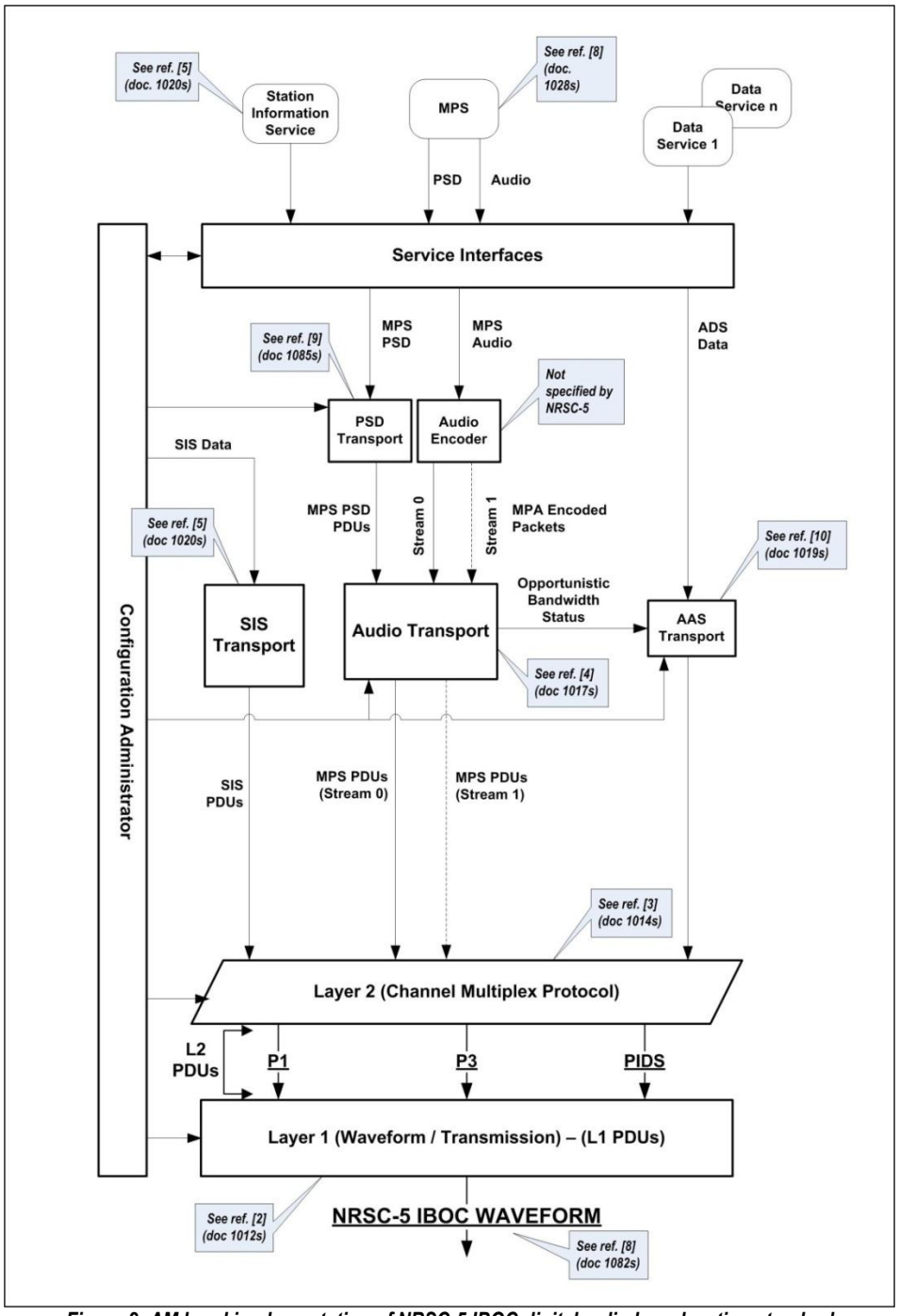

Figure 2: AM band implementation of NRSC-5 IBOC digital radio broadcasting standard

4.1.1 Transmission Characteristics

This section includes a high-level description of each Layer 1 functional block and the associated signal flow. Figure 3 is a top level block diagram of the RF/transmission subsystem illustrating the order of processing therein. Figure 4 is a functional block diagram of Layer 1 processing.[5] Audio and data are passed from the higher protocol layers to the physical layer, the modem, through the Layer 2 – Layer 1 interface.

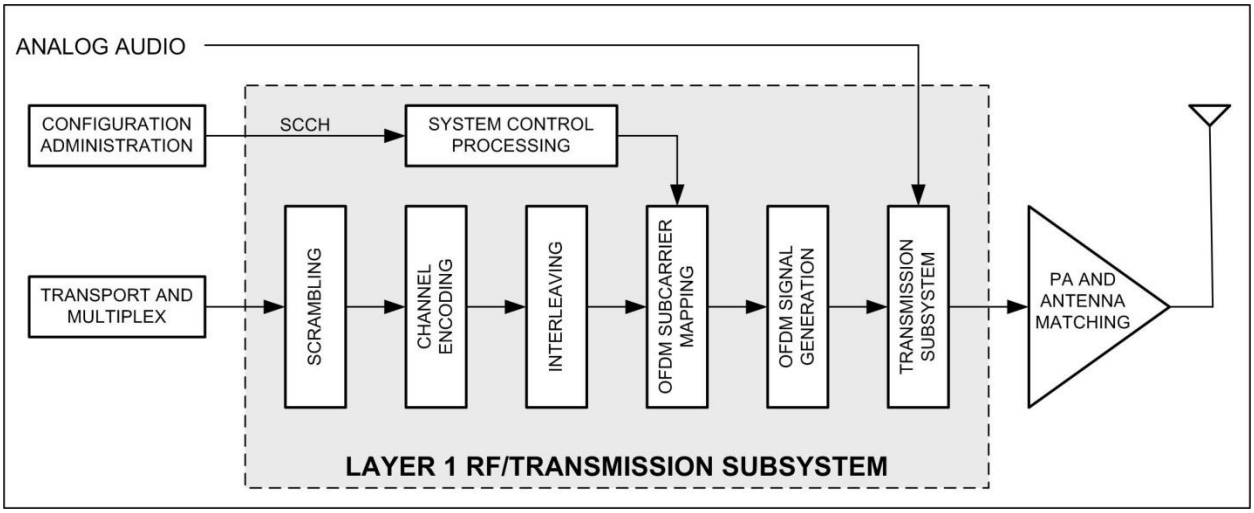

Figure 3: RF/transmission subsystem block diagram

4.1.2 Layer 1 Interface

The Layer 1 interface illustrates the access points between the channel multiplex and Layer 1 of the system protocol stack. Data enters Layer 1 as discrete transfer frames, with unique size and rate determined by the service mode, as specified in [2]. Transfer frames that carry information from the channel multiplex are referred to as L1 PDUs.

4.1.3 Logical Channels

The concept of logical channels and their function is central to the transport and transmission of data through the IBOC system. A logical channel is a signal path that conducts Layer 1 PDUs through Layer 1 with a specified grade of service. Logical channels are specified in [2]. In Figure 4 the logical channels are denoted by symbols such as P1, PIDS, etc. The underscore indicates that the data in the logical channel is formatted as a vector.

4.1.4 Channel Coding

Channel coding comprises the functions of scrambling, channel encoding, and interleaving shown in Figure 3 and specified in [2].

4.1.4.1 Scrambling

This function randomizes the digital data in each logical channel to “whiten” and mitigate signal periodicities when the waveform is demodulated in a conventional analog AM demodulator. The bits in each logical channel are scrambled to randomize the time-domain data and aid in receiver synchronization. The inputs to the scramblers are the active logical channels from Layer 2, as selected by

[5] Note that Figure 4 is identical to Figure 4-1 of [2].

the service mode. The outputs of the scramblers are transfer frames of scrambled bits for each of the active logical channels. The scrambler generates a pseudorandom code which is modulo 2 summed with the input data vectors. The code generator is a linear feedback shift register.

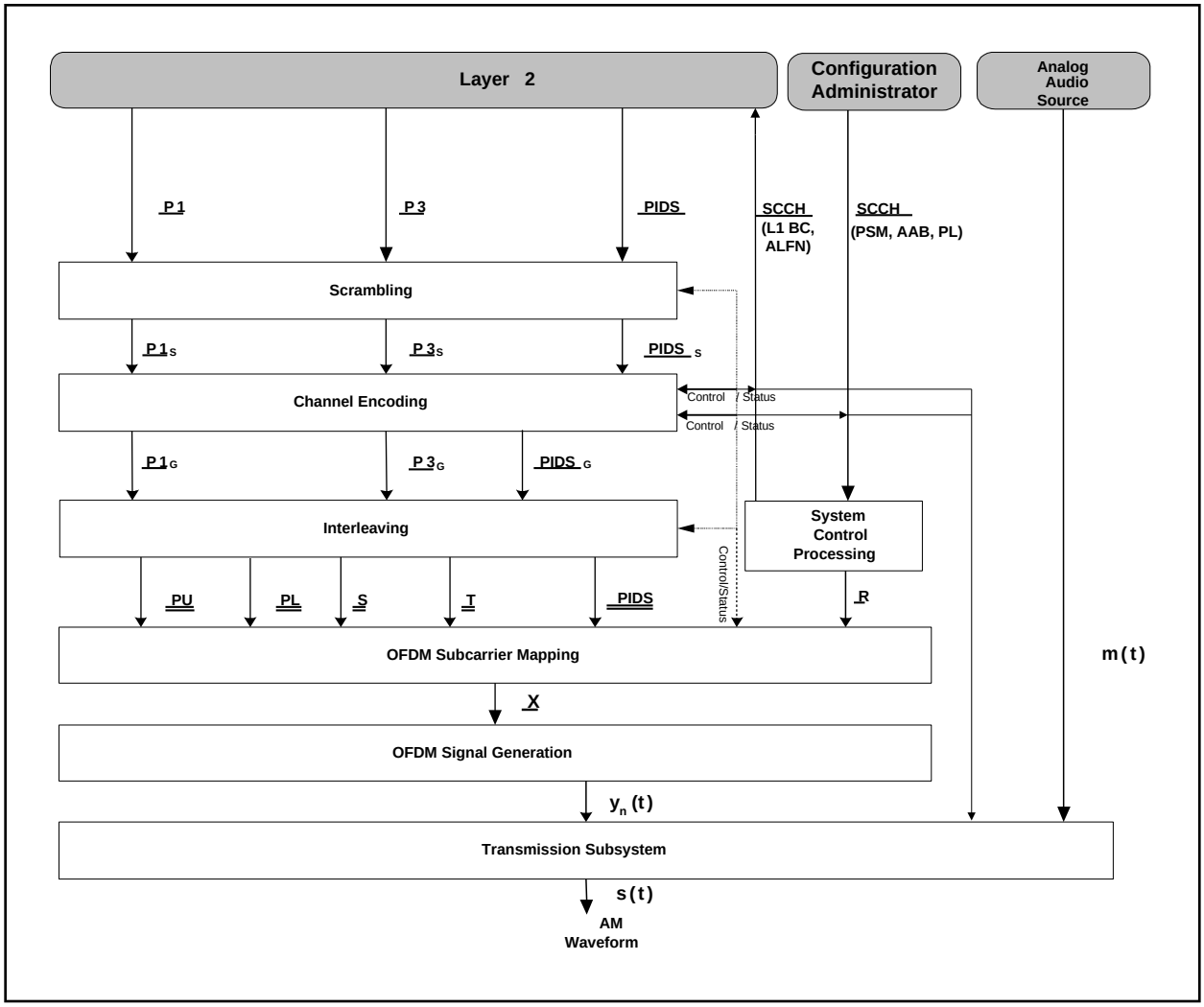

Figure 4: AM band air interface Layer 1 functional block diagram with details of data flow illustrated

4.1.4.2 Channel Encoding

Channel encoding improves system performance by increasing the robustness of the signal in the presence of channel impairments. The channel encoding process is characterized by punctured convolutional encoding.

Punctured convolutional encoding is applied to each logical channel in the RF/transmission subsystem for forward error correction. Several different encoding polynomials and puncture matrices are used. Different logical channels have different code rates. The specification of the forward error correction coding used for each logical channel and each service mode is contained in [2].

4.1.4.3 Interleaving

Interleaving is also applied to the logical channels in the RF/transmission subsystem. The interleaving process provides both time and frequency diversity. The manner in which diversity delay (time) is applied to these logical channels is specified in [2] for each service mode. The delay provides time diversity to the affected logical channels. If applied, the value of the diversity delay is a fixed value.

Interleaving is comprised of four primary operations: subframe generation, delay for diversity, transmit time alignment, and bit mapping. These operations are applied to logical channels P1, P3, and PIDS starting with subframe generation (see Figure 5).[6] Subframe generation creates new logical channels in which the incoming information has been redistributed. Some subframes are passed to delay buffers, creating the diversity delay path which results in main and backup streams. The final step is for the bit mapper to disperse the sequential subframe data to specific non-sequential locations in the interleaver output matrices. This bit mapping results in a new set of logical channels that pass this now-interleaved information to the OFDM subcarrier generation process. The interleaving processes for each service mode, and parameters for each block, are specified in Section 10 of [2].

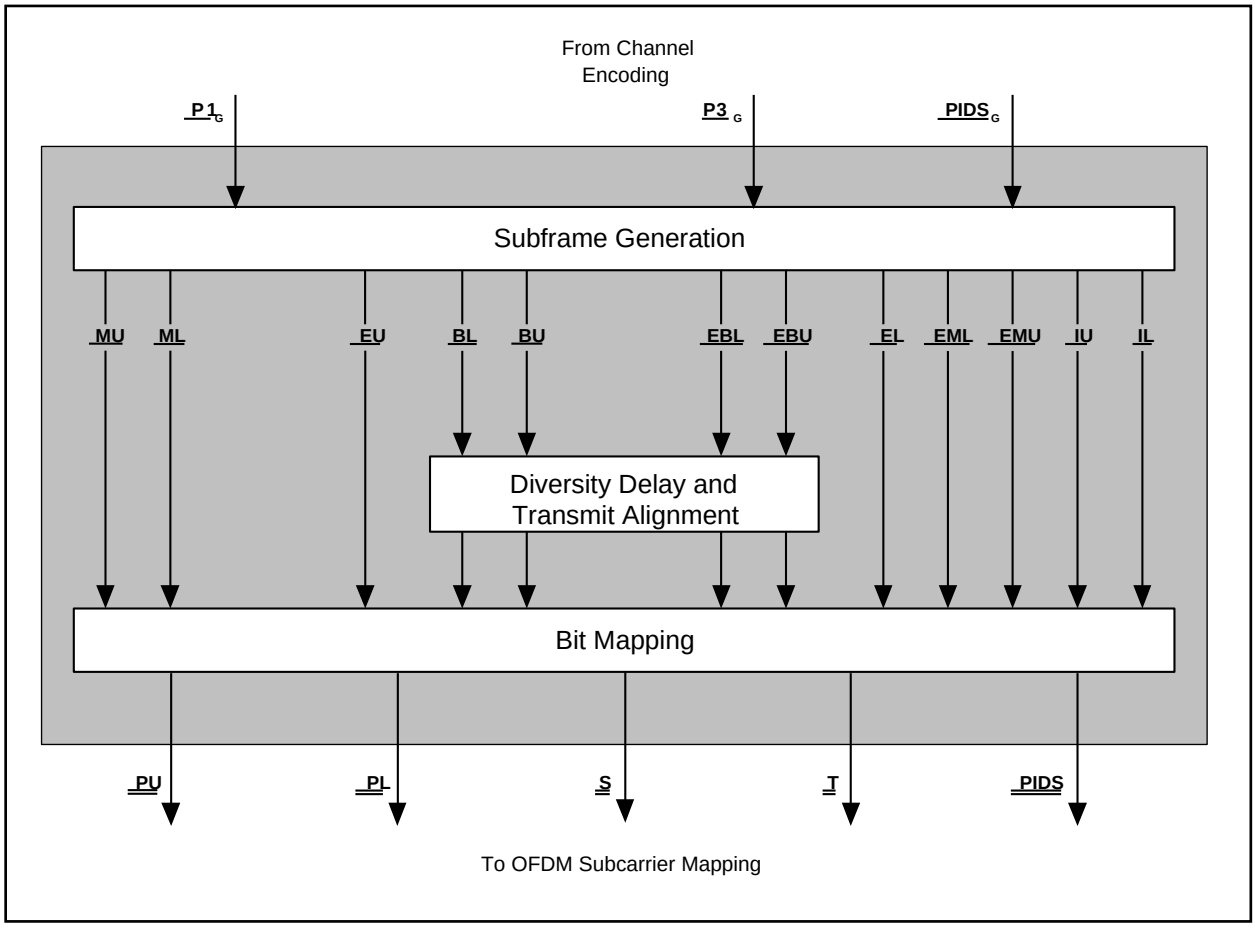

Figure 5: Interleaving conceptual block diagram

[6] Note that Figure 5 is essentially the same as Figure 10-1 of [2].

4.1.5 System Control Processing

As shown in Figure 3, the system control channel (SCCH) bypasses the channel coding. Under the direction of the system configuration settings, system control processing assembles and differentially encodes a sequence of bits (system control data sequence) destined for each reference subcarrier, as shown in Figure 6.[7] There are 2 reference subcarriers at specific carrier offsets in the OFDM spectrum. This processing is specified in Section 11 of [2].

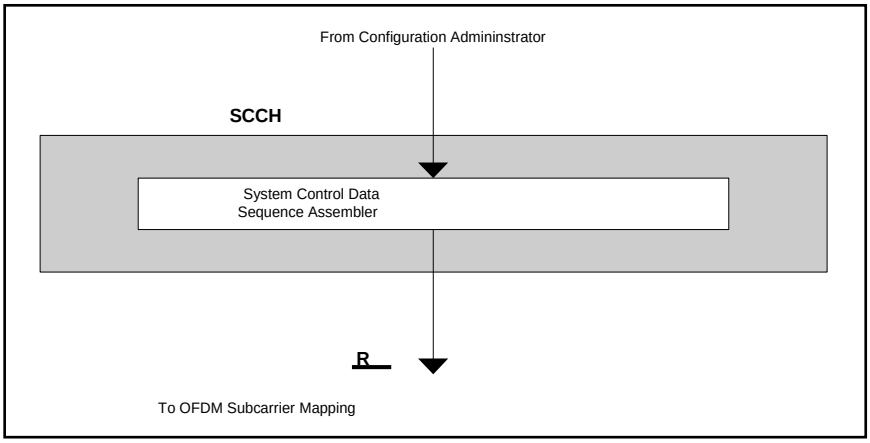

Figure 6: System control processing conceptual diagram

4.1.6 Subcarrier Mapping and Modulation

OFDM subcarrier mapping assigns interleaver partitions to frequency partitions. For each active interleaver matrix, OFDM subcarrier mapping assigns a row of bits from each interleaver to its respective frequency carrier and constellation value in the complex output vector X. In addition, system control data sequence bits from a row of R are mapped to the active reference subcarrier locations in X. The service mode dictates which interleaver matrices and which elements of R are active. Figure 7 shows the inputs, output, and component functions of OFDM subcarrier mapping.[8]

The inputs to OFDM subcarrier mapping for each symbol are a row of bits from each active interleaver matrix and a row of bits from R, the matrix of system control data sequences. The output from OFDM subcarrier mapping for each OFDM symbol is a single complex vector, X, of length 163.

The interleaver matrices carrying the user audio and data (PU, PL, S, T, PIDS) are mapped to scaled quadrature phase shift keying (QPSK), 16-QAM, or 64-QAM constellation points and to specific subcarriers. The R matrix is mapped to binary phase shift keying (BPSK) constellation points and the reference subcarriers. These phasors are then scaled in amplitude and then mapped to their assigned OFDM subcarriers. This process results in a vector, X, of phasors which are output to the OFDM signal generation function. This processing is specified in Section 12 of [2].

[7] Note that Figure 6 is identical to Figure 11-1 of [2].
[8] Note that Figure 7 is identical to Figure 12-1 of [2].

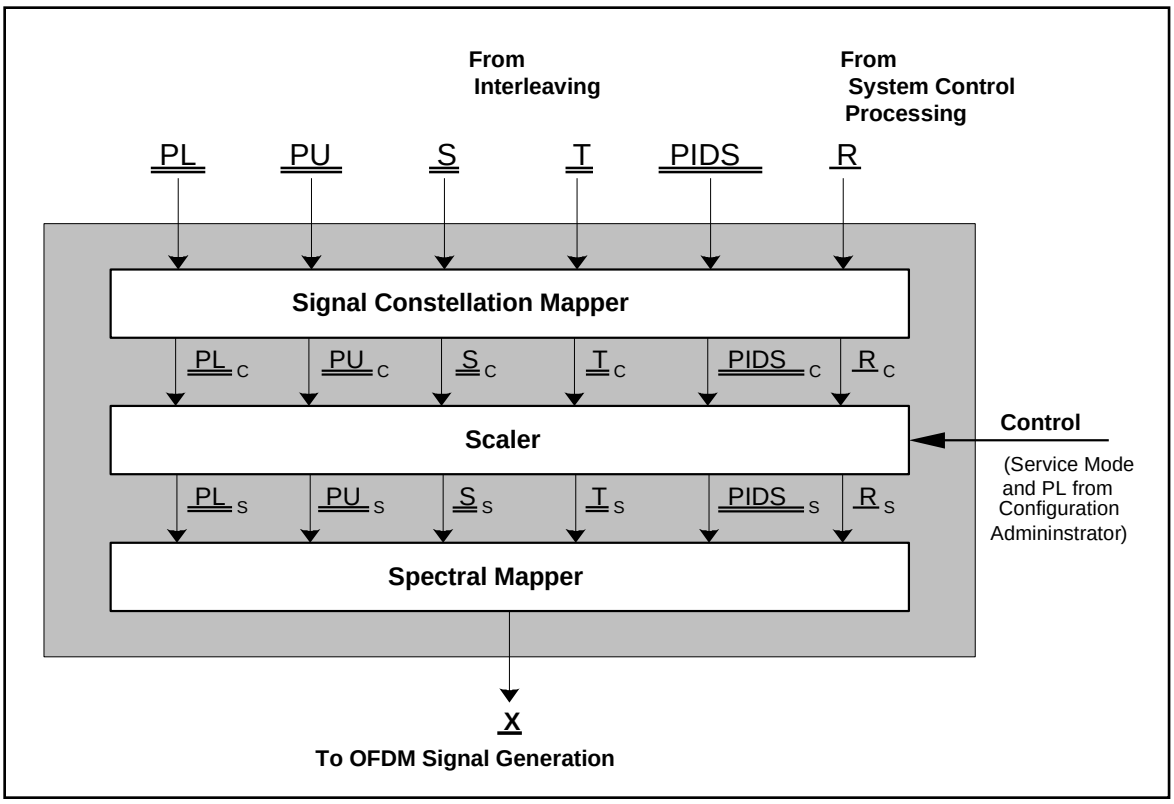

Figure 7: OFDM subcarrier mapping functional block diagram

4.1.7 Transmission

OFDM signal generation receives complex, frequency-domain OFDM symbols from OFDM subcarrier mapping, and outputs time-domain pulses representing the digital portion of the AM band IBOC signal.

The input to OFDM signal generation for the nth symbol is a complex vector $\underline{X}_n$ of length L, representing the complex constellation values for each OFDM subcarrier in OFDM symbol n. For notational convenience, the output of OFDM subcarrier mapping described above did not use the subscript n. Rather, it referred to the vector $\underline{X}$ as representing a single OFDM symbol. In this section, the subscript is appended to $\underline{X}$ because of the significance of n to OFDM signal generation. The OFDM symbol is transformed to the time domain by a discrete Fourier transform and shaped to create one time domain symbol, $y_n(t)$. The output of OFDM signal generation is a complex, baseband, time-domain pulse $y_n(t)$, representing the digital portion of the AM band IBOC signal for OFDM symbol n.

The $y_n(t)$ symbols are concatenated to form a continuous time domain waveform. The waveform is then spectrally mapped and frequency partitioned across the set of OFDM subcarriers. This OFDM waveform is combined (summed) with the amplitude modulated (AM) waveform $a_n(t)$ (in the hybrid mode) to create $z_n(t)$. This waveform is upconverted to create the complete IBOC RF waveform for transmission. This is illustrated in Figure 8.[9]

The key transmission specifications for the AM band IBOC RF waveform are detailed in [8], including carrier frequency and channel spacing, synchronization tolerances, analog host performance, spectral emission limits, digital sideband levels for both symmetric and asymmetric sideband operation, analog bandwidth, analog modulation level, phase noise, error vector magnitude, gain flatness, amplitude and phase symmetry, and group delay flatness.

[9] Note that Figure 8 is identical to Figure 14-1 of [2].

There are several issues of time alignment that the transmission system must address. For transmit facilities so equipped, every L1 frame transmitted must be properly aligned with GPS time. Also, the various logical channels must be properly aligned with each other and in some service modes some channels are purposely delayed by a fixed amount to accommodate diversity combining at the receiver. Layer 1 provides for the time alignment of the transfer frames received from the channel multiplex. The higher protocol layers provide alignment of the contents of the transfer frames.

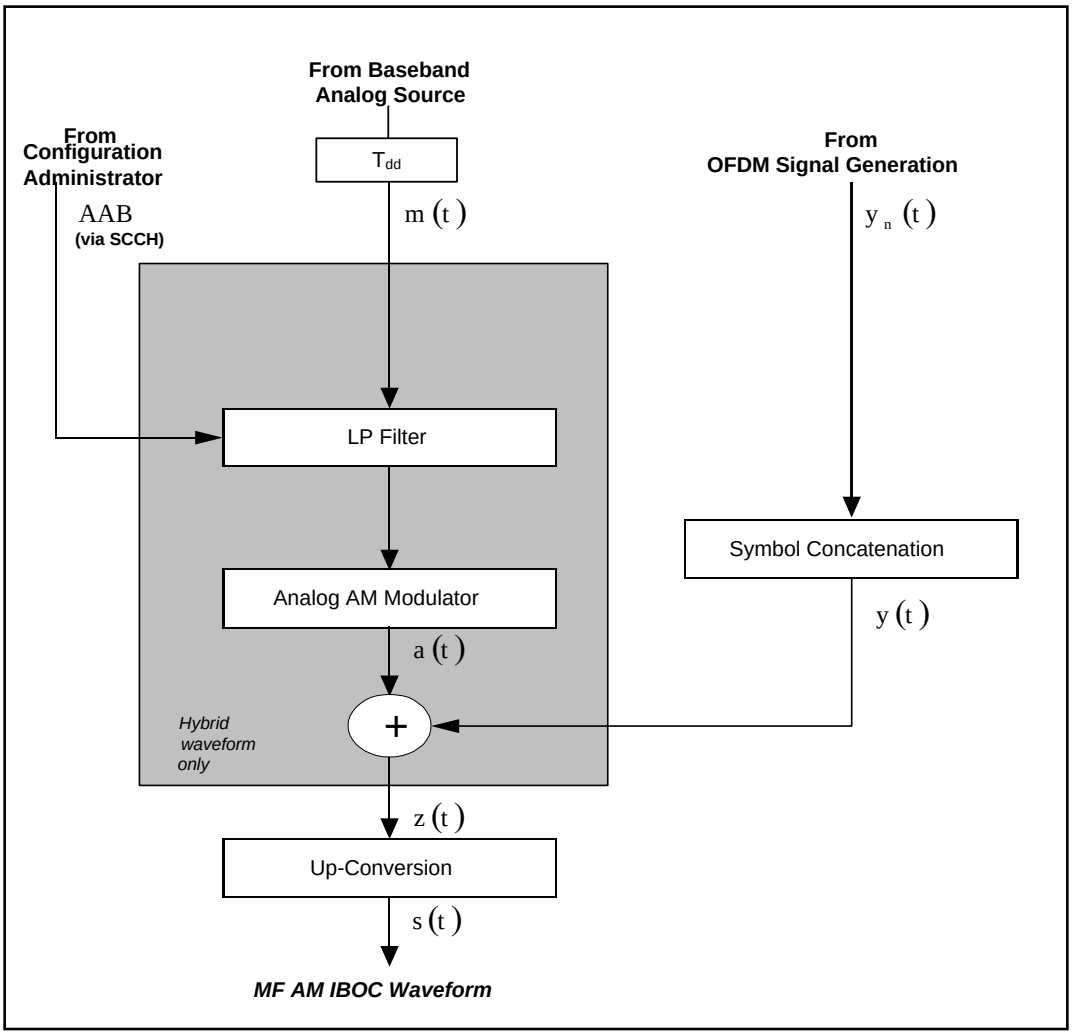

Figure 8: Hybrid transmission subsystem functional block diagram

4.1.8 Spectrum Emissions Limits for AM Band IBOC

For hybrid transmissions utilizing the 5 kHz analog bandwidth configuration, noise and spuriously generated signals from all sources, including phase noise and intermodulation products, shall conform to the limits as described in Section 4.5.1 of [8] and shown in Figure 9. [10]

[10] Note that Figure 9 is identical to Figure 4-1 of [2].

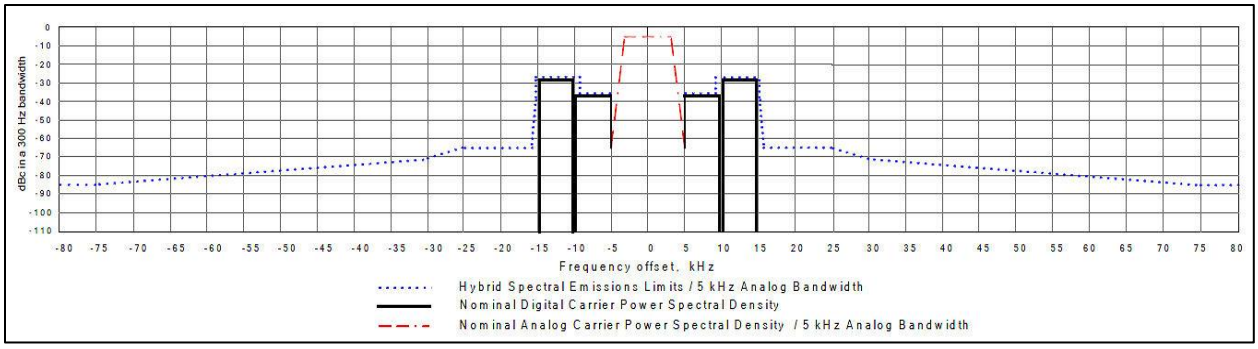

Figure 9. NRSC-5 AM band hybrid waveform spectral emissions limits for 5 kHz analog bandwidth configuration

For hybrid transmissions utilizing the 8 kHz analog bandwidth configuration, noise and spuriously generated signals from all sources, including phase noise and intermodulation products, shall conform to the limits as described in Section 4.5.2 of [8] and shown in Figure 10.[11]

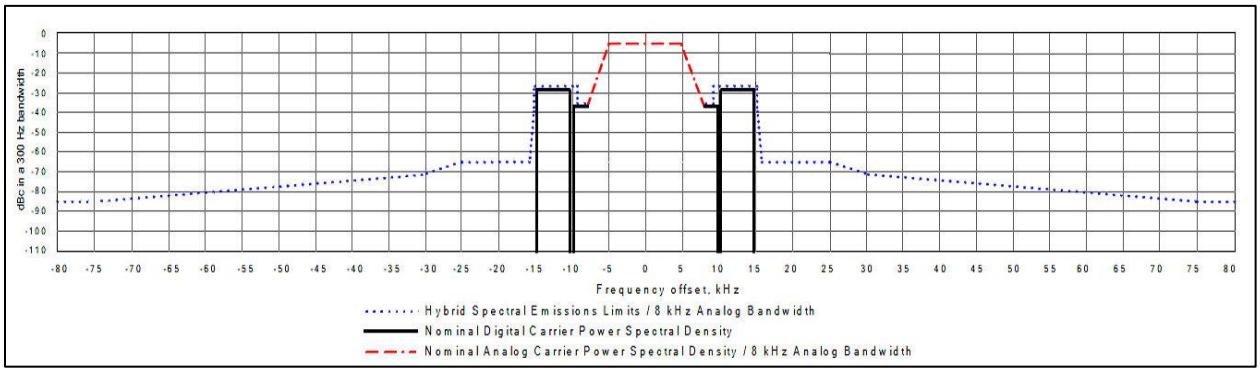

Figure 10. NRSC-5 AM band hybrid waveform spectral emissions limits for 8 kHz analog bandwidth configuration

For hybrid transmissions utilizing the reduced digital bandwidth configuration, noise and spuriously generated signals from all sources, including phase noise and intermodulation products, shall conform to the limits as described in Section 4.5.3 of [8] and shown in Figure 11.[12]

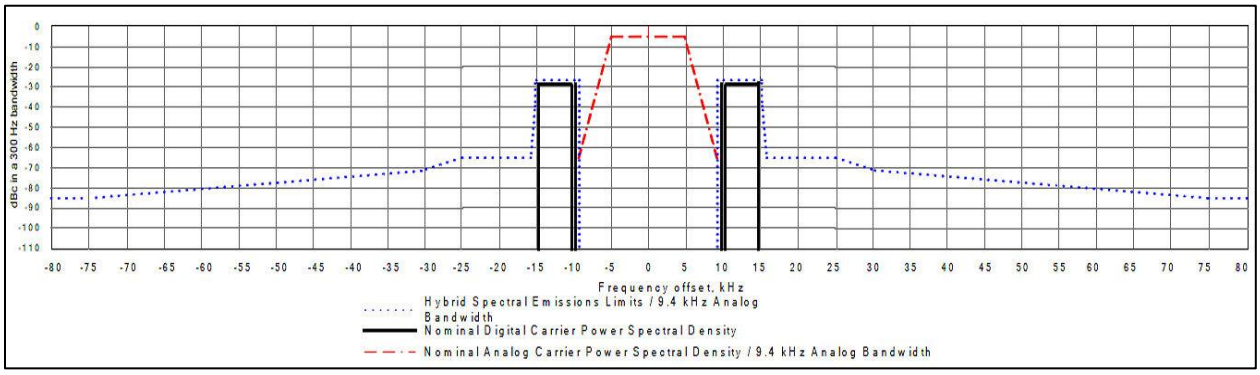

Figure 11 NRSC-5 AM band hybrid waveform spectral emission limits for reduced digital bandwidth configuration

[11] Note that Figure 10 is identical to Figure 4-2 of [2].
[12] Note that Figure 11 is identical to Figure 4-3 of [2].

For all-digital transmissions, noise and spuriously generated signals from all sources, including phase noise and intermodulation products, shall conform to the limits as described in Section 4.5.4 of [8] and shown in Figure 12.[13]

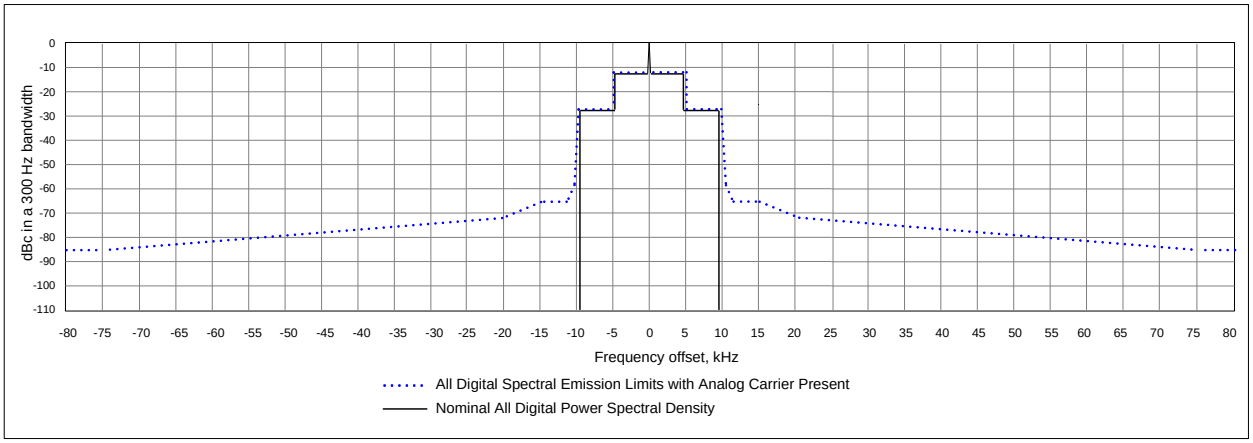

Figure 12. NRSC-5 AM band all-digital waveform spectral emissions limits

The requirements for noise and spurious emission limits illustrated in Figures 9-11 reflect acceptable performance criteria. In certain circumstances, additional measures (filtering, active emissions suppression, etc.) may be needed to reduce the spectral emissions below the limits given in this subsection in order to reduce mutual interference between broadcast stations.

4.1.8.1 Measurement of mask compliance for AM Band IBOC systems

Reference document [8] specifies a method for determining spectral emission mask compliance for AM band hybrid (5 kHz, reduced digital bandwidth, and 8 kHz analog configurations) and AM band all-digital IBOC, in Sections 4.5.1, 4.5.2, 4.5.3, and 4.5.4, respectively. For more detailed information on mask compliance measurements refer to [14]. Included in this reference are detailed measurement procedures applicable to different types of measurements (*e.g.*, factory test, in-service out-of-band emissions), as well as recommended locations for making measurements depending upon the specifics of a particular implementation.

4.2 FM Band RF/transmission System Characteristics

This section specifies the RF portion of the NRSC-5 IBOC Digital Radio Broadcasting Standard for FM band implementations. Figure 13 illustrates how the Standard is partitioned according to protocol layer and is annotated with the referenced documents that specify the associated detailed requirements. It is an overview of the entire FM band implementation of the NRSC-5 IBOC Digital Radio Broadcasting Standard.

[13] Note that Figure 12 is identical to Figure 4-4 of [2].

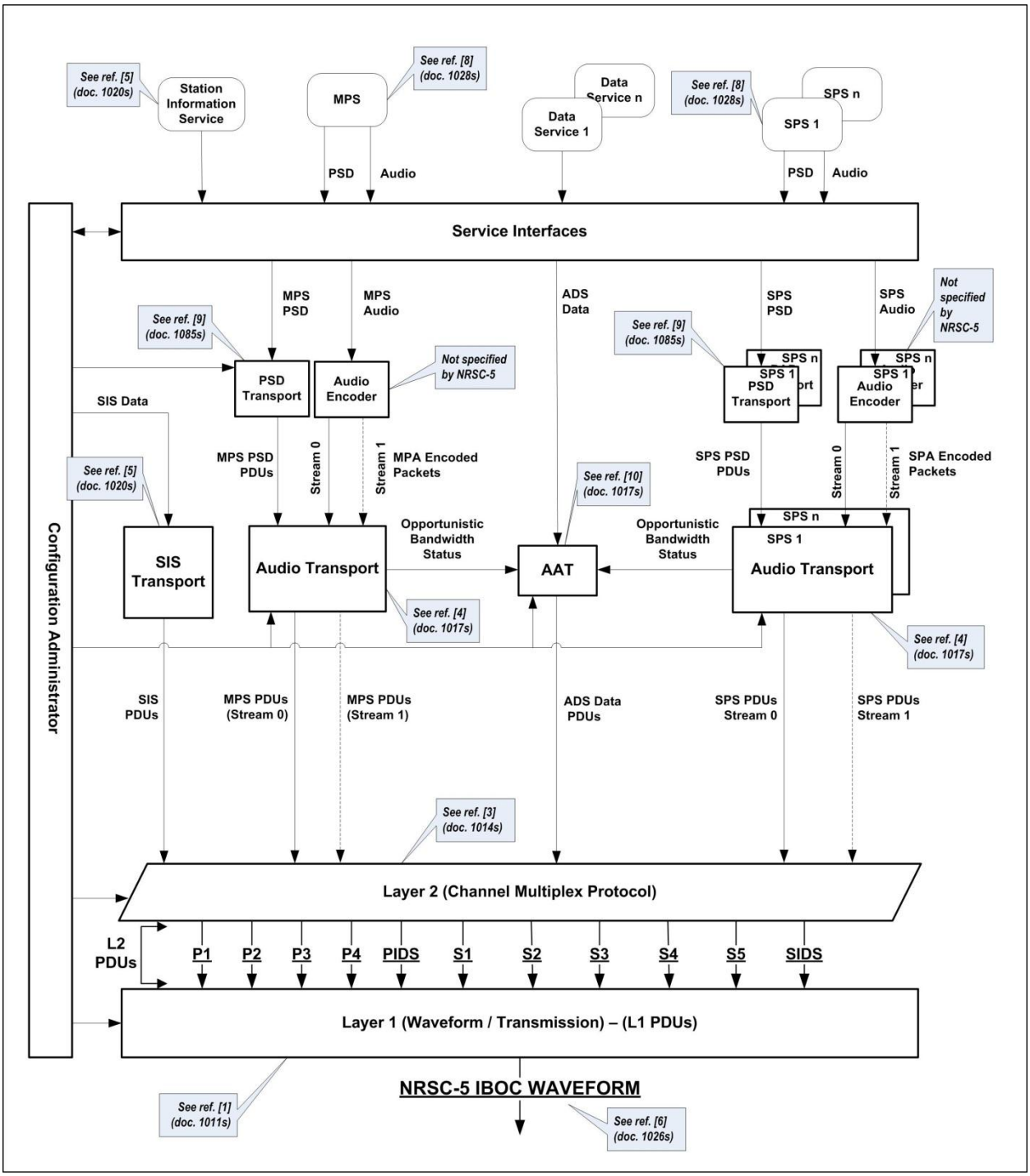

Figure 13: FM band implementation of NRSC-5 IBOC digital radio broadcasting standard

4.2.1 Transmission Characteristics

This section includes a high-level description of each Layer 1 functional block and the associated signal flow. Figure 14 is a top level block diagram of the RF/transmission subsystem illustrating the order of

processing therein. Figure 15 is a functional block diagram of Layer 1 processing.[14] Audio and data are passed from the higher protocol layers to the physical layer, the modem, through the Layer 2 - Layer 1 interface.

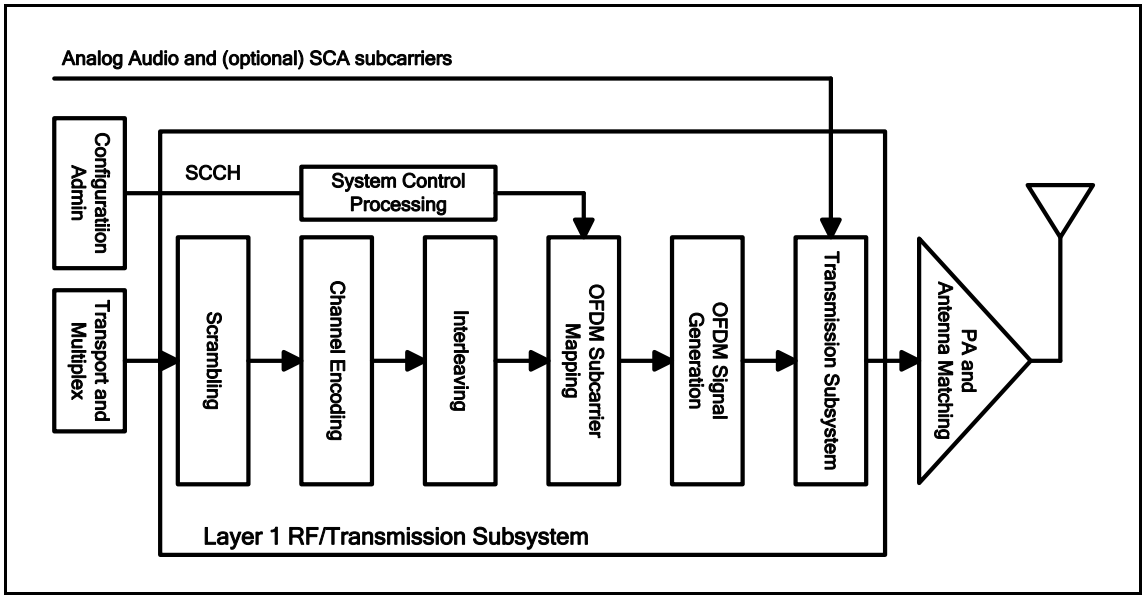

Figure 14: RF/transmission subsystem block diagram

4.2.2 Layer 1 Interface

The Layer 1 interface illustrates the access points between the channel multiplex and Layer 1 of the system protocol stack. Data enters Layer 1 as discrete transfer frames, with unique size and rate determined by the service mode, as specified in [1]. Transfer frames that carry information from the channel multiplex are referred to as L1 PDUs.

4.2.3 Logical Channels

The concept of logical channels and their function is central to the transport and transmission of data through the IBOC system. A logical channel is a signal path that conducts Layer 1 PDUs through Layer 1 with a specified grade of service. Logical channels are specified in [1]. In Figure 15 the logical channels are denoted by symbols such as P1, PIDS, S1, etc. The underscore indicates that the data in the logical channel is formatted as a vector.

4.2.4 Channel Coding

Channel coding comprises the functions of scrambling, channel encoding, and interleaving shown in Figure 14 and specified in [1].

[14] Note that Figure 15 is identical to Figure 4-1 of [1].

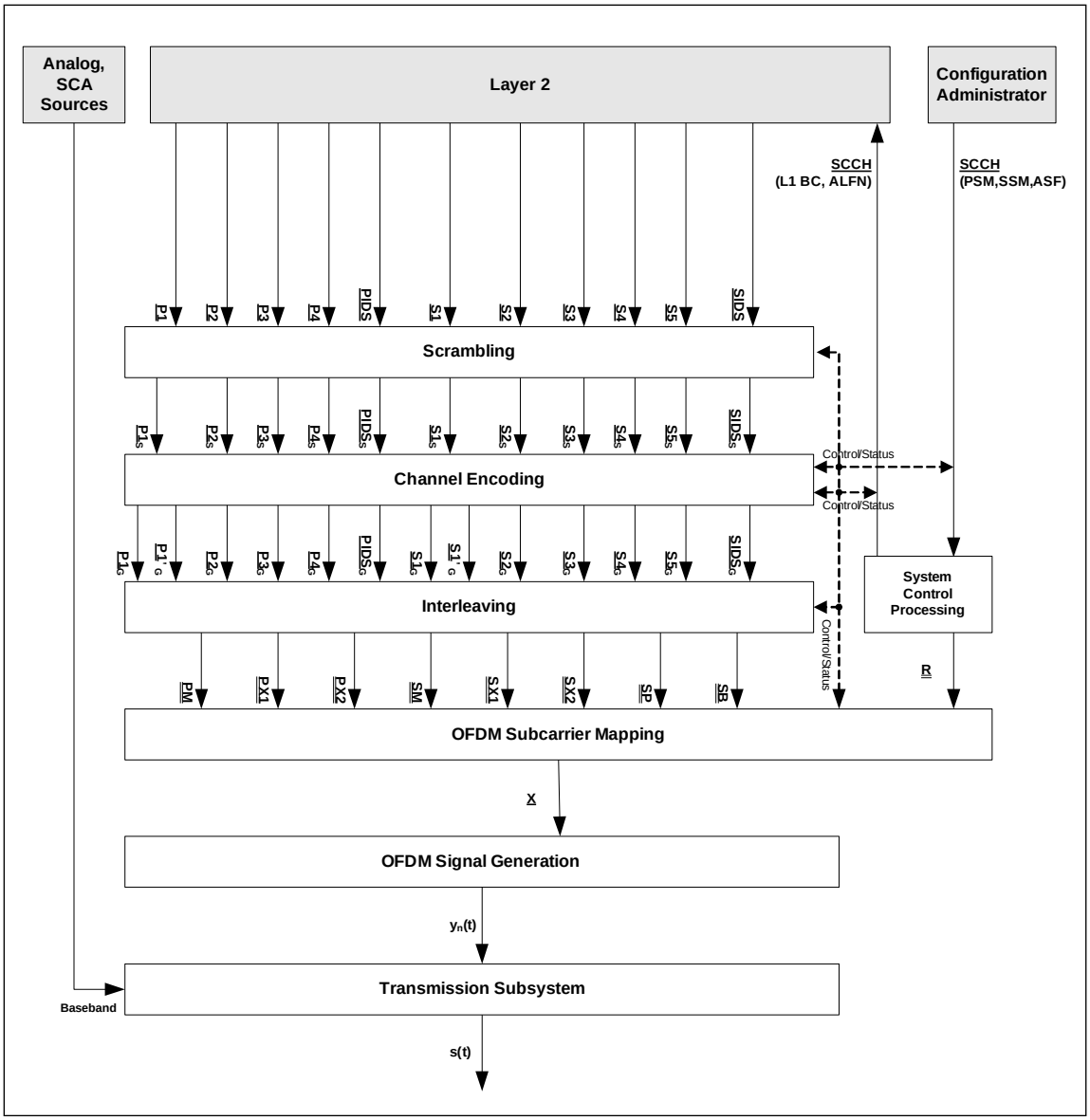

Figure 15: FM band air interface Layer 1 functional block diagram with details of data flow illustrated

4.2.4.1 Scrambling

This function randomizes the digital data in each logical channel to “whiten” and mitigate signal periodicities when the waveform is demodulated in a conventional analog FM demodulator. The bits in each logical channel are scrambled to randomize the time-domain data and aid in receiver synchronization. The inputs to the scramblers are the active logical channels from Layer 2, as selected by the service mode. The outputs of the scramblers are transfer frames of scrambled bits for each of the active logical channels. The scrambler generates a pseudorandom code which is modulo 2 summed with the input data vectors. The code generator is a linear feedback shift register.

4.2.4.2 Channel Encoding

Channel encoding improves system performance by increasing the robustness of the signal in the presence of channel impairments. The channel encoding process is characterized by two main operations: time delay (for diversity delay and transmit alignment) and punctured convolutional encoding.

Depending on the service mode, logical channels P1 and S1 may be split into two channels and delayed as they enter the channel encoding process. The manner in which diversity delay is applied to these logical channels for each service mode is specified in [1]. The delay provides time diversity to the affected logical channels. If applied, the value of the diversity delay is a fixed value.

Punctured convolutional encoding is applied to each logical channel in the RF/transmission subsystem for forward error correction. Several different encoding polynomials and puncture matrices are used. Different logical channels have different code rates. The specification of the forward error correction coding used for each logical channel and each service mode is contained in [1].

4.2.4.3 Interleaving

Interleaving is also applied to the logical channels in the RF/transmission subsystem. Interleaving comprises six parallel interleaving processes (IPs): PM, PX, SM, SX, SP, and SB (see Figure 16).[15] An IP contains one or more interleavers, and, in some cases, a transfer frame multiplexer. The service mode determines which inputs and IPs are active at any given time. The universe of inputs for interleaving are the channel-encoded transfer frames from the primary logical channels P1 through P4 and PIDS, and the secondary logical channels S1 through S5 and SIDS. The interleaver outputs are matrices. The interleaving processes for each service mode are specified in Section 10 of [1].

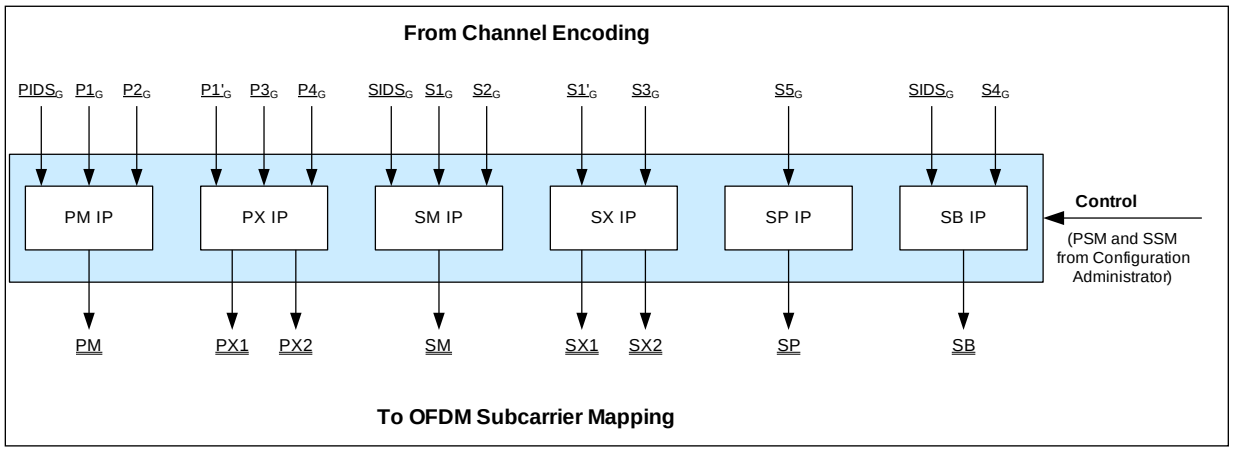

Figure 16: Interleaving conceptual block diagram

4.2.5 System Control Processing

As shown in Figure 15, the system control channel (SCCH) bypasses the channel coding. Under the direction of the system configuration settings, system control processing assembles and differentially encodes a sequence of bits (system control data sequence) destined for each reference subcarrier, as shown in Figure 17.[16] There are up to 61 reference subcarriers, numbered 0 … 60, distributed throughout the OFDM spectrum. The number of reference subcarriers broadcast in a given waveform depends on the service mode; however, system control processing always outputs all 61 system control data sequences, regardless of service mode. This processing is specified in Section 11 of [1].

[15] Note that Figure 16 is identical to Figure 10-1 of [1].
[16] Note that Figure 17 is identical to Figure 11-1 of [1].

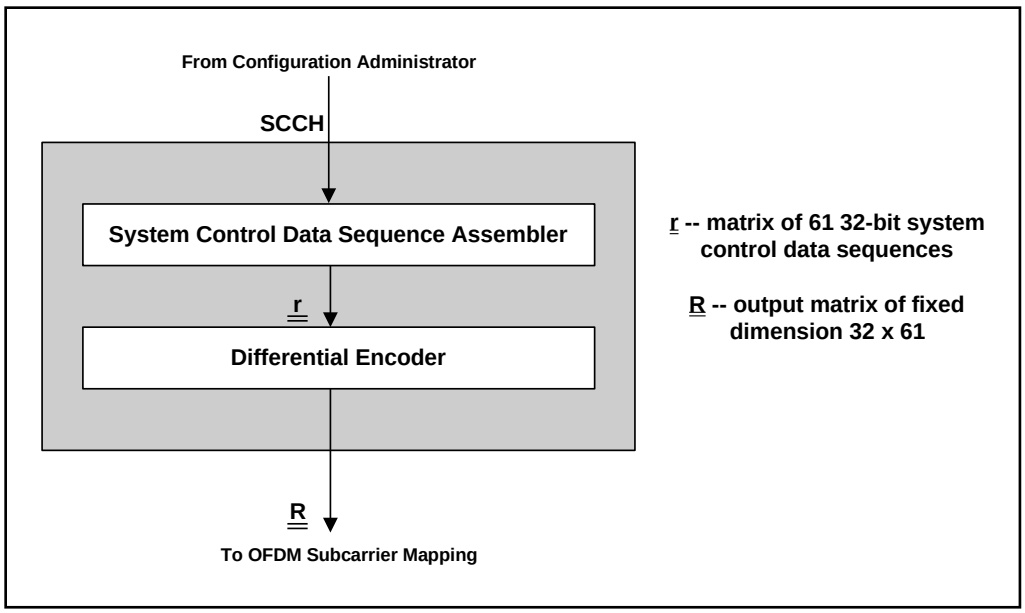

Figure 17: System control processing conceptual diagram

4.2.6 Subcarrier Mapping and Modulation

OFDM subcarrier mapping assigns interleaver partitions to frequency partitions. For each active interleaver matrix, OFDM subcarrier mapping assigns a row of bits from each interleaver partition to its respective frequency partition in the complex output vector X. In addition, system control data sequence bits from a row of R are mapped to the active reference subcarrier locations in X. The service mode dictates which interleaver matrices and which elements of R are active. Figure 18 shows the inputs, output, and component functions of OFDM subcarrier mapping.[17]

The inputs to OFDM subcarrier mapping for each symbol are a row of bits from each active interleaver matrix and a row of bits from R, the matrix of system control data sequences. The output from OFDM subcarrier mapping for each OFDM symbol is a single complex vector, X, of length 1093.

The interleaver matrices carrying the user audio and data (PM, PX1, … SB) are mapped to quadrature phase shift keying (QPSK) constellation points and to specific subcarriers. The R matrix is mapped to binary phase shift keying (BPSK) constellation points and the reference subcarriers. These phasors are then scaled in amplitude and then mapped to their assigned OFDM subcarriers. This process results in a vector, X, of phasors which are output to the OFDM signal generation function. This processing is specified in Section 12 of [1].

4.2.7 Transmission

OFDM signal generation receives complex, frequency-domain OFDM symbols from OFDM subcarrier mapping, and outputs time-domain pulses representing the digital portion of the FM band IBOC signal.

The input to OFDM signal generation for the nth symbol is a complex vector X_n of length L, representing the complex constellation values for each OFDM subcarrier in OFDM symbol n. For notational convenience, the output of OFDM subcarrier mapping described above did not use the subscript n. Rather, it referred to the vector X as representing a single OFDM symbol. In this section, the subscript is appended to X because of the significance of n to OFDM signal generation. The OFDM symbol is transformed to the time domain by a discrete Fourier transform and shaped to create one time domain

[17] Note that Figure 18 is identical to Figure 12-1 of [1].

symbol, $y_n(t)$. The output of OFDM signal generation is a complex, baseband, time-domain pulse $y_n(t)$, representing the digital portion of the FM band IBOC signal for OFDM symbol n.

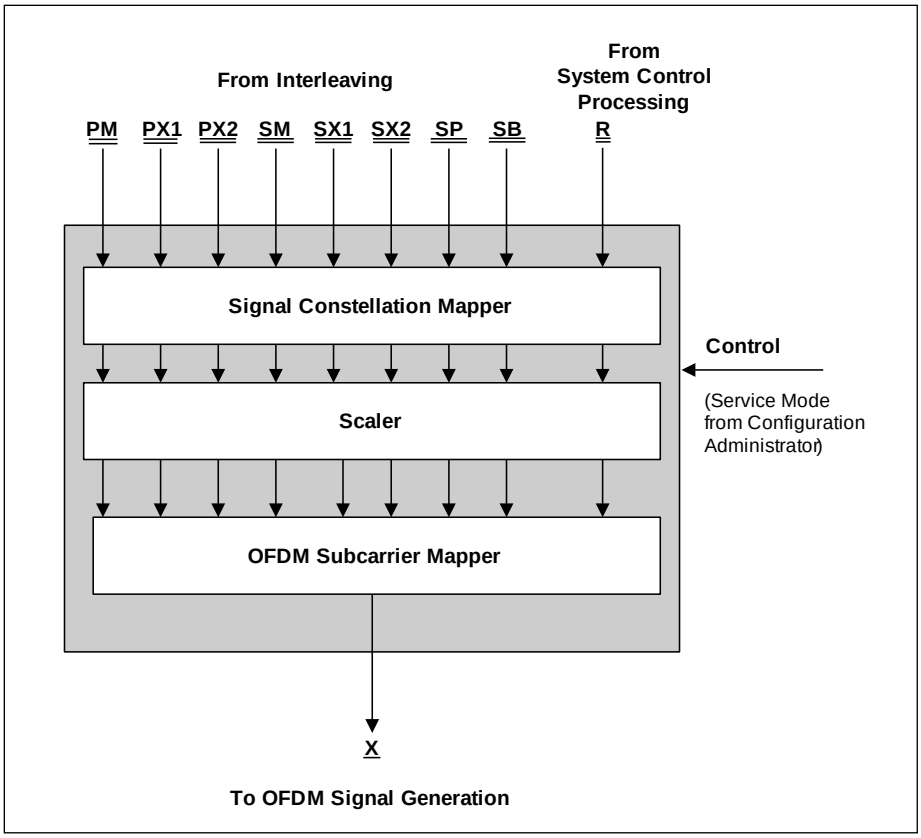

Figure 18: OFDM subcarrier mapping conceptual block diagram

The $y_n(t)$ symbols are concatenated to form a continuous time domain waveform. This waveform is upconverted and combined with the analog, FM-modulated audio (in the hybrid and extended hybrid modes) to create the complete IBOC RF waveform for transmission. This is illustrated in Figure 19.[18] The waveform is then spectrally mapped and frequency partitioned across the set of OFDM subcarriers. The key transmission specifications for the FM band IBOC RF waveform are detailed in [6], including carrier frequency and channel spacing, synchronization tolerances, spectral emission limits, digital sideband levels for both symmetric and asymmetric sideband operation, phase noise, error vector magnitude, gain flatness, and group delay flatness.

There are several issues of time alignment that the transmission system must address. For transmit facilities so equipped, every L1 frame transmitted must be properly aligned with GPS time. Also, the various logical channels must be properly aligned with each other and in some service modes some channels are purposely delayed by a fixed amount to accommodate diversity combining at the receiver. Layer 1 provides for the time alignment of the transfer frames received from the channel multiplex. The higher protocol layers provide alignment of the contents of the transfer frames.

[18] Note that Figure 19 is identical to Figure 14-2 of [1].

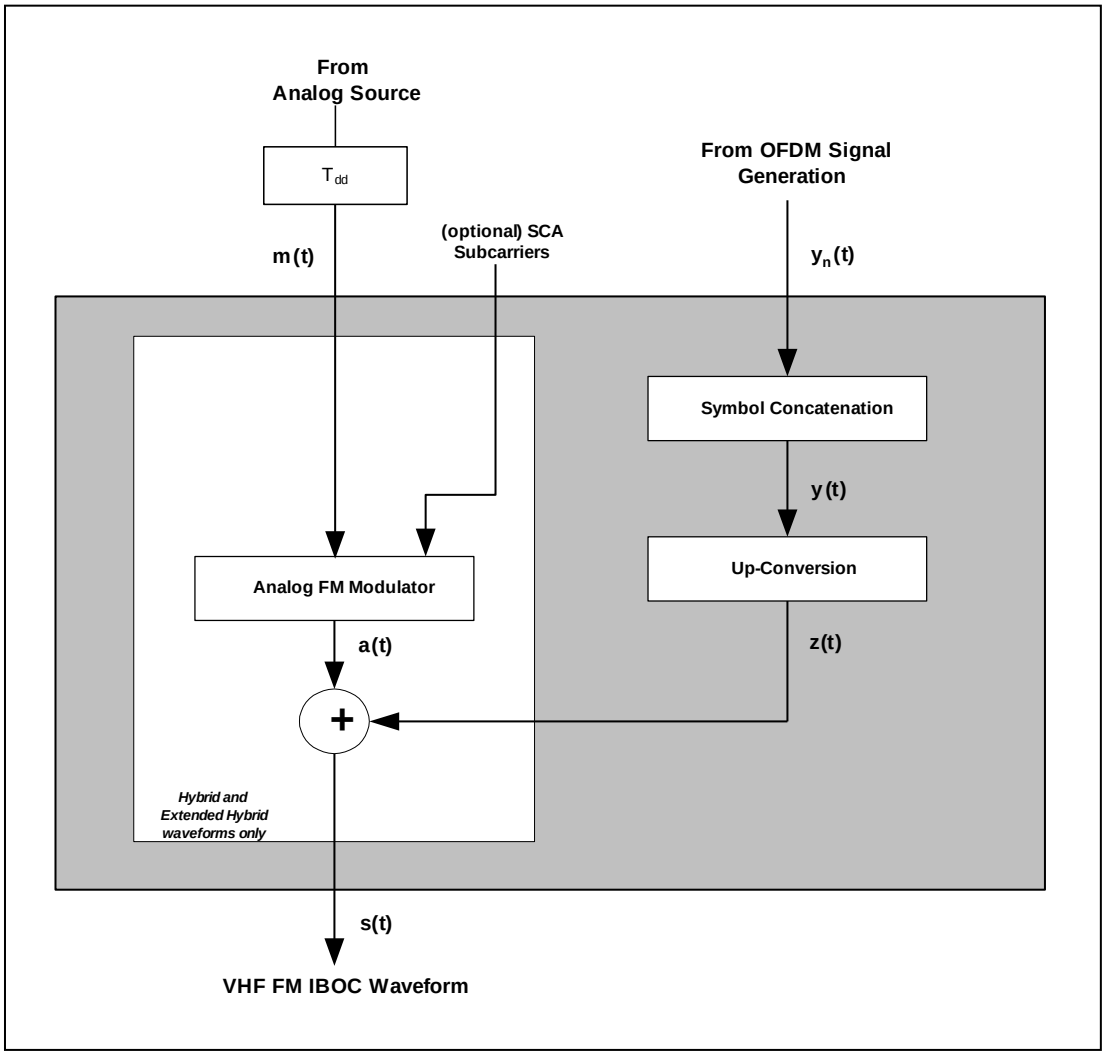

Figure 19: Hybrid/extended hybrid transmission subsystem functional block diagram

4.2.8 Spectrum Emissions Limits for FM Band IBOC

For hybrid transmissions, noise and spuriously generated signals from all sources, including phase noise and intermodulation products, shall conform to the limits as described in Section 4.4.1 of [6] and shown in Figure 20.[19]

[19] Note that Figure 20 is identical to Figure 4-1 of [6].

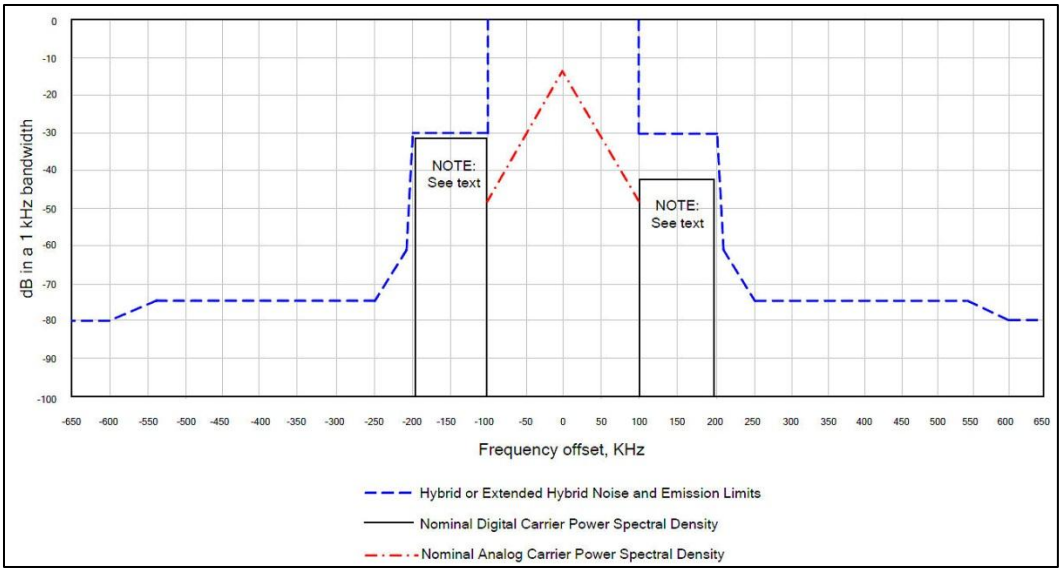

Figure 20. NRSC-5 FM band hybrid waveform noise and emission limits

NOTE: the upper and lower sidebands may differ in average power level by up to 10 dB (asymmetric sidebands). Normally, the sideband power levels are equal, but under certain scenarios, asymmetric sidebands may be useful for mitigation of adjacent channel interference. Figure 20 shows a power-level difference of 10 dB for purposes of illustration. It shall be noted that even though the upper and lower sidebands have different power levels, the upper and lower spectral emissions limits are the same.

For all-digital transmissions, noise and spuriously generated signals from all sources, including phase noise and intermodulation products, shall conform to the limits as described in Section 4.4.2 of [6] and shown in Figure 21.[20]

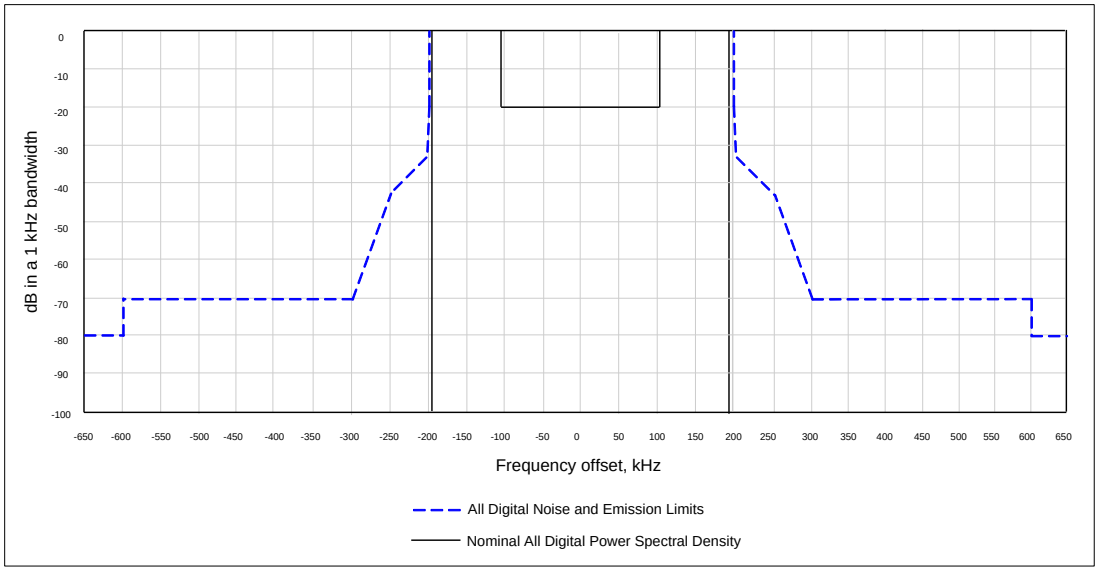

Figure 21. NRSC-5 all-digital waveform noise and emission limits

[20] Note that Figure 21 is identical to Figure 4-2 of [6].

The requirements for noise and spurious emission limits illustrated in Figure 20 and Figure 21 reflect acceptable performance criteria. In certain circumstances, additional measures (filtering, active emissions suppression, etc.) may be needed to reduce the spectral emissions below the limits given in this subsection in order to reduce mutual interference between broadcast stations.

4.2.8.1 Measurement of mask compliance for FM Band IBOC systems

Reference document [6] specifies a method for determining spectral emission mask compliance for FM band hybrid IBOC and all-digital IBOC, in Sections 4.4.1 and 4.4.2, respectively. For more detailed information on mask compliance measurements refer to [14]. Included in this reference are detailed measurement procedures applicable to different types of measurements (*e.g.*, factory test, in-service out-of-band emissions), as well as recommended locations for making measurements depending upon the specifics of a particular implementation.

5 TRANSPORT AND SERVICE MULTIPLEX CHARACTERISTICS

This Section specifies how control signals and non-audio information are passed through the IBOC digital radio broadcasting system up to, but not including the RF/transmission subsystem.

The IBOC digital radio broadcasting system specified by the NRSC-5 Standard allows a broadcast station to offer multiple services. A service can be thought of as a logical grouping of application data identified by the IBOC digital radio broadcasting system. Services are grouped into one of three categories:

1. Core services:
   a. Main Program Service (MPS), both audio (MPSA) and data (MPSD)
   b. Station Information Service (SIS)
2. Supplemental services:
   a. Supplemental Program Service (SPS), both audio (SPSA) and data (SPSD)
3. Advanced Data Services (ADS)

The flow of service content through the IBOC digital radio broadcasting system is as follows:

1. Service content enters the IBOC digital radio broadcasting system via service interfaces;
2. Content is assembled for transport using a specific protocol;
3. It is routed over logical channels via the channel multiplex;
4. It is waveform-modulated via the RF/transmission subsystem for over-the-air transmission.

Figure 2 is an overview of the AM band IBOC digital radio broadcasting system and Figure 13 is an overview of the FM band IBOC digital radio broadcasting system. The following Sections present a brief description of the IBOC digital radio broadcasting systems core, supplemental, and advanced data services framework.

5.1 Core Services Overview

5.1.1 Main Program Service (MPS)

The Main Program Service (specified in [4] and [7]) is a direct extension of traditional analog radio. There are two components to MPS – audio (MPSA) and data (MPSD). The MPS audio is carried on both the analog and digital components of the IBOC signal. IBOC receivers typically refer to the MPS channel as “HD-1.”

The IBOC system enables the transmission of existing analog radio programming in both analog and digital formats. This allows for a smooth transition from analog to digital radio. Radio receivers that are not IBOC digital radio-enabled can continue to receive the traditional analog radio signal, while IBOC digital radio-enabled receivers can receive both digital and analog signals via the same frequency band, in the same FCC-allocated channel.

IBOC receivers have the ability to “blend” from the MPS digital audio to the analog audio signal when the received signal quality is not sufficient for digital audio reception or when digital packets in the MPS PDU are corrupted.

5.1.1.1 MPS Audio

Figure 22 shows the interface of the audio transport layer to the rest of the IBOC digital radio broadcasting system.[21] The audio encoder receives input audio frames from the audio interface application and encodes the audio data.[22] The encoded audio is combined with MPS data, and sent to

[21] Note that Figure 22 is essential the same as Figure 4-1 of [4].
[22] This Standard does not specify an encoder. In order to determine the system’s viability the NRSC evaluated it using the HD Codec developed by iBiquity and Coding Technologies. See [21] and [22].

the channel multiplex (Layer 2) as an MPS protocol data unit (PDU). The MPS PDU is comprised of compressed audio and PSD. This process is specified in [4].

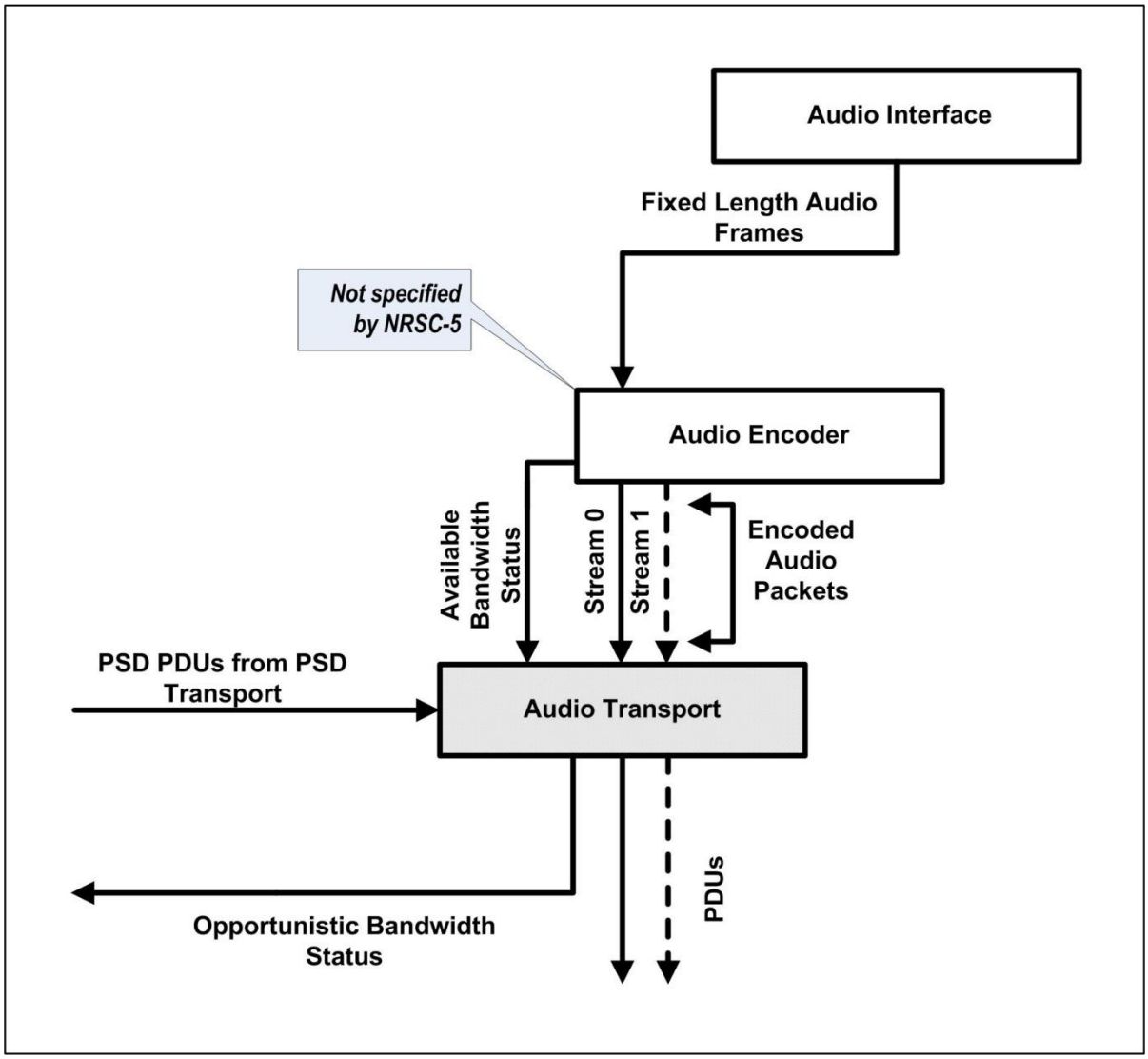

Figure 22: Audio transport interface diagram

The audio frame, packet and PDU are defined in Table 1.

Table 1. Description of MPS (or SPS) audio frame, packet and PDU

Audio frame	The unit of information payload exchanged from the audio interface and the audio codec protocol layer. Audio frames are comprised of 2048 audio samples at a sampling rate of 44.1 kHz.
Encoded audio packet	Compressed audio frames output from the audio encoder. These may be divided into one to two output streams depending on the audio encoder mode.
MPS (or SPS) PDU	This refers to the output of the audio transport process. An MPS (or SPS) PDU consists of protocol information followed by a sequence of encoded audio packets. MPS (or SPS) PDUs may be output on from one to two streams depending on the audio codec mode (see Table 6).

5.1.1.2 MPS Data Interface and Transport

The MPS allows data to be transmitted in tandem with program audio. The data is intended to describe or complement the audio program that the radio listener is hearing.

MPS data (fully specified in [7]) defines a specific set of data fields (*e.g.*, artist, title, etc.). The fields can be used for all forms of audio programming. For example, the "title" field may immediately seem to apply only to song titles. However, it also applies to titles for commercials, announcements, and talk programs.

The core fields are described in Table 2.

Table 2. Core MPS (or SPS) data fields

Field	Description
Title	One-line title name
Artist	Performer, originator, author, sponsor, show host
Album	Content source , such as album name, show name, sponsor name
Genre	Categorization of content. This is an enumerated field of predefined types, such as Jazz, Rock, Speech, etc.
Comment Title	One-line title for comment description
Comment Description	Detail description, user call-back or other information, such as talk show call in number or web-site URL.
Commercial	Collection of fields that support detailed product advertisement and purchasing, including: - Price of merchandise - Expiration data for transaction - Transaction method - URL which could be used to initiate purchase transaction via an external return channel - Advertisement description - Seller identification
Reference Identifiers	Identifiers that can be used to uniquely identify the MPS (or SPS) data message

The MPS Data is transmitted within the audio transport. The SPS transport is identical to the MPS transport. Both services contain identical header and data structures. See [7] and [9] for further details.

5.1.2 Station Information Service (SIS)

The Station Information Service (specified in [5]) provides the necessary radio station control and identification information, such as station call sign identification, and time and location reference information. SIS can be considered a built-in service that is readily available on all IBOC digital radio stations.

5.1.2.1 SIS Interface

The station information service interface allows broadcasters to transmit the information listed in Table 3.[23]

[23] Note that Table 3**Error! Reference source not found.** is identical to Table 4-1 in [5].

Table 3. Description of information transmitted by SIS

Message ID	Payload (bits)	Field	Description
0000	**32**	**Station ID Number**	Used for networking applications Consists of Country Code and FCC Facility ID
0001	**22**	**Station Name - short format**	Identifies the 4-alpha-character station call sign plus an optional extension
0010	**58**	**Station Name - long format**	Identifies the station call sign or other identifying information in the long format May consist of up to 56 alphanumeric characters Not recommended for new designs
0011	**32**	**Absolute Layer 1 Frame Number (ALFN)**	Identifies the current Absolute Layer 1 Frame Number (ALFN) Discontinued as an SIS message because ALFN is already sent serially in the "ADV ALFN" field in the SIS PDU as shown in Figure 4-1 of [5]
0100	**27**	**Station Location**	Provides the 3-dimensional geographic station location Used for receiver position determination
0101	**58**	**Station Message**	Allows a station to send an arbitrary text message
0110	**27**	**Service Information Message**	Identifies Program category of the Main and Supplemental programs Introduces the data services
0111	**22**	**SIS Parameter Message**	Carries supplementary information, including Leap Second/Time Offset and Local Time data parameters Can be used to broadcast equipment software version information
1000	**58**	**Universal Short Station Name Station Slogan**	Allows transmitting the station names up to twelve characters in length and supports international character sets
1001	**58**	**Active Radio (AR) Message**	Allows for the provision of Emergency Alerts and follow-up information Allows for the "waking up" of a receiver

5.1.2.2 SIS Transport

The SIS is sent through the IBOC digital radio broadcasting system via a dedicated logical channel. The channel multiplex routes SIS content to a dedicated SIS logical channel in the RF/transmission subsystem. For more information on the SIS transport, see [5].

5.2 Supplemental Services Overview

5.2.1 Supplemental Program Service (SPS)

The Supplemental Program Service (specified in [4] and [7]) is a direct extension of MPS in FM band IBOC digital radio broadcasting transmissions. There are two components to SPS – audio (SPSA) and data (SPSD). Since there is no analog backup of the SPS audio (as with MPS audio), IBOC receivers cannot blend to analog for SPS channels, and will mute when the received signal quality is not sufficient for digital audio reception or when digital packets in the SPS PDU are corrupted.

SPS supports the transmission of additional audio channels (in addition to the MPS) in digital format, as well as encrypted audio. This allows for additional audio programs to be broadcast on the same RF carrier, often referred to as “multicasting” or “multicast channels.” Multiple (up to 7) SPS channels or programs may be transmitted simultaneously. IBOC receivers typically refer to SPS channel as “HD-2, HD-3, etc.” The IBOC system allows broadcasters to reallocate capacity that could otherwise be used for MPS or advanced data services in order to allow for this configuration.

A station’s broadcast of SPS will not affect a receiver’s ability to receive traditional analog radio signals or MPS transmissions, even if the receiver is not SPS-enabled.

5.2.1.1 SPS Audio

Figure 22 shows the interface of the audio transport layer to the rest of the IBOC digital radio broadcasting system. The audio encoder receives input audio frames from the audio interface application and encodes the audio data.[24] The encoded audio is combined with SPS data, and sent to the channel multiplex (Layer 2) as an SPS protocol data unit (PDU). The SPS PDU is comprised of compressed audio and PSD. This process is specified in [4].

The audio frame, packet and PDU are defined in Table 1.

5.2.1.2 SPS Data Interface and Transport

The SPS allows data to be transmitted in tandem with program audio. The data is intended to describe or complement the audio program that the radio listener is hearing.

SPS data (fully specified in [7]) defines a specific set of data fields (*e.g.*, artist, title, etc.). The fields can be used for all forms of audio programming. For example, the “title” field may immediately seem to apply only to song titles. However, it also applies to titles for commercials, announcements, and talk programs.

The core fields are described in Table 2.

The SPS Data is transmitted within the audio transport. The SPS transport is identical to the MPS transport. Both services contain identical header and data structures. See [7] and [9] for further details.

5.3 Advanced Data Services (ADS) Overview

Advanced data services provide broadcasters with the ability to transmit information that may be unrelated to MPS, SIS or SPS. These services can carry any form and content that can be expressed as a data file or a data stream, including audio services. Examples of such services include (i) visual effects associated with MPS, SIS, or SPS services; (ii) multimedia presentations of stock, news, weather, and entertainment programming including audio, text and images; (iii) broadcast updates to in-vehicle systems; (iv) local storage of content for time shifting and later replay; (v) targeted advertising; (vi) traffic updates and information for use with navigation systems; and (vii) subscription or free-but-limited-access services using conditional access.

Advanced data services are carried on IBOC by the Advanced Application Services Transport (AAT). In addition to allowing multiple data applications to share the waveform/transmission medium, AAT provides a common transport mechanism. The detailed description of AAT is documented in [10].

The following sections describe the Advanced Data Services interfaces and transports.

[24] This Standard does not specify an encoder. In order to determine the system’s viability the NRSC evaluated it using the HD Codec developed by iBiquity and Coding Technologies. See [21] and [22].

5.3.1 Advanced Application Services Transport (AAT)

Figure 23 details the interface of the AAT for the NRSC-5 IBOC digital radio broadcasting system.[25] The AAT is used in the transport of fixed and opportunistic data in the IBOC system. Various advanced data services use the Service Interfaces to interact with the IBOC system. During broadcast, the AAT receives ADS data from the Service Interfaces and then encodes and encapsulates this data to generate AAT PDUs. The AAT PDUs are then sent to Layer 2 via Bearer Channels for further processing [3]. The AAT PDUs are sent over different data channels which carry fixed data and opportunistic data packets. Fixed data bandwidth is established in advance by the station operator. The opportunistic data bandwidth depends on the audio content transmitted.

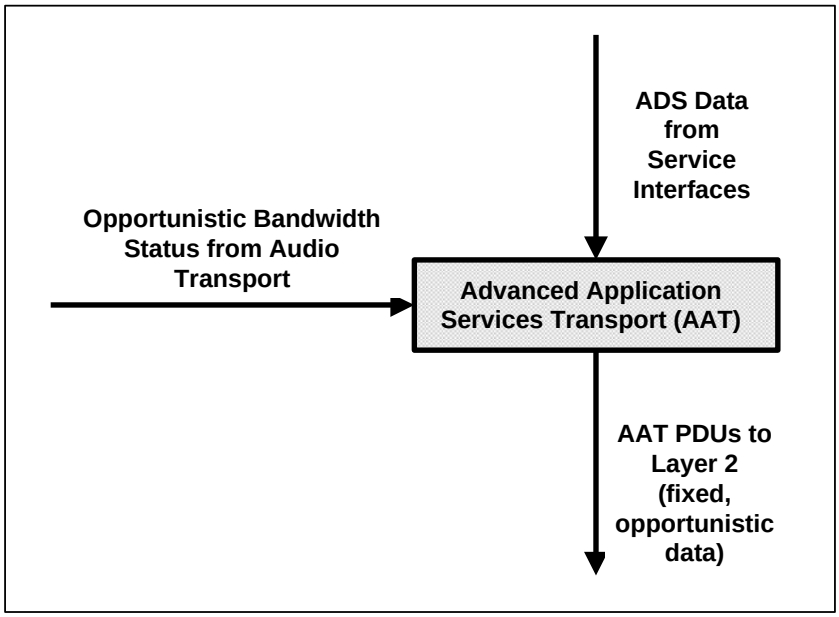

Figure 23. Advanced Data Services Protocol Interface Diagram

To send data over these channels, packets are encoded in a continuous byte stream. Successful packet delivery relies on the data channels to deliver the bytes in the same order that they were transmitted. Byte stream encoding consists of Packet Encapsulation with embedded error detection, and Forward Error Correction (FEC). The general structure of an encoded byte stream is shown below in Figure 24.[26]

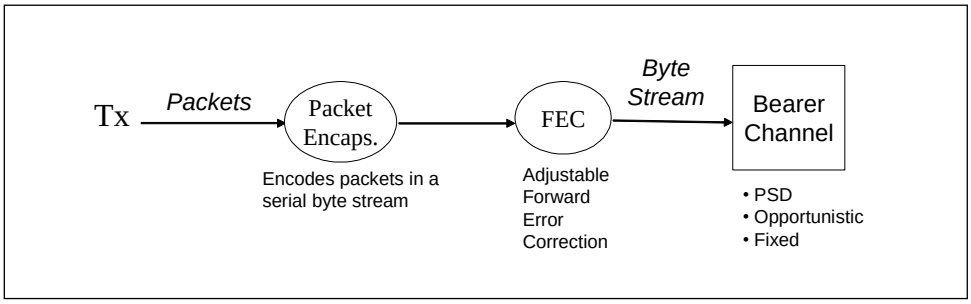

Figure 24. Byte Stream Encoding

[25] Note that Figure 23 is essentially the same as Figure 4-1 of [10].
[26] Note that Figure 24 is identical to Figure 4-5 of [10].

5.3.1.1 Packet Encapsulation

The packet encapsulation used by the AAT follows the HDLC-like framing employed by the Point-to-Point Protocol (PPP) as standardized by the IETF in [25]. The HDLC-like framing allows encapsulation of a packet referred to as an AAT PDU, within a byte stream, that may be sent in segments of arbitrary size (*e.g.*, in each L1 frame) as specified in [1] and [2].

The contents of the encapsulated packet are described in Table 4.

Table 4. Description of AAT packet encapsulation

Flag	Delimiter to indicate start of next protocol data unit
Data Transport Packet Format (DTPF)	Identifier to define the format for the data packet
Port Identification	Identifier to indicate to the receiver which application is associated with the transmitted data
Sequence	An incremental field to track successive packets transmitted. Each port has an individual sequence
Payload	Application data. The payload may be of any size up to 8192 bytes.
Frame Check Sequence (FCS)	16-bit CRC used for error detection

5.3.1.2 Forward Error Correction (FEC)

Forward Error Correction allows for increased reliability in transmission of data applications.

5.3.1.2.1 Reed-Solomon Coding

A Reed-Solomon coder shall be included in the FEC to increase the robustness of the service by improving reliability of reception. The Reed-Solomon coder shall have a codeword size of 255 bytes with no more than 64 bytes for parity. The amount of parity shall be determined by the desired reliability and managed by the Configuration Administrator in the broadcasting system.

5.3.1.2.2 Interleaving

The FEC shall employ a convolutional byte interleaver. Interleaving randomized the occurrence of transmission errors resulting in improved reception. The byte interleaver shall map Reed-Solomon code words (255 bytes) to an interleaver matrix. The depth of the matrix shall be no greater than 64 codewords, depending on desire transmission reliability and processing delay. The depth of the interleaver is managed by the Configuration Administrator in the broadcasting system.

5.3.1.2.3 Block Synchronization

The FEC process operates on blocks of 255-bytes. A 4-byte block boundary marker (BBM) shall be regularly inserted into the stream to provide a method for receiver synchronization. The frequency of markers shall depend on the data transmission channel.

5.3.2 Transmission Channels

Encoded data packets (PDUs) shall be sent over different channels (Opportunistic or Fixed) to Layer 2 for further processing as shown in Figure 25.[27]

[27] Note that Figure 25 is essentially the same as Figure 4-2 of [10].

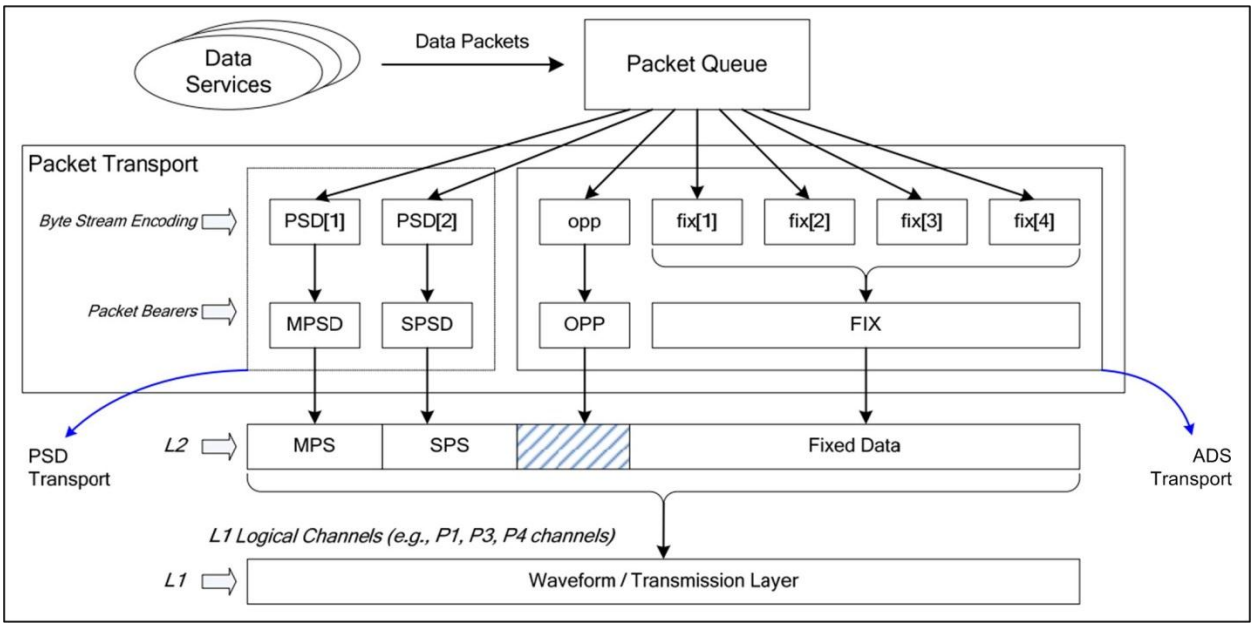

Figure 25. AAT Packet Transport Mechanism

Each transmission channel has different FEC configurations based on the level of reliability for the transmission as described in Table 5.[28]

Table 5. Description of transmission channel FEC configurations

Type	Bearer Description	Reed-Solomon	Interleaver	Block Boundary Marker Frequency
Opportunistic (OPP)	Unused bytes allocated to audio programs Variable capacity	(225,223)	None	1:1
Fixed (FIX)	Uses allocated segment(s) of L2 frame "Infinitely" variable FEC	(255,255) to (255,191)	0 to 64 Blocks	1:4

5.3.2.1 Opportunistic Channel

During silence and simple audio passages the encoded digital audio might require less than its allocated bandwidth. The Opportunistic Channel may utilize this unused capacity in the audio transport for data transmission. The size of the opportunistic payload is determined on the basis of whether the audio programs use their full allocated capacity.

A 5-byte delimiter shall be appended to the Opportunistic channel to mark the boundary between the data and the audio services.

The Reed-Solomon encoder shall have a fixed parity of 32-bytes. The interleaver is not used for this channel. This provides for robust error tolerance and minimal latency.

[28] Note that Table 5 is excerpted from Table 7-1 of [10].

5.3.2.2 Fixed Channel

When transmitted, Fixed Channel data shall be transmitted through any or all Layer 1 logical channels. Each Fixed Channel shall be subdivided into sub-channels (maximum of 4). To allow for different levels of transmission reliability, sub-channels may have different FEC settings.

Reed-Solomon parity shall be less than or equal to 64-bytes. Interleaver depth shall be less than or equal to 64 codewords. A block boundary marker shall occur every 4 codewords.

Each Fixed Channel shall contain synchronization and control information. The Fixed Channel structure is shown in Figure 26.[29]

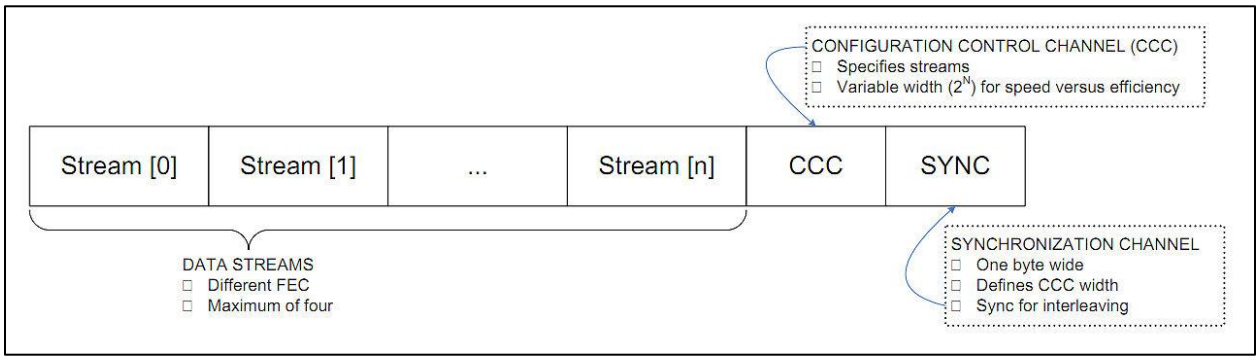

Figure 26. Fixed Channel structure

5.3.2.2.1 Configuration Control Channel

The Configuration Control Channel shall send a repeating message describing the number, width, and FEC configuration of the fixed sub-channels. The message shall be encapsulated to provide framing and error detection.

5.3.2.2.2 Synchronization Channel

A single-byte synchronization word shall transmit the timing information and width of the Configuration Control.

5.4 Channel Multiplex

The channel multiplex allows the IBOC digital radio broadcasting system to support independent transports for the following services:

1. Main program service audio and MPS data
2. Supplemental program service audio and SPS data
3. Advanced application services
4. Station information service

The channel multiplex is aware of the audio transport configuration requirements (e.g., channel mapping and bandwidth requirements). This allows for a high-level of synchronization between the analog and digital program audio streams. The channel multiplex has the flexibility to dynamically allocate unused MPS/SPS bandwidth for advanced data services.

The station information service passes through the channel multiplex without any additional processing.

[29] Note that Figure 26 is the same as Figure 7-2 in [10].

5.4.1 Interface to RF/transmission subsystem

The RF/transmission subsystem interface provides a group of logical channels. Each channel is distinguished by the following characteristics:

- Channel identifier
- Transfer frame size
- Transfer frame rate
- Channel robustness
- Channel latency

Depending on the RF/transmission service mode, the number of logical channels will vary. The channel multiplex is synchronized to the RF/transmission clock rate. The channel multiplex is signaled at each channel transmission opportunity by the RF /transmission subsystem. A complete transfer frame for each logical channel is delivered to the RF/transmission system for broadcast transmission.
For more information on the channel multiplex, see [3].

5.4.2 Configuration Administrator

Control of the IBOC digital radio broadcasting system is handled by the “configuration administrator” function as shown in Figure 2 and Figure 13. The AM band or FM band modem mode (e.g., MP1, MP2 etc.), bandwidth allocations, and specific information being sent across the logical channels (e.g., P1, P2, etc.) are controlled by the configuration administrator. This function represents the processes for communicating conditions and settings to and among the various transports and functional blocks, and will vary from implementation to implementation—its structure and detail are not specified by NRSC-5.

6 AUDIO ENCODER CHARACTERISTICS

This section specifies some of the characteristics of audio codecs designed for use with the NRSC-5 IBOC digital radio broadcasting system. As noted above, NRSC-5 does not include specifications for audio source coding and compression. Suitable audio source coding and compression systems will use perceptual audio coding or other appropriate technologies to reduce the bit rate required for description of audio signals.

6.1 Audio codec modes

Table 6 shows the audio codec mode definitions.[30]

Table 6. Audio codec mode definitions

Audio Codec Mode	Typical Use	Number of Streams	Stream ID	Stream Type (Core or Enhanced)	PDUs per L1 Frame	Average Number of Encoded Audio Packets Per PDU (N)	PDU Sequence Number Range	Lc bits Per Location	Maximum Bit Rate (kbit/s)
0b0000	FM Hybrid	1	00	Core	1	32	0-1	16	96
0b0001	FM All-Digital	2	00	Core	8	4	0-7	12	48
			01	Enhanced	1	32	0-1	16	48
0b0010	AM Hybrid	2	00	Core	8	4	0-7	12	20
			01	Enhanced	1	32	0-1	16	16
	AM All-Digital	2	00	Core	8	4	0-7	12	20
			01	Enhanced	1	32	0-1	16	20
0b0011	FM All-Digital	2	00	Core	8	4	0-7	12	24
			01	Enhanced	1	32	0-1	16	72
0b0100 to 0b1001	Reserved								
0b1010	FM Hybrid / All-Digital	2	00	Core	1	32	0-1	12	22
			01	Enhanced	8	4	0-7	12	24
0b1011 to 0b1100	Reserved								
0b1101	FM Hybrid / All-Digital	1	00	Core	8	4	0-7	12	24
0b1110	Reserved								
0b1111	Reserved								

[30] From reference [4], section 5.2.1.1, Table 5-2.

6.2 Opportunistic Data

When an audio encoder does not use all of the bytes allocated to its use of the layer 2 PDU, the unused capacity can be made available as "opportunistic data" capacity. Opportunistic data is allocated independently on each PDU, such that there is no guarantee of a delivery rate in a series of transmitted PDU's. The effective data rate of opportunistic data is highly dependent on the characteristics of the audio program and the resulting quantity of data required to represent the coded audio. Effective opportunistic data rates typically range from zero to several kilobits per second. The relationship between fixed, opportunistic, and other data capacities on the Layer 2 channel multiplex is described in detail in [3].

NRSC Document Improvement Proposal

If in the review or use of this document a potential change appears needed for safety, health or technical reasons, please fill in the appropriate information below and email, mail or fax to:

National Radio Systems Committee
c/o Consumer Electronics Association
Technology & Standards Department
1919 S. Eads St.
Arlington, VA 22202
FAX: 703-907-4190
Email: standards@ce.org

DOCUMENT NO.	DOCUMENT TITLE:
SUBMITTER'S NAME: COMPANY:	TEL: FAX: EMAIL:
ADDRESS:	
URGENCY OF CHANGE: _____ Immediate	_____ At next revision
PROBLEM AREA (ATTACH ADDITIONAL SHEETS IF NECESSARY): a. Clause Number and/or Drawing: b. Recommended Changes: c. Reason/Rationale for Recommendation:	
ADDITIONAL REMARKS:	
SIGNATURE:	DATE:

FOR NRSC USE ONLY

Date forwarded to NAB S&T: _____
Responsible Committee: _____
Co-chairmen: _____
Date forwarded to co-chairmen: _____

Annex 1 - Summary of most significant changes included in NRSC-5-C

The first table below describes categories of changes and which specific changes fall into these categories. The second table below is the change list itself.

Category	Change Numbers (from second table)
Asymmetric sidebands	2-6, 12, 19, 54-55, 57-58, 60, 65, 67, 68, 70-71
Conditional access	31, 33, 35
Core-only AM	11, 13-14, 16-18, 20, 22-25, 61
Correction	9, 29-30, 39-41, 56
Discontinued feature	43-44
Diversity delay	1, 8, 10, 21
Expanded definition	15, 26-287, 32, 34, 36-38, 42, 46-47, 51-53, 59, 62-64, 66, 69, 72
New feature	45, 48-50

System aspect	No.	Description	Relevant sections
Layer 1 FM	1	Added FM System Parameter – Analog Diversity Time Delay	1011s §3.5
	2	Added asymmetric sideband operation for hybrid mode	1011s §5.3, Figure 5-5, Table 5-1
	3	Added asymmetric sideband operation for extended hybrid mode	1011s §5.4, Figure 5-6, Table 5-2
	4	Expanded functionality of System Control Channel	1011s §6.1, Figure 6-1, Table 6-1
	5	Distinguish between primary and secondary amplitude scale factors	1011s §6.5, 6.6, Table 6-6
	6	Expand discussion on robustness to include impact of asymmetric sideband operation	1011s §7.2.3
	7	Logical channel characterization, Service Mode MP11 – correction to frame size, P3 and P4	1011s §7.2.4, Table 7-6
	8	Distinction made between digital diversity delay and analog diversity delay	1011s §9.2, 14.2.3
	9	Data subcarrier mapping, Service Mode MP11 – for starting subcarrier numbers -317, -298, 281, 300, 319, 338, correction to: - Interleaver Partition - Interleaver Matrix Starting Column Number - Interleaver Matrix Ending Column Number	1011s §12.3.1.4
Layer 1 AM	10	Added AM System Parameter – Analog Diversity Time Delay	1012s §3.5
	11	Added sideband power control including Reduced Digital Bandwidth (RDB) mode (*i.e.*, modified MA1)	1012s §4.2.1, 6.3
	12	Added asymmetric sideband operation for hybrid mode	1012s §5.3, Figures 5-1, 5-2, 5-3, Table 5-1
	13	Added all-digital waveform reduced digital bandwidth configuration	1012s §5.4, Figure 5-5, Table 5-2
	14	Expanded functionality of System Control Channel	1012s §6.1, Figure 6-1, Table 6-1
	15	Changed details for defaults for service modes MA8, MA12, MA16, MA20, MA24, MA28, MA32	1012s §6.2.1 (Table 6-3),

System aspect	No.	Description	Relevant sections
	16	Added section on subcarrier scaling control signals	1012s §6.3, Tables 6-4, 6-5
	17	Added subsection on reduced digital bandwidth control	1012s §6.3.2
	18	Added subsection on high-power PIDS control	1012s §6.3.3
	19	Expand discussion on robustness to include impact of asymmetric sideband operation	1012s §7.2.3
	20	Added spectral mapping figures for reduced digital bandwidth modes	1012s §7.3, Figures 7-3, 7-5
	21	Distinction made between digital diversity delay and analog diversity delay	1012s §10.1, 14.2.3
	22	Expanded system control data sequence	1012s §11.2
	23	Added subsection on high power PIDS indicator	1012s §11.2.3
	24	Added subsection on reduced digital bandwidth indicator	1012s §11.2.5
	25	Added reference to 9.4 kHz low-pass filtering requirement for reduced digital bandwidth configuration	1012s §14.2.2
Layer 2 multiplex	26	Added section on Order of Content	1014s §5.3
Audio transport	27	New bit allocation definition for codec mode 0b1111	1017s, §5.2, Figure 5-3
	28	Expanded audio codec mode definitions	1017s, §5.2.1.1, Table 5-2
	29	Removed specification of minimum bit rates as a function of audio codec mode	1017s, §5.2.1.1
	30	Reduced range of TX Digital Audio Gain Control (previous maximum was +7dB, now +6 dB)	1017s, §5.2.1.3
	31	Change in definition of header expansion field bits and expanded description header expansion field contents	1017s, §5.2.1.6 (and subsections), Table 5-6
	32	Updated Program Service Data specification, specified nominal PSD rates increased	1017s, §5.2.2, Table 5-9
	33	Added subsection on Audio Encryption	1017s, §5.2.4
AAS transport	34	Expanded Port number assignments	1019s, §5.1, Table 5-2
	35	Expanded PDU structure to support conditional access	1019s, §6.2.1, Table 6-1, Figure 6-2
	36	Expanded data transport packet format (DTPF) field values	1019s, §6.2.3, Table 6-2
	37	Added subsection on Coding Rates	1019s, §6.3.1
	38	Added subsection on Interleaving Range	1019s, §6.4.4
	39	Corrected Reed-Solomon code rates in Bearer Channel Comparison table	1019s, §7.2, Table 7-1
	40	Changes made to Synchronization Channel parameters	1019s, §7.5.1, Table 7-2
	41	Changes made to Configuration Control Channel parameters	1019s, §7.5.2, Table 7-3
SIS transport	42	Expanded SIS PDU format	1020s, §4, Figure 4-1, Table 4-1
	43	Station name - long format now not recommended for new designs	1020s, §4,2.2
	44	Discontinued ALFN SIS message	1020s, §4.3
	45	Added SIS message – Service Information Message	1020s, §4.6
	46	Expanded SIS Parameter Message indices	1020s, §4.7, Table 4-15

System aspect	No.	Description	Relevant sections
	47	Added SIS Parameter Message index format illustrations	1020s, §4.7, Figures 4-12 through 4-23
	48	Added subsection on broadcast equipment software version information	1020s, §4.7.2
	49	Added SIS message– Universal Short Station Name / Station Slogan	1020s, §4.8
	50	Added SIS message– Active Radio (AR) Message	1020s, §4.9
	51	Expanded example – scheduling of SIS PDUs on the PIDS logical channel	1020s, §5.2.1 (regular scheduling), §5.2.2 (emergency alert schedule)
FM transmission system specifications	52	Modified FM hybrid waveform noise and emission limits; re-defined measurement point and test configuration	1026s, §4.4.1, Figure 4-1, Table 4-1
	53	Re-defined measurement point and test configuration for FM all-digital transmission	1026s, §4.4.2
	54	Updated digital sideband level descriptions to account for asymmetric sideband mode of operation	1026s, §4.5, Table 4-3
	55	Added subsection on FM hybrid and extended hybrid digital carrier power	1026s, §4.5.1
	56	Added subsection on RF spectral inversion	1026s, §4.5.2
	57	Updated phase noise section to encompass asymmetric sideband operation	1026s, §4.6
	58	Updated discrete phase noise section to encompass asymmetric sideband operation	1026s, §4.7
	59	Added section on Modulation Error Ratio (this replaces previous section on Error Vector Magnitude)	1026s, §4.8
	60	Updated Gain Flatness definition to encompass asymmetric sideband operation	1026s, §4.9
AM transmission system specifications	61	Added reduced digital bandwidth configuration (*i.e.*, modified MA1)	1082s, §4.4, $4.5.3, Figure 4-3, Table 4-3
	62	Modified AM hybrid waveform noise and emission limits for 5 kHz analog bandwidth configuration; re-defined measurement point and test configuration	1082s, §4.5.1, Figure 4-1, Table 4-1
	63	Modified AM hybrid waveform noise and emission limits for 8 kHz analog bandwidth configuration; re-defined measurement point and test configuration	1082s, §4.5.2, Figure 4-2, Table 4-2
	64	Re-defined measurement point and test configuration for AM all-digital transmission	1082s, §4.5.4, Figure 4-4, Table 4-4
	65	Updated digital sideband level descriptions to account for asymmetric sideband mode of operation	1082s, §4.6, Table 4-5, Figures 4-5 through 4-13
	66	Added subsection on AM digital carrier power	1082s, §4.6.1
	67	Updated phase noise section to encompass asymmetric sideband operation	1082s, §4.8
	68	Updated discrete phase noise section to encompass asymmetric sideband operation	1082s, §4.9
	69	Added placeholder section on Modulation Error Ratio	1082s, §4.11

System aspect	No.	Description	Relevant sections
	70	Updated Gain Flatness definition to encompass asymmetric sideband operation	1026s, §4.12
	71	Updated amplitude and phase symmetry section to encompass asymmetric sideband operation	1026s, §4.13
Transmission signal quality metrics for FM IBOC signals	72	Added reference document describing the measurement of several transmission signal quality metrics for FM IBOC signals.	2646s

CEA
Consumer Electronics Association

NAB
NATIONAL ASSOCIATION OF BROADCASTERS