Ericsson White Paper[1]

284 23-3155 Uen | September 2011

[Emphasis added.]

* * * *

# LTE Positioning Architecture, Protocol and Methods

Decentralizing the radio-access network (RAN) architecture and minimizing the number of node levels are key characteristics of the design philosophy behind LTE. In addition to this, 3GPP decided that positioning architecture should be transparent to the underlying radio network. As a result, LTE positioning functionality is distributed across LTE radio nodes, eNodeBs, and the positioning node. The eNodeBs, for example, ensure proper configuration of positioning reference signals, provide information to the Enhanced Serving Mobile Location Center (E-SMLC), enable UE inter-frequency measurements if necessary, and provide network-based measurements on request from the E-SMLC.

The positioning node determines which positioning method to use, builds up and provides assistance data to facilitate calculating measurements, collects the necessary measurements, works out the position, and communicates the result to the requesting client.

Operators typically require support for positioning over both the control and user planes. In the control plane, a positioning request is always sent by the Mobility Management Entity (MME) to the E-SMLC, and the delivery of a response – including positioning data, user authorization and charging information – is controlled by the Gateway Mobile Location Center (GMLC). In the user plane, positioning information is exchanged over data channels using the Secure User Plane Location (SUPL) protocol in the application layer.

## ARCHITECTURE AND PROTOCOLS

LTE positioning architecture contains three key network elements: the LCS client, LCS target and LCS server. The LCS server is a physical or logical entity that manages positioning for an LCS target device. It collects measurements and other location information, assists the UE in calculating measurements when necessary, and estimates the LCS target location. An LCS client is a software and/or hardware entity that interacts with an LCS server to obtain location information for LCS targets and may reside in the LCS target. An LCS client sends a request to the LCS server to obtain location information; the LCS server processes the request and sends the positioning result and, optionally, a velocity estimate back to the LCS client. A positioning request can originate from either the UE or the network.

LTE operates two positioning protocols via the radio network: LTE Positioning Protocol (LPP) and LPP Annex (LPPa). LPP is a pointto-point protocol for communication between an LCS server and an LCS target device, and is used to positi on the device. LPP can be used both in the user plane and control plane, and multiple LPP procedures are allowed in series and/or in parallel, reducing latency. LPPa is a communication protocol between an eNodeB and an LCS

[1] Copy at: http://www.ericsson.com/res/docs/whitepapers/WP-LTE-positioning.pdf

server for control-plane positioning – although it can assist user-plane positioning by querying eNodeBs for information and measurements. The SUPL protocol is used as a transport for LPP in the user plane.

Figure 2 illustrates LTE's high-level positioning architecture, where the LCS target is a terminal, and the LCS server is an E-SMLC or an SLP. The control-plane positioning protocols with E-SMLC as the terminating point are shown in blue, and the user plane positioning protocol chain in red.

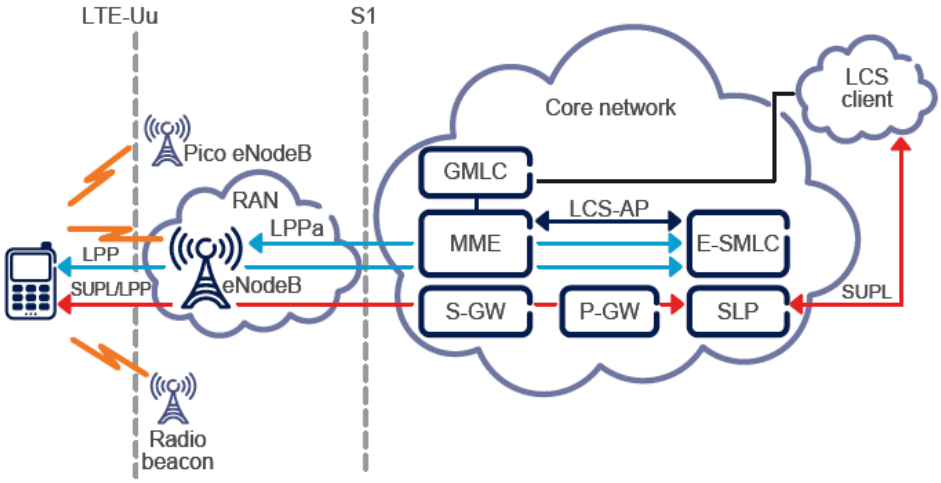

Figure 2: Positioning architecture in LTE Release 9/Release 10

Deploying additional positioning architecture elements, such as radio beacons, can enhance the performance of individual positioning methods. Deploying extra radio beacons and, for example, using proximity location techniques is a cost-efficient solution that can significantly improve positioning performance both indoors and outdoors.

POSITIONING METHODS

To meet the demands created by LBS, LTE networks support a range of complementary positioning methods. The basic method – Cell ID (CID) – utilizes cellular system knowledge about the serving cell of a specific user; the user location area is thus associated with the serving CID. Support for this method has been mandatory since Release 8, and the following methods became available with Release 9:

- Enhanced Cell ID (E-CID) – UE-assisted and network-based methods that utilize CIDs, RF measurements from multiple cells, timing advance, and Angle of Arrival (AoA) measurements
- **OTDOA** – UE-assisted method based on reference signal time difference (RSTD) measurements conducted on downlink positioning reference signals received from multiple locations, where the user location is calculated **by multilateration**
- A-GNSS – UE-based and UE-assisted methods that use satellite signal measurements retrieved by systems such as Galileo (Europe) and GPS (US). LTE supports positioning with existing satellite systems and will develop as new satellite systems become available.

The following commonly known methods do not require additional standardization and are also included in LTE Release 9:

- RF fingerprinting, a method of finding a user position by mapping RF measurements obtained from the UE onto an RF map, where the map is typically based on detailed RF predictions or site surveying results
- AECID [3,5], a method that enhances the performance of RF fingerprinting by extending the number of radio properties that are used, where at least CIDs, timing advance, RSTD, and AoA may be used in addition to received signal strengths, and where the corresponding databases are automatically built up by collecting high-precision OTDOA and A-GNSS positions, tagged with measured radio properties
- hybrid positioning, a technique that combines measurements used by different positioning methods and/or results delivered by different methods.

Uplink TDOA (UTDOA), an uplink alternative method to OTDOA, is being standardized for Release 11. UTDOA utilizes uplink time of arrival (ToA) or TDOA measurements performed at multiple receiving points. Measurements will be based on Sounding Reference Signals (SRSs). For some environments, positioning based on measurements of radio signals can be challenging. Alternative methods, such as enhanced proximity location, can be applied as complements to CID-based methods to improve positioning results. A proximity method may, for example, utilize knowledge about the set of detected networks or radio devices. As civic address information associated with a cell or network node is both comprehensible by a person and the native format for PSAPs, a proximity method may use this information instead of geographical coordinates.

CID is the fastest available measurement-free positioning method that relies on the cell ID of the serving cell – typically available information – and the location associated with that cell, but its accuracy depends on the size of the serving cell. A-GNSS, including A-GPS, is the most accurate positioning method in satellite-friendly environments. The most accurate terrestrial method is OTDOA, which is based on downlink measurements of positioning reference signals transmitted by radio nodes such as eNodeBs or beacon devices. OTDOA and A-GNSS provide highly accurate positioning in most parts of a cellular network and for most typical environments. UTDOA performance may approach that of OTDOA in some deployment scenarios that are not UL-coverage-limited, assuming the use of enhanced UL receivers. **To improve positioning in challenging radio environments, these methods can be complemented, for example, with hybrid positioning, proximity location and new positioning methods in the middle accuracy range, including AoA, RF fingerprinting and AECID. Note that the AECID method utilizes a wider set of measurements than the RF fingerprinting method – including, for example, timing measurements – meaning that AECID is significantly less subject to environment limitations**. In the future, as networks become denser, the role of proximity methods will become important.

* * * *

## CONCLUSION

LTE technology enhances positioning performance, provides flexibility for applications and creates new business opportunities for location-based applications and services. **Because no single positioning method works well in all environments, new-generation positioning**

**systems must have integrated solutions that combine a wide range of complementary positioning methods and techniques together with the ability to learn about and adapt to the radio environment**. **Indeed, the need for multi-standard positioning solutions is obvious in a world where such a large variety of radio access and positioning standards coexist**. However, there remains a pressing need to align the position-reporting formats used by cellular networks and emergency systems if emergency services are to benefit from the degree of accuracy their line of work demands, while also remaining cost- and resource-efficient.

---

[The paper containing the above excerpts is attached below.]