QUALCOMM Incorporated

1730 Pennsylvania Ave., NW ■ Suite 850 ■ Washington, DC 20006 ■ Tel: 202.263.0020 www.qualcomm.com

September 11, 2012

Marlene H. Dortch
Secretary
Federal Communications Commission
445 12th Street, SW
Washington, DC 20554

Re: Written *Ex Parte* Presentation in RM-11640 – Petition for Rulemaking to Establish a Next Generation Air-Ground Service On A Secondary Licensed Basis In The 14.0 to 14.5 GHz Band

Dear Ms. Dortch:

QUALCOMM Incorporated ("Qualcomm") hereby responds to the recent filing by the Satellite Industry Association ("SIA"), including the technical paper prepared by Telecomm Strategies that accompanied SIA's filing.[1] Qualcomm also provides herewith a detailed report demonstrating the feasibility of measuring the potential interference caused by the backlobe radiation from a Next Generation Air-Ground ("Next-Gen AG") Ground Station ("GS") to a GSO satellite. This report demonstrates that Qualcomm's interference analysis was conservative by at least 13 dB.

As explained in Attachment A to this letter, Qualcomm has already thoroughly analyzed the interference conditions described in the Telecomm Strategies technical paper, and as shown in Qualcomm's prior filings, there is no risk that the incumbent users of the 14.0 to 14.5 GHz band will cause harmful interference to the Next-Gen AG service, or that the quality of service provided by a Next-Gen AG provider will be materially impaired by incumbent users. In fact, the Next-Gen AG service has been designed to operate in the presence of all incumbent users of the band and not suffer harmful interference from, or cause harmful interference to, such users. Tellingly, SIA's filing does not claim that the Next-Gen AG service will cause harmful interference. Rather, SIA's sole claim is that the Next-Gen AG service will suffer harmful interference, but Qualcomm once again explains herein that this is not the case.

In Attachment B to this letter, Qualcomm demonstrates the feasibility of the real-time test procedure for estimating potential interference caused by backlobe radiation from a Next-Gen AG GS to a Ku-band GSO satellite that Qualcomm described in the Appendix to its July 31, 2012 Reply Comments. Qualcomm found that when the antenna backlobe points directly at the GSO satellite, a configuration that would never occur in actual operation of the Next-Gen AG system, the resulting interference is at a level consistent with a front-to-back gain ratio of at least 50 dB. In a more typical situation where the GSO satellite appears at a higher elevation angle in the southern sky, the front-to-back gain ratio is at least 55 dB. The analysis in Qualcomm's

[1] *See* SIA August 31, 2012 filing in RM-11640.

original Petition for Rulemaking assumed that the front-to-back gain ratio was about 37 dB, and these data demonstrate that this assumption was conservative by at least 13 dB.

Qualcomm looks forward to continuing to work with the FCC and all interested stakeholders in this proceeding. Given the pressing need to support broadband connectivity on-board aircraft and Qualcomm's detailed and technically-sound proposal and full responses to all questions raised in regard to the Petition, Qualcomm urges the FCC to promptly issue a Notice of Proposed Rulemaking proposing to establish the Next-Gen AG service on a secondary licensed basis in the 14.0-14.5 GHz band so that the proposed service can become a reality.

Respectfully submitted,

Dean R. Brenner
Vice President, Government Affairs

Atts (3) Att. A: Qualcomm response to Telecomm Strategies paper
Spreadsheets containing Next-Gen AG aircraft and GS antenna pattern data in three dimensions
Att. B: Results of Experimental Tests that Verify the Ability to Measure Signal Levels from Next-Gen AG GSs

cc w/ Atts (via email)

Jim Ball	John Leibovitz
Brian Butler	Jennifer Manner
Kathleen Collins	Geraldine Matise
Thomas Derenge	Robert Nelson
Peter Georgiou	Sankar Persaud
Howard Griboff	Jamison Prime
Ira Keltz	Ron Repasi
Julius Knapp	Sci-Byung K. Yi

Attachment A

Qualcomm response to Telecomm Strategies paper: "Interference into ATG from Incumbent Users of the 14.0-14.5 GHz Band"

1.0 Introduction

Qualcomm responds below to the issues raised in the Telecomm Strategies paper that SIA filed with the Commission in RM-11640 on August 31, 2012.

2.0 Need for Three-Dimensional ATG Antenna Masks

Qualcomm provided Next-Gen AG aircraft and GS antenna masks in previous filings.[2] SIA now requests three-dimensional antenna pattern masks for the antennas. Three-dimensional antenna patterns for the Next-Gen AG aircraft and GS antennas are provided below in Figures A1 and A2. Since the GS antenna beam is quite narrow, Figure A2 shows a cut of the pattern in elevation from 80° to 100°, and in azimuth from 0° to 50° to see the details of the main beam. The pattern over the full range of angles is provided in the form of a spreadsheet. The patterns are shown as a function of elevation angle θ (θ =0 being the zenith), and azimuth angle ϕ. The gains are truncated at -20 dB.

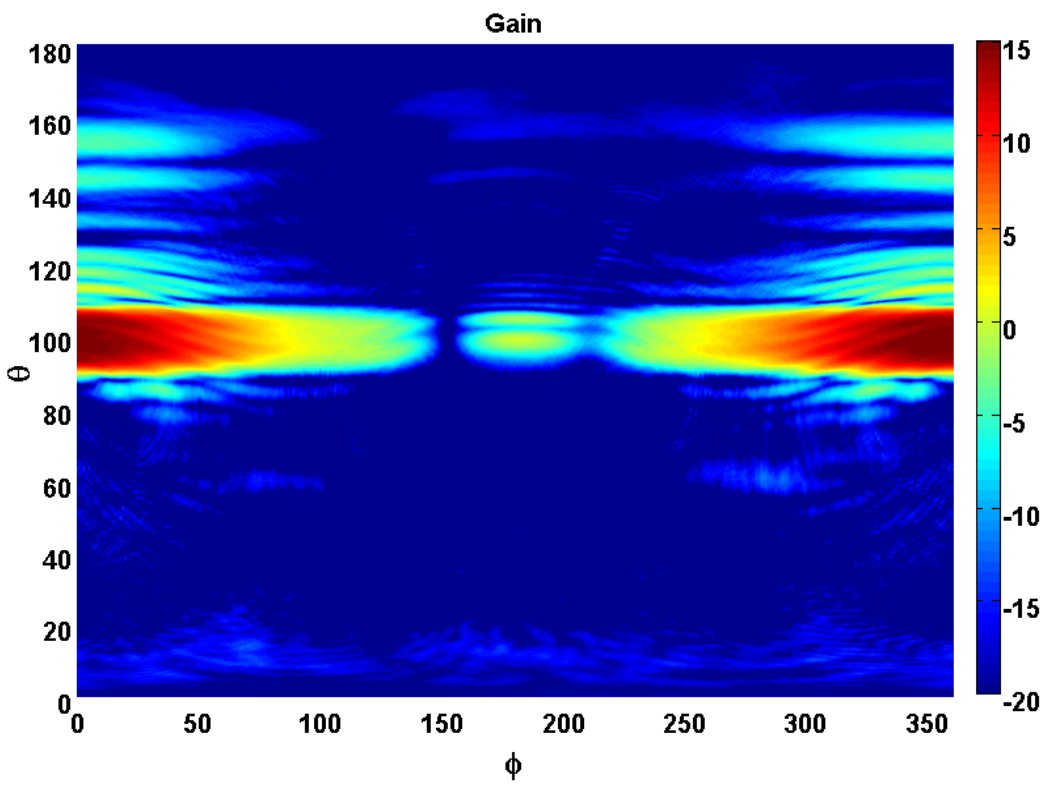

Figure A1. Three-Dimensional Antenna Pattern for Next-Gen AG Aircraft Antenna; the pattern is simulated by placing the antenna is placed at the belly of a Hawker airplane; θ is the angle in elevation where θ=0° is toward zenith and θ=90° is toward the horizon, ϕ is angle in azimuth

[2] *See* Qualcomm September 2, 2011, letter and attachment, *and see* July 31, 2012, Reply Comments at 13-15.

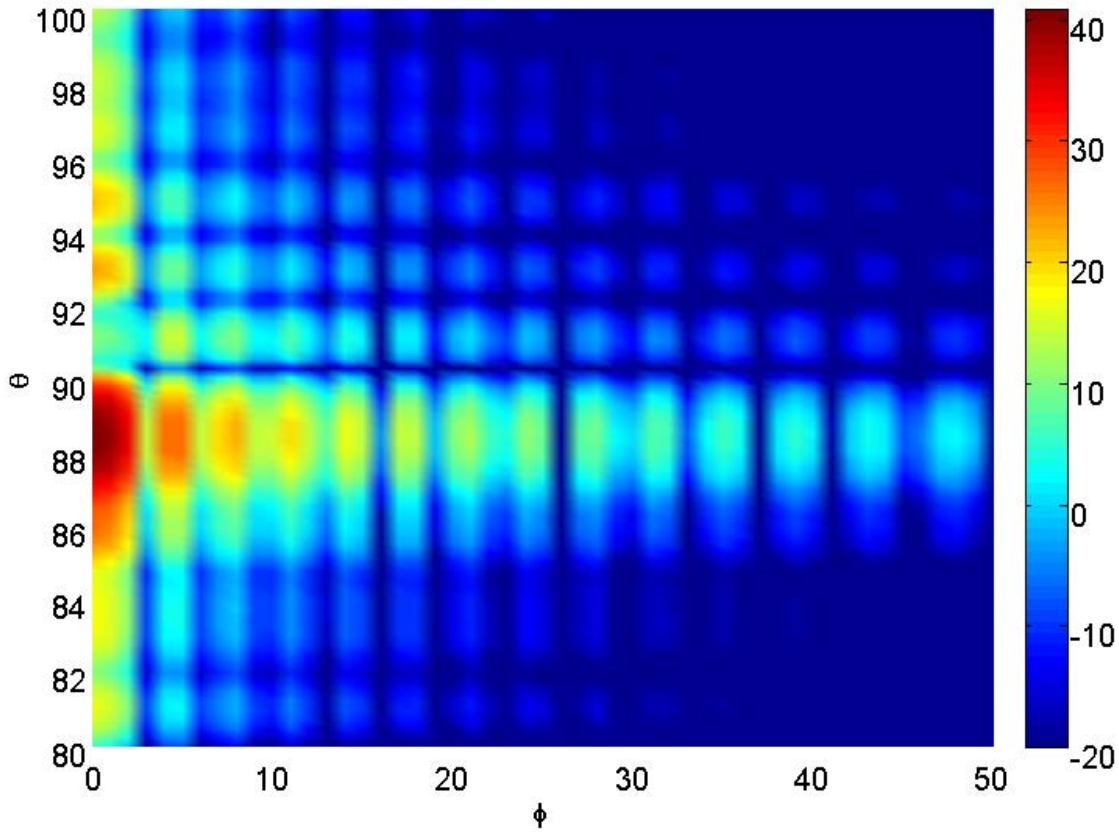

Figure A2. Three-Dimensional Antenna Pattern for Next-Gen AG GS Antenna; cut of the pattern in elevation from 80° to 100°, and in azimuth from 0° to 50°

In addition, Qualcomm provides the data for the three-dimensional antenna patterns in the form of two spreadsheet files. PDF copies of these data sets are being filed in the FCC's ECFS and native copies of the spreadsheet files (in ZIP format) are being sent via email to each of the FCC staff listed on page 2 of the cover letter and to Patricia Cooper of SIA.

As will be made clear in the following sections that respond to each specific interference claim in the Telecom Strategies paper, there is no risk of harmful interference from incumbent services to the proposed Next-Gen AG service, and calculations based on three-dimensional antenna pattern masks do not change this conclusion.

3.0 Interference from a Single VSAT into the ATG Ground Station

The analysis in Table 1 of the Telecomm Strategies paper considers a highly contrived scenario where the VSAT and the Next-Gen AG GS antennas are deployed at the same height and the GS antenna beam boresight is pointing directly at the VSAT terminal. It is not possible, however, for the peak of the GS antenna beam to be pointing at the VSAT terminal as set out in the scenario presented in Table 1. The peak of the GS beam is placed above horizon by about 1.5° since the elevation angle of the GS toward

aircraft is at least 1° above horizon even at the cell edge.[3] So, if the VSAT terminal and GS antenna are both placed at the same height of 30 meters, the peak of GS beam will not be pointing toward the VSAT antenna. In fact, with a VSAT and GS spacing of 16 km as assumed in Telecomm Strategies paper, the VSAT terminal must be at the height of approximately 0.4 km for the peak of the GS antenna beam at 1.5° above horizon to actually point at the VSAT terminal. Thus, the specific geometry described by Table 1 of the Telecomm Strategies is not appropriate.

Table 2 in the Telecomm Strategies paper uses free space propagation at 3 km for a VSAT terminal at a height of 1 meter. That is not realistic either, as there is a high probability that a 1 meter high VSAT terminal that is 3 km away from a GS site will see at least some blockage. The elevation angle from the VSAT terminal at a 1 m height toward the GS antenna at a 30 meter height is about 0.5°. At such low elevation angles, a path loss exponent of 2 at 3 km is inappropriate. Statistically, the probability of free space propagation at 3 km and these particular antenna heights is very low. In fact, cellular networks assume Hata propagation models with a path loss exponent of 3.5. Also, SIA's July 15, 2012 comments used models with exponents of 2.5 and 3 as alternatives to free space.[4] Thus, a free space path loss exponent of 2 is not realistic, particularly for the scenario set out in Table 2 in the Telecomm Strategies paper. Qualcomm's model used an exponent of 2.5 (as did SIA in its July 15, 2012 filing), which results in an additional 27.5 dB of loss.

Although the two scenarios outlined in Tables 1 and 2 of the Telecomm Strategies paper are not realistic, it is possible that there could be situations where the distance and propagation environment will result in excessive interference to a small portion of the spectrum used by the Next-Gen AG system. One such case is where a VSAT terminal is deployed very close to a GS site. Another situation is when there happens to be a clutter free path from the terminal to the GS site; but this has a low probability of occurrence as mentioned above. By proper choice of GS cell sites, GS antenna height, and use of GS narrow beam characteristics, the probability of scenarios where VSATs do cause harmful interference to the Next-Gen AG GS can be made quite small. Even if one were to construct a situation such that the peak of the GS beam points at the VSAT terminal as set out in the Telecomm Strategies paper, or where the VSAT terminal is very close to the GS antenna, which was analyzed in Table 1 of Qualcomm's July 31, 2012 filing, only a very small part of the spectrum will be impacted because VSATs use no more than 2 MHz of spectrum (a point Qualcomm has explained repeatedly). As explained below, the portion of the spectrum being interfered with will not break the Next-Gen AG system uplink or downlink; the rare case of interference will merely reduce the capacity of the system by the fraction of spectrum impacted and length of time interference is present.

The LTE interface-based system under development by Qualcomm would use multiples of 20 MHz of spectrum on the downlink and uplink. Modern cellular standards (such as EV-DO of 3GPP2, and HSPA and LTE of 3GPP) use exceptionally robust error recovery techniques to mitigate interference from co-frequency users in adjacent sector/cells and deep fades. In particular, the LTE interface standard uses the two powerful techniques of frequency hopping and Incremental Redundancy ("IR") to combat interference from co-frequency users in adjacent sectors/cells and deep fades. User data is encoded using error correction codes and then a fraction of those coded bits is sent in the first transmission in a portion of spectrum referred to as a Resource Allocation ("RA"). The baseline design for the Next-Gen AG system is considering an RA of about 2 MHz. If there is no fade or interference from another user from adjacent sectors/cells, then with high probability the packet may be decoded correctly based on the first transmission. Otherwise, additional coded bits corresponding to the same packet will be transmitted in an

---

[3] *See* Qualcomm July 31, 2012, Reply Comments at 17.

[4] *See* SIA July 15, 2012 Comments at 10, specifically the exponent used in the "Minimum Separation Required Based Upon Path Loss Formula."

RA that is in a different part of the spectrum ("frequency hopping"). The terminal or the GS, depending on the direction of the transmission, can combine the previously received coded bits with the newly received incremental redundant coded bits and attempt to decode the packet. This process continues a number of times until the packet is correctly decoded. Therefore, the effect of IR and frequency hopping is to skip the piece of the spectrum that is being interfered with while the data communication continues uninterrupted.

The Telecomm Strategies paper concludes that the uplink or downlink of the Next-Gen AG system is disrupted in each scenario where interference into the AG system is above a threshold in a portion of the spectrum. In reality, however, links of modern cellular systems, particularly LTE system, continue to operate without interruption in face of interference in a part of their spectrum as was described above.

The net effect of interference in some portion of the spectrum is to reduce the throughput by the fraction of the spectrum and fraction of time interference is present. Therefore, the effect of a VSAT which transmits in a small portion of spectrum, say 2 MHz, and with a duty cycle of 10%, is to reduce the capacity of the Next-Gen AG system that uses 100 MHz of bandwidth by less than 0.1*2/100=0.2%. This reduction will occur only if the VSAT is very close to GS and the propagation environment is very benign, which as discussed above is a very low probability event. Therefore, a GS site can operate with high capacity even in the vicinity of VSAT terminals. The only time the Next-Gen AG operator would need to move a GS site would be where there are a large number of high power FSS terminals that together transmit in a large portion of the spectrum allocated to Next-Gen AG, and with very high duty cycle, and these terminals all happen to be close to the GS and have very benign propagation path to the GS. This is a low probability event. And, should this occur, the Next-Gen AG operator may adjust the height of its GS antenna or move to a different site.

4.0 Interference from VSATs to ATG Aircraft

The Telecomm Strategies paper assumes that 25% of the total 600,000 VSAT terminals across the CONUS are simultaneously transmitting in 500 MHz of Ku band bandwidth. Telecomm Strategies divides these simultaneously transmitting terminals into the 20.2 sub-areas, each the size of the field of view of the aircraft. This results in 743 simultaneously transmitting VSAT terminals in the field of view of the aircraft in 50 MHz of bandwidth of one transponder. In these 20.2 such coverage areas across the CONUS, the total number of simultaneously active terminals on 50 MHz of bandwidth is 15,000. However, there only are 40 satellite slots in the geo-arc over CONUS. And, there are about 375 simultaneously active VSAT terminals transmitting on one 50 MHz transponder. The Telecomm Strategies paper further assumes that all these terminals are transmitting at the maximum allowable EIRP of 56.2 dBW. Thus, the total EIRP from the ground toward one transponder from all 375 VSAT terminals would be about 81.9 dBW. However, this amount of power is well above the power that saturates a typical Ku band satellite transponder configuration. The total EIRP that saturates a typical Ku band transponder is approximately 70 dBW. The 70 dBW EIRP value is based on the typical transponder Saturation Flux Density ("SFD") of approximately -93 dBW/m^2. Thus, the assumption that all VSAT terminals transmit at maximum allowable EIRP results is at least 12 dB extra power above typical transponder saturation levels. In addition, the PA of a transponder provisioned to carry traffic from multiple VSAT terminals must be backed-off by as much as 6 dB to minimize intermodulation distortion due to multiple carriers. This implies that the transponder is being saturated by as much 12 + 6 = 18 dB if all VSAT terminals transmit at the maximum allowable EIRP of 56.2 dBW. Thus, the assumption of total VSAT transmit power that Telecomm Strategies paper used to compute the interference into Next-Gen AG aircraft receiver is overestimated by about 18 dB. This overestimation in the Telecomm Strategies paper is the major cause of the discrepancy between its results and those in Qualcomm's Petition.

Qualcomm estimated in the Petition for Rulemaking the total number of VSAT terminals at a given EIRP based on the SFD that saturates the transponder. Qualcomm assumed that VSATs are transmitting at 40 dBW EIRP and then computed the number of simultaneously transmitting VSAT terminals at that power level that would saturate the transponder. Qualcomm believes that this is the most accurate means of estimating the number of simultaneously transmitting VSAT terminals and their respective power levels. In fact, many VSATs use very low PA powers of a few watts and not the maximum allowable EIRP. Operating at the maximum allowable EIRP is not necessary for many VSAT services and the use of high PAs (*e.g.*, 20 Watts) can be quite expensive. The satellite system is designed in this way in order to maximize the number of supportable VSAT terminals.

Based on the above analysis/discussion, the proposed Next-Gen AG system has ample margin to mitigate interference from a fully deployed VSAT network.

5.0 AMSS Interference into ATG Aircraft

The Telecomm Strategies paper considers the case with two aircraft within 3000 feet of each other and the antenna backlobe of 0 dB for the AMSS terminal toward AG terminal and a gain of 0 dB for the AG terminal in the direction of the AMSS terminal. These assumptions are not realistic as explained below.

According to FAA rules, aircraft that fly at the same level must be separated by as much as 5 nautical miles. Therefore, if the two aircraft are within 3000 feet of each other they must be flying at different altitudes. Nonetheless, if two aircraft flying at the same altitude are considered, the FAA required separation distance of 5 nautical miles results in 20 dB additional path loss compared to the separation distance of 3000 considered by Telecomm Strategies. With the additional 20 dB of path loss and using the calculation in Table 4 of Telecomm Strategies report, the C/I received at the Next-Gen AG aircraft is about 8.4 dB. Combined with a C/N of 10.2 dB at the aircraft receiver, the overall C/(I+N) at the aircraft receiver is 6.2 dB which is still well above that required to achieve the highest targeted data rate for the proposed Next-Gen AG system.

Consider two aircraft at different altitudes but within 3000 feet of each other as assumed by Telecomm Strategies. Figure A1 provided above shows simulations of the Next-Gen AG antenna on a Hawker aircraft. θ is the angle in elevation where $\theta=0°$ is toward zenith and $\theta=90°$ is toward the horizon, ϕ is angle in azimuth. Since aircraft flying in the same direction need a separation of 2000 feet in altitude, then an assumed distance of 3000 feet between two aircraft means that the two aircraft must be also separated horizontally by about 2000 feet. This means the elevation angle between the two planes is about 45°. Figure A1 shows that the Next-Gen AG aircraft antenna gain is less than -20 dB in almost all azimuthal angles at the elevation angle of 45° above horizon. This additional 20 dB of attenuation will, similar to the calculation above, result in an overall C/(I+N) of 6.2 dB at the separation distance of 3000 feet which is again well above that required to achieve the highest targeted data rate for Next-Gen AG system. Note that the Next-Gen AG antenna discrimination toward the AMSS transmitter would be even larger for the antenna on larger commercial aircraft than a Hawker.

Accordingly, based upon FAA regulations, the pattern of the Next-Gen AG antenna, and location of the AMSS and Next-Gen AG antennas, Qualcomm could not find a configuration between two planes where the AMSS transmitter would cause excessive interference to the Next-Gen AG aircraft receiver. Even if such a configuration did exist, the relative position between planes would be exceedingly transitory as any such two planes would not be flying at the same exact speed and direction. The distance between the two planes very quickly would increase to beyond a few miles.

6.0 AMSS Interference into ATG Ground Station

The scenario considered in this section of the Telecomm Strategies paper is of very low probability. The 0 dBi antenna gain Telecomm Strategies assumed from AMSS terminal into the GS site is very likely too high given that the GS is below horizon with respect to the AMSS terminal. But even with this pessimistic assumption there is no issue as discussed below. Also, the conclusion that the GS link is disrupted when the interference from an AMSS terminal into the GS exceeds a threshold in a small portion of the bandwidth of the GS is incorrect as was described above and will be briefly revisited below.

The Next-Gen AG GS beam has a narrow beamwidth of about 2.8° and high roll-offs beyond its main beam. Therefore, the calculations in the Telecomm Strategies paper assume that the AMSS-equipped aircraft happens to be in the beam that is placed on a Next-Gen AG-equipped aircraft. This assumes the two aircraft are very close, *i.e.*, within ±7 km of each other, and at the cell edge, *i.e.*, 300 km from the GS site. Therefore, the probability of occurrence of the configuration in Table 5 of the Telecomm Strategies paper is rather small. But even when the two aircraft are flying in such close proximity, only about 3 MHz of the uplink of the Next-Gen AG system is impacted by the AMSS aircraft as computed in Table 5 of the paper. As discussed above, the proposed Next-Gen AG system uses frequency hopping and IR techniques. The effect of these techniques will result in only a minor reduction of the throughput of the uplink of the aircraft that is flying very close to an AMSS aircraft in accordance with the fraction of the spectrum impacted and amount of time that the spectrum is interfered with. The time duration is determined by the fraction of time the AMSS- and AG-equipped aircraft are flying very close to each other. Therefore, the Next-Gen AG uplink is at no time disrupted and the impact of the AMSS transmitters is to slightly reduce the capacity of the AG system on a temporary basis as in other interference scenarios.

Attachment B

Results of Experimental Tests that Verify the Ability to Measure Signal Levels from Next-Gen AG GSs

In Appendix A of Qualcomm's July 31, 2012 Reply Comments, Qualcomm described a real-time test procedure to measure the interference caused to GSO satellites from backlobe radiation of Next-Gen AG Ground Stations ("GSs"). This report summarizes the results of such an experiment. Qualcomm measures the backlobe interference produced from a prototype GS antenna into transponders located on two different GSO satellites. The measurements show that the front-to-back gain ratios on the prototype GS antenna exceed 50 dB.

1.0 Introduction

Qualcomm leases Ku-band transponders on several GSO satellites to carry customer traffic for the company's OmniTracs vehicle tracking and communication system. In advance of a transponder lease expiration at the end of September 2012, two transponders were cleared of OmniTracs system traffic in mid-August, allowing these transponders to be used for Next-Gen AG testing. Qualcomm used these idle transponders in an experiment to assess potential interference from the antenna backlobes of Next-Gen AG Ground Stations. The two GSO satellites and transponders are:

1. AMC-1 located at 103° West; Transponder 10, 14.2 GHz (H-pol) uplink, 11.9 GHz (V-pol) downlink; approximate G/T = 5 dB/K at latitude 32.9 N and longitude 117.2 W.
2. AMC-9 located at 83° West; Transponder 10, 14.2 GHz (H-pol) uplink, 11.9 GHz (V-pol) downlink; approximate G/T = 3.5 dB/K at latitude 32.9 N and longitude 117.2 W.

As discussed in Appendix A of Qualcomm's July 31, 2012 Reply Comments, the basic procedure involves transmitting a test signal through the Next-Gen AG GS, and detecting the weak signal seen at the GSO satellite's transponder using test equipment located at the satellite earth station gateway. The test procedure is described in Section 2, and basic calibration and verification of the test setup is described in Section 3. Section 4 contains data from the backlobe interference measurements. and conclusions follow in Section 5.

2.0 Description of Test Waveform and Test Procedure

The test signal waveform is a QPSK-modulated pulse-filtered pseudo-noise ("PN") sequence with a chip-rate of 625 kHz and a repetition period of 128 chips. The pulse filter is a square-root raised cosine pulse with an excess bandwidth of 50%, resulting in an occupied bandwidth of approximately 1 MHz.

The PN test signal was radiated at the transponder's center frequency of 14.2 GHz. This was accomplished by loading I/Q samples of one period of the test waveform onto an Agilent MXG N5182A Vector Signal Generator ("VSG") and configuring the VSG to playback the samples at a designated IF frequency. The IF signal was up-converted to Ku-band and radiated using two different antennas: a 9 meter parabolic dish pointed at the satellite and the Next-Gen AG GS antenna. The first of these two antennas was used for "calibration", *i.e.*, verifying the test setup and the accuracy of the measurement software; the second antenna was used for the actual backlobe evaluation.

At the gateway, the return link signal was captured at Ku-band (11.9 GHz) using an Anritsu MS2692A Vector Signal Analyzer (VSA) connected to an analog test port on the gateway. The VSA's capture bandwidth was set to 2.5 MHz around the nominal return link frequency of 11.9 GHz, and I/Q samples

were digitized and stored at a rate of 2.5 MHz over a 20 second duration (50 million samples). The digitized signal captures were processed on a laptop computer running software code written in MATLAB. The experimental setups are shown in Figure B1 and Figure B2 below.

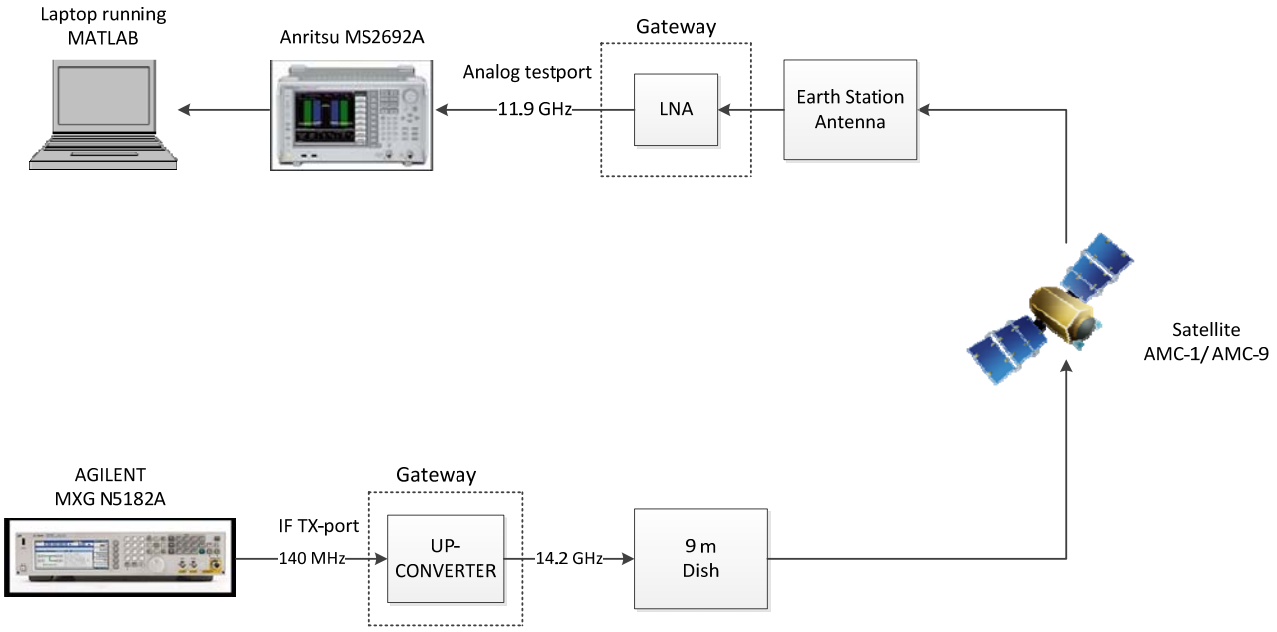

Figure B1. Test and Measurement Setup for Equipment/Software Calibration

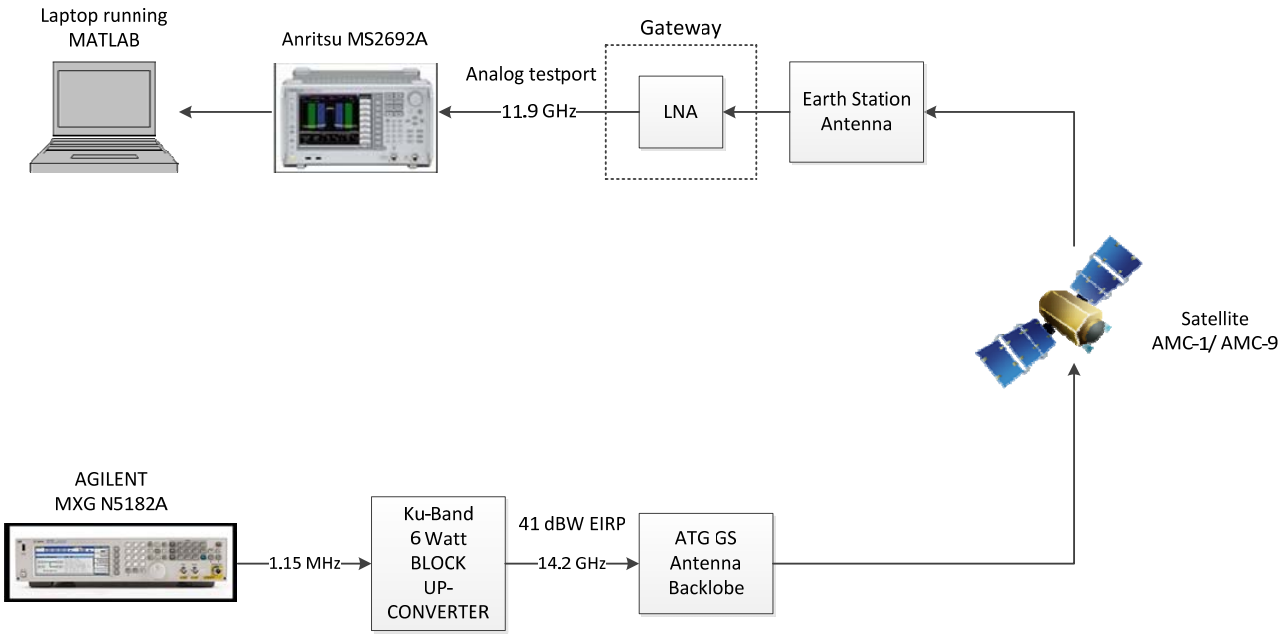

Figure B2. Test and Measurement Setup for GS Backlobe Interference Measurement

3.0 Calibration and Verification of Test Procedure

The MATLAB software application implements a standard PN search algorithm that cross-correlates the test signal with time-delayed and frequency-shifted replicas of the PN sequence. Following an initial coarse acquisition, the software code performs a finer detection/demodulation to recover the signal and estimate its power level with respect to background noise. The frequency search range is determined primarily by the uncertainty of the Local Oscillator (LO) on the GSO satellite's transponder – in these tests, Qualcomm used a range of +/- 5 kHz in 1 Hz steps. The time-delay search range is the PN repetition cycle of 128 chips with ¼-chip granularity.

To test the accuracy of the MATLAB code and the correctness of the test setup, Qualcomm first used a 9 meter parabolic dish aimed at AMC-9 and radiated the test waveform with a sufficiently large transmit signal level on the VSG (as shown in Figure B1). The Signal-to-Noise Ratio (SNR) estimate from the MATLAB software application was compared visually with the signal's spectrum on the Anritsu VSA and was found to match to within approximately 0.5 dB. Then, the transmit signal power was systematically reduced on the MXG signal generator and the corresponding SNR estimates were logged. The data obtained via this procedure is shown in

Table B1 and plotted in Figure B3. Note that the SNR estimates reduce dB-for-dB with the transmit power level confirming the accuracy of the weak signal SNR estimation procedure. Overall, these calibration measurements show that the PN search/demodulation procedure, as implemented in the MATLAB code, provides reliable detection and accurate SNR estimation at received signal levels of up to 50 dB weaker than the background noise.

Capture Time [PDT]	MXG Tx Power [dBm]	Estimated SNR [dB]	Estimated Freq Offset [Hz]
14:59:45	-25.0	17.0	-2904.0
15:06:10	-45.0	-1.3	-2897.5
15:09:25	-65.0	-21.2	-2903.4
15:12:15	-85.0	-41.0	-2903.2
15:14:15	-90.0	-46.1	-2904.0
15:17:40	-95.0	-50.2	-2902.8
15:27:25	-95.0	-49.1	-2903.0
15:28:15	-95.0	-50.6	-2902.5

Table B1. Calibration Test Measurements made on Transponder 10, AMC-9

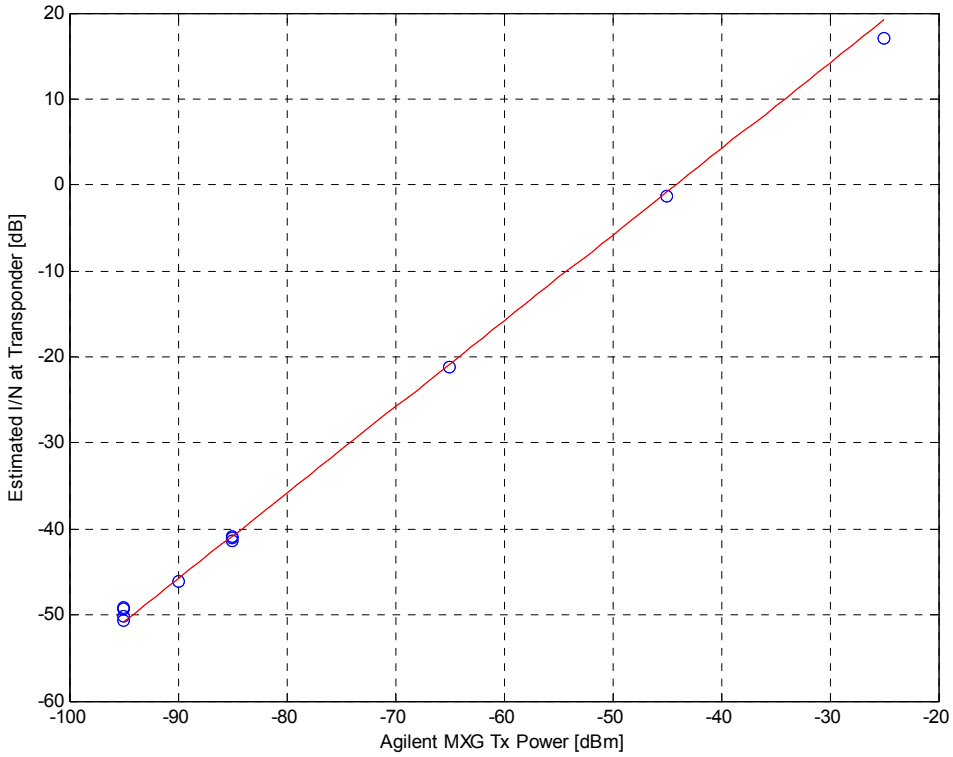

Figure B3. Estimated SNR for Calibration Measurements on AMC-9 (note that the Linear Fit has a slope of 1 dB per dB)

4.0 Next-Gen AG Ground Station Antenna Backlobe Interference

Having verified the equipment setup and the associated PN searcher code running in MATLAB, the next step was to transmit the PN test signal through a prototype Next-Gen AG GS antenna[5] with a single fixed, non-steerable beam. The GS antenna was oriented facing North on the roof of a Qualcomm building in San Diego, CA, located at 32.9040 N and 117.1967 W. The antenna backlobe had a clear, unobstructed view of the southern sky. The IF signal from the MXG signal generator was used as the input to a 6-watt Ku-band Block Up-Converter (BUC) coupled to the GS antenna to transmit with an EIRP of 71 dBm. Multiple signal captures were obtained at the gateway as the GS antenna (shown in Figure B2) was rotated through a range of different azimuth and elevation angles, while staying roughly oriented to the North.

Qualcomm found that only some of these captures yielded a detectable PN test signal at the gateway. In fact, to see the PN test signal at the gateway, the GS antenna had to be oriented such that its backlobe pointed nearly directly at the satellite of interest. In the case of AMC-9, this required orienting the antenna to an azimuth of 310° north and down-tilting it in excess of 20°. Similarly, to detect the test signal at AMC-1, the antenna needed to be rotated to an azimuth of 335° north and similarly down-tilted. Both of these orientations would never be used in actual operation. The data obtained with these tilts is shown in

[5] The GS prototype antenna has a beamwidth of about 2.8° in azimuth and 1.5° in elevation, and a peak gain of 34 dB occurring at an elevation angle of 2° above horizon and at azimuth broadside.

Table B2 and Table B3. At these orientations, the test signal seen at the GSO transponder is at least 44 dB below the background noise.

Local Time [PDT]	Azimuth [deg]	Elevation [deg]	Estimated SNR [dB]	Estimated Freq Offset [Hz]
14:51:00	335	-40	-48.0	-2896.3
15:07:00	335	-40	-46.2	-2901.3
15:08:00	335	-40	-46.8	-2906.2
15:29:00	335	-40	-47.1	-2926.9
15:37:00	335	-40	-47.2	-2930.8

Table B2. Measured SNR Levels on AMC-1

Local Time [PDT]	Azimuth [deg]	Elevation [deg]	Estimated SNR [dB]	Estimated Freq Offset [Hz]
16:17:40	310	-40	-44.4	-2895.7
16:19:25	310	-40	-44.5	-2893.8
16:22:45	310	-40	-43.9	-2894.0
16:27:35	310	-45	-45.4	-2890.4
16:29:05	310	-45	-46.4	-2891.8
16:32:05	310	-20	-48.5	-2892.3
16:33:30	310	-20	-47.7	-2890.7

Table B3. Measured SNR Levels on Transponder 10, AMC-9

The fact that the test signal could not be detected unless the main backlobe was "pointed" at the satellite indicates that, at other orientations, the received signal power must be at least 50 dB below the background noise level. This observation follows from the calibration experiments that establish that the equipment and software can detect the test signal consistently and reliably if its SNR is above -50 dB.

To deduce the backlobe gain of the GS antenna from these measurements, refer to the link budget analysis in

Table B4. The calculation assumes a nominal atmospheric loss of -2 dB at Ku-band and a minimum satellite G/T of 3.5 dB/K at the antenna location. There is no polarization mismatch loss because the transponders and the GS antenna are both horizontally polarized. If the GS antenna were pointed directly at the satellites, the expected I/N is approximately 6 dB. Since the measured I/N is, at worst, -44 dB, it follows that the backlobe gain is at least 50 dB below the antenna's gain maximum. In other words, the front-to-back gain ratio exceeds 50 dB.

	Nominal	Units
GS Tx EIRP	41.00	dBW
Atmospheric Loss at KU band	-2.00	dB
Satellite G/T at Tx Location [Minimum]	3.50	dB/K
BW	625.00	kHz
1/BW	-57.96	-dB Hz
1/Boltzmann	228.60	-dB/K Hz
Path Loss to Geo Arc (at 14 GHz)	-207.00	dB
Polarization Mismatch	0.00	dB
I/N at Satellite Receiver	6.14	dB
Estimated I/N at Satellite Receiver	**-44.00**	**dB**
Implied GS Front-to-Back Gain Ratio	**50.14**	**dB**

Table B4. Link Budget Analysis of the Implied Front-to-Back Gain Ratio.

5.0 Conclusion

This experiment demonstrates the feasibility of a real-time test procedure for estimating potential interference caused by backlobe radiation from a Next-Gen AG GS to a Ku-band GSO satellite. In addition, Qualcomm found that when the antenna backlobe points directly at the GSO satellite, the resulting interference is at a level consistent with a front-to-back gain ratio of at least 50 dB. In a more typical situation where the GSO satellite appears at a higher elevation angle in the southern sky, Qualcomm is able to deduce that the front-to-back gain ratio is at least 55 dB. It is worth noting that in the Petition for Rulemaking, the front-to-back gain ratio was assumed to be about 37 dB for the purpose of assessing the potential interference produced by AG ground stations across CONUS. These measurement data demonstrate that this assumption is conservative by at least 13 dB.