PowerTrunk

September 11, 2012

Marlene H. Dortch, Secretary
Federal Communications Commission
445 Twelfth Street, S.W.
Washington, D.C. 20554

Re: Ex Parte Filing
RM-11663
WT Docket No. 11-69
ET Docket No. 09-234

Dear Ms. Dortch:

This is to advise that on September 7, Jose Martin, Executive Vice-President, PowerTrunk, Inc.; Patrick McPherson and Ken Keane, counsel for PowerTrunk, met with David Furth, Deputy Chief, Public Safety and Homeland Security Bureau; Michael Wilhelm, Deputy Chief, Policy and Licensing Division, PSHSB; and Roberto Mussenden, Brian Marenco, John Evanoff, Dana Zelman, and Daniel Miktus of PSHSB, regarding issues presented by the Petition for Rulemaking in the above-referenced proceeding.

The PowerTrunk representatives explained that the Harris Corporation claim to the effect that Regional Planning Committee coordination of digital technologies using Mask B was "unworkable,"[1] is frivolous. Among other things, PowerTrunk noted that the Commission's band plan for NPSPAC channels contemplates 12.5 kHz channel spacing, but 20 kHz authorized bandwidth. In other words, by Commission design, the channel plan for NPSPAC allows radiating significantly more energy on adjacent channels than is allowed by TIA standards to minimize interference (ACP>60 dB for 12.5 kHz of channel spacing for digital technologies above 512 MHz). Thus, any technology not providing ACP>60 dB requires adjacent channel coordination, and the RPCs have long been accustomed to dealing with this. It is necessary to point out that, by far, neither OpenSky nor any other digital technology complies with TIA's recommendation to avoid interference on NPSPAC adjacent channels owing to the aforesaid Commission design. Using Harris's language, it is a statement of fact that OpenSky causes interference.

It was also suggested that the staff might wish to contact the RPCs which both Harris and PowerTrunk met with on July 11 and August 28, 2012 (Regions 28 and 8) regarding their view as to whether coordination of PowerTrunk's D-LMR is "unworkable."

---

[1] *See* Harris August 30, 2012 ex parte.

Harris did not define what, in its view, is an audio low-pass filter. Analog circuitry is outdated and nothing in the rules makes a distinction between analog and digital filters. Therefore, as long as a filter's input/output response conforms the base band audio signal and the radiated spectrum, that should be viewed precisely as audio filtering, as indicated by the equipment authorizations previously issued in favor of PowerTrunk. Harris claims that audio filtering should be implemented otherwise, but it fails to specify how in terms of filter input/output response, let alone reference any rule that might define it. PowerTrunk's equipment conforms the audio base band signal by way of low-pass filtering both in the analog (subscribers) and digital domains (subscribers and repeaters). With respect to this issue, PowerTrunk is also supplying herewith a block diagram of its technology.[2]

PowerTrunk further observed that its own D-LMR technology offered superior spectral efficiency vs. data throughput compared to Harris' Open Sky. This results in conserving scarce NPSPAC spectrum as the ratio between the respective technologies' physical bit streams is 1.875 (36 Kbits –PowerTrunk vs. 19.2 Kbits –OpenSky). Considering both technologies' ACP values on the adjacent channels, the result is that PowerTrunk is roughly 40 % more spectrum-efficient in NPSPAC than OpenSky in terms of data throughput vs. bandwidth used (i.e. it requires approximately half the frequencies to achieve the same performance). The spectrum conservation enabled by D-LMR benefits RPCs in conducting frequency coordination under the existing Part 90 rules -- especially since end-users in the U.S., including public safety organizations, are increasingly demanding advanced data-centric Automatic Vehicle Location applications (AVL), not only traditional voice-centric solutions.

PowerTrunk also addressed the issue of interoperability. In this regard, it was noted that PowerTrunk is in the process of developing a multi-mode radio for which equipment authorization will be requested in the near future. By use of this technology, any question about the interoperability of D-LMR equipment on NPSPAC channels per Rule 90.203(i) will be resolved. In the interim, PowerTrunk will avoid referencing use of D-LMR on NPSPAC channels.

[2] The diagram was filed by counsel for New Jersey Transit, Elizabeth R. Sachs, on March 23, 2012, as part of an ex parte in WT Docket No. 11-69 and ET Docket No. 09-234.

Finally, given the advantages of D-LMR the Commission may wish to consider developing a new mask, or a different standard altogether, such as an adjacent channel protection standard the same way it's being currently done in the 700 MHz bands. In this regard, Harris has argued that the rules should be changed for the purpose of defending the public interest from "interference" when there have been no "interference" claims from any end-users or RPCs. While it is PowerTrunk's view that Harris is merely seeking to use the FCC's processes in an effort to block competition, and that Harris' Petition should be dismissed owing to the lack of supporting test data, PowerTrunk has also suggested that a field test be conducted in order to assess Harris' claims. Such data could be very helpful for the Commission in determining which course to pursue.

A copy of this letter is being filed in the above-referenced proceedings.

Respectfully submitted,

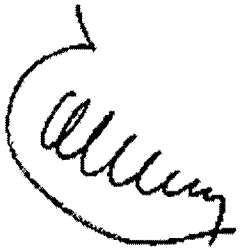

Jose Martin
Executive Vice President

Cc: David Furth
Michael Wilhelm
Roberto Mussenden
Brian Marenco
John Evanoff
Dana Zelman
Daniel Miktus

MODULATION SCHEMES SPECIFICATION

(NOTE: EXTRACT OF INTERNAL DESIGN SPECIFICATION OF PRODUCTS HTT-500, MDT-400 AND BSR75)

1. DEFINITION

PowerTrunk Part 90 compliant equipment, 4-slot TDMA with emission designators 20K0xxx, uses the following equation for the modulated signal at carrier frequency fc:

$$M(t) = \mathrm{Re}\left\{ s(t) * e^{J(2*\pi*f_c*t+\phi_0)} \right\}$$

Where:

ϕ_0 :Arbitrary phase

S(t) is the complex envelope of the modulated signal defined as:

$$s(t) = \sum_{k=0}^{K} S(k) * g(t - t_k)$$

Where:

K: Maximum number of symbols.

T: Symbols durations.

t_k=k*T is the symbol time corresponding to modulation symbol S(k).

g(t) is the ideal symbol waveform, obtained by the inverse Fourier Transform of RRC (Root-Raised Cosine) spectrum G(f) with roll-off factor α =0.2.This RRC filter is an audio low pass filter.

$$G(f) = 1 \qquad for \qquad |f| \le \frac{1-\alpha}{2T}$$

$$G(f) = \sqrt{0.5*\left(1 - \sin\left(\pi\left(\frac{2*|f|*T-1}{2*\alpha}\right)\right)\right)} \qquad for \qquad \frac{1-\alpha}{2T} \le |f| \le \frac{1+\alpha}{2T}$$

$$G(f) = 0 \qquad for \qquad |f| \ge \frac{1+\alpha}{2T}$$

S(k): Modulation symbol shall result from a differential encoding. S(k) is obtained applying the phase transition D_Φ (k) to the previous modulation symbol S(k-1):

$$S(k) = S(k-1) * e^{J*D_\phi(k)}$$

$$S(0) = 1$$

Modulation Bits		Phase Transitions
B(2k-1)	B(2k)	D_Φ (k)
1	1	-3*π / 4
0	1	+3*π / 4
0	0	+ π / 4
1	0	- π / 4

Table I. Phase Transition for π/4-DQPSK

The next expression is obtained from the previous equations:

$$M(t) = \mathrm{Re}\left\{ s(t) * e^{j(2*\pi*f_c*t+\phi_0)} \right\} = \mathrm{Re}\left\{ \sum_{k=0}^{K} S(k-1) * e^{j*D_\phi(k)} * g(t-t_k) * e^{j(2*\pi*f_c*t+\phi_0)} \right\} =$$

$$= \sum_{k=0}^{K} S(k-1) * g(t-t_k) * \cos(2*\pi*f_c*t+\phi_0+D_\phi(k))$$

2. MODULATION SCHEME

The modulation scheme including the signal previously described is shown below:

a) Mobile and portable transmitters:

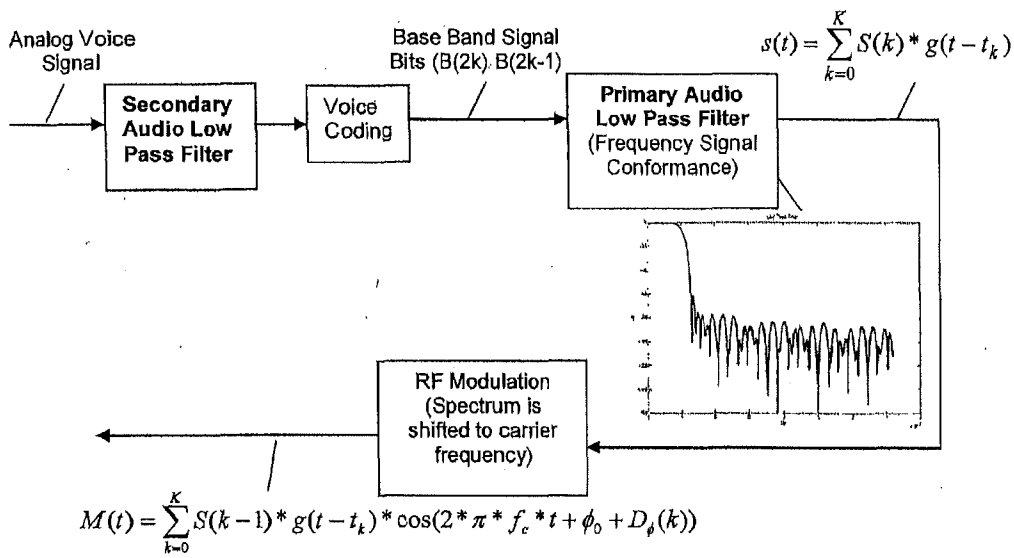

In order to meet FCC Part 90 Occupied Bandwidth and Emission Mask limitations specified in Sections 90.209 and 90.210, the **Primary Audio Low Pass Filter** is based on the TETRA standard Root Raised Cosine (RRC) filter with a roll-off factor of 0.35, but adapted for FCC requirements with a roll-off factor of 0.2. This **Primary Audio Low Pass Filter** is implemented in mobiles using CML Base Band Processor part number CMX980A. This **Primary Audio Low Pass Filter** is implemented in portables using CML Base Band Processor part number CMX981.

The **Secondary Audio Low Pass Filter** is also necessary in order to adequately provide the voice signal to the next signal processing blocks and avoid malfunctions. This filter is implemented in mobiles using Texas Instruments Codec part number TLV320AIC12 and in portables using STMicroelectronics Codec part number STw5093.

b) Base station / repeater:

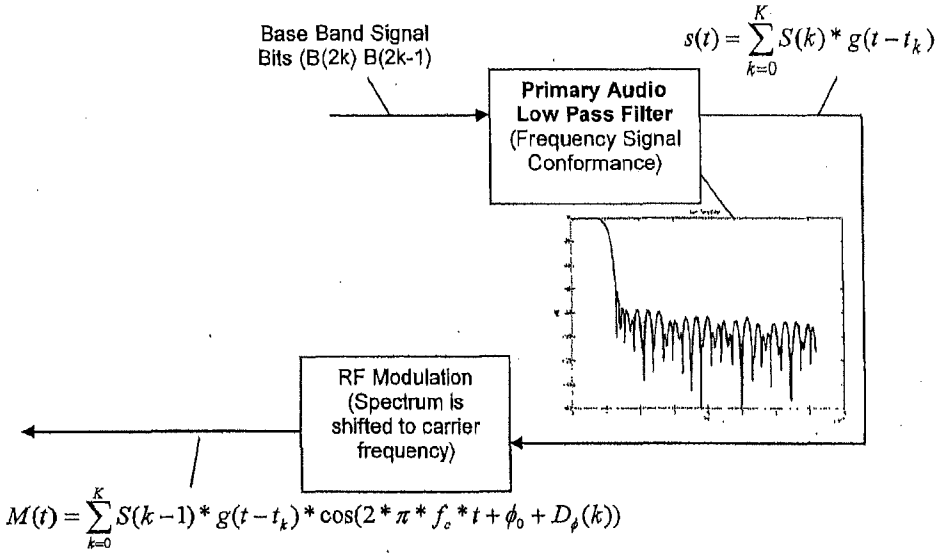

In order to meet FCC Part 90 Occupied Bandwidth and Emission Mask limitations specified in Sections 90.209 and 90.210, the **Primary Audio Low Pass Filter** is based on the TETRA standard Root Raised Cosine (RRC) filter with a roll-off factor of 0.35, but adapted for FCC requirements with a roll-off factor of 0.2. This **Primary Audio Low Pass Filter** is implemented using CML Base Band Processor part number CMX980A.