White Space Database Administrator Group

Database-to-Database Synchronization Interoperability Specification

Version 1.2.0 December 11, 2012

Copyright © 2011-2012 Airity, Inc., Comsearch, a CommScope Company, Frequency Finder, Inc., Google Inc., LS telcom AG, Microsoft Corporation, Neustar, Inc., Spectrum Bridge, Inc., Telcordia Technologies, Inc.

All Rights Reserved

Version	Date	Change
V1.0	8/30/11	Initial Release
V1.01	9/12/11	Change XSD to specify Circle + Radius for LP-Aux and add associated elements, updated XSD and XML Example
V1.1	2/29/12	1) Change LP Aux to conform to new FCC rules on location 2) Change LP_Aux to allow for unlicensed wireless microphone registrations (event changes) 3) Document the expected interoperability behavior for TV Receive Site registration records 4) Clarify use of date and date-time for event start and end times, 5) Clarify usage of ical:uid and ical:dtstamp, and ical:recurid per ical specification RFC 5545 6) Update schema and examples
V1.1.1	4/17/12	Added support for unlicensed wireless mics using FCC data, clarified version specification for file names.
V1.2.0	9/11/12	• Added presentationTime to Event objects • Added ability to handle multiple VEVENTs per registration record • Removed special date-time language to maintain consistency with ical standard • Renamed ensembleSignature to Signature and moved it to the end of RegistrationRecordEnsemble • Added Version to poll request and response • Added text for how new versions are introduced • Updated Web Services-related elements in schema (nextTransactionID and XsdVersion in RealTimePollResponse, RT-PollStatusCode) • Generated new XML examples based on V1.2 XSD • Changed XSD to accommodate changes in GML as discussed at http://www.opengeospatial.org/blog/1597, specifically changes related to xlink. • Specified maximum length of xsd:string data is 64 characters • Added nextTransactionID to RealTimePollResponse • Added Sec 7.5 Common Language for Information Disclosure in overstrike text, awaiting final language

V1.2.0	12/11/12	• Created new XSD XSD_V1-2_Checkpoint_11-21-12.xsd
		  ○ ref= in Signature element
		  ○ Remove WSDL-specific elements
		• Created XSD_V1-2_WSDL-Specific_11-21-12.xsd and updated Section 4 Real Time Web Service
		• Updated WSDL to WSDL_V1-2_Checkpoint_11-21-12.wsdl
		• Updated all six XML examples to validate with XSD_V1-2_Checkpoint_11-21-12.xsd
		• Added Section 7.5 Common Language for information disclosure

This interface specification was developed by the White Space Database Administrator Group.

NOTE - The user's attention is called to the possibility that compliance with this interface may or may not require use of an invention covered by patent rights. By publication of this standard, no position is taken with respect to the validity of any claim or any patent rights in connection therewith. No express or implied license is granted to a user of the interface who is not a participant in the White Spaces DBA Group for any intellectual property contributed by a White Spaces DBA Group participant.

Notice of Disclaimer and Limitation of Liability

The information provided in this document is directed solely to professionals who have the appropriate degree of experience to understand and interpret its contents in accordance with generally accepted engineering or other professional standards and applicable regulations. No recommendation as to products or vendors is made or should be implied.

NO REPRESENTATION OR WARRANTY IS MADE THAT THE INFORMATION IS TECHNICALLY ACCURATE OR SUFFICIENT OR CONFORMS TO ANY STATUTE, GOVERNMENTAL RULE OR REGULATION, AND FURTHER, NO REPRESENTATION OR WARRANTY IS MADE OF MERCHANTABILITY OR FITNESS FOR ANY PARTICULAR PURPOSE OR AGAINST INFRINGEMENT OF INTELLECTUAL PROPERTY RIGHTS. THE WHITE SPACE DATABASE ADMINISTRATOR GROUP AND ITS PARTICIPANTS SHALL NOT BE LIABLE, BEYOND $100 FOR THIS DOCUMENT, WITH RESPECT TO ANY CLAIM, AND IN NO EVENT SHALL THE WHITE SPACE DATABASE ADMINISTRATOR GROUP AND ITS PARTICIPANTS BE LIABLE FOR LOST PROFITS OR OTHER INCIDENTAL OR CONSEQUENTIAL DAMAGES. THE WHITE SPACE DATABASE ADMINISTRATOR GROUP ADVISES ANY AND ALL USE OF OR RELIANCE UPON THIS INFORMATION PROVIDED IN THIS DOCUMENT IS AT THE RISK OF THE USER.

Table of Contents

1 Background ... 3
1.1 Possible Methods to interchange records that were considered by the White Space DBA Group ... 3
1.1.1 Real Time ... 3
1.1.2 File Transfer ... 3
1.1.3 Database Replication ... 3
1.2 Conclusions ... 4
1.3 Glossary ... 4
2 Data Layout ... 4
3 File Transfer method: ... 5
4 Real Time Web Service ... 6
5 Data Format ... 10
5.1 RegistrationRecordEnsemble ... 11
5.2 Registration Record ... 13
5.3 Registration Information and Registration Disposition ... 13
5.4 Registration Objects ... 15
5.4.1 MVPD_Registration ... 15
5.4.2 TV_Receive Site_Registration ... 15
5.4.3 LP-Aux_Registration (Licensed and Unlicensed) ... 17
5.4.4 Fixed TVBD_Registration ... 20
5.4.5 Temp_BAS_Registration ... 20
5.5 EnsembleDescription ... 22
5.6 RegistrationDisposition ... 24
5.7 Location ... 25
5.8 US_TV_Spectrum ... 25
5.9 Event ... 26
5.10 DeviceId ... 28
5.11 Radiation Center ... 29
5.12 vCard ... 29
5.13 Signature Element ... 30
5.14 lpauxOperationalArea ... 31
5.15 RealTimePollRequest ... 33
5.16 RealTimePollResponse ... 34
5.17 lpauxPointArea ... 34
5.18 lpauxQuadrilateralArea ... 35
6 Data Mapping Considerations ... 36
6.1 Data Completeness ... 37
7 General Whitespace Administrator Responsibilities and Error Management 37
7.1 Set-up and process ... 37
7.1.1 Servers and clients ... 37
7.1.2 HTTPS ... 37
7.2 Client Test Environment ... 38
7.3 Error management ... 38
7.4 Releasing new versions of this document ... 39
7.5 Common Language for information disclosure ... 39

8 Parking Lot for V1.2 40

9 Appendix A - Example Records 41

9.1 LP-Aux Examples 41

9.1.1 Licensed, Point Area 41

9.1.2 Licensed, Quad Area 44

9.1.3 Unlicensed 46

9.2 Fixed TVBD Example 48

9.3 MVPD Example 50

9.4 TV Receive Site Example 51

9.5 Temp BAS Link Example 52

10 Appendix B - XML Schema 54

11 Appendix C – Real Time Poll Web Services WSDL 67

1 Background

The purpose of this document is to describe the method for White Space Database (WSDB) Operators in the United States TV band to interchange records of protected entities and fixed TVBD that are registered by one WSDB operator, but must be supplied to all other WSDB Operators per Federal Communications Commission (FCC) rules.

1.1 Possible Methods to interchange records that were considered by the White Space DBA Group

Three methods were considered for exchanging records

- Real time
- File Transfer
- Database Replication

1.1.1 Real Time

Records may be exchanged between providers in real time as updates to the registrations occur. Real time is typically implemented as some form of web service. Two mechanisms may be used:

"Pull" where the server (the provider with the record) waits until the client (the provider who wants the record) to query it for updates. The client queries, and the server responds with all changes that have occurred since the last query. Options may exist to obtain all records for start up or failure recovery purposes.

"Push" where the server sends records as they are generated to each client. This may use a subscribe/publish mechanism, or an equivalent web service.

Both push and pull mechanisms are often deployed.

1.1.2 File Transfer

A set of records is stored in a file, and the files are retrieved using a secure file transfer protocol. Both full set and incremental files can be created and retrieved.

1.1.3 Database Replication

Mechanisms exist for maintaining replicas of a database. A common set of table definitions is established, and a toolset is employed that automatically replicates the tables on other systems. Some proprietary mechanisms allow multiple masters. Others, including some open source versions, have a single master and multiple replicas, maintained automatically. For the former, all providers would share a single set of records, and any provider could add/delete or modify the

records. For the latter, a table would be maintained on each provider's system for each of the other providers and changes in the master would be automatically replicated in each of the replicas.

1.2 Conclusions

Both file transfer and real time methods must be supported by all WSDB Administrators. The initial transport for both bulk loads and incremental updates will be via SFTP. Upon implementation of the Web Services it shall be used for Incremental Updates only. The SFTP implementation will be continued for doing Bulk Loads.

1.3 Glossary

Registration Ensemble	The root element of the XML document that constitutes the message exchanged by WSDB Providers. There is one per message (either file FTP or Real Time Poll) and wraps the Registration Objects
Registration Object	The object which represents an individual Registration event, of any of the five types: MVPD_Registrant, TV_Receive_Site_Registration, LP-Aux_Registration, Fixed_TVBD_Registration, Temp_BAS_Registration
Registration Disposition	The element which contains meta-information about a Registration Object, such as the time of Registration and the Registration ID
Reservation Object	An element of type Event (used in LP-Aux_Registration and Temp_BAS_Regsitration) used to indicate the start and end time of requested protection, either as a single event or a recurring event.

2 Data Layout

The registration information is encoded within an XML document containing a <RegistrationRecordEnsemble> element as its root element (see below). The Ensemble may contain a series of Registration objects from the five types based on the FCC Rules.

For example:

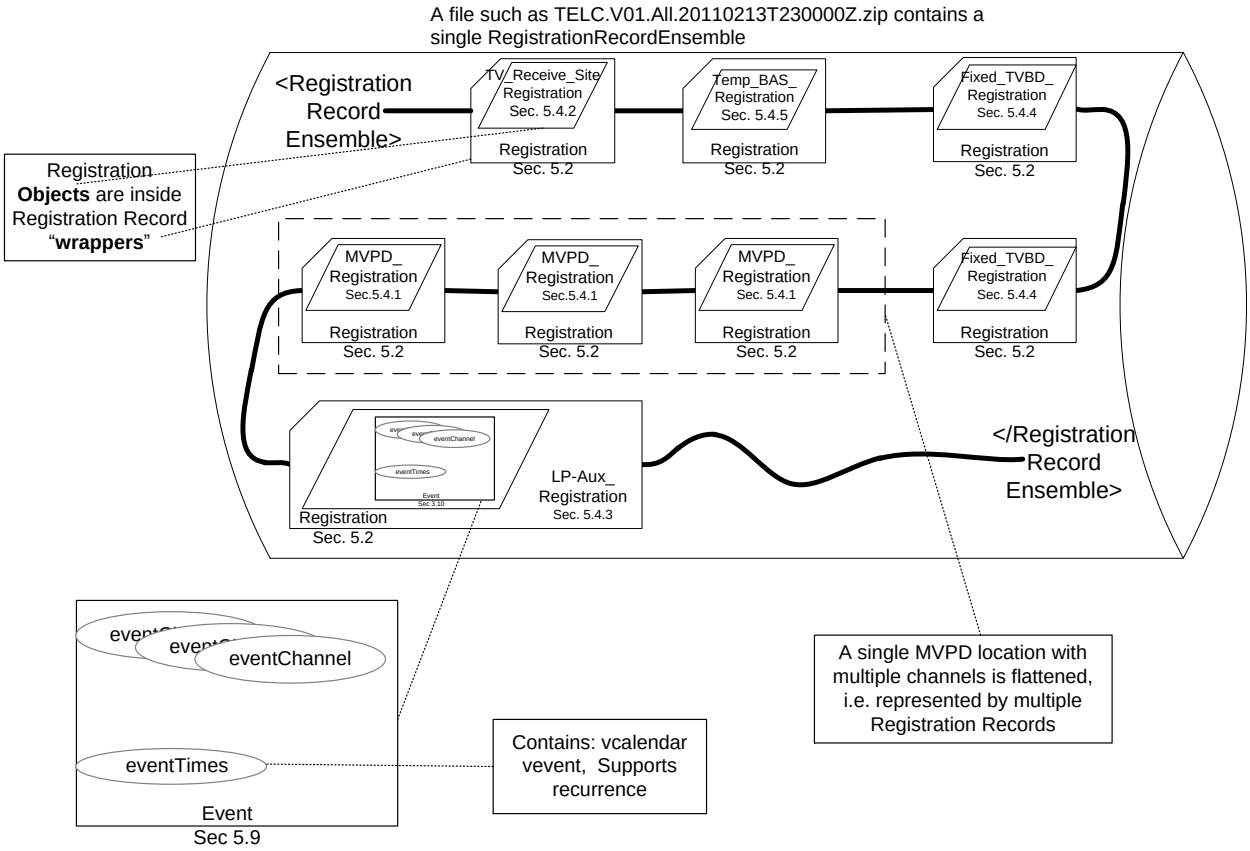

3 File Transfer method:

The files shall reside in datastores operated individually by the WSDB Administrators. Within each WSDB Administrator's area the files shall be of two kinds. There will be Full files containing all past registrations and Incremental files containing only the previous day's incremental registrations. Incremental files shall be updated hourly but if no incremental information needs to be transmitted, empty files need not be written. Full data files shall be updated daily until web services are deployed, when files are generated on request of any WSDB Administrator. Each WSDB Administrator may retrieve files from any other WSDB at any time. All files shall be zip compressed.

The file naming conventions will encode information about the contents of the file. Files shall be named:

$TVBandsAdminName.V$Version.$FileType. $Timestamp.zip

Where

- TVBandsAdminName = " 4 characters, upper case: COMS, FFIN, GOOG, KBLS, KEYB, MSFT, NUES, SPBR, TELC, AIRI

- Version = NN (xsd specification version number, with no period, so that version 1.1 is represented as 11)
- FileType = "All" or "Incr"
- Timestamp = ISO 8601 date and time, Zulu time required, basic format. (“YYYYMMDDTHHmmssZ”)

Note that the letter ‘V’ appears explicitly in the version portion of the file name and the letters T and Z appear in the timestamp portion, for readability. An example name would thus be:

TELC.V11.All.20110213T230000Z.zip

which would be interpreted as a file containing all registration records received by Telcordia up to and including 11:00:00 PM GMT on February 13, 2011, and conforming to xsd version 1.1 of this Interoperability Specification.

A file contains one RegistrationRecordEnsemble, see Section 5.1. The RegistrationRecordEnsemble contains a NextTransactionID that can be used by the real time web service to retrieve changes in the database since the file was created. This can be used to initialize a new server, or to recover from a failure with records from the WSDB Administrator that created the file.

4 Real Time Web Service

The real time web service is an interface that provides a set of Insert/Delete/Modify transactions in real time as the database at any Administrator changes. The service uses Simple Object Access Protocol (SOAP) to manage the transfer of data. Data is in Extensible Markup Language (XML) format. Transaction Layer Security (TLS) provides a private and secure means for transferring data.

The basic mechanism is a “fast poll”. Clients of the server poll the server relatively rapidly to ask for updates. Poll intervals between 1 and 1000 seconds are allowed, determined by the client. The server responds with all transactions in the database since the last completed poll. In the poll, the client provides a “TransactionID” in the request. A new TransactionId is returned in the response, which is used in the next poll. TransactionIds no older than 72 hours are permitted; any poll with a transactionId older than this will generate an error in the poll. Clients who remain off-line for more than 72 hours will need to start with the latest daily file, which contains the transactionId that can be used after loading the file to retrieve all updates since the file was created. Each client must use the transactionID it receives, either from a file download or a prior transactionId in a subsequent poll. TransactionIds are not (necessarily) the same between clients. TransactionID streams are maintained independently by each WSDB Administrator (server side), and each server may use a different syntax for the transactionID.

It is planned that all WSDB Administrators will provide two Services. One that is published for access to the “Production” TV Band White Space registrations and a second distinct Service that

is published for accessing "Test" TV Band White Space registrations. The Test data is for the purpose of supporting and demonstrating interoperability amongst the WSDB Administrators when both parties are not in Production. All WSDB Administrators will provide the capability to access all Published Services.

The three tables below show the definitions of the elements that are involved in the Real Time Web Service. Note the sequence of events involving the TransactionID elements:

1) The client sends a RealTimePollRequest with a TID called RequestedTransactionID
2) The server responds with a RealTimePollResponse that has
    a. RequestedTransactionID which has the same value as the one it received
    b. NextTransactionID embedded in the RegistrationRecordEnsemble
3) The client uses the value of the NextTransactionID which it received as the RequestedTransactionID in its next RealTimePollRequest
4) In the event that more than 72 hours have elapsed since the last successful RealTimePollRequest and Response, then the client must receive the full file via SFTP "get". In this case also, a NextTransactionID will be embedded in the RegistrationRecordEnsemble for use in the subsequent RealTimePollRequest.

The RealTimePollRequest :

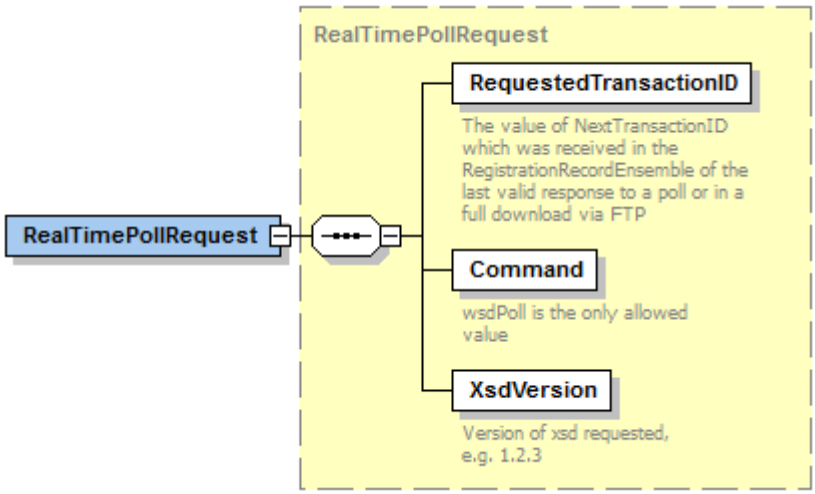


```
<RealTimePollRequest>
   <RequestedTransactionID> TransactionID </RequestedTransactionID> [1]
   <Command> ... </Command> [1] ?
   <XsdVersion> ... </XsdVersion> [1] ?
</RealTimePollRequest>
```

The RealTime Poll Response is:

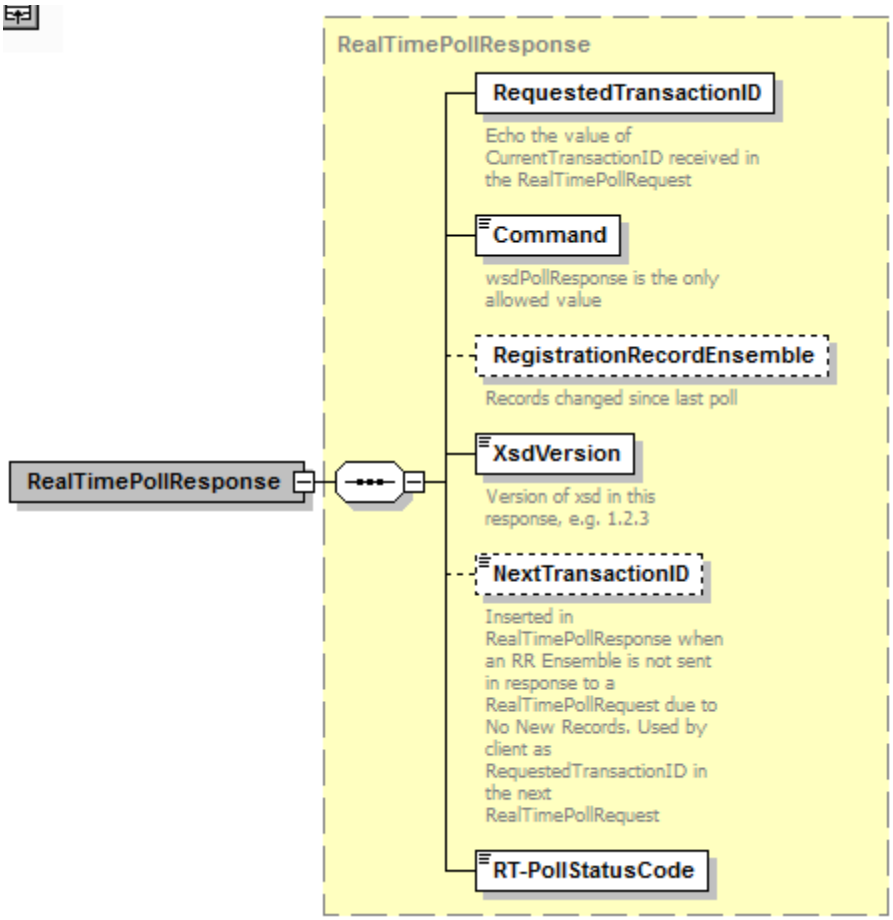


```
<RealTimePollResponse>
   <RequestedTransactionID> TransactionID </RequestedTransactionID> [1] ?
   <Command> xsd:string </Command> [1] ?
   <RegistrationRecordEnsemble> ... </RegistrationRecordEnsemble> [0..1] ?
   <XsdVersion> xsd:string </XsdVersion> [1] ?
   <NextTransactionID> xsd:string </NextTransactionID> [0..1] ?
   <RT-PollStatusCode> RT-PollResponseStatusCodeSeries </RT-PollStatusCode> [1]
</RealTimePollResponse>
```

The RT-PollStatusCode is an enumeration defined as follows:

0 = Success
1 = TransactionID stale, recover from file
2 = Bad Request
3 = Requested version not supported
4 = No New Records, (no RegistrationRecordEnsemble present)
5 = Server Error

The <XsdVersion> element in the request and the response represents the version of the schema requested by the receiving WSDB Administrator/sent by the sending Administrator. If the sending WSDB Administrator can support that version, the response must contain that version. If the sending WSDB Administrator cannot support the requested version, it returns the RT-PollStatusCode = 3.

The RegistrationRecordEnsemble must be sent as a CDATA string in the RealTimePollResponse, to prevent modification during transport in the SOAP envelope. For the ensemble Signature to validate, no changes are allowed to the entire RegistrationRecordEnsemble block. CDATA marks the content of the block to be interpreted only as character data, not as markup or entity references.

The RegistrationRecordEnsemble is optional in the RealTimePollResponse. For all poll response codes other than 0, no RegistrationRecordEnsemble will be returned. If the sending WSDB determines that there are no new records and the transactionID requested is not stale, then RegistrationRecordEnsemble will not be sent, and the RT-PollResponseCode will be set to 4. The poll response will include a nextTransactionID, which may or may not be the value in the request, to be used in the next poll request. If a nextTransactionID is required when no RegistrationRecordEnsemble is returned, it must be included in the RealTimePollResponse.

If a poll request is made more than 72 hours after the previous request AND new records have been added to the database, the response code will be 1. The duration of the polling period (currently 72 hours) may be changed later by the group. The receiving WSDB will need to download the latest file, which will contain a new nextTransactionID to be used on the poll request after the file is loaded.

As a simplification and convenience the WSDL-specific elements of the primary V1.2 XSD have been removed and placed into a WSDL-specific XSD. This allows the tools used to build the Web Services interface to avoid importing vcard, ical, and gml. In addition, this will allow the current scheme, which is based on declaring the RegistrationRecordEnsemble to be a string and treating it as a CDATA blob, to be enhanced and give visibility into the CDATA for additional processing such as checking the XSD Version, in the future (e.g. V1.3).

The WSDL-Specific XSD is attached in Appendix C and is called XSD_V1-2_WSDL-Specific_11-21-12.xsd.

The WSDL WSDL_V1-2_Checkpoint_11-21-12.wsdl is attached as Appendix D. Note in particular that the import statement in the WSDL refers to the “WSDL-Specific” XSD described above.

```
<xsd:schema>
        <xsd:import schemaLocation="XSD_V1-2_WSDL-Specific_11-21-12.xsd" namespace="http://www.whitespace-db-providers.org/2011//InterDB/ws"/>
</xsd:schema>
```

5 Data Format

The data is valid XML conforming to the schema located in Appendix B. It can be stated that the Schema IS the definition of the interface, because tools exist to determine the conformance of an arbitrary XML document to a specific Schema. Any data interchange message, whether transported by SFTP file transfer or by Web Services will only be accepted by a WSDBA if it conforms to the agreed-upon schema. If an arriving message does not conform, Error Handling procedures must be performed as described in Section 7. Long strings in exported XML may be truncated by the Receiving Database without generation of a message or indication of error. Truncated strings shall be no shorter than 100 characters.

This specification includes, by reference, these other XML Schema:

Schema	Purpose	Canonical prefix in WSDB objects	for more info see actual namespace URN

iCal	indication of event schedules	ical	`http://tools.ietf.org/html/draft-daboo-et-al-icalendar-in-xml-09`
			`also see: RFC5545`
			`urn:ietf:params:xml:ns:icalendar-2.0`

vCard	indication of personal contact info	vcard	`http://tools.ietf.org/html/draft-ietf-vcarddav-vcardxml-10` `urn:ietf:params:xml:ns:vcard-4.0`
GML	Polygon data types	gml	`http://www.opengis.net/gml`
XSD	standard XML Schema types	xsd	`http://www.w3.org/2001/XMLSchema`
XML-DSig	signing of records by original registrar	ds	`http://www.w3.org/2000/09/xmldsig`

Thus, the <RegistrationRecordEnsemble> would typically include these namespace declarations:

```
<RegistrationRecordEnsemble
   xmlns="http://www.whitespace-db-providers.org/2011//InterDB/xsd"
   xmlns:xsd=" http://www.w3.org/2001/XMLSchema"
   xmlns:ical="urn:ietf:params:xml:ns:icalendar-2.0"
   xmlns:vcard="urn:ietf:params:xml:ns:vcard-4.0"
```

```
   xmlns:gml="http://www.opengis.net/gml"
   xmlns:ds="http://www.w3.org/2000/09/xmldsig#"
>
```

5.1 RegistrationRecordEnsemble

The root element of the file and the base element of the real time response is a RegistrationRecordEnsemble. The ensemble contains any number of Registration objects.

The RegistrationRecordEnsemble is signed by the Signature element as described in Section 5.13.

Each file or response is a series of Registration Records, one per registered object. Each Registered Record would contain the Type of the object, the Date on which the object was registered, and registration information which would vary according to the object Type: MVPD, TV Receive Site, LP-Aux, Temporary BAS Links and Fixed TVBD. The RegistrationRecordEnsemble will contain a NextTransactionID to be used in the Realtime Web Services method to convey to the Web Services client the value it should use for RequestedTransactionID in the next RealTimePollRequest that it sends.

Since the content of the file or response must be well formed XML, an overall root node message is defined to contain all of the Registration elements. The RegistrationRecordEnsemble contains an inline attribute version=n.n to indicate the version of the Inter-WSDB Messaging Specification which the contents conform to, for example

```
<RegistrationRecordEnsemble version="1.0">
```

Message Definition: RegistrationRecordEnsemble (wsd:RegistrationRecordEnsemble)

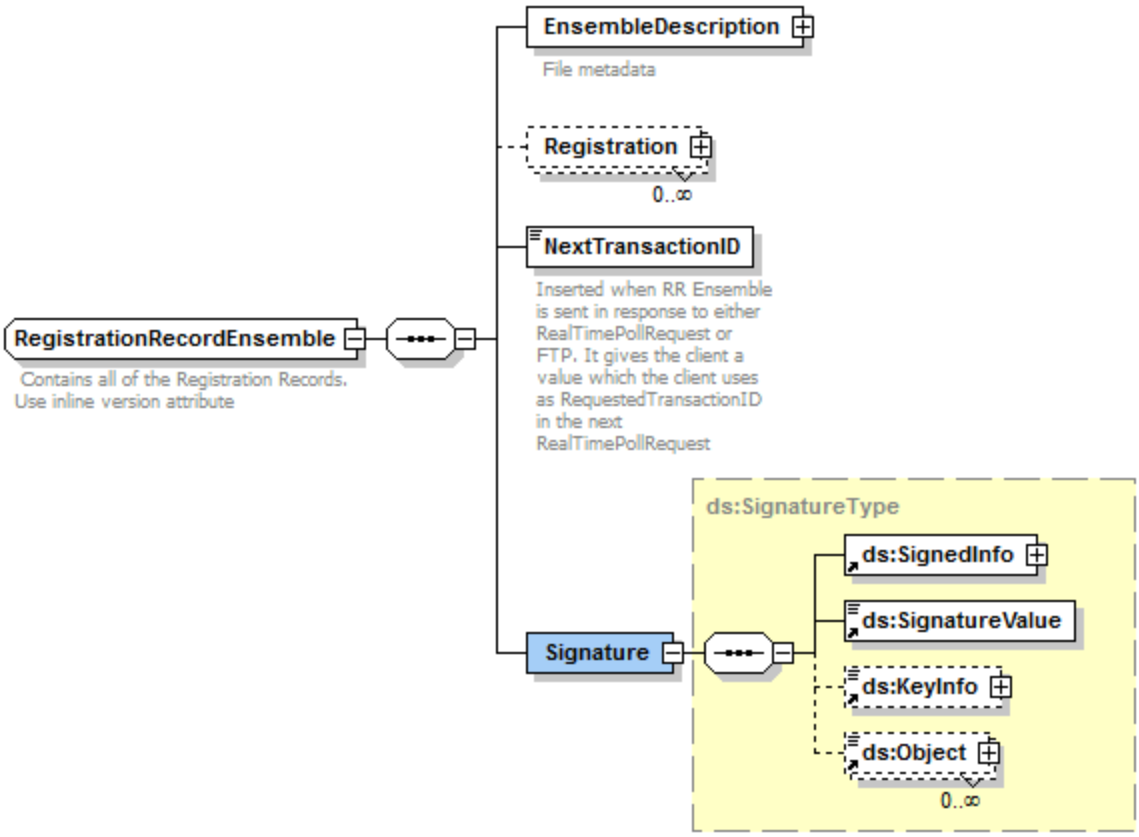


```
<RegistrationRecordEnsemble
 version="xsd:string [1]">
   <EnsembleDescription> EnsembleDescription </EnsembleDescription> [1] ?
   <Registration> Registration </Registration> [0..*]
   <NextTransactionID> xsd:string </NextTransactionID> [1] ?
   <Signature> ds:SignatureType </Signature> [1]
</RegistrationRecordEnsemble>
```

The Signature element signs the entire RegistrationRecordEnsemble. This is equivalent to signing each individual Registration record.

High-level logic:

1. Upon receiving an interDB file or poll response, check that its [per file/response] signature is valid. If so, process the records.

2. Make sure the filename of the validated file is unique (if necessary, add a timestamp to the filename) for file transfer.

3. Associate with each inserted record the [now unique] filename (for file transfer) or TransactionId (for real time).

4. Archive the validated file/response for later use in non-repudiation, should it be needed.

5. If a record is contested:
    a. Find the record in question; look up its source filename/response
    b. Retrieve that source file/response; demonstrate that it has a valid signature
    c. Show that the record in question was derived from that file/response

The signing function is by means of the "Enclosed" strategy of XMLDsig such that the SignedInfo points to the RegistrationRecordEnsemble Object using Xpath. The SignatureValue calculated by the sending WSDB is also present in the Signature element for comparison. More details are given in Section 5.13 and the Solved Examples in Appendix A.

See Section 5 for a description of the TransactionId.

5.2 Registration Record

Each protected entity is represented by one or more Registration Records:

Message Definition: Registration (wsd:Registration)

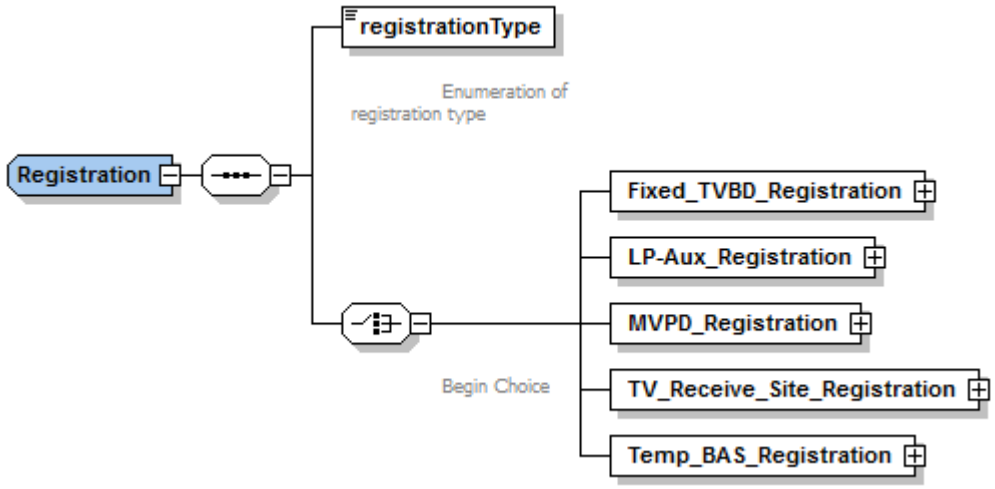


```
<Registration>
  <registrationType> xsd:string </registrationType> [1] ?
  Start Choice [1] ?
    <Fixed_TVBD_Registration> Fixed_TVBD_Registration </Fixed_TVBD_Registration> [1]
    <LP-Aux_Registration> LP-Aux_Registration </LP-Aux_Registration> [1]
    <MVPD_Registration> MVPD_Registration </MVPD_Registration> [1]
    <TV_Receive_Site_Registration> TV_Receive_Site_Registration </TV_Receive_Site_Registration> [1]
    <Temp_BAS_Registration> Temp_BAS_Registration </Temp_BAS_Registration> [1]
  End Choice
</Registration>
```

5.3 Registration Information and Registration Disposition

Each Registration Object contains elements that are defined by the FCC rules appropriate for that facility (MVPD, LP-Aux, TV Receive Site, Fixed TVBD and Temp_BAS_Registration). It also contains a Registration Disposition object that contains metadata about the object, especially the Action element.

This snippet shows a Registration Disposition element. More examples are given in Appendix A.

```
       <RegistrationDisposition>
          <RegistrationDate>2011-03-17 17:26:03Z</RegistrationDate>
          <Action>1</Action>
          <RegistrationStatusCode>1</RegistrationStatusCode>
          <RegistrationDescription>No match of transmitter call sign/channel/location to
CDBS</RegistrationDescription>
      </RegistrationDisposition>
```

Note that the first Registration Object element (MVPD_Registration) is defined to be “flattened” such that each transmitter and receiver pair location is registered as a separate object. See Appendix A for an example MVPD Registration Object.

Note: for all of the following registration objects where the TV transmitter is a required element the agreement is to edit the registered values against the FCC data and to provide where possible valid data. If the receiving WSDB Administrator determines that the values provided do not match the FCC data they have the option to substitute their derived values for calculation of the protected area and will inform the sending WSDB Administrator of the discrepancy.

5.4 Registration Objects

5.4.1 MVPD_Registration

Message Definition: MVPD_Registration (wsd:MVPD_Registration)

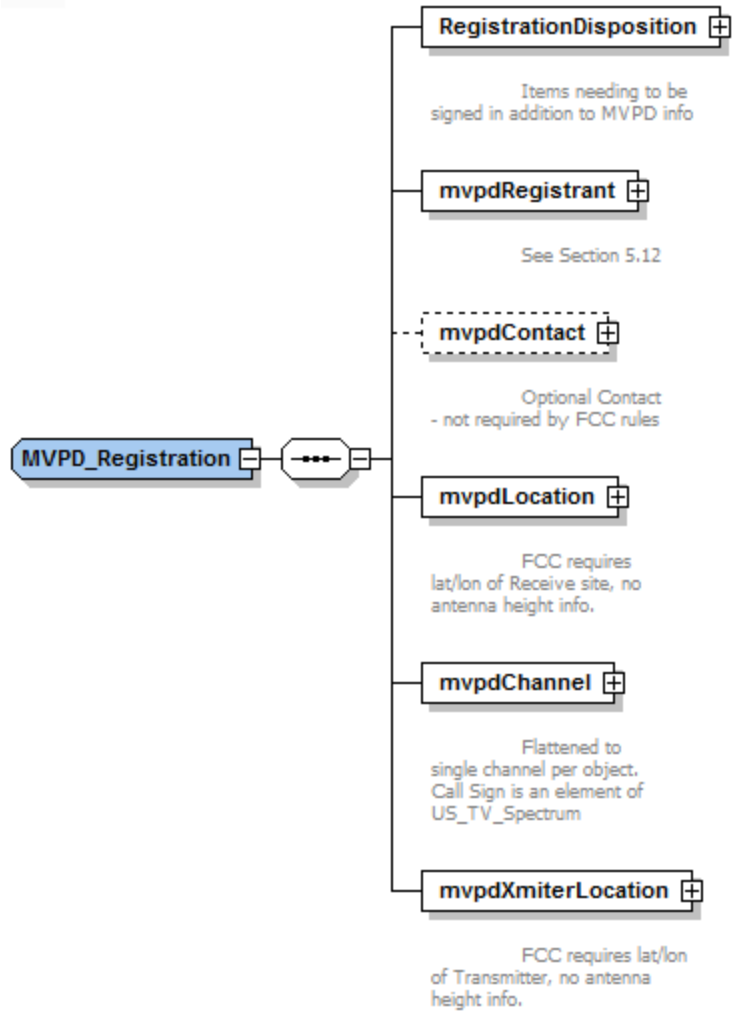


```
<MVPD_Registration>
  <RegistrationDisposition> RegistrationDisposition </RegistrationDisposition> [1] ?
  <mvpdRegistrant> vcard:VcardType </mvpdRegistrant> [1] ?
  <mvpdContact> vcard:VcardType </mvpdContact> [0..1] ?
  <mvpdLocation> Location </mvpdLocation> [1] ?
  <mvpdChannel> US_TV_Spectrum </mvpdChannel> [1] ?
  <mvpdXmiterLocation> Location </mvpdXmiterLocation> [1] ?
</MVPD_Registration>
```

5.4.2 TV_Receive Site_Registration

Message Definition: TV_Receive_Site_Registration (wsd:TV_Receive_Site_Registration)

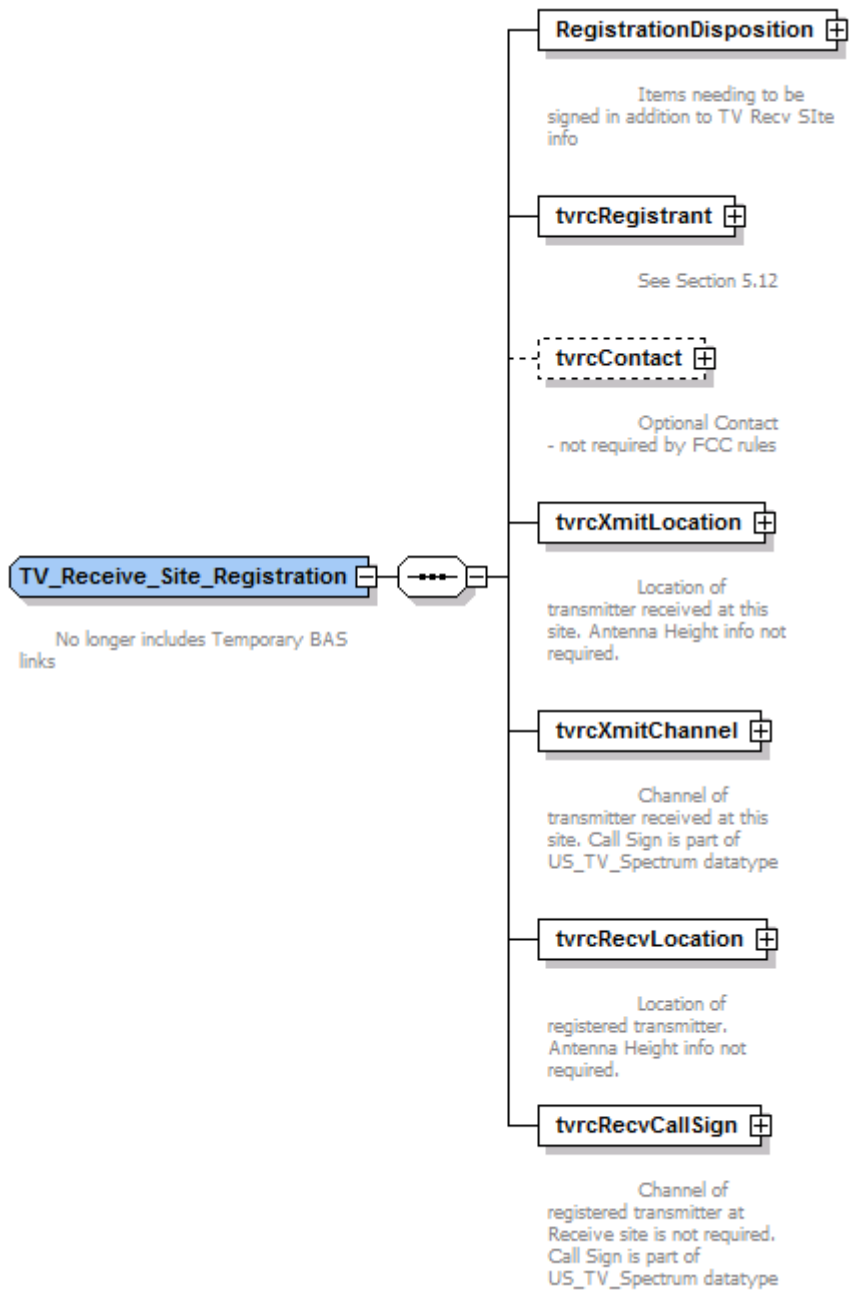


```
<TV_Receive_Site_Registration>
  <RegistrationDisposition> RegistrationDisposition </RegistrationDisposition> [1] ?
  <tvrcRegistrant> vcard:VcardType </tvrcRegistrant> [1] ?
  <tvrcContact> vcard:VcardType </tvrcContact> [0..1] ?
  <tvrcXmitLocation> Location </tvrcXmitLocation> [1] ?
  <tvrcXmitChannel> US_TV_Spectrum </tvrcXmitChannel> [1] ?
  <tvrcRecvLocation> Location </tvrcRecvLocation> [1] ?
  <tvrcRecvCallSign> US_TV_Spectrum </tvrcRecvCallSign> [1] ?
</TV_Receive_Site_Registration>
```

5.4.3 LP-Aux_Registration (Licensed and Unlicensed)

Message Definition: LP-Aux_Registration (wsd:LP-Aux_Registration)

The LP-Aux_Registration element supports both licensed and unlicensed registrations. For licensed registrations, the Operational Area must be specified, and the Call Sign element contains the actual registered call sign. For an unlicensed registration, the Operational Area is not specified, and the Call Sign element contains the call sign equivalent from the FCC ULS database. A flag is provided to explicitly specify licensed or unlicensed.

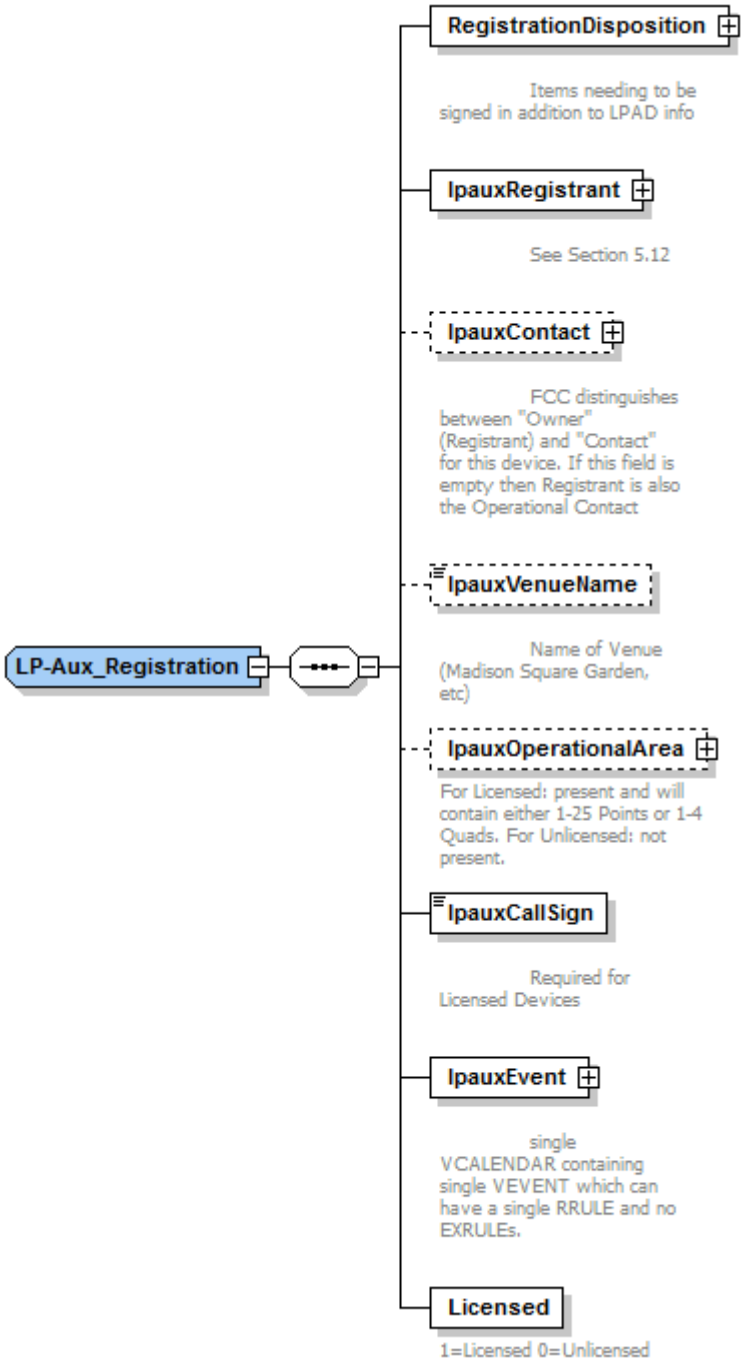
LP-Aux_Registration
RegistrationDisposition
Items needing to be signed in addition to LPAD info
IpauxRegistrant
See Section 5.12
IpauxContact
FCC distinguishes between "Owner" (Registrant) and "Contact" for this device. If this field is empty then Registrant is also the Operational Contact
IpauxVenueName
Name of Venue (Madison Square Garden, etc)
IpauxOperationalArea
For Licensed: present and will contain either 1-25 Points or 1-4 Quads. For Unlicensed: not present.
IpauxCallSign
Required for Licensed Devices
IpauxEvent
single VCALENDAR containing single VEVENT which can have a single RRULE and no EXRULEs.
Licensed
1=Licensed 0=Unlicensed

```
<LP-Aux_Registration>
   <RegistrationDisposition> RegistrationDisposition </RegistrationDisposition> [1] ?
   <lpauxRegistrant> vcard:VcardType </lpauxRegistrant> [1] ?
   <lpauxContact> vcard:VcardType </lpauxContact> [0..1] ?
   <lpauxVenueName> xsd:string </lpauxVenueName> [0..1] ?
   <lpauxOperationalArea> [0..1] ?
      Start Choice [1]
         <lpauxPointArea> PointAreaNew </lpauxPointArea> [1..25] ?
         <lpauxQuadrilateralArea> QuadrilateralAreaNew </lpauxQuadrilateralArea> [1..4] ?
      End Choice
   </lpauxOperationalArea>
   <lpauxCallSign> xsd:string </lpauxCallSign> [1] ?
   <lpauxEvent> Event </lpauxEvent> [1] ?
   <Licensed> ... </Licensed> [1] ?
</LP-Aux Registration>
```

lpauxOperationalArea contains a set of points or quadrilateral simple polygons. If a polygon, there must be exactly 4 vertices forming a quadrilateral, in order, clockwise, with no intersecting sides (simple polygon). No more than 25 points or 4 quadrilaterals are permitted for a single registration and they may not be mixed. See Channel Calculations for White Spaces Guidelines for the specifics regarding dimensions.

For unlicensed wireless microphones the Receiving Database's local FCC ULS data takes precedence over data received in imported XML except for event time data in which case the imported data takes precedence.

- The Registrant may be copied from the ULS file, or may be a different person who registers.
- Contact is optional and if not provided is assumed to be the same as the ULS registrant.
- Venue name and Operational Area should be ignored if different from FCC ULS data

There is an unlikely race condition, where the registrar has both downloaded a new version of the FCC unlicensed data files *and* a registrant has registered for protection, with both occurring before the receiving database provider has downloaded the latest version of the FCC unlicensed data files. The receiving database provider should download the latest ULS file if it does not find the registration.

The ULS file contains Grant and Expired dates. The sending database provider must assure that all of the following are true:

- in the <lpauxEvent>, the <ical:dtstart> is not before the FCC-provided Grant Date
- in the <lpauxEvent>, for a one-time event, <ical:dtend> is not after the FCC-provided Expired Date
- in the <lpauxEvent>, for a recurring event, <ical:until> is not after the FCC-provided Expired Date
- in the <lpauxEvent>, for a recurring event, <ical:count> does not evaluate to after the FCC-provided Expired Date
- in the <lpauxEvent>, for a recurring event, one of <ical:count> or <ical:until> is specified
- in the <lpauxEvent>, the count of <eventChannel> is not greater than the FCC-provided Maximum Number of TV Channels

The receiving database provider shall ignore any registrations that violate the above and notify the sending database provider.

5.4.4 Fixed TVBD_Registration

Message Definition: Fixed_TVBD_Registration (wsd:Fixed_TVBD_Registration)

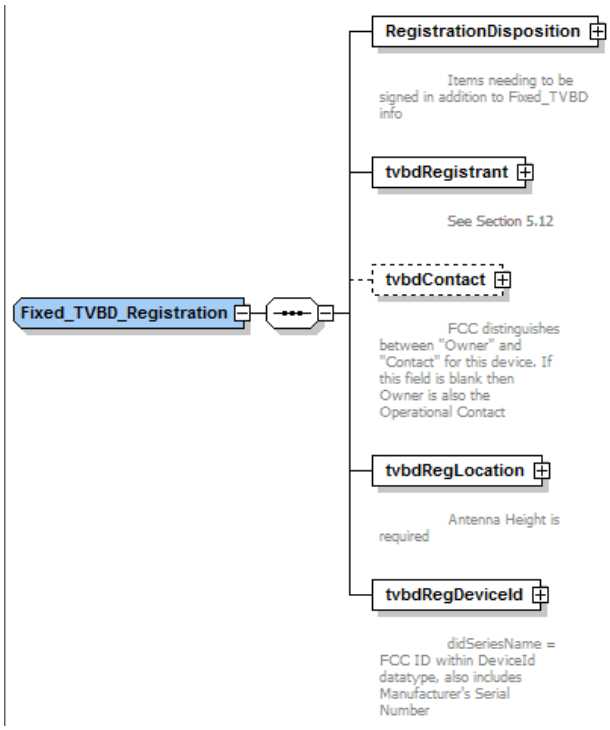


```
<Fixed_TVBD_Registration>
  <RegistrationDisposition> RegistrationDisposition </RegistrationDisposition> [1] ?
  <tvbdRegistrant> vcard:VcardType </tvbdRegistrant> [1] ?
  <tvbdContact> vcard:VcardType </tvbdContact> [0..1] ?
  <tvbdRegLocation> Location </tvbdRegLocation> [1] ?
  <tvbdRegDeviceId> DeviceId </tvbdRegDeviceId> [1] ?
</Fixed_TVBD_Registration>
```

5.4.5 Temp_BAS_Registration

Message Definition: Temp_BAS_Registration (wsd:Temp_BAS_Registration)

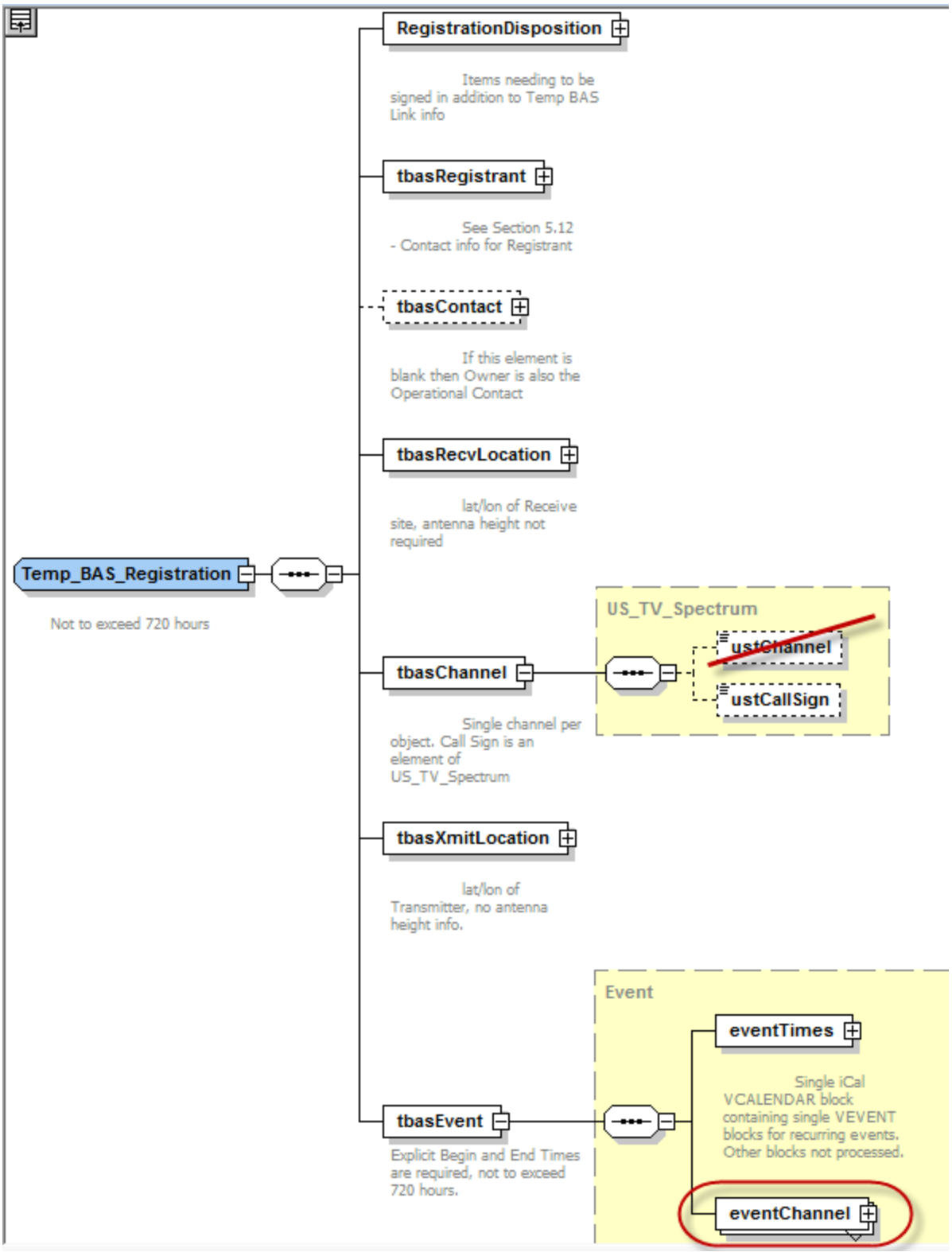
RegistrationDisposition
Items needing to be signed in addition to Temp BAS Link info
tbasRegistrant
See Section 5.12 - Contact info for Registrant
tbasContact
If this element is blank then Owner is also the Operational Contact
tbasRecvLocation
lat/lon of Receive site, antenna height not required
Temp_BAS_Registration
Not to exceed 720 hours
US_TV_Spectrum
ustChannel
ustCallSign
tbasChannel
Single channel per object. Call Sign is an element of US_TV_Spectrum
tbasXmitLocation
lat/lon of Transmitter, no antenna height info.
Event
eventTimes
Single iCal VCALENDAR block containing single VEVENT blocks for recurring events. Other blocks not processed.
tbasEvent
Explicit Begin and End Times are required, not to exceed 720 hours.
eventChannel

```
<Temp_BAS_Registration
 version="xsd:string [1]">
   <RegistrationDisposition> RegistrationDisposition </RegistrationDisposition> [1] ?
   <tbasRegistrant> vcard:VcardType </tbasRegistrant> [1] ?
   <tbasContact> vcard:VcardType </tbasContact> [0..1] ?
   <tbasRecvLocation> Location </tbasRecvLocation> [1] ?
   <tbasChannel> US_TV_Spectrum </tbasChannel> [1] ?
   <tbasXmitLocation> Location </tbasXmitLocation> [1] ?
   <tbasEvent> Event </tbasEvent> [1] ?
</Temp_BAS_Registration>
```

There is one channel per Temp_BAS_Registration record, and tbasChannel includes the Call Sign by means of the US_TV_Spectrum data type. The channel information is found in the tbasEvent, and not in tbasChannel. The ustChannel in tbasChannel is ignored.

5.5 EnsembleDescription

Message Definition: EnsembleDescription (wsd:EnsembleDescription)

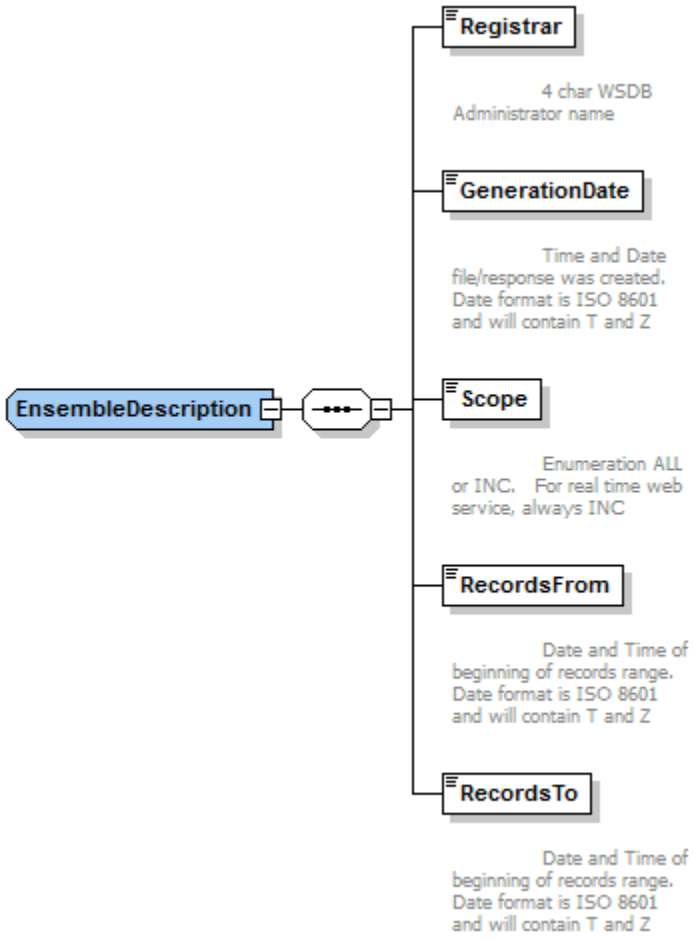

```
<EnsembleDescription>
  <Registrar> xsd:string </Registrar> [1] ?
  <GenerationDate> xsd:dateTime </GenerationDate> [1] ?
  <Scope> Scope </Scope> [1] ?
  <RecordsFrom> xsd:dateTime </RecordsFrom> [1] ?
  <RecordsTo> xsd:dateTime </RecordsTo> [1] ?
</EnsembleDescription>
```

5.6 RegistrationDisposition

Message Definition: RegistrationDisposition (wsd:RegistrationDisposition)

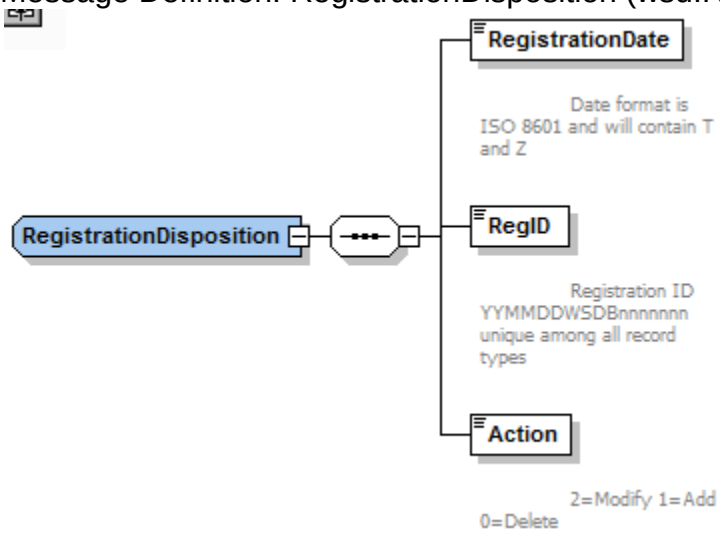


```
<RegistrationDisposition>
   <RegistrationDate> xsd:dateTime </RegistrationDate> [1] ?
   <RegID> xsd:string </RegID> [1] ?
   <Action> xsd:int </Action> [1] ?
</RegistrationDisposition>
```

Note: The regID has three parts: date per ISO 8601 YYMMDD, four character WSDB Administrator name (same as used in the filename Sec 4.1.2.1) and a seven digit sequence number 0000001-9999999 which starts at 0000001 each day and is incremented by 1 for each record regardless of type.

A modify (which must use the same RegId as the original registration) can contain any set of elements, which replace former values. If the modify record does not include values for optional elements specified in prior insert or modify records for this RegId, then the values of these optional elements will be treated as NULL values and will replace the former (non-NULL) values. Some records (LPAux and Temporary BAS Links) have events that specify times and dates where protection is provided. When a record has no active events, the record is still in the database, but no protection is provided. The record remains in the database until either a Modify transaction is completed to add an event, or the record is deleted. Records with no active events that persist for more than 180 calendar days can be considered deleted. Modifications are not supported beyond 180 days after expiration. Only the Administrator who created a record may modify or delete it.

5.7 Location

Message Definition: Location (wsd:Location)

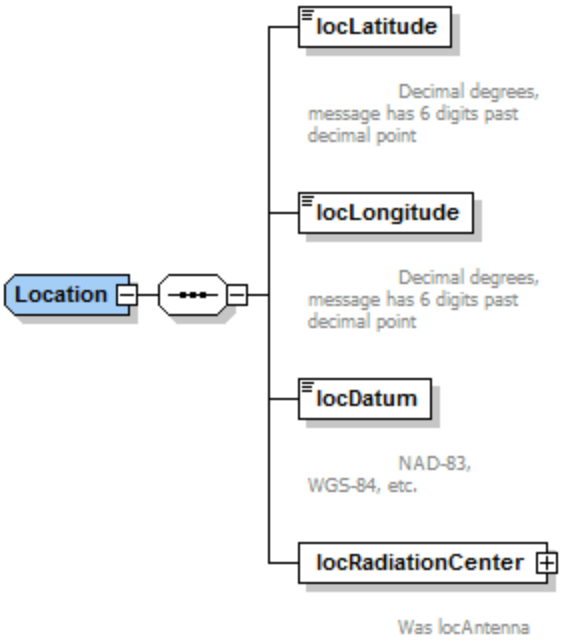


```
<Location>
   <locLatitude> xsd:double </locLatitude> [1] ?
   <locLongitude> xsd:double </locLongitude> [1] ?
   <locDatum> xsd:string </locDatum> [1] ?
   <locRadiationCenter> RadiationCenter </locRadiationCenter> [1] ?
</Location>
```

5.8 US_TV_Spectrum

Message Definition: US_TV_Spectrum (wsd:US_TV_Spectrum)

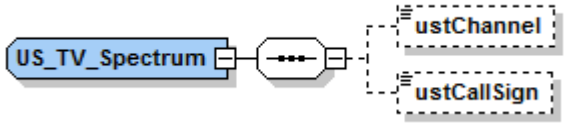


```
<US_TV_Spectrum>
   <ustChannel> xsd:int </ustChannel> [0..1]
   <ustCallSign> xsd:string </ustCallSign> [0..1]
</US_TV_Spectrum>
```

5.9 Event

Message Definition: Event (wsd:Event)

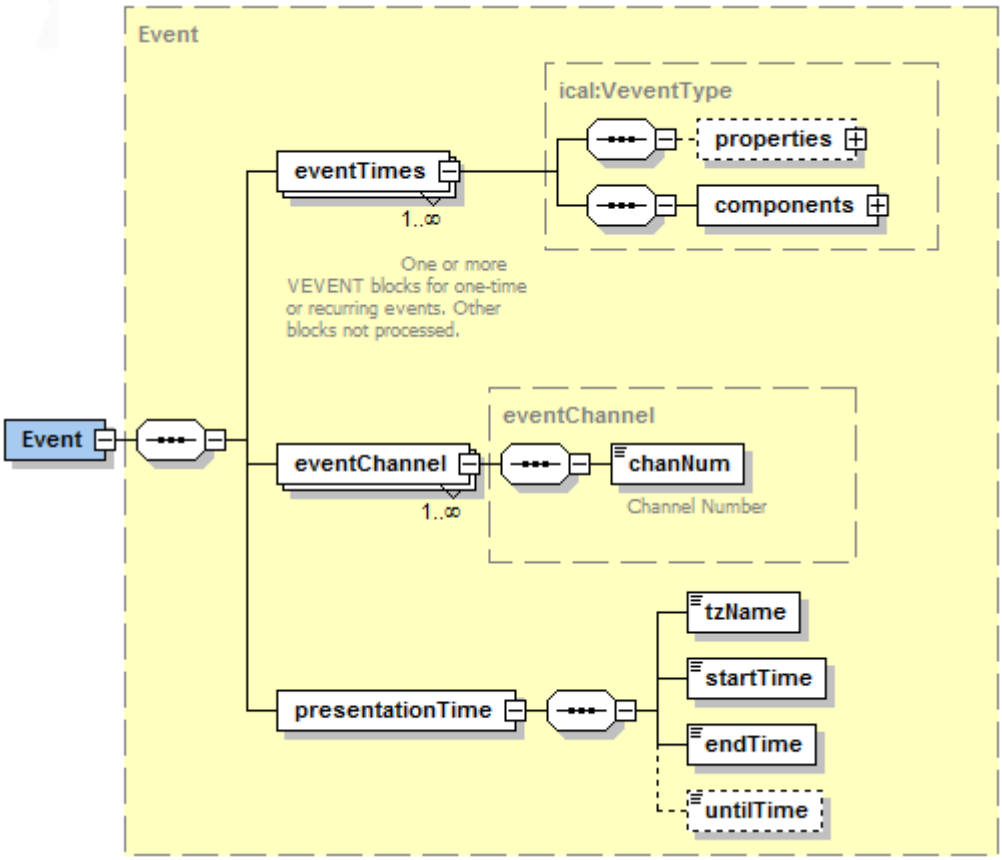


```
<Event>
   <eventTimes> ical:VeventType </eventTimes> [1..*]
   <eventChannel> eventChannel </eventChannel> [1..*]
   <presentationTime> [1]
      <tzName> xsd:string </tzName> [1]
      <startTime> ical:DateTimeType </startTime> [1]
      <endTime> ical:DateTimeType </endTime> [1]
      <untilTime> ical:DateTimeType </untilTime> [0..1]
   </presentationTime>
</Event>
```

Note: the iCal element shall be conformant to:
http://tools.ietf.org/html/draft-daboo-et-al-icalendar-in-xml-09
with field definitions from RFC5545
The schema that defines this version is:

https://www.bedework.org/svn/bwxml/releases/bedework-3.8/schemas/icalendar/iCalendar.xsd which is incorporated in the schema for this document.

The event shall contain one or more eventTimes (VEVENT), where each eventTimes element can have zero or one RRULE and no EXRULEs.
FREQ is limited to HOURLY, DAILY and WEEKLY. BYMINUTE, BYHOUR and BYDAY are the only BYxxx qualifiers permitted
INTERVAL, COUNT or UNTIL is allowed
The Start and End of an Event (recurring or not) are defined by an xcal:date-time element, not an xcal:date element. The sending Administrator shall provide both date and time components of this element.

The ical specification RFC 5545, requires ical:uid and ical:dtstamp. The ical:recurid is unnecessary given that only a single RRULE is supported.

Special consideration must be given to daylight savings time. All times specified in the exchanged registration data must be UTC time. If the event must be adjusted for daylight savings time, it will be split into multiple eventTimes elements. Adjustments for daylight savings time are done at the registering Administrator. Administrators receiving data always use UTC time to determine when protection is afforded.

To assist in the presentation of event time at a receiving Administrator, a presentationTime element shall be included with each registered event. This will contain the time zone name, start time, end time, and until time of the registration as the user entered it on the originating Administrator.

The time zone name (tzName) element shall be a string with the format "UTC±*hh*:*mm*[/DST]" (case sensitive), representing the time zone that the registrant used to enter their event reservation. The "±hh:mm" portion of the string indicates the number of hours and minutes offset of the time zone relative to UTC during standard time (non-DST times). An optional "/DST" string will be present if the time zone observes daylight savings time.

Examples of tzName use		
Place	**Time zone commonly known as**	**tzName**
New York	Eastern Time, EST/EDT	`UTC-05:00/DST`
Chicago	Central Time, CST/CDT	`UTC-06:00/DST`
Denver	Mountain Time, MST/MDT	`UTC-07:00/DST`
Phoenix	Arizona Time, MST (no DST)	`UTC-07:00`
Los Angeles	Pacific Time, PST/PDT	`UTC-08:00/DST`
Anchorage	Alaska Time	`UTC-09:00/DST`
Adak	Hawaii-Aleutian Time	`UTC-10:00/DST`
Hawaii	Hawaii Time	`UTC-10:00`
American Samoa	Samoa Time	`UTC-11:00`
Guam	Chamorro Time	`UTC+10:00`
Puerto Rico	Atlantic Time	`UTC-04:00/DST`
UTC	UTC	`UTC+00:00`

The startTime, endTime, and untilTime are in ical:date-time format (i.e., "*yyyy-mm-ddThh:mm:ss*") in the local time representation as-entered by the user. The untilTime element is optional, and will only be present if the user entered an until time as the termination criteria for their recurring event.

The presentationTime element is for informational purposes only. Whitespace channel calculations shall be based solely on the UTC times in the eventTimes element.

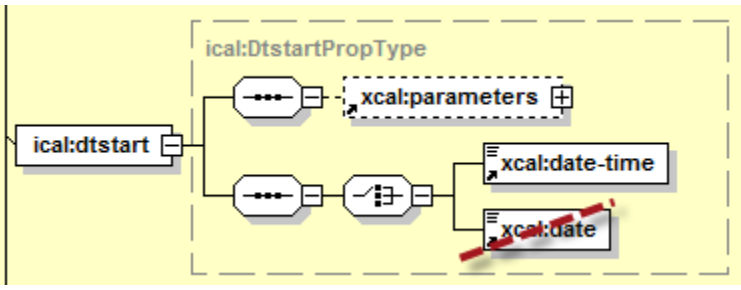

The iCalendar element type definition refers to a schema within a draft RFC. We anticipate that the final RFC will be identical in the definitions we use here, and when it is finalized we will adjust the reference. If the final version differs from the draft in a way that is significant to this specification, then this document will be modified. This document requires this specific version of the iCalendar specification. Any subsequent updates of the iCalendar specification will require this document to be updated to incorporate it.

5.10 DeviceId

Message Definition: DeviceId (wsd:DeviceId)

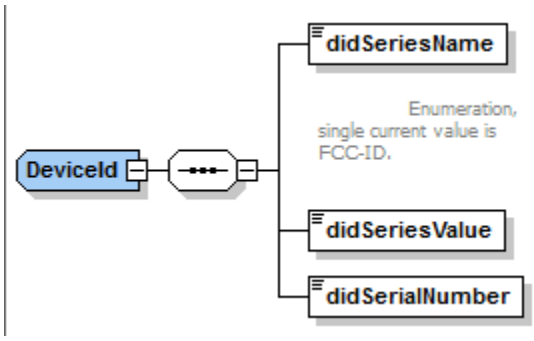


```
<DeviceId>
   <didSeriesName> DevIdSeries </didSeriesName> [1] ?
   <didSeriesValue> xsd:string </didSeriesValue> [1]
   <didSerialNumber> xsd:string </didSerialNumber> [1]
</DeviceId>
```

5.11 Radiation Center

Message Definition: RadiationCenter (wsd:RadiationCenter)

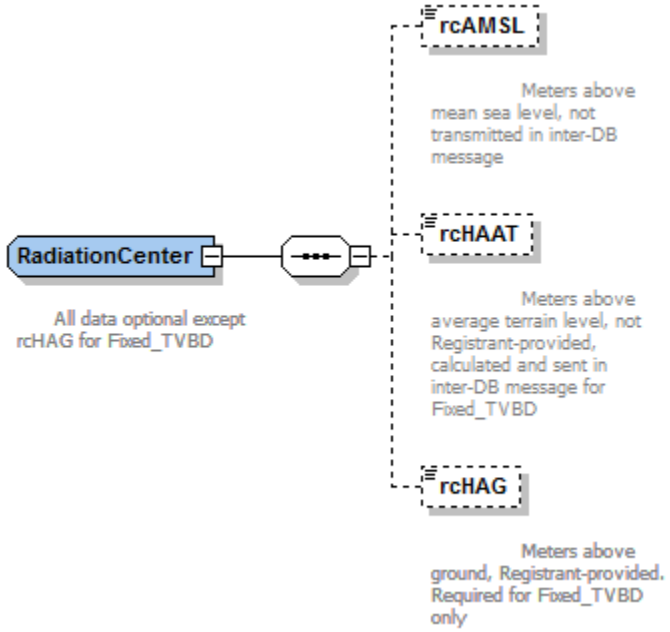


```
<RadiationCenter>
   <rcAMSL> xsd:int </rcAMSL> [0..1] ?
   <rcHAAT> xsd:int </rcHAAT> [0..1] ?
   <rcHAG> xsd:int </rcHAG> [0..1] ?
</RadiationCenter>
```

5.12 vCard

Contact information is included using an XML representation of a vCard

The vCard shall be conformant to:

http://tools.ietf.org/html/draft-ietf-vcarddav-vcardxml

representation with

http://tools.ietf.org/html/draft-ietf-vcarddav-vcardrev-19

field definitions.

The schema for the vCard is:

https://www.bedework.org/svn/bwxml/releases/bedework-3.8/schemas/vcard/vcard.xsd which is incorporated in the schema for this document.

Only Text and integer types are permitted

Of the Property Parameters listed in Section 5 of http://tools.ietf.org/html/draft-ietf-vcarddav-vcardrev-19 only VALUE is permitted

Only the following properties are permitted
KIND
FN
N
ADR
TEL
EMAIL
TZ
TITLE
ORG

The vCard element type definition refers to a schema within a draft RFC. We anticipate that the final RFC will be identical in the definitions we use here, and when it is finalized we will adjust the reference. If the final version differs from the draft in a way that is significant to this specification, then this document will be modified. This document requires this specific version of the vCard specification. Any subsequent updates of the vCard specification will require this document to be updated to incorporate it.

An example of the use of the VcardType is shown below, taken from LP-Aux_Registration. The properties array is expanded and only the first two of many elements within it are shown.

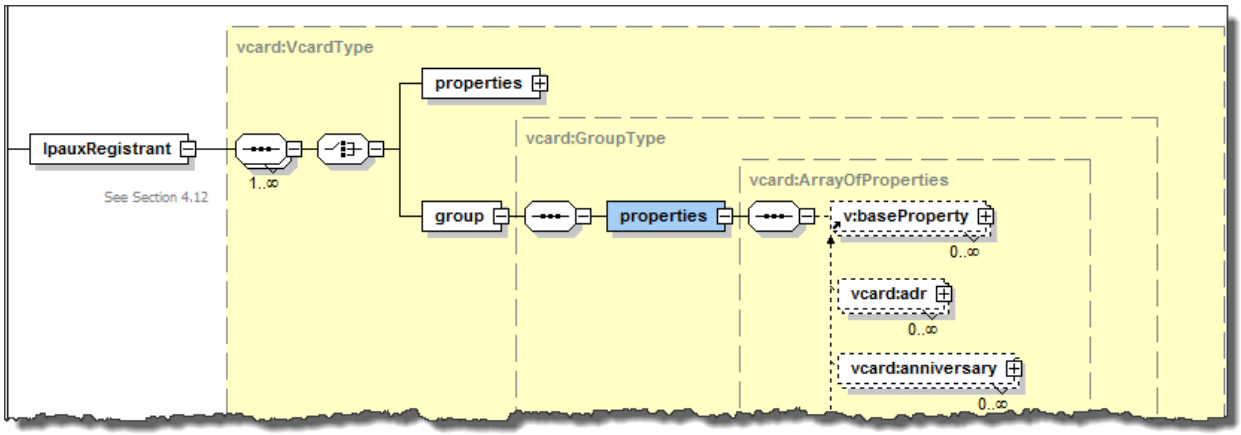

5.13 Signature Element

Signing of the RegistrationRecordEnsemble is by means of XMLDsig, using the “Enclosed” method whereby the signed information is not contained within the signature element (which would be the “Enclosing” method) but rather the signature element and the signed information are sister elements, and Xpath is used to indicate the information being signed.

The elements within the Signature are shown below.

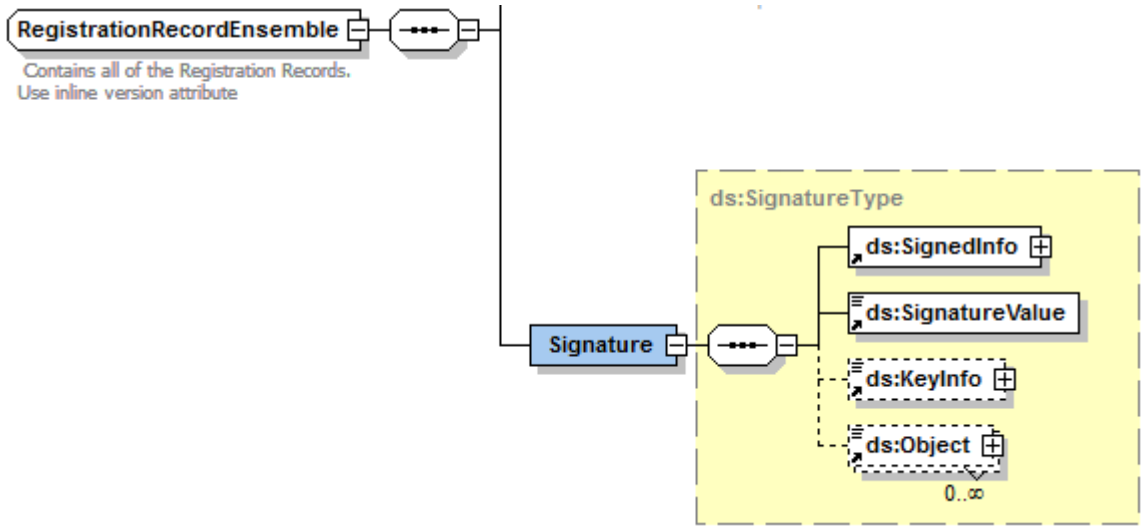

The Signature element occurs immediately after the RegistrationRecordEnsemble (in this case LP-Aux_Registration element). The SignedInfo indicates both the algorithm used for signing and the path to the information, using Xpath notation. The <XPath> element uses unix-like Xpath notation. In addition it gives the Signature Value as calculated by the sending WSDB so that the receiving WSDB can calculate a value and do a comparison.

Canonicalization shall be Canonical XML Version 1.0.

The cryptosuite shall be SHA256-RSA. The RSA key length shall be 2048 bits.

The key shall be passed "byName" using the distinguished name of the X.509 cert of the signer. Public certs shall be distributed among providers by secure email, and must be signed by a CA recognized by popular web browsers.

The schema for the Signature is

http://www.w3.org/TR/2008/REC-xmldsig-core-20080610/xmldsig-core-schema.xsd

which is incorporated in the schema for this document.

5.14 lpauxOperationalArea

The lpauxOperationalArea element is used to convey the geometry of the LP-Aux using one of two methods: Point or Quadrilateral. The Quadrilateral is a simple polygon (no intersecting sides) with sides not necessarily parallel to latitude and longitude lines. Vertices are numbered clockwise from the most Northerly point, or if two points are on a latitude line, then the most Northeasterly point.

Each Licensed LP-Aux Registration has exactly one lpauxOperationalArea. It may consist of lpauxPointArea elements or lpauxQuadrilateralArea elements but not both. These restrictions are not enforced by the XSD but must be enforced by the registration record import and export applications. The Unlicensed LP-Aux does not require an lpauxOperationalArea. The XSD does enforce the restriction that an lpauxOperationalArea may have 1-25 lpauxPointArea elements or 1-4 lpauxQuadrilateralArea elements.

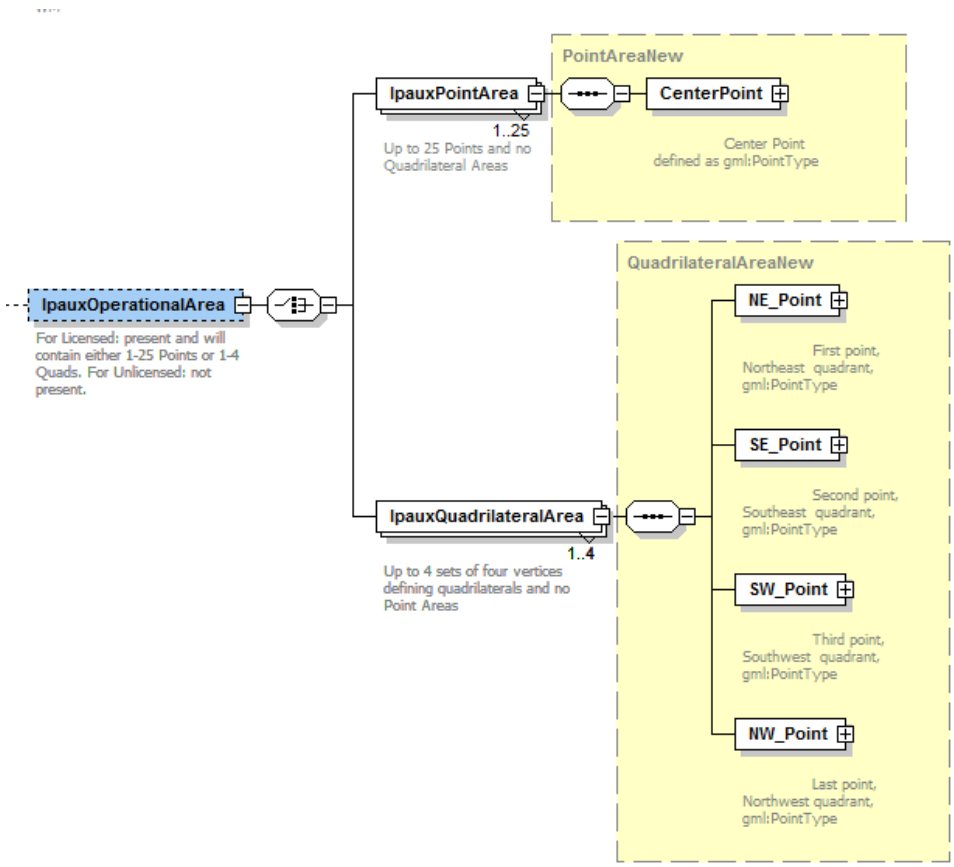


```
<lpauxOperationalArea> [0..*] ?
   Start Choice [1]
      <lpauxPointArea> PointAreaNew </lpauxPointArea> [0..25] ?
      <lpauxQuadrilateralArea> QuadrilateralAreaNew </lpauxQuadrilateralArea> [0..4]
   End Choice
</lpauxOperationalArea>
```

The lpauxOperationalArea polygons use the <gml:pos> element to specify locations. The alternative element <gml:coord> is deprecated and is explicitly NOT supported in this specification.

The lpauxOperationalArea does not use the native gml:PolygonType. Both of the LP-Aux Operational Area polygons require at least one point input, and these points are of the gml:PointType, which contains the gml:pos element. The receiving application should process only the first point in any gml:pos element, though the XSD allows gml:pos to be a sequence of multiple points.

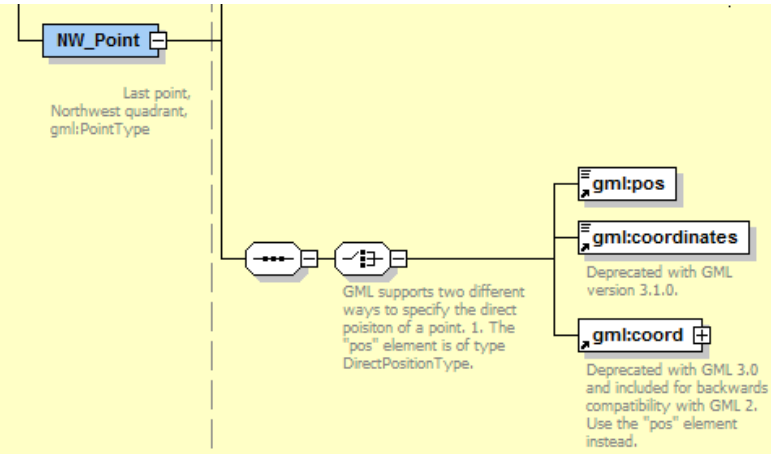

The LP-Aux XML example documents in Section 9.1 illustrate this for both geometric element types in separate examples. See Channel Calculations for White Spaces Guidelines for the specifics regarding dimensions of the elements.

5.15 RealTimePollRequest

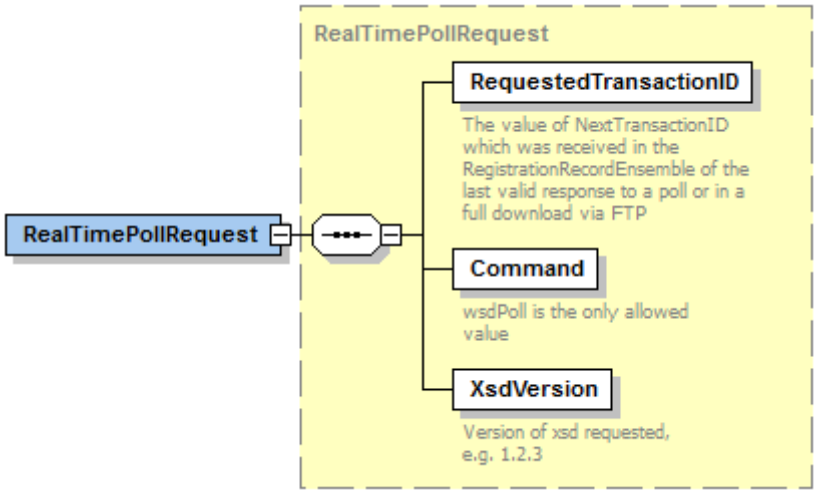


```
<RealTimePollRequest>
   <RequestedTransactionID> TransactionID </RequestedTransactionID> [1]
   <Command> ... </Command> [1] ?
   <XsdVersion> ... </XsdVersion> [1] ?
</RealTimePollRequest>
```

5.16 RealTimePollResponse

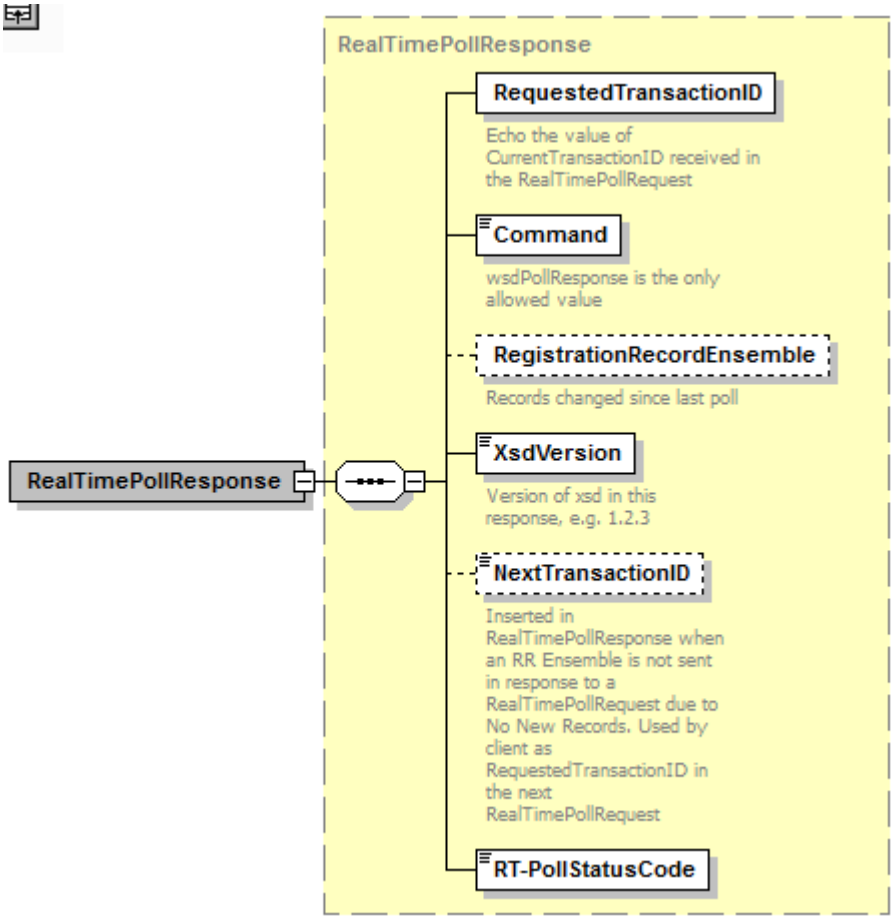


```
<RealTimePollResponse>
   <RequestedTransactionID> TransactionID </RequestedTransactionID> [1] ?
   <Command> xsd:string </Command> [1] ?
   <RegistrationRecordEnsemble> ... </RegistrationRecordEnsemble> [0..1] ?
   <XsdVersion> xsd:string </XsdVersion> [1] ?
   <NextTransactionID> xsd:string </NextTransactionID> [0..1] ?
   <RT-PollStatusCode> RT-PollResponseStatusCodeSeries </RT-PollStatusCode> [1]
</RealTimePollResponse>
```

5.17 lpauxPointArea

There will be 1-25 lpauxPointArea elements within an lpauxOperationalArea element if there are no lpauxQuadrilateralArea elements.

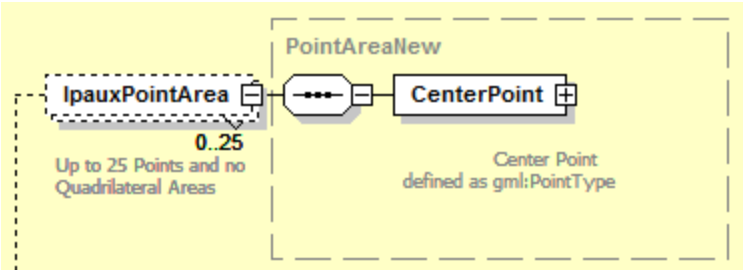


```
<PointAreaNew>
   <CenterPoint> gml:PointType </CenterPoint> [1] ?
</PointAreaNew>
```

The schema for the gml is:

http://schemas.opengis.net/gml/3.1.1/base/gml.xsd

which is incorporated in the schema for this document.

5.18 lpauxQuadrilateralArea

There will be 1-4 lpauxQuadrilateralArea elements within an lpauxOperationalArea element if there are no lpauxPointArea elements.

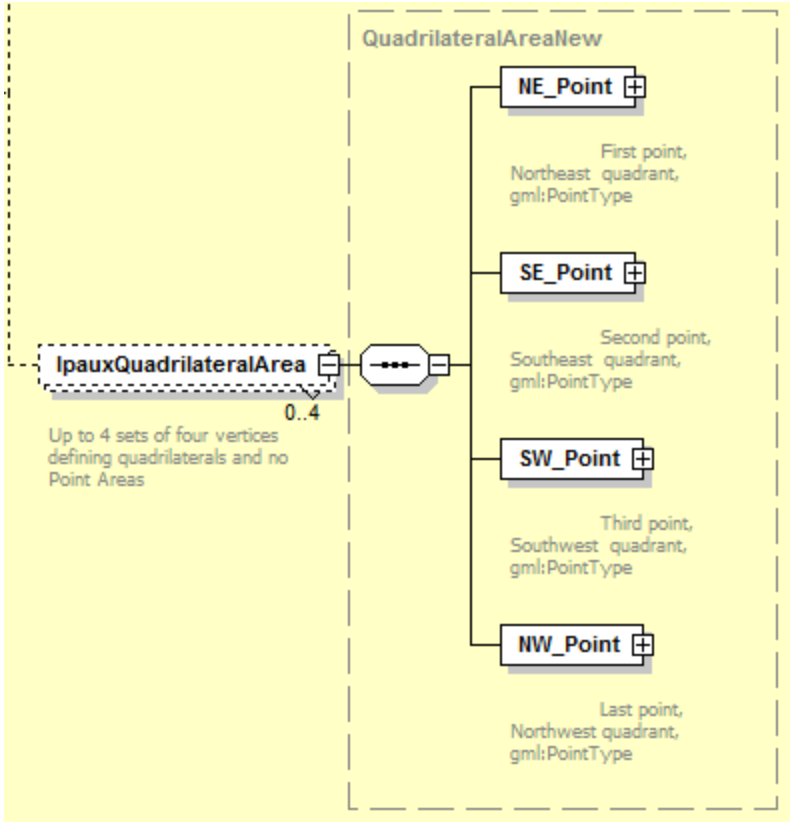


```
<QuadrilateralAreaNew>
   <NE_Point> gml:PointType </NE_Point> [1] ?
   <SE_Point> gml:PointType </SE_Point> [1] ?
   <SW_Point> gml:PointType </SW_Point> [1] ?
   <NW_Point> gml:PointType </NW_Point> [1] ?
</QuadrilateralAreaNew>
```

Quadrilateral edge length limits are in the Channel Calculation Guidelines document.

The schema for the gml is:

http://schemas.opengis.net/gml/3.1.1/base/gml.xsd

which is incorporated in the schema for this document.

6 Data Mapping Considerations

The Registered Objects themselves have structure and complexity that must be considered. For example, there is a possible (likely) many-to-one relationship between an MVPD receive site and the transmitting station(s). This can be encoded directly in the registration information by means of internal aggregates. Another approach is to normalize or “flatten” the structure by considering

each component of the internal aggregates separately and embedding them one at a time into Registration Records.

This version of the specification chooses the latter for simplicity, so that for MVPD we provide a discrete instance for each Receive Site – Transmitter Call Sign pair, as shown in the dashed box in the figure below which depicts a single MVPD site.

The "flattening" of an MVPD object is demonstrated by a series of Registration Records that are shown as being associated by a dashed box surrounding them. These all refer to a single MVPD location.

The Registration Record containing the LP-Aux Registration Object is a single Event and is shown elongated so that it can be shown containing multiple Start/Stop times. Each Start/Stop time is derived from the iCal definition of the event by means of one or more eventTimes (VEVENT) blocks to represent recurring events. All of these eventTimes are associated with the same eventChannels.

6.1 Data Completeness

All registration data would be exchanged without filtering records based on the transmitting database local logic, even if it appears to be superfluous. For example, the MVPD registration instance will be shared even if the resulting calculated contour is inscribed within or wholly contained by the contours of the TV stations transmitting to that MVPD. This is necessary to prevent unanticipated consequences of changes. For example, the parameters of the transmitting TV stations may change so that the MVPD contours are no longer wholly contained, and thus will be revealed and require protection.

7 General Whitespace Administrator Responsibilities and Error Management

7.1 Set-up and process

7.1.1 Servers and clients

WSDB Administrators shall create accounts on their systems for all other FCC-approved Administrators. Each WSDB Administrator shall be entitled to have at least 3 redundant clients accessing each server. Each WSDB administrator shall provide 1-3 redundant copies of its web service. Each WSDB Administrator must exchange the URLs of its clients and servers with each other WSDB Administrator. Changes in these URLS must be communicated a minimum of 14 days before they change. Version specific URLs may be provided. It is not necessary for a client to make use of a redundant server, if offered, but it may choose to do so.

7.1.2 HTTPS

Each client and each server shall have an X.509 certificate for use in establishing HTTPS connections. Certificates shall be emailed to other WSDB Administrators in a PKCS#7 (.p7b)

file format. Certificates shall have a two-year expiration. WSDB Administrators are required to notify all parties 14 business days prior to deploying the new certificate.

7.2 Client Test Environment

Each WSDB Administrator is required to make a Client Test Environment (CTE) available to other WSDB administrators for testing purposes. The CTE shall be a functional equivalent of a production server, but it:

a) Is not redundant, and is subject to some instability
b) May not have the same data as the production server
c) May have a software version higher than the production server.

The CTE may have different HTTPS certificates and will have a different URL.

WSDB Administrators must make new versions of its server code available on their CTE a minimum of 30 days before deployment on its production servers with the following exceptions:

a) Changes that can reasonably be expected to be invisible to clients
b) Emergency changes necessary to meet FCC obligations, serious system stability, or responding to deliberate attack.

New code versions available on the CTE must be announced 14 days in advance to all other WSDB Administrators, although slippage in schedules is recognized as a normal hazard of software development.

7.3 Error management

Clients shall retry failed file transfer or web poll operations at least 3 times, then try available alternate servers, if available, a minimum of three attempts.

If one server fails, but secondary servers work, and the failure persists for a period of a day (in the case of file transfer failures) or 5 minutes (in the case of real time failures), but alternate servers succeed, a courtesy low priority method designated by the server Adminstrator should be sent: email is suggested.

If all servers fail, the client shall notify the server Administrator by its designated high priority failure method: telephone calls are suggested, email is acceptable. All Adminstrators will share their helpdesk contact information (i.e. for example telephone number and email address) to all other Administrators to facilitate timely handling of errors and related inquires.

System maintenance/downtime is communicated to all WSDB Administrators and handled during non-critical business hours, if possible. Emergency outages are communicated immediately if downtime is longer 24 hours. It is suggested that servers have staggered maintenance so that service may be provided continuously, albeit at lower reliability, but this is NOT REQUIRED.

7.4 Releasing new versions of this document

When updates to this document are made, and approved following the procedures agreed upon among the WSDB Administrators, a method is needed to maintain interoperability of running systems while changes are introduced. Versions of this document have a 3 level version number (x.y.z). Changes that do not affect the schema have only the lowest level (z) portion of the version changed to the next sequential number. Changes that affect the schema must change either the top level (x) or mid-level (y) portion of the version, depending on the group's assessment of the extent of changes made.

When a new version that changes the schema is approved, all WSDB Administrators will need to update their software. This will take some period of time, and not all Administrators will complete their updates at the same time. The version number in the file name for FTP transfer and the version request element in the poll request for real time transfer indicate the version of the schema. Some WSDB Administrators may provide version specific URLs for the real time interface. The receiving Administrator may look for the new version (file transfer) or request a new version (real time) at any time after the specification update is approved. If the sending Administrator does not yet support the new version it will not create a file with the new version and/or will send the PollStatusCode indicating the new version is not supported. When the sending Adminstrator can support the new version, it will create files with the new version number and/or will return the new version when requested. All Administrators must support the new version within 6 months of approval or until all other administrators are supporting the new version on receipt, whichever is sooner. All Administrators must support the older version for at least 6 months following approval of the new version. After the 6 month period, all Administrators must support the new version on receipt and do not need to support the older versions on send. A version can be introduced that explicitly adopts a different introduction time (that is, more or less than 6 months).

7.5 Common Language for information disclosure

Each TV White Spaces Database Administrator interconnecting with other TV WS DB will need to make available in a consistent/persistent manner the below language to users prior to users submitting information to the applicable TV WS DBA. In addition, contact details collected from registrants needs to be limited to US based telephone and physical addresses.

> [DBA] is designated by the Federal Communications Commission of the United States of America ("FCC") to operate a database of the unlicensed television spectrum bands or "white spaces" in the United States of America ("TVWS"). In order to provide the [Services] to [YOU], [DBA] may collect certain information from [YOU] as specified herein. Furthermore, [DBA]'s TVWS database must interoperate with other FCC designated database administrators to provide the [Services] to [You]. As a result, the following information collected by [DBA] may be shared with other FCC designated TVWS database operators, the FCC and generally available to the public.
>
> Information which may be collected
>
> 1. Protected Entity Registration
>
> [LIST INFORMATION COLLECTED]

2. Fixed Base Station Registration

[LIST INFORMATION COLLECTED]

This disclosure and the information collected may change from time to time. This statement and the data will be updated to reflect the change. Changes will not apply retroactively. At this time only United States of America based telephone and addresses details can be accepted.

8 Parking Lot for V1.2

The following items are still under discussion within the group:

1. If a registrant registers data in multiple Administrators, multiple records will exist, and protection is afforded to the union of them. We may revisit this decision. This may affect the ability to modify a record originally created by another administrator.

2. There is a specific issue with unlicensed microphones where the union of registrations exceeds the allowed number of channels.

9 Appendix A - Example Records

The root node of the XML document is the RegistrationRecordEnsemble element, which contains a number of Registration elements. Each of the six examples below (Point LP-Aux, Quad LP-Aux, Unlicensed LP-Aux, Fixed TVBD, MVPD, and TBAS) is standalone and contains a RegistrationrecordEnsemble, and exactly one Registration record. This was done so that each Registration type can be validated independently against the Schema. The examples below all validate against the Schema given in Appendix B.

Subsequent to the creation of XSD_V1-2_Checkpoint_11-21-12.xsd the six examples were revised and validated again.

9.1 LP-Aux Examples

9.1.1 Licensed, Point Area


```xml
<?xml version="1.0" encoding="UTF-8"?>
<!-- edited with XMLSPY v5 rel. 4 U (http://www.xmlspy.com) by Gabor Kiss (Telcordia Flash) -->
<RegistrationRecordEnsemble xmlns:gml="http://www.opengis.net/gml" xmlns:ical="urn:ietf:params:xml:ns:icalendar-2.0"
xmlns:vcard="urn:ietf:params:xml:ns:vcard-4.0" version="1.2" xmlns:ds="http://www.w3.org/2000/09/xmldsig#"
xmlns="http://www.whitespace-db-providers.org/2011//InterDB/xsd" xmlns:xsi="http://www.w3.org/2001/XMLSchema-
instance" xsi:schemaLocation="http://www.whitespace-db-providers.org/2011//InterDB/xsd
M:\_Projects\TVWS\XMLSpy\Local_imports\wsdl\XSD_V1-2_Checkpoint_11-21-12.xsd">
    <EnsembleDescription>
        <Registrar>TELC</Registrar>
        <GenerationDate>2011-05-23T16:22:06Z</GenerationDate>
        <Scope>ALL</Scope>
        <RecordsFrom>2011-01-27T15:00:00Z</RecordsFrom>
        <RecordsTo>2011-05-23T16:22:06Z</RecordsTo>
    </EnsembleDescription>
    <Registration>
        <registrationType>LP-Aux_Registration</registrationType>
        <LP-Aux_Registration>
            <RegistrationDisposition>
                <RegistrationDate>2012-02-15T18:31:07Z</RegistrationDate>
                <RegID>120215TELC0000001</RegID>
                <Action>1</Action>
            </RegistrationDisposition>
            <lpauxRegistrant>
                <vcard:properties>
                    <vcard:org>
                        <vcard:parameters/>
                        <vcard:text/>
                    </vcard:org>
                    <vcard:fn>
                        <vcard:parameters/>
                        <vcard:text>LP-Aux Point</vcard:text>
                    </vcard:fn>
                </vcard:properties>
            </lpauxRegistrant>
            <lpauxContact>
                <vcard:properties>
                    <vcard:fn>
                        <vcard:parameters/>
                        <vcard:text>Gabor Kiss</vcard:text>
                    </vcard:fn>
```

```
            <vcard:adr>
                <vcard:parameters/>
                <vcard:street>
                    <vcard:parameters/>
                    <vcard:text>1 Telcordia Drive</vcard:text>
                </vcard:street>
                <vcard:locality>
                    <vcard:parameters/>
                    <vcard:text>Piscataway</vcard:text>
                </vcard:locality>
                <vcard:region>
                    <vcard:parameters/>
                    <vcard:text>New Jersey</vcard:text>
                </vcard:region>
                <vcard:code>
                    <vcard:parameters/>
                    <vcard:text>08854</vcard:text>
                </vcard:code>
                <vcard:country>
                    <vcard:parameters/>
                    <vcard:text>US</vcard:text>
                </vcard:country>
            </vcard:adr>
            <vcard:email>
                <vcard:parameters/>
                <vcard:text>gkiss@telcordia.com</vcard:text>
            </vcard:email>
            <vcard:tel>
                <vcard:parameters/>
                <vcard:text>7326992725</vcard:text>
            </vcard:tel>
        </vcard:properties>
    </lpauxContact>
    <lpauxVenueName/>
    <lpauxOperationalArea>
        <lpauxPointArea>
            <CenterPoint>
                <gml:pos>40.43811 -74.81086</gml:pos>
            </CenterPoint>
        </lpauxPointArea>
    </lpauxOperationalArea>
    <lpauxCallSign>WABC-TV</lpauxCallSign>
    <lpauxEvent>
        <eventTimes>
            <ical:properties>
                <ical:dtstamp>
                    <ical:parameters/>
                    <ical:utc-date-time>2012-02-15T18:31:07.000Z</ical:utc-date-time>
                </ical:dtstamp>
                <ical:dtstart>
                    <ical:parameters/>
                    <ical:date-time>2012-02-15T18:31:07.000Z</ical:date-time>
                </ical:dtstart>
                <ical:dtend>
                    <ical:parameters/>
                    <ical:date-time>2012-02-16T18:31:07.000Z</ical:date-time>
                </ical:dtend>
                <ical:rrule>
                    <ical:parameters/>
                    <ical:recur>
                        <ical:freq>DAILY</ical:freq>
                        <ical:until>
                            <ical:date-time>2012-03-11T01:30:00Z</ical:date-time>
                        </ical:until>
                    </ical:recur>
                </ical:rrule>
```

```
            <ical:uid>
                <ical:parameters/>
                <ical:text>120215TELC0000001</ical:text>
            </ical:uid>
        </ical:properties>
        <ical:components/>
    </eventTimes>
    <eventTimes>
        <ical:properties>
            <ical:dtstamp>
                <ical:parameters/>
                <ical:utc-date-time>2012-02-15T18:31:07.000Z</ical:utc-date-time>
            </ical:dtstamp>
            <ical:dtstart>
                <ical:parameters/>
                <ical:date-time>2012-03-12T00:30:00Z</ical:date-time>
            </ical:dtstart>
            <ical:dtend>
                <ical:parameters/>
                <ical:date-time>2012-03-12T02:30:00Z</ical:date-time>
            </ical:dtend>
            <ical:rrule>
                <ical:parameters/>
                <ical:recur>
                    <ical:freq>DAILY</ical:freq>
                    <ical:until>
                        <ical:date-time>2012-11-04T00:30:00Z</ical:date-time>
                    </ical:until>
                </ical:recur>
            </ical:rrule>
            <ical:uid>
                <ical:parameters/>
                <ical:text>120215TELC0000002</ical:text>
            </ical:uid>
        </ical:properties>
        <ical:components/>
    </eventTimes>
    <eventTimes>
        <ical:properties>
            <ical:dtstamp>
                <ical:parameters/>
                <ical:utc-date-time>2012-02-15T18:31:07.000Z</ical:utc-date-time>
            </ical:dtstamp>
            <ical:dtstart>
                <ical:parameters/>
                <ical:date-time>2012-11-05T01:30:00Z</ical:date-time>
            </ical:dtstart>
            <ical:dtend>
                <ical:parameters/>
                <ical:date-time>2012-11-05T03:30:00Z</ical:date-time>
            </ical:dtend>
            <ical:rrule>
                <ical:parameters/>
                <ical:recur>
                    <ical:freq>DAILY</ical:freq>
                    <ical:until>
                        <ical:date-time>2013-01-01T01:30:00Z</ical:date-time>
                    </ical:until>
                </ical:recur>
            </ical:rrule>
            <ical:uid>
                <ical:parameters/>
                <ical:text>120215TELC0000003</ical:text>
            </ical:uid>
        </ical:properties>
        <ical:components/>
```

```
                </eventTimes>
                <eventChannel>
                    <chanNum>11</chanNum>
                </eventChannel>
                <presentationTime>
                    <tzName>UTC-05:00/DST</tzName>
                    <startTime>2012-03-01T20:30:00</startTime>
                    <endTime>2012-03-01T22:30:00</endTime>
                    <untilTime>2013-01-01T00:00:00</untilTime>
                </presentationTime>
            </lpauxEvent>
            <Licensed>1</Licensed>
        </LP-Aux_Registration>
    </Registration>
    <NextTransactionID>"abcd12345"</NextTransactionID>
    <Signature xmlns="http://www.w3.org/2000/09/xmldsig#">
        <SignedInfo>
            <CanonicalizationMethod Algorithm="http://www.an_algorithm@somedamnplace.org"/>
            <SignatureMethod Algorithm="http://www.another_algorithm@somedamnplace.org"/>
            <Reference>
                <DigestMethod Algorithm="http://www.yet_another_algorithm@somedamnplace.org"/>
                <DigestValue/>
            </Reference>
        </SignedInfo>
        <SignatureValue>1243lkjasdf90871243</SignatureValue>
    </Signature>
</RegistrationRecordEnsemble>
```


9.1.2 Licensed, Quad Area


```
<?xml version="1.0" encoding="UTF-8"?>
<!-- edited with XMLSPY v5 rel. 4 U (http://www.xmlspy.com) by Gabor Kiss (Telcordia Flash) -->
<RegistrationRecordEnsemble xmlns:gml="http://www.opengis.net/gml" xmlns:ical="urn:ietf:params:xml:ns:icalendar-2.0"
xmlns:vcard="urn:ietf:params:xml:ns:vcard-4.0" version="1.2" xmlns:ds="http://www.w3.org/2000/09/xmldsig#"
xmlns="http://www.whitespace-db-providers.org/2011//InterDB/xsd" xmlns:xsi="http://www.w3.org/2001/XMLSchema-
instance" xsi:schemaLocation="http://www.whitespace-db-providers.org/2011//InterDB/xsd
M:\_Projects\TVWS\XMLSpy\Local_imports\wsdl\XSD_V1-2_Checkpoint_11-21-12.xsd">
    <EnsembleDescription>
        <Registrar>TELC</Registrar>
        <GenerationDate>2011-05-23T16:22:06Z</GenerationDate>
        <Scope>ALL</Scope>
        <RecordsFrom>2011-01-27T15:00:00Z</RecordsFrom>
        <RecordsTo>2011-05-23T16:22:06Z</RecordsTo>
    </EnsembleDescription>
    <Registration>
        <registrationType>LP-Aux_Registration</registrationType>
        <LP-Aux_Registration>
            <RegistrationDisposition>
                <RegistrationDate>2011-12-15T19:18:51Z</RegistrationDate>
                <RegID>111215TELC00001</RegID>
                <Action>1</Action>
            </RegistrationDisposition>
            <lpauxRegistrant>
                <vcard:properties>
                    <vcard:org>
                        <vcard:parameters/>
                        <vcard:text>Telcordia Technologies</vcard:text>
                    </vcard:org>
                    <vcard:fn>
                        <vcard:parameters/>
                        <vcard:text>LP-Aux Quad</vcard:text>
                    </vcard:fn>
                </vcard:properties>
```

```
</lpauxRegistrant>
<lpauxContact>
    <vcard:properties>
        <vcard:fn>
            <vcard:parameters/>
            <vcard:text/>
        </vcard:fn>
        <vcard:adr>
            <vcard:parameters/>
            <vcard:street>
                <vcard:parameters/>
                <vcard:text>gkiss@telcordia.com</vcard:text>
            </vcard:street>
            <vcard:locality>
                <vcard:parameters/>
                <vcard:text>Piscataway</vcard:text>
            </vcard:locality>
            <vcard:region>
                <vcard:parameters/>
                <vcard:text>NJ</vcard:text>
            </vcard:region>
            <vcard:code>
                <vcard:parameters/>
                <vcard:text>08854</vcard:text>
            </vcard:code>
            <vcard:country>
                <vcard:parameters/>
                <vcard:text>US</vcard:text>
            </vcard:country>
        </vcard:adr>
        <vcard:email>
            <vcard:parameters/>
            <vcard:text/>
        </vcard:email>
        <vcard:tel>
            <vcard:parameters/>
            <vcard:text/>
        </vcard:tel>
    </vcard:properties>
</lpauxContact>
<lpauxVenueName/>
<lpauxOperationalArea>
    <lpauxQuadrilateralArea>
        <NE_Point>
            <gml:pos>40.54500 -74.46842</gml:pos>
        </NE_Point>
        <SE_Point>
            <gml:pos>40.53500 -74.46842</gml:pos>
        </SE_Point>
        <SW_Point>
            <gml:pos>40.53500 -74.48158</gml:pos>
        </SW_Point>
        <NW_Point>
            <gml:pos>40.54500 -74.48158</gml:pos>
        </NW_Point>
    </lpauxQuadrilateralArea>
</lpauxOperationalArea>
<lpauxCallSign>WABC-TV</lpauxCallSign>
<lpauxEvent>
    <eventTimes>
        <ical:properties>
            <ical:dtstamp>
                <ical:parameters/>
                <ical:utc-date-time>2011-12-15T19:18:51.000Z</ical:utc-date-time>
            </ical:dtstamp>
            <ical:dtstart>
```

```
                        <ical:parameters/>
                        <ical:date-time>2012-02-02T22:30:00Z</ical:date-time>
                    </ical:dtstart>
                    <ical:dtend>
                        <ical:parameters/>
                        <ical:date-time>2012-02-02T23:00:00Z</ical:date-time>
                    </ical:dtend>
                    <ical:uid>
                        <ical:parameters/>
                        <ical:text>111215TELC00001</ical:text>
                    </ical:uid>
                </ical:properties>
                <ical:components/>
            </eventTimes>
            <eventChannel>
                <chanNum>13</chanNum>
            </eventChannel>
            <presentationTime>
                <tzName>UTC-07:00</tzName>
                <startTime>2012-02-02T15:30:00</startTime>
                <endTime>2012-02-02T16:30:00</endTime>
            </presentationTime>
        </lpauxEvent>
        <Licensed>1</Licensed>
    </LP-Aux_Registration>
</Registration>
<NextTransactionID>"abcd12345"</NextTransactionID>
<Signature xmlns="http://www.w3.org/2000/09/xmldsig#">
    <SignedInfo>
        <CanonicalizationMethod Algorithm="http://www.an_algorithm@somedamnplace.org"/>
        <SignatureMethod Algorithm="http://www.another_algorithm@somedamnplace.org"/>
        <Reference>
            <DigestMethod Algorithm="http://www.yet_another_algorithm@somedamnplace.org"/>
            <DigestValue/>
        </Reference>
    </SignedInfo>
    <SignatureValue>1243lkjasdf90871243</SignatureValue>
</Signature>
</RegistrationRecordEnsemble>
```


9.1.3 Unlicensed LP-Aux


```
<?xml version="1.0" encoding="UTF-8"?>
<!-- edited with XMLSPY v5 rel. 4 U (http://www.xmlspy.com) by Gabor Kiss (Telcordia Flash) -->
<RegistrationRecordEnsemble xmlns:gml="http://www.opengis.net/gml" xmlns:ical="urn:ietf:params:xml:ns:icalendar-2.0"
xmlns:vcard="urn:ietf:params:xml:ns:vcard-4.0" version="1.2" xmlns:ds="http://www.w3.org/2000/09/xmldsig#"
xmlns="http://www.whitespace-db-providers.org/2011//InterDB/xsd" xmlns:xsi="http://www.w3.org/2001/XMLSchema-
instance" xsi:schemaLocation="http://www.whitespace-db-providers.org/2011//InterDB/xsd
 M:\_Projects\TVWS\XMLSpy\Local_imports\wsdl\XSD_V1-2_Checkpoint_11-21-12.xsd">
    <EnsembleDescription>
        <Registrar>TELC</Registrar>
        <GenerationDate>2011-05-23T16:22:06Z</GenerationDate>
        <Scope>ALL</Scope>
        <RecordsFrom>2011-01-27T15:00:00Z</RecordsFrom>
        <RecordsTo>2011-05-23T16:22:06Z</RecordsTo>
    </EnsembleDescription>
    <Registration>
        <registrationType>LP-Aux_Registration</registrationType>
        <LP-Aux_Registration>
            <RegistrationDisposition>
                <RegistrationDate>2011-12-11T00:31:22Z</RegistrationDate>
                <RegID>111211TELC0000003</RegID>
                <Action>1</Action>
            </RegistrationDisposition>
```

```
<lpauxRegistrant>
    <vcard:properties>
        <vcard:org>
            <vcard:parameters/>
            <vcard:text>Telcordia</vcard:text>
        </vcard:org>
        <vcard:fn>
            <vcard:parameters/>
            <vcard:text>LP-Aux Unlicensed</vcard:text>
        </vcard:fn>
    </vcard:properties>
</lpauxRegistrant>
<lpauxContact>
    <vcard:properties>
        <vcard:fn>
            <vcard:parameters/>
            <vcard:text>None</vcard:text>
        </vcard:fn>
        <vcard:adr>
            <vcard:parameters/>
            <vcard:street>
                <vcard:parameters/>
                <vcard:text/>
            </vcard:street>
            <vcard:locality>
                <vcard:parameters/>
                <vcard:text>Piscataway</vcard:text>
            </vcard:locality>
            <vcard:region>
                <vcard:parameters/>
                <vcard:text>NJ</vcard:text>
            </vcard:region>
            <vcard:code>
                <vcard:parameters/>
                <vcard:text/>
            </vcard:code>
            <vcard:country>
                <vcard:parameters/>
                <vcard:text>US</vcard:text>
            </vcard:country>
        </vcard:adr>
        <vcard:email>
            <vcard:parameters/>
            <vcard:text>None</vcard:text>
        </vcard:email>
        <vcard:tel>
            <vcard:parameters/>
            <vcard:text>None</vcard:text>
        </vcard:tel>
    </vcard:properties>
</lpauxContact>
<lpauxVenueName>Madison Square Garden</lpauxVenueName>
<lpauxCallSign>CallsignEquiv</lpauxCallSign>
<lpauxEvent>
    <eventTimes>
        <ical:properties>
            <ical:dtstamp>
                <ical:parameters/>
                <ical:utc-date-time>2011-12-11T00:31:22.000Z</ical:utc-date-time>
            </ical:dtstamp>
            <ical:dtstart>
                <ical:parameters/>
                <ical:date-time>2011-12-11T00:00:00Z</ical:date-time>
            </ical:dtstart>
            <ical:dtend>
                <ical:parameters/>
```

```
                        <ical:date-time>2012-12-11T00:00:00Z</ical:date-time>
                    </ical:dtend>
                    <ical:uid>
                        <ical:parameters/>
                        <ical:text>111211TELC0000003</ical:text>
                    </ical:uid>
                </ical:properties>
                <ical:components/>
            </eventTimes>
            <eventChannel>
                <chanNum>14</chanNum>
            </eventChannel>
            <eventChannel>
                <chanNum>21</chanNum>
            </eventChannel>
            <presentationTime>
                <tzName>UTC+00:00</tzName>
                <startTime>2011-12-11T00:00:00</startTime>
                <endTime>2012-12-11T00:00:00</endTime>
            </presentationTime>
        </lpauxEvent>
        <Licensed>0</Licensed>
    </LP-Aux_Registration>
</Registration>
<NextTransactionID>"abcd12345"</NextTransactionID>
<Signature xmlns="http://www.w3.org/2000/09/xmldsig#">
    <SignedInfo>
        <CanonicalizationMethod Algorithm="http://www.an_algorithm@somedamnplace.org"/>
        <SignatureMethod Algorithm="http://www.another_algorithm@somedamnplace.org"/>
        <Reference>
            <DigestMethod Algorithm="http://www.yet_another_algorithm@somedamnplace.org"/>
            <DigestValue/>
        </Reference>
    </SignedInfo>
    <SignatureValue>1243lkjasdf90871243</SignatureValue>
</Signature>
</RegistrationRecordEnsemble>
```


9.2 Fixed TVBD Example


```
<?xml version="1.0" encoding="UTF-8"?>
<!-- edited with XMLSPY v5 rel. 4 U (http://www.xmlspy.com) by Gabor Kiss (Telcordia Flash) -->
<RegistrationRecordEnsemble xmlns:gml="http://www.opengis.net/gml" xmlns:ical="urn:ietf:params:xml:ns:icalendar-2.0"
xmlns:vcard="urn:ietf:params:xml:ns:vcard-4.0" version="1.2" xmlns:ds="http://www.w3.org/2000/09/xmldsig#"
xmlns="http://www.whitespace-db-providers.org/2011//InterDB/xsd" xmlns:xsi="http://www.w3.org/2001/XMLSchema-
instance" xsi:schemaLocation="http://www.whitespace-db-providers.org/2011//InterDB/xsd
M:\_Projects\TVWS\XMLSpy\Local_imports\wsdl\XSD_V1-2_Checkpoint_11-21-12.xsd">
    <EnsembleDescription>
        <Registrar>TELC</Registrar>
        <GenerationDate>2011-05-23T16:22:06Z</GenerationDate>
        <Scope>ALL</Scope>
        <RecordsFrom>2011-01-27T15:00:00Z</RecordsFrom>
        <RecordsTo>2011-05-23T16:22:06Z</RecordsTo>
    </EnsembleDescription>
    <Registration>
        <registrationType>Fixed_TVBD_Registration</registrationType>
        <Fixed_TVBD_Registration>
            <RegistrationDisposition>
                <RegistrationDate>2012-01-26T20:23:04Z</RegistrationDate>
                <RegID>120126TELC00003</RegID>
                <Action>1</Action>
            </RegistrationDisposition>
```

```
    <tvbdRegistrant>
        <vcard:properties>
            <vcard:org>
                <vcard:parameters/>
                <vcard:text>TELC</vcard:text>
            </vcard:org>
            <vcard:fn>
                <vcard:parameters/>
                <vcard:text>Fixed TVBD</vcard:text>
            </vcard:fn>
        </vcard:properties>
    </tvbdRegistrant>
    <tvbdContact>
        <vcard:properties>
            <vcard:fn>
                <vcard:parameters/>
                <vcard:text>John 9 Public</vcard:text>
            </vcard:fn>
            <vcard:adr>
                <vcard:parameters/>
                <vcard:street>
                    <vcard:parameters/>
                    <vcard:text>123 Main Street</vcard:text>
                </vcard:street>
                <vcard:locality>
                    <vcard:parameters/>
                    <vcard:text>Anytown</vcard:text>
                </vcard:locality>
                <vcard:region>
                    <vcard:parameters/>
                    <vcard:text>CA</vcard:text>
                </vcard:region>
                <vcard:code>
                    <vcard:parameters/>
                    <vcard:text>90210</vcard:text>
                </vcard:code>
                <vcard:country>
                    <vcard:parameters/>
                    <vcard:text>US</vcard:text>
                </vcard:country>
            </vcard:adr>
            <vcard:email>
                <vcard:parameters/>
                <vcard:text/>
            </vcard:email>
            <vcard:tel>
                <vcard:parameters/>
                <vcard:text/>
            </vcard:tel>
        </vcard:properties>
    </tvbdContact>
    <tvbdRegLocation>
        <locLatitude>28.76702</locLatitude>
        <locLongitude>-81.35849</locLongitude>
        <locDatum>NAD-83</locDatum>
        <locRadiationCenter>
            <rcHAAT>5.856</rcHAAT>
            <rcHAG>5.0</rcHAG>
        </locRadiationCenter>
    </tvbdRegLocation>
    <tvbdRegDeviceId>
        <didSeriesName>FCC-ID</didSeriesName>
        <didSeriesValue>OPS1</didSeriesValue>
        <didSerialNumber>SN-1234</didSerialNumber>
    </tvbdRegDeviceId>
</Fixed_TVBD_Registration>
```

```
    </Registration>
    <NextTransactionID>"abcd12345"</NextTransactionID>
    <Signature xmlns="http://www.w3.org/2000/09/xmldsig#">
        <SignedInfo>
            <CanonicalizationMethod Algorithm="http://www.an_algorithm@somedamnplace.org"/>
            <SignatureMethod Algorithm="http://www.another_algorithm@somedamnplace.org"/>
            <Reference>
                <DigestMethod Algorithm="http://www.yet_another_algorithm@somedamnplace.org"/>
                <DigestValue/>
            </Reference>
        </SignedInfo>
        <SignatureValue>1243lkjasdf90871243</SignatureValue>
    </Signature>
</RegistrationRecordEnsemble>
```


9.3 MVPD Example


```
<?xml version="1.0" encoding="UTF-8"?>
<!-- edited with XMLSPY v5 rel. 4 U (http://www.xmlspy.com) by Gabor Kiss (Telcordia Flash) -->
<RegistrationRecordEnsemble xmlns:gml="http://www.opengis.net/gml" xmlns:ical="urn:ietf:params:xml:ns:icalendar-2.0"
xmlns:vcard="urn:ietf:params:xml:ns:vcard-4.0" version="1.2" xmlns:ds="http://www.w3.org/2000/09/xmldsig#"
xmlns="http://www.whitespace-db-providers.org/2011//InterDB/xsd" xmlns:xsi="http://www.w3.org/2001/XMLSchema-
instance" xsi:schemaLocation="http://www.whitespace-db-providers.org/2011//InterDB/xsd
M:\_Projects\TVWS\XMLSpy\Local_imports\wsdl\XSD_V1-2_Checkpoint_11-21-12.xsd">
    <EnsembleDescription>
        <Registrar>TELC</Registrar>
        <GenerationDate>2011-05-23T16:22:06Z</GenerationDate>
        <Scope>ALL</Scope>
        <RecordsFrom>2011-01-27T15:00:00Z</RecordsFrom>
        <RecordsTo>2011-05-23T16:22:06Z</RecordsTo>
    </EnsembleDescription>
    <Registration>
        <registrationType>MVPD_Registration</registrationType>
        <MVPD_Registration>
            <RegistrationDisposition>
                <RegistrationDate>2012-02-15T18:31:54Z</RegistrationDate>
                <RegID>120215TELC0000002</RegID>
                <Action>1</Action>
            </RegistrationDisposition>
            <mvpdRegistrant>
                <vcard:properties>
                    <vcard:org>
                        <vcard:parameters/>
                        <vcard:text/>
                    </vcard:org>
                    <vcard:fn>
                        <vcard:parameters/>
                        <vcard:text>MVPD</vcard:text>
                    </vcard:fn>
                </vcard:properties>
            </mvpdRegistrant>
            <mvpdContact>
                <vcard:properties>
                    <vcard:fn>
                        <vcard:parameters/>
                        <vcard:text>Gabor Kiss</vcard:text>
                    </vcard:fn>
                    <vcard:adr>
                        <vcard:parameters/>
                        <vcard:street>
                            <vcard:parameters/>
                            <vcard:text>1 Telcordia Drive</vcard:text>
                        </vcard:street>
```

```
                    <vcard:locality>
                        <vcard:parameters/>
                        <vcard:text>Piscataway</vcard:text>
                    </vcard:locality>
                    <vcard:region>
                        <vcard:parameters/>
                        <vcard:text>New Jersey</vcard:text>
                    </vcard:region>
                    <vcard:code>
                        <vcard:parameters/>
                        <vcard:text>08854</vcard:text>
                    </vcard:code>
                    <vcard:country>
                        <vcard:parameters/>
                        <vcard:text>US</vcard:text>
                    </vcard:country>
                </vcard:adr>
                <vcard:email>
                    <vcard:parameters/>
                    <vcard:text>gkiss@telcordia.com</vcard:text>
                </vcard:email>
                <vcard:tel>
                    <vcard:parameters/>
                    <vcard:text>7326992725</vcard:text>
                </vcard:tel>
            </vcard:properties>
        </mvpdContact>
        <mvpdLocation>
            <locLatitude>40.651</locLatitude>
            <locLongitude>-75.68428</locLongitude>
            <locDatum>NAD-83</locDatum>
            <locRadiationCenter/>
        </mvpdLocation>
        <mvpdChannel>
            <ustChannel>7</ustChannel>
            <ustCallSign>WABC-TV</ustCallSign>
        </mvpdChannel>
        <mvpdXmiterLocation>
            <locLatitude>40.7484350639</locLatitude>
            <locLongitude>-73.9856945973</locLongitude>
            <locDatum>NAD-83</locDatum>
            <locRadiationCenter/>
        </mvpdXmiterLocation>
    </MVPD_Registration>
</Registration>
<NextTransactionID>"abcd12345"</NextTransactionID>
<Signature xmlns="http://www.w3.org/2000/09/xmldsig#">
    <SignedInfo>
        <CanonicalizationMethod Algorithm="http://www.an_algorithm@somedamnplace.org"/>
        <SignatureMethod Algorithm="http://www.another_algorithm@somedamnplace.org"/>
        <Reference>
            <DigestMethod Algorithm="http://www.yet_another_algorithm@somedamnplace.org"/>
            <DigestValue/>
        </Reference>
    </SignedInfo>
    <SignatureValue>1243lkjasdf90871243</SignatureValue>
</Signature>
</RegistrationRecordEnsemble>
```


9.4 TV Receive Site Example

Deleted

9.5 Temp BAS Link Example


```xml
<?xml version="1.0" encoding="UTF-8"?>
<!-- edited with XMLSPY v5 rel. 4 U (http://www.xmlspy.com) by Gabor Kiss (Telcordia Flash) -->
<RegistrationRecordEnsemble xmlns:gml="http://www.opengis.net/gml" xmlns:ical="urn:ietf:params:xml:ns:icalendar-2.0"
xmlns:vcard="urn:ietf:params:xml:ns:vcard-4.0" version="1.2" xmlns:ds="http://www.w3.org/2000/09/xmldsig#"
xmlns="http://www.whitespace-db-providers.org/2011//InterDB/xsd" xmlns:xsi="http://www.w3.org/2001/XMLSchema-
instance" xsi:schemaLocation="http://www.whitespace-db-providers.org/2011//InterDB/xsd
M:\_Projects\TVWS\XMLSpy\Local_imports\wsdl\XSD_V1-2_Checkpoint_11-21-12.xsd">
    <EnsembleDescription>
        <Registrar>TELC</Registrar>
        <GenerationDate>2011-05-23T16:22:06Z</GenerationDate>
        <Scope>ALL</Scope>
        <RecordsFrom>2011-01-27T15:00:00Z</RecordsFrom>
        <RecordsTo>2011-05-23T16:22:06Z</RecordsTo>
    </EnsembleDescription>
    <Registration>
        <registrationType>Temp_BAS_Registration</registrationType>
        <Temp_BAS_Registration>
            <RegistrationDisposition>
                <RegistrationDate>2012-02-15T18:33:10Z</RegistrationDate>
                <RegID>120215TELC0000003</RegID>
                <Action>1</Action>
            </RegistrationDisposition>
            <tbasRegistrant>
                <vcard:properties>
                    <vcard:org>
                        <vcard:parameters/>
                        <vcard:text/>
                    </vcard:org>
                    <vcard:fn>
                        <vcard:parameters/>
                        <vcard:text>TBAS</vcard:text>
                    </vcard:fn>
                </vcard:properties>
            </tbasRegistrant>
            <tbasContact>
                <vcard:properties>
                    <vcard:fn>
                        <vcard:parameters/>
                        <vcard:text>Gabor Kiss</vcard:text>
                    </vcard:fn>
                    <vcard:adr>
                        <vcard:parameters/>
                        <vcard:street>
                            <vcard:parameters/>
                            <vcard:text>1 Telcordia Drive</vcard:text>
                        </vcard:street>
                        <vcard:locality>
                            <vcard:parameters/>
                            <vcard:text>Piscataway</vcard:text>
                        </vcard:locality>
                        <vcard:region>
                            <vcard:parameters/>
                            <vcard:text>New Jersey</vcard:text>
                        </vcard:region>
                        <vcard:code>
                            <vcard:parameters/>
                            <vcard:text>08854</vcard:text>
                        </vcard:code>
                        <vcard:country>
                            <vcard:parameters/>
```

```
                    <vcard:text>US</vcard:text>
                </vcard:country>
            </vcard:adr>
            <vcard:email>
                <vcard:parameters/>
                <vcard:text>gkiss@telcordia.com</vcard:text>
            </vcard:email>
            <vcard:tel>
                <vcard:parameters/>
                <vcard:text>7326992725</vcard:text>
            </vcard:tel>
        </vcard:properties>
    </tbasContact>
    <tbasRecvLocation>
        <locLatitude>40.26648</locLatitude>
        <locLongitude>-74.97566</locLongitude>
        <locDatum>NAD-83</locDatum>
        <locRadiationCenter/>
    </tbasRecvLocation>
    <tbasChannel>
        <ustCallSign>WABC-TV</ustCallSign>
    </tbasChannel>
    <tbasXmitLocation>
        <locLatitude>40.27486</locLatitude>
        <locLongitude>-74.75044</locLongitude>
        <locDatum>NAD-83</locDatum>
        <locRadiationCenter/>
    </tbasXmitLocation>
    <tbasEvent>
        <eventTimes>
            <ical:properties>
                <ical:dtstamp>
                    <ical:parameters/>
                    <ical:utc-date-time>2012-02-15T18:33:10.00Z</ical:utc-date-time>
                </ical:dtstamp>
                <ical:dtstart>
                    <ical:parameters/>
                    <ical:date-time>2012-02-15T13:35:00Z</ical:date-time>
                </ical:dtstart>
                <ical:dtend>
                    <ical:parameters/>
                    <ical:date-time>2012-02-25T13:35:00Z</ical:date-time>
                </ical:dtend>
                <ical:uid>
                    <ical:parameters/>
                    <ical:text>120215TELC0000003</ical:text>
                </ical:uid>
            </ical:properties>
            <ical:components/>
        </eventTimes>
        <eventChannel>
            <chanNum>27</chanNum>
        </eventChannel>
        <presentationTime>
            <tzName>UTC-05:00/DST</tzName>
            <startTime>2012-02-15T08:35:00</startTime>
            <endTime>2012-02-25T08:35:00</endTime>
        </presentationTime>
    </tbasEvent>
  </Temp_BAS_Registration>
</Registration>
<NextTransactionID>"abcd12345"</NextTransactionID>
<Signature xmlns="http://www.w3.org/2000/09/xmldsig#">
  <SignedInfo>
    <CanonicalizationMethod Algorithm="http://www.an_algorithm@somedamnplace.org"/>
    <SignatureMethod Algorithm="http://www.another_algorithm@somedamnplace.org"/>
```

```
            <Reference>
                <DigestMethod Algorithm="http://www.yet_another_algorithm@somedamnplace.org"/>
                <DigestValue/>
            </Reference>
        </SignedInfo>
        <SignatureValue>1243lkjasdf90871243</SignatureValue>
    </Signature>
</RegistrationRecordEnsemble>
```

10 Appendix B - XML Schema

Important note: Where there are any conflicts, documentation in the xsd is informative. The normative text is the body of this specification. This Appendix contains the XSD definition found in XSD_V1-2_Checkpoint_11-21-12.xsd

In order to improve performance and minimize the risk of changes beyond our control which may impact the XSD, the recommendation is to use local copies of referenced schemas. These should be obtained as follows.

gml.xsd: version "3.1.1"
- Download XSD files from http://schemas.opengis.net/gml/3.1.1/*
- From the resulting directory, reference:
  gml/3.1.1/base/gml.xsd

xlink:
- From http://www.w3.org/1999/ download xlink.xsd

icalendar 2.0: version 3.8 of Bedework
- Download from https://www.bedework.org/svn/bwxml/releases/bedework-3.8/schemas/icalendar/*
- From the resulting directory, reference:
  iCalendar.xsd

vcard 4.0: version 3.8 of Bedework
- Download from https://www.bedework.org/svn/bwxml/releases/bedework-3.8/schemas/vcard/*
- From the resulting directory, reference:
  vcard.xsd

xmldsig
- Download from http://www.w3.org/TR/2008/REC-xmldsig-core-20080610/xmldsig-core-schema.xsd
  xmldsig.xsd

xml.xsd:
- From http://www.w3.org/2001 download xml.xsd

```
<?xml version="1.0"?>
<!-- edited with XMLSPY v5 rel. 4 U (http://www.xmlspy.com) by Gabor Kiss (Telcordia Flash) -->
<!-- last edited 11/21/12 for Interop Spec V1.2 - Gabor Kiss -->
<!-- Generated by Telcordia STRIDE SchemaGen: 1.9 -->
<!-- Copyright (c) 2011 Telcordia Technologies, Inc.  All rights reserved. -->
<!-- Schema Identifier: Default ID (Fri May 20 16:54:06 EDT 2011) -->
<!-- XSD_PATH_NAME: InterDB/xsd -->
<xsd:schema targetNamespace="http://www.whitespace-db-providers.org/2011//InterDB/xsd"
xmlns:ical="urn:ietf:params:xml:ns:icalendar-2.0" xmlns:vcard="urn:ietf:params:xml:ns:vcard-4.0"
```

```
xmlns="http://www.whitespace-db-providers.org/2011//InterDB/xsd" xmlns:xsd="http://www.w3.org/2001/XMLSchema"
xmlns:ds="http://www.w3.org/2000/09/xmldsig#" xmlns:gml="http://www.opengis.net/gml" elementFormDefault="qualified">
    <xsd:import namespace="urn:ietf:params:xml:ns:vcard-4.0" schemaLocation="vcard/vcard.xsd"/>
    <!--xsd:import namespace="urn:ietf:params:xml:ns:vcard-4.0"
schemaLocation="https://www.bedework.org/svn/bwxml/trunk/schemas/vcard/vcard.xsd"/-->
    <!--xsd:import namespace="urn:ietf:params:xml:ns:vcard-4.0"
schemaLocation="https://www.bedework.org/svn/bwxml/releases/bedework-3.8/schemas/vcard/vcard.xsd"/-->
    <!-- This import brings in the vCard Schema-->
    <xsd:import namespace="urn:ietf:params:xml:ns:icalendar-2.0" schemaLocation="icalendar/iCalendar.xsd"/>
    <!--xsd:import namespace="urn:ietf:params:xml:ns:icalendar-2.0"
schemaLocation="https://www.bedework.org/svn/bwxml/trunk/schemas/icalendar/iCalendar.xsd"/-->
    <!--xsd:import namespace="urn:ietf:params:xml:ns:icalendar-2.0"
schemaLocation="https://www.bedework.org/svn/bwxml/releases/bedework-3.8/schemas/icalendar/iCalendar.xsd"/-->
    <!-- This import brings in the iCalendar Schema-->
    <xsd:import namespace="http://www.w3.org/2000/09/xmldsig#" schemaLocation="xmldsig/xmldsig-core-schema.xsd"/>
    <!--xsd:import namespace="http://www.w3.org/2000/09/xmldsig#" schemaLocation="http://www.w3.org/TR/2008/REC-
xmldsig-core-20080610/xmldsig-core-schema.xsd"/-->
    <!-- This import brings in the xmldsig Schema-->
    <!--xsd:import namespace="http://www.opengis.net/gml"
schemaLocation="http://schemas.opengis.net/gml/3.1.1/base/gml.xsd"/-->
    <!--xsd:import namespace="http://www.opengis.net/gml"
schemaLocation="http://schemas.opengis.net/gml/3.1.1/base/geometryBasic2d.xsd"/-->
    <xsd:import namespace="http://www.opengis.net/gml" schemaLocation="gml/3.1.1/base/gml.xsd"/>
    <!--xsd:import namespace="http://www.opengis.net/gml" schemaLocation="gml/3.1.1/base/geometryBasic2d.xsd"/-->
    <!-- This import brings in the gml Schema-->
    <xsd:element name="point" type="gml:PointType"/>
    <xsd:element name="polygon" type="gml:PolygonType"/>
    <xsd:simpleType name="DevIdSeries">
        <xsd:annotation>
            <xsd:documentation>
Full Name: DevIdSeries.
Description: Identifies the identifying authority for internationalization. For US it is FCC-ID, for UK it is Ofcom, etc.
    </xsd:documentation>
        </xsd:annotation>
        <xsd:restriction base="xsd:string">
            <xsd:enumeration value="FCC-ID"/>
            <xsd:enumeration value="OFCOM"/>
        </xsd:restriction>
    </xsd:simpleType>
    <!-- <xsd:simpleType name="RT-PollResponseStatusCodeSeries">      </xsd:simpleType> moved to XSD_V1-
2_WSDL-Specific_11-21-12.xsd -->
        <xsd:simpleType name="EntityType">
        <xsd:annotation>
            <xsd:documentation>
Full Name: EntityType.
Description: Enumeration of Entity Types
    </xsd:documentation>
        </xsd:annotation>
        <xsd:restriction base="xsd:string">
            <xsd:enumeration value="TV"/>
            <xsd:enumeration value="BAS"/>
            <xsd:enumeration value="M-PLMRS"/>
            <xsd:enumeration value="W-PLMRS"/>
            <xsd:enumeration value="ORTS"/>
            <xsd:enumeration value="RA"/>
            <xsd:enumeration value="LLPATV"/>
            <xsd:enumeration value="WMic"/>
            <xsd:enumeration value="WAVD"/>
            <xsd:enumeration value="TBAS"/>
        </xsd:restriction>
    </xsd:simpleType>
    <xsd:complexType name="Height_w_src">
        <xsd:annotation>
            <xsd:documentation>
Full Name: Height_w_src.
Description: A RadiationCenter height with src= indicator
```

```
    </xsd:documentation>
        </xsd:annotation>
        <xsd:simpleContent>
            <xsd:extension base="xsd:double">
                <xsd:attribute name="src" use="required">
                    <xsd:simpleType>
                        <xsd:restriction base="xsd:string">
                            <xsd:enumeration value="REGISTRANT"/>
                            <xsd:enumeration value="CALCULATED"/>
                        </xsd:restriction>
                    </xsd:simpleType>
                </xsd:attribute>
            </xsd:extension>
        </xsd:simpleContent>
    </xsd:complexType>
    <xsd:simpleType name="Scope">
        <xsd:annotation>
            <xsd:documentation>
Full Name: Scope.
Description: Scope of inter-DB file (All or Inc)
    </xsd:documentation>
        </xsd:annotation>
        <xsd:restriction base="xsd:string">
            <xsd:enumeration value="ALL"/>
            <xsd:enumeration value="INC"/>
        </xsd:restriction>
    </xsd:simpleType>
    <xsd:simpleType name="SpectrumType">
        <xsd:annotation>
            <xsd:documentation>
Full Name: SpectrumType.
Description: Type of Spectrum
    </xsd:documentation>
        </xsd:annotation>
        <xsd:restriction base="xsd:string">
            <xsd:enumeration value="US_TV_Spectrum"/>
        </xsd:restriction>
    </xsd:simpleType>
    <xsd:simpleType name="Version">
        <xsd:annotation>
            <xsd:documentation>
Full Name: Version.
Description: Version String - 1.1 defines that attribute info should be echoed back, 1.2 defines that the return of attribute info
is optional
    </xsd:documentation>
        </xsd:annotation>
        <xsd:restriction base="xsd:string">
            <xsd:enumeration value="1.1"/>
            <xsd:enumeration value="1.2"/>
        </xsd:restriction>
    </xsd:simpleType>
    <xsd:element name="Event" type="Event"/>
    <xsd:complexType name="Event">
        <xsd:sequence>
            <xsd:element name="eventTimes" type="ical:VeventType" maxOccurs="unbounded">
                <xsd:annotation>
                    <xsd:documentation>
            One or more VEVENT blocks for one-time or recurring events. Other blocks not processed.
        </xsd:documentation>
                </xsd:annotation>
            </xsd:element>
            <xsd:element name="eventChannel" type="eventChannel" maxOccurs="unbounded">
                <xsd:annotation>
                    <xsd:documentation>
        </xsd:documentation>
                </xsd:annotation>
```

```
            </xsd:element>
            <xsd:element name="presentationTime">
                <xsd:complexType>
                    <xsd:annotation>
                        <xsd:documentation> This is informative only and should not be used for generating protection.
    </xsd:documentation>
                    </xsd:annotation>
                    <xsd:sequence>
                        <xsd:element name="tzName" type="xsd:string"/>
                        <xsd:element name="startTime" type="ical:DateTimeType"/>
                        <xsd:element name="endTime" type="ical:DateTimeType"/>
                        <xsd:element name="untilTime" type="ical:DateTimeType" minOccurs="0"/>
                    </xsd:sequence>
                </xsd:complexType>
            </xsd:element>
        </xsd:sequence>
    </xsd:complexType>
    <xsd:element name="MVPD_Registration" type="MVPD_Registration"/>
    <xsd:complexType name="MVPD_Registration">
        <xsd:sequence>
            <xsd:element name="RegistrationDisposition" type="RegistrationDisposition">
                <xsd:annotation>
                    <xsd:documentation> Items needing to be signed in addition to MVPD info
    </xsd:documentation>
                </xsd:annotation>
            </xsd:element>
            <xsd:element name="mvpdRegistrant" type="vcard:VcardType">
                <xsd:annotation>
                    <xsd:documentation> See Section 5.12
    </xsd:documentation>
                </xsd:annotation>
            </xsd:element>
            <xsd:element name="mvpdContact" type="vcard:VcardType" minOccurs="0">
                <xsd:annotation>
                    <xsd:documentation> Optional Contact - not required by FCC rules
    </xsd:documentation>
                </xsd:annotation>
            </xsd:element>
            <xsd:element name="mvpdLocation" type="Location">
                <xsd:annotation>
                    <xsd:documentation> FCC requires lat/lon of Receive site, no antenna height info.
    </xsd:documentation>
                </xsd:annotation>
            </xsd:element>
            <xsd:element name="mvpdChannel" type="US_TV_Spectrum">
                <xsd:annotation>
                    <xsd:documentation>
            Flattened to single channel per object. Call Sign is an element of US_TV_Spectrum
    </xsd:documentation>
                </xsd:annotation>
            </xsd:element>
            <xsd:element name="mvpdXmiterLocation" type="Location">
                <xsd:annotation>
                    <xsd:documentation> FCC requires lat/lon of Transmitter, no antenna height info.
    </xsd:documentation>
                </xsd:annotation>
            </xsd:element>
        </xsd:sequence>
    </xsd:complexType>
    <xsd:element name="LP-Aux_Registration" type="LP-Aux_Registration"/>
    <xsd:complexType name="LP-Aux_Registration">
        <xsd:sequence>
            <xsd:element name="RegistrationDisposition" type="RegistrationDisposition">
                <xsd:annotation>
                    <xsd:documentation> Items needing to be signed in addition to LPAD info
    </xsd:documentation>
```

```
                </xsd:annotation>
            </xsd:element>
            <xsd:element name="lpauxRegistrant" type="vcard:VcardType">
                <xsd:annotation>
                    <xsd:documentation> See Section 5.12
        </xsd:documentation>
                </xsd:annotation>
            </xsd:element>
            <xsd:element name="lpauxContact" type="vcard:VcardType" minOccurs="0">
                <xsd:annotation>
                    <xsd:documentation>
            FCC distinguishes between "Owner" (Registrant) and "Contact" for this device. If this field is empty then
Registrant is also the Operational Contact
        </xsd:documentation>
                </xsd:annotation>
            </xsd:element>
            <xsd:element name="lpauxVenueName" type="xsd:string" minOccurs="0">
                <xsd:annotation>
                    <xsd:documentation> Name of Venue (Madison Square Garden, etc) Required for Unlicensed WM
</xsd:documentation>
                </xsd:annotation>
            </xsd:element>
            <xsd:element name="lpauxOperationalArea" minOccurs="0">
                <xsd:annotation>
                    <xsd:documentation>
For Licensed: present and will contain either 1-25 Points or 1-4 Quads. For Unlicensed: not present.
        </xsd:documentation>
                </xsd:annotation>
                <xsd:complexType>
                    <xsd:complexContent>
                        <xsd:extension base="OperationalArea">
                            <xsd:choice>
                                <xsd:element name="lpauxPointArea" type="PointAreaNew" maxOccurs="25">
                                    <xsd:annotation>
                                        <xsd:documentation> Up to 25 Points and no Quadrilateral Areas
            </xsd:documentation>
                                    </xsd:annotation>
                                </xsd:element>
                                <xsd:element name="lpauxQuadrilateralArea" type="QuadrilateralAreaNew"
maxOccurs="4">
                                    <xsd:annotation>
                                        <xsd:documentation>
Up to 4 sets of four vertices defining quadrilaterals and no Point Areas
            </xsd:documentation>
                                    </xsd:annotation>
                                </xsd:element>
                            </xsd:choice>
                        </xsd:extension>
                    </xsd:complexContent>
                </xsd:complexType>
            </xsd:element>
            <xsd:element name="lpauxCallSign" type="xsd:string">
                <xsd:annotation>
                    <xsd:documentation> Required for both Licensed and Unlicensed Devices
        </xsd:documentation>
                </xsd:annotation>
            </xsd:element>
            <xsd:element name="lpauxEvent" type="Event">
                <xsd:annotation>
                    <xsd:documentation>
            One or more VEVENTs which can have a single RRULE and no EXRULEs.
        </xsd:documentation>
                </xsd:annotation>
            </xsd:element>
            <xsd:element name="Licensed" type="xsd:string">
                <xsd:annotation>
```

```
                    <xsd:documentation>1=Licensed 0=Unlicensed </xsd:documentation>
                </xsd:annotation>
            </xsd:element>
            <!--xsd:element name="lpauxXmiterLocation" type="Location">
      <xsd:annotation>
        <xsd:documentation> Antenna height not required
        </xsd:documentation>
      </xsd:annotation>
    </xsd:element   - Removed 2/21/12 -->
        </xsd:sequence>
    </xsd:complexType>
    <xsd:element name="RadiationCenter" type="RadiationCenter"/>
    <xsd:complexType name="RadiationCenter">
        <xsd:annotation>
            <xsd:documentation> Was Antenna
    </xsd:documentation>
        </xsd:annotation>
        <xsd:sequence>
            <xsd:element name="rcAMSL" type="xsd:float" minOccurs="0">
                <xsd:annotation>
                    <xsd:documentation> Meters above mean sea level, not transmitted in inter-DB message
      </xsd:documentation>
                </xsd:annotation>
            </xsd:element>
            <xsd:element name="rcHAAT" type="xsd:float" minOccurs="0">
                <xsd:annotation>
                    <xsd:documentation>
            Meters above average terrain level, not Registrant-provided, calculated and sent in inter-DB message for
Fixed_TVBD
      </xsd:documentation>
                </xsd:annotation>
            </xsd:element>
            <xsd:element name="rcHAG" type="xsd:float" minOccurs="0">
                <xsd:annotation>
                    <xsd:documentation> Meters above ground, , Registrant- provided, for Fixed_TVBD only
      </xsd:documentation>
                </xsd:annotation>
            </xsd:element>
        </xsd:sequence>
    </xsd:complexType>
    <xsd:element name="DeviceId" type="DeviceId"/>
    <xsd:complexType name="DeviceId">
        <xsd:sequence>
            <xsd:element name="didSeriesName" type="DevIdSeries">
                <xsd:annotation>
                    <xsd:documentation> Enumeration, single current value is FCC-ID.
      </xsd:documentation>
                </xsd:annotation>
            </xsd:element>
            <xsd:element name="didSeriesValue" type="xsd:string"/>
            <xsd:element name="didSerialNumber" type="xsd:string"/>
        </xsd:sequence>
    </xsd:complexType>
    <xsd:element name="TV_Receive_Site_Registration" type="TV_Receive_Site_Registration"/>
    <xsd:complexType name="TV_Receive_Site_Registration">
        <xsd:annotation>
            <xsd:documentation> No longer includes Temporary BAS links
    </xsd:documentation>
        </xsd:annotation>
        <xsd:sequence>
            <xsd:element name="RegistrationDisposition" type="RegistrationDisposition">
                <xsd:annotation>
                    <xsd:documentation> Items needing to be signed in addition to TV Recv Site info
      </xsd:documentation>
                </xsd:annotation>
            </xsd:element>
```

```
        <xsd:element name="tvrcRegistrant" type="vcard:VcardType">
            <xsd:annotation>
                <xsd:documentation> See Section 5.12
</xsd:documentation>
            </xsd:annotation>
        </xsd:element>
        <xsd:element name="tvrcContact" type="vcard:VcardType" minOccurs="0">
            <xsd:annotation>
                <xsd:documentation> Optional Contact - not required by FCC rules
</xsd:documentation>
            </xsd:annotation>
        </xsd:element>
        <xsd:element name="tvrcXmitLocation" type="Location">
            <xsd:annotation>
                <xsd:documentation> Location of transmitter received at this site. Antenna Height info not required.
</xsd:documentation>
            </xsd:annotation>
        </xsd:element>
        <xsd:element name="tvrcXmitChannel" type="US_TV_Spectrum">
            <xsd:annotation>
                <xsd:documentation>
        Channel of transmitter received at this site. Call Sign is part of US_TV_Spectrum datatype
</xsd:documentation>
            </xsd:annotation>
        </xsd:element>
        <xsd:element name="tvrcRecvLocation" type="Location">
            <xsd:annotation>
                <xsd:documentation> Location of registered transmitter. Antenna Height info not required.
</xsd:documentation>
            </xsd:annotation>
        </xsd:element>
        <xsd:element name="tvrcRecvCallSign" type="US_TV_Spectrum">
            <xsd:annotation>
                <xsd:documentation>
        Channel of registered transmitter at Receive site is not required. Call Sign is part of US_TV_Spectrum datatype
</xsd:documentation>
            </xsd:annotation>
        </xsd:element>
    </xsd:sequence>
</xsd:complexType>
<xsd:element name="Contact" type="Contact"/>
<xsd:complexType name="Contact">
    <xsd:sequence>
        <xsd:element name="contactName" type="xsd:string" minOccurs="0">
            <xsd:annotation>
                <xsd:documentation> Must exist if contactOrgName does NOT exist
</xsd:documentation>
            </xsd:annotation>
        </xsd:element>
        <xsd:element name="contactOrgName" type="xsd:string" minOccurs="0">
            <xsd:annotation>
                <xsd:documentation>
        Must exist if contactName does NOT exist. Owner may be a corporation with unspecified contact person.
</xsd:documentation>
            </xsd:annotation>
        </xsd:element>
        <xsd:element name="contactAddressLine1" type="xsd:string"/>
        <xsd:element name="contactAddressLine2" type="xsd:string" minOccurs="0"/>
        <xsd:element name="contactCity" type="xsd:string"/>
        <xsd:element name="contactState" type="xsd:string"/>
        <xsd:element name="contactPC" type="xsd:string">
            <xsd:annotation>
                <xsd:documentation> Postal Code
</xsd:documentation>
            </xsd:annotation>
        </xsd:element>
```

```
            <xsd:element name="contactPhone" type="xsd:string"/>
            <xsd:element name="contactEmail" type="xsd:string"/>
        </xsd:sequence>
    </xsd:complexType>
    <xsd:element name="EnsembleDescription" type="EnsembleDescription"/>
    <xsd:complexType name="EnsembleDescription">
        <xsd:sequence>
            <xsd:element name="Registrar" type="xsd:string">
                <xsd:annotation>
                    <xsd:documentation> 4 char WSDB Administrator name
      </xsd:documentation>
                </xsd:annotation>
            </xsd:element>
            <xsd:element name="GenerationDate" type="xsd:dateTime">
                <xsd:annotation>
                    <xsd:documentation>
            Time and Date file/response was created. Date format is ISO 8601 and will contain T and Z
      </xsd:documentation>
                </xsd:annotation>
            </xsd:element>
            <xsd:element name="Scope" type="Scope">
                <xsd:annotation>
                    <xsd:documentation> Enumeration ALL or INC.   For real time web service, always INC
      </xsd:documentation>
                </xsd:annotation>
            </xsd:element>
            <xsd:element name="RecordsFrom" type="xsd:dateTime">
                <xsd:annotation>
                    <xsd:documentation>
            Date and Time of beginning of records range. Date format is ISO 8601 and will contain T and Z
      </xsd:documentation>
                </xsd:annotation>
            </xsd:element>
            <xsd:element name="RecordsTo" type="xsd:dateTime">
                <xsd:annotation>
                    <xsd:documentation>
            Date and Time of beginning of records range. Date format is ISO 8601 and will contain T and Z
      </xsd:documentation>
                </xsd:annotation>
            </xsd:element>
        </xsd:sequence>
    </xsd:complexType>
    <xsd:element name="Location" type="Location"/>
    <xsd:complexType name="Location">
        <xsd:sequence>
            <xsd:element name="locLatitude" type="xsd:double">
                <xsd:annotation>
                    <xsd:documentation> Decimal degrees, message has 6 digits past decimal point
      </xsd:documentation>
                </xsd:annotation>
            </xsd:element>
            <xsd:element name="locLongitude" type="xsd:double">
                <xsd:annotation>
                    <xsd:documentation> Decimal degrees, message has 6 digits past decimal point
      </xsd:documentation>
                </xsd:annotation>
            </xsd:element>
            <xsd:element name="locDatum" type="xsd:string">
                <xsd:annotation>
                    <xsd:documentation> NAD-83, WGS-84, etc.
      </xsd:documentation>
                </xsd:annotation>
            </xsd:element>
            <xsd:element name="locRadiationCenter" type="RadiationCenter">
                <xsd:annotation>
                    <xsd:documentation> Was locAntenna
```

```
    </xsd:documentation>
            </xsd:annotation>
        </xsd:element>
      </xsd:sequence>
  </xsd:complexType>
  <xsd:element name="Registration" type="Registration"/>
  <xsd:complexType name="Registration">
      <xsd:sequence>
          <xsd:element name="registrationType" type="xsd:string">
              <xsd:annotation>
                  <xsd:documentation> Enumeration of registration type
    </xsd:documentation>
              </xsd:annotation>
          </xsd:element>
          <xsd:choice>
              <xsd:annotation>
                  <xsd:documentation> Begin Choice
    </xsd:documentation>
              </xsd:annotation>
              <xsd:element name="Fixed_TVBD_Registration" type="Fixed_TVBD_Registration"/>
              <xsd:element name="LP-Aux_Registration" type="LP-Aux_Registration"/>
              <xsd:element name="MVPD_Registration" type="MVPD_Registration"/>
              <xsd:element name="TV_Receive_Site_Registration" type="TV_Receive_Site_Registration"/>
              <xsd:element name="Temp_BAS_Registration" type="Temp_BAS_Registration"/>
          </xsd:choice>
      </xsd:sequence>
  </xsd:complexType>
  <xsd:element name="Temp_BAS_Registration" type="Temp_BAS_Registration"/>
  <xsd:complexType name="Temp_BAS_Registration">
      <xsd:annotation>
          <xsd:documentation>
    No explicit event time information is included. Assume valid 720 for hours from registration, then expires
  </xsd:documentation>
      </xsd:annotation>
      <xsd:sequence>
          <xsd:element name="RegistrationDisposition" type="RegistrationDisposition">
              <xsd:annotation>
                  <xsd:documentation> Items needing to be signed in addition to Temp BAS Link info
    </xsd:documentation>
              </xsd:annotation>
          </xsd:element>
          <xsd:element name="tbasRegistrant" type="vcard:VcardType">
              <xsd:annotation>
                  <xsd:documentation> See Section 5.12 - Contact info for Registrant
    </xsd:documentation>
              </xsd:annotation>
          </xsd:element>
          <xsd:element name="tbasContact" type="vcard:VcardType" minOccurs="0">
              <xsd:annotation>
                  <xsd:documentation> If this element is blank then Owner is also the Operational Contact
    </xsd:documentation>
              </xsd:annotation>
          </xsd:element>
          <xsd:element name="tbasRecvLocation" type="Location">
              <xsd:annotation>
                  <xsd:documentation> lat/lon of Receive site, antenna height not required
    </xsd:documentation>
              </xsd:annotation>
          </xsd:element>
          <xsd:element name="tbasChannel" type="US_TV_Spectrum">
              <xsd:annotation>
                  <xsd:documentation> Single channel per object. Call Sign is an element of US_TV_Spectrum
    </xsd:documentation>
              </xsd:annotation>
          </xsd:element>
          <xsd:element name="tbasXmitLocation" type="Location">
```

```
                <xsd:annotation>
                    <xsd:documentation> lat/lon of Transmitter, no antenna height info.
        </xsd:documentation>
                </xsd:annotation>
            </xsd:element>
            <xsd:element name="tbasEvent" type="Event">
                <xsd:annotation>
                    <xsd:documentation>
            No explicit event time information is included. Assume valid 720 for hours from registration, then expires
        </xsd:documentation>
                </xsd:annotation>
            </xsd:element>
        </xsd:sequence>
        <!-- <xsd:attribute name="version" type="xsd:string" use="required"/>     unwanted version attribute removed 8/15/11
- gdk -->
    </xsd:complexType>
    <xsd:element name="eventChannel" type="eventChannel"/>
    <xsd:complexType name="eventChannel">
        <xsd:sequence>
            <xsd:element name="chanNum" type="xsd:int">
                <xsd:annotation>
                    <xsd:documentation> Channel Number
        </xsd:documentation>
                </xsd:annotation>
            </xsd:element>
            <!-- <xsd:element name="eventNumDevices" type="xsd:int">
      <xsd:annotation>
        <xsd:documentation>
        </xsd:documentation>
      </xsd:annotation>
    </xsd:element> removed 8/25/11 gdk -->
        </xsd:sequence>
    </xsd:complexType>
    <xsd:element name="Fixed_TVBD_Registration" type="Fixed_TVBD_Registration"/>
    <xsd:complexType name="Fixed_TVBD_Registration">
        <xsd:sequence>
            <xsd:element name="RegistrationDisposition" type="RegistrationDisposition">
                <xsd:annotation>
                    <xsd:documentation> Items needing to be signed in addition to Fixed_TVBD info
        </xsd:documentation>
                </xsd:annotation>
            </xsd:element>
            <xsd:element name="tvbdRegistrant" type="vcard:VcardType">
                <xsd:annotation>
                    <xsd:documentation> See Section 5.12
        </xsd:documentation>
                </xsd:annotation>
            </xsd:element>
            <xsd:element name="tvbdContact" type="vcard:VcardType" minOccurs="0">
                <xsd:annotation>
                    <xsd:documentation>
            FCC distinguishes between "Owner" and "Contact" for this device. If this field is blank then Owner is also the
Operational Contact
        </xsd:documentation>
                </xsd:annotation>
            </xsd:element>
            <xsd:element name="tvbdRegLocation" type="Location">
                <xsd:annotation>
                    <xsd:documentation> Antenna Height is required
        </xsd:documentation>
                </xsd:annotation>
            </xsd:element>
            <xsd:element name="tvbdRegDeviceId" type="DeviceId">
                <xsd:annotation>
                    <xsd:documentation>
            didSeriesName = FCC ID within DeviceId datatype, also includes Manufacturer's Serial Number
```

```
  </xsd:documentation>
            </xsd:annotation>
        </xsd:element>
    </xsd:sequence>
</xsd:complexType>
<xsd:element name="US_TV_Spectrum" type="US_TV_Spectrum"/>
<xsd:complexType name="US_TV_Spectrum">
    <xsd:sequence>
        <xsd:element name="ustChannel" type="xsd:int" minOccurs="0"/>
        <xsd:element name="ustCallSign" type="xsd:string" minOccurs="0"/>
    </xsd:sequence>
</xsd:complexType>
<xsd:element name="RegistrationDisposition" type="RegistrationDisposition"/>
<xsd:complexType name="RegistrationDisposition">
    <xsd:sequence>
        <xsd:element name="RegistrationDate" type="xsd:dateTime">
            <xsd:annotation>
                <xsd:documentation> Date format is ISO 8601 and will contain T and Z
  </xsd:documentation>
            </xsd:annotation>
        </xsd:element>
        <xsd:element name="RegID" type="xsd:string">
            <xsd:annotation>
                <xsd:documentation> Registration ID YYMMDDWSDBnnnnnnn unique among all record types
  </xsd:documentation>
            </xsd:annotation>
        </xsd:element>
        <xsd:element name="Action" type="xsd:int">
            <xsd:annotation>
                <xsd:documentation> 2=Modify 1=Add 0=Delete
  </xsd:documentation>
            </xsd:annotation>
        </xsd:element>
        <!-- <xsd:element name="registrationInformation" type="xsd:string" minOccurs="0">
 <xsd:annotation>
  <xsd:documentation> Populated if RegistrationStatusCode not 0 (registration not successful)
  </xsd:documentation>
 </xsd:annotation>
</xsd:element> removed 8/25/11 gdk -->
        <!-- <xsd:element name="RegistrationStatusCode" type="xsd:int">
 <xsd:annotation>
  <xsd:documentation>
        0 if registration was successful, and 1 if the registering  DB failed the registration of that object
  </xsd:documentation>
 </xsd:annotation>
</xsd:element> removed 8/25/11 gdk -->
    </xsd:sequence>
</xsd:complexType>
<xsd:element name="RegistrationRecordEnsemble" type="RegistrationRecordEnsemble"/>
<xsd:complexType name="RegistrationRecordEnsemble">
    <xsd:annotation>
        <xsd:documentation> Contains all of the Registration Records. Use inline version attribute
</xsd:documentation>
    </xsd:annotation>
    <xsd:sequence>
        <xsd:element name="EnsembleDescription" type="EnsembleDescription">
            <xsd:annotation>
                <xsd:documentation> File metadata
  </xsd:documentation>
            </xsd:annotation>
        </xsd:element>
        <xsd:element name="Registration" type="Registration" minOccurs="0" maxOccurs="unbounded"/>
        <xsd:element name="NextTransactionID" type="xsd:string">
            <xsd:annotation>
```

```
                    <xsd:documentation>Inserted when RR Ensemble is sent in response to either RealTimePollRequest or
FTP. It gives the client a value which the client uses as RequestedTransactionID in the next
RealTimePollRequest</xsd:documentation>
                    </xsd:annotation>
                </xsd:element>
                <xsd:element ref="ds:Signature"/>
                <!--xsd:element name="Signature" type="ds:SignatureType"/-->
                <!-- changed per Robin 10-29-12-->
            </xsd:sequence>
            <xsd:attribute name="version" type="xsd:string" use="required"/>
            <!-- The only occurrence of Version is in RegistrationRecordEnsemble -->
        </xsd:complexType>
        <!-- Added gdk 8/2/11 -->
        <!-- <xsd:element name="TransactionID" type="xsd:string"> </xsd:element> moved to XSD_V1-2_WSDL-Specific_11-
21-12.xsd -->
        <!-- <xsd:complexType name="TransactionID"> </xsd:complexType> moved to XSD_V1-2_WSDL-Specific_11-21-
12.xsd -->
        <xsd:element name="OperationalArea">
            <xsd:annotation>
                <xsd:documentation>Points are in terms of gml:pos with lat first, then lon</xsd:documentation>
            </xsd:annotation>
            <xsd:complexType>
                <xsd:complexContent>
                    <xsd:extension base="OperationalArea">
                        <xsd:choice>
                            <xsd:element name="PointArea" type="gml:PointType"/>
                            <xsd:element name="QuadrilateralArea" type="gml:PolygonType"/>
                        </xsd:choice>
                    </xsd:extension>
                </xsd:complexContent>
            </xsd:complexType>
        </xsd:element>
        <xsd:complexType name="OperationalArea">
            <xsd:annotation>
                <xsd:documentation>
                The area within which the LP-Aux device will operate, defined by one of two geometric definitions: Point,
Quadrilateral simple polygon.
        </xsd:documentation>
            </xsd:annotation>
        </xsd:complexType>
        <!-- <xsd:element name="RealTimePollRequest" type="RealTimePollRequest"/> moved to XSD_V1-2_WSDL-
Specific_11-21-12.xsd -->
        <!-- <xsd:complexType name="RealTimePollRequest"> moved to XSD_V1-2_WSDL-Specific_11-21-12.xsd -->
        <!-- <xsd:element name="RealTimePollResponse" type="RealTimePollResponse"/> moved to XSD_V1-2_WSDL-
Specific_11-21-12.xsd -->
        <!-- <xsd:complexType name="RealTimePollResponse"> moved to XSD_V1-2_WSDL-Specific_11-21-12.xsd -->
        <xsd:element name="PointAreaNew" type="PointAreaNew"/>
        <xsd:complexType name="PointAreaNew">
            <xsd:sequence>
                <xsd:element name="CenterPoint" type="gml:PointType">
                    <xsd:annotation>
                        <xsd:documentation> Center Point defined as gml:PointType
          </xsd:documentation>
                    </xsd:annotation>
                </xsd:element>
            </xsd:sequence>
        </xsd:complexType>
        <xsd:element name="QuadrilateralAreaNew" type="QuadrilateralAreaNew"/>
        <xsd:complexType name="QuadrilateralAreaNew">
            <xsd:sequence>
                <xsd:element name="NE_Point" type="gml:PointType">
                    <xsd:annotation>
                        <xsd:documentation> First point, Northeast  quadrant, gml:PointType
          </xsd:documentation>
                    </xsd:annotation>
                </xsd:element>
```

```
            <xsd:element name="SE_Point" type="gml:PointType">
                <xsd:annotation>
                    <xsd:documentation> Second point, Southeast  quadrant, gml:PointType
      </xsd:documentation>
                </xsd:annotation>
            </xsd:element>
            <xsd:element name="SW_Point" type="gml:PointType">
                <xsd:annotation>
                    <xsd:documentation> Third point, Southwest  quadrant, gml:PointType
      </xsd:documentation>
                </xsd:annotation>
            </xsd:element>
            <xsd:element name="NW_Point" type="gml:PointType">
                <xsd:annotation>
                    <xsd:documentation> Last point, Northwest quadrant, gml:PointType
      </xsd:documentation>
                </xsd:annotation>
            </xsd:element>
        </xsd:sequence>
    </xsd:complexType>
</xsd:schema>
```

11 Appendix C – WSDL-specific Secondary XSD

This appendix contains the WSDL-Specific XSD described in Section 4 called XSD_V1-2_WSDL-Specific_11-21-12.xsd

```
<?xml version="1.0"?>
<!-- edited with XMLSPY v5 rel. 4 U (http://www.xmlspy.com) by Gabor Kiss (Telcordia Flash) -->
<!-- last edited 08/06/12 for Interop Spec V1.2 - Gabor Kiss -->
<!-- Generated by Telcordia STRIDE SchemaGen: 1.9 -->
<!-- Copyright (c) 2011 Telcordia Technologies, Inc.  All rights reserved. -->
<!-- Schema Identifier: Default ID (Fri May 20 16:54:06 EDT 2011) -->
<!-- XSD_PATH_NAME: InterDB/xsd -->
<xsd:schema targetNamespace="http://www.whitespace-db-providers.org/2011//InterDB/ws" xmlns="http://www.whitespace-
db-providers.org/2011//InterDB/ws" xmlns:xsd="http://www.w3.org/2001/XMLSchema" elementFormDefault="qualified"
attributeFormDefault="unqualified">
    <xsd:simpleType name="RT-PollResponseStatusCodeSeries">
        <xsd:annotation>
            <xsd:documentation>
Full Name: Realtime Poll response Code.
Description: Return code from the Web Services server indicating ability to respond to RealtimePollRequest
Meanings are: 0 - Success
1 = TransactionID stale, recover from file
2 = Bad Request
3 = Requested version not supported
4 = No New Records (no RegistrationRecordEnsemble present)
5 = Database AccessServer Error
    </xsd:documentation>
        </xsd:annotation>
        <xsd:restriction base="xsd:int">
            <xsd:enumeration value="0"/>
            <xsd:enumeration value="1"/>
            <xsd:enumeration value="2"/>
            <xsd:enumeration value="3"/>
            <xsd:enumeration value="4"/>
            <xsd:enumeration value="5"/>
        </xsd:restriction>
    </xsd:simpleType>
    <xsd:element name="RealTimePollRequest" type="RealTimePollRequest"/>
    <xsd:complexType name="RealTimePollRequest">
        <xsd:sequence>
            <xsd:element name="RequestedTransactionID" type="xsd:string">
                <xsd:annotation>
                    <xsd:documentation>The value of NextTransactionID which was received in the
RegistrationRecordEnsemble of the last valid response to a poll or in a full download via FTP </xsd:documentation>
                </xsd:annotation>
                <!-- Changed from type=xsd:string 2/21/12 -->
            </xsd:element>
            <xsd:element name="Command" type="xsd:string">
                <xsd:annotation>
                    <xsd:documentation>wsdPoll is the only allowed value</xsd:documentation>
                </xsd:annotation>
            </xsd:element>
            <xsd:element name="XsdVersion" type="xsd:string">
                <xsd:annotation>
                    <xsd:documentation>Version of xsd requested, e.g. 1.2.3</xsd:documentation>
                </xsd:annotation>
            </xsd:element>
        </xsd:sequence>
        <!-- <xsd:attribute name="version" type="xsd:string" use="required"/> - removed 8/16/11 - gdk -->
    </xsd:complexType>
```

```
    <xsd:element name="RealTimePollResponse" type="RealTimePollResponse"/>
    <xsd:complexType name="RealTimePollResponse">
        <xsd:sequence>
            <xsd:element name="RequestedTransactionID" type="xsd:string">
                <xsd:annotation>
                    <xsd:documentation>Echo the value of CurrentTransactionID received in the
RealTimePollRequest</xsd:documentation>
                </xsd:annotation>
                <!-- Changed from type=xsd:string 2/21/12 -->
            </xsd:element>
            <xsd:element name="Command" type="xsd:string">
                <xsd:annotation>
                    <xsd:documentation>wsdPollResponse is the only allowed value</xsd:documentation>
                </xsd:annotation>
            </xsd:element>
            <xsd:element name="RegistrationRecordEnsemble" type="xsd:string" minOccurs="0">
                <xsd:annotation>
                    <xsd:documentation>Records changed since last poll</xsd:documentation>
                </xsd:annotation>
            </xsd:element>
            <xsd:element name="XsdVersion" type="xsd:string">
                <xsd:annotation>
                    <xsd:documentation>Version of xsd in this response, e.g. 1.2.3</xsd:documentation>
                </xsd:annotation>
            </xsd:element>
            <xsd:element name="NextTransactionID" type="xsd:string" minOccurs="0">
                <xsd:annotation>
                    <xsd:documentation>Inserted in RealTimePollResponse when an RR Ensemble is not sent in response
to a RealTimePollRequest due to No New Records. Used by client as RequestedTransactionID in the next
RealTimePollRequest</xsd:documentation>
                </xsd:annotation>
            </xsd:element>
            <xsd:element name="RT-PollStatusCode" type="RT-PollResponseStatusCodeSeries"/>
        </xsd:sequence>
    </xsd:complexType>
</xsd:schema>
```

12 Appendix D – Real Time Poll Web Services WSDL

This appendix contains the WSDL described in Section 4 called WSDL_V1-2_Checkpoint_11-21-12.wsdl

```
<?xml version="1.0" encoding="UTF-8" standalone="yes"?>
<!-- edited with XMLSPY v5 rel. 4 U (http://www.xmlspy.com) by Gabor Kiss (Telcordia Flash) -->
<!-- edited with XMLSpy v2006 rel. 3 sp2 (http://www.altova.com) by FRANCESCO CARUSO (TELCORDIA
TECHNOLOGIES) -->
<wsdl:definitions xmlns:wsdl="http://schemas.xmlsoap.org/wsdl/" xmlns:xsd="http://www.w3.org/2001/XMLSchema"
xmlns:soap="http://schemas.xmlsoap.org/wsdl/soap/" xmlns:ns="urn:ietf:params:xml:ns:ereg1"
xmlns:InterDB="http://www.whitespace-db-providers.org/2011//InterDB/xsd" xmlns="http://www.whitespace-db-
providers.org/2011//InterDB/ws" name="WSpaces_WS_SOAPHTTP" targetNamespace="http://www.whitespace-db-
providers.org/2011//InterDB/ws">
    <wsdl:types>
        <xsd:schema>
            <xsd:import schemaLocation="XSD_V1-2_WSDL-Specific_11-21-12.xsd" namespace="http://www.whitespace-
db-providers.org/2011//InterDB/ws"/>
        </xsd:schema>
    </wsdl:types>
    <wsdl:message name="RealTimePollRequest">
        <wsdl:part name="parameters" element="RealTimePollRequest"/>
    </wsdl:message>
```

```
    <wsdl:message name="RealTimePollResponse">
        <wsdl:part name="parameters" element="RealTimePollResponse"/>
    </wsdl:message>
    <wsdl:portType name="WSpaces_WS_PT">
        <wsdl:operation name="RealTimePoll">
            <wsdl:input message="RealTimePollRequest"/>
            <wsdl:output message="RealTimePollResponse"/>
        </wsdl:operation>
    </wsdl:portType>
    <wsdl:binding name="WSpaces_WS_SOAPHTTP_Binding" type="WSpaces_WS_PT">
        <soap:binding style="document" transport="http://schemas.xmlsoap.org/soap/http"/>
        <wsdl:operation name="RealTimePoll">
            <soap:operation soapAction="http://www.whitespace-db-providers.org/2011//InterDB/ws/RealTimePoll"/>
            <wsdl:input>
                <soap:body use="literal"/>
            </wsdl:input>
            <wsdl:output>
                <soap:body use="literal"/>
            </wsdl:output>
        </wsdl:operation>
    </wsdl:binding>
    <wsdl:service name="WSpaces_WS_SVC">
        <wsdl:port name="WSpaces_WS_Service" binding="WSpaces_WS_SOAPHTTP_Binding">
            <soap:address location="http://localhost:8080/ws/RealTimePoll"/>
        </wsdl:port>
    </wsdl:service>
    <!-- Document/Literal Wrapped WSDL style -->
</wsdl:definitions>
```