Quarterly Data Report
Rural Healthcare Pilot Program
Pacific Broadband Telehealth Demonstration Project
HCP Number: 17242
December 31, 2012

1. Project Contact and Coordination Information

a. Identify the project leader(s) and respective business affiliations.

Project Coordinator:
Norman Okamura, Principal Investigator
Telecommunications and Information Policy Group
Social Science Research Institute, University of Hawaii

Associate Project Coordinator:
Christina Higa, Associate Director
Telecommunications and Information Policy Group
Social Science Research Institute, University of Hawaii

b. Provide a complete address for postal delivery and the telephone, fax, and e-mail address for the responsible administrative official.

Norman Okamura
2424 Maile Way, #713
Honolulu, HI 96822
Phone: (808) 956-2909
Fax: (808) 956-8019
Email: norman@tipg.net

Christina Higa
2424 Maile Way, #713
Honolulu, HI 96822
Phone: (808) 956-7224
Fax: (808) 956-8019
Email: christina@tipg.net

c. Identify the organization that is legally and financially responsible for the conduct of activities supported by the award.

Telecommunications and Information Policy Group
Social Science Research Institute, University of Hawaii

d. Explain how project is being coordinated throughout the state or region.

The Pacific Broadband Telehealth Demonstration Project is a regional project involving many public and private healthcare organizations in Hawaii and the Pacific Region territories. The project is coordinated through a Technical Committee, individual health care provider sites, and through telehealth user groups. An Advisory Committee and Clinical Applications Committee will be established at a later date.

The Technical Committee includes representatives from each major network partners including the State Department of Health (Health Information Systems Office), University of Hawaii (Information Technology Services and TIPG), and the Hawaii Health Systems Corporation (Chief Information Officer). The Technical Committee meets on a regular basis to exchange information regarding the status on the State Institutional Network interconnection; to obtain current equipment inventory, and to coordinate network planning and configuration.

The Project Team also conducts individual health care provider site meetings to share information, coordinate activities, evaluate technical options and pricing for the individual sites.

In addition to technical coordination, the Project Team is also coordinating with several key telehealth, telemedicine and health informatics stakeholders to obtain current network users needs and inform these groups on the status of the PBTDP network development and coordination. These groups include the Hawaii Telehealth Collaborative; the Hawaii Information and Management Systems Society; the Hawaii Information Exchange project; and various State of Hawaii Department of Health agencies.

A wiki site has also been setup with access for each site to contribute information and coordinate efforts.

2. Identify all health care facilities included in the network.

See list in Attachment 1.

3. Network Narrative: In the first quarterly report following the completion of the competitive bidding process and the selection of vendors, the selected participant must submit an updated technical description of the communications network that it intends to implement, which takes into account the results its network design studies and negotiations with its vendors. This technical description should provide, where applicable:

a. Brief description of the backbone network of the dedicated health care network, e.g., MPLS network, carrier-provided VPN, a SONET ring;

The network backbone consists of several types of technologies. These technologies include carrier-provided circuits (either clear-channel T1s or IP Data Services) with VPN tunnels, newly installed fiber optics for cross-connection into the existing State

backbone with wave division multiplexing, short-haul wireless links, and some other possible technologies which are being considered.

b. Explanation of how health care provider sites will connect to (or access) the network, including the access technologies/services and transmission speeds;

Contracts have been established to build out parts of the network to eligible health care providers. We continue to finalize additional contracts to build the network as well as authorizing other RFP's/IFB's with USAC. The contracts have/will establish T-1 links running at a minimum of 1.544Mbps. Some HCP's will utilize one (1) T-1 while other sites will utilize multiple T-1's.

The RFP's/IFB's will help to determine the optimal option for connecting via fiber, point-to-point leased services, or short range wireless technologies. These technologies provide various transmission speeds and will be dependant on the needs of the individual sites.

c. Explanation of how and where the network will connect to a national backbone such as NLR or Internet2;

We are not able to identify all of the health care providers that are or will be connected to the Internet2 and therefore at this time we will not plan for network connection to Internet2. Currently there are no organizational relationships between PBTDN sites and Internet2 health care providers. This is something we hope to pursue more in the future.

d. Number of miles of fiber construction, and whether the fiber is buried or aerial;

The length of fiber construction is being analyzed along with the feasibility of both buried and aerial fiber and will be addressed after considering the options proposed as a response to the RFPs.

e. Special systems or services for network management or maintenance (if applicable) and where such systems reside or are based.

Cross-connections to sites will transit several organizational networks due to the large number of participating sites. Each major system that is participating will manage and maintain portions of the network as appropriate. Final responsibilities are to be determined.

4. List of Connected Health Care Providers: Provide information below for all eligible and non-eligible health care provider sites that, as of the close of the most recent reporting period, are connected to the network and operational.

a. Health care provider site;
Molokai General Hospital

b. Eligible provider (Yes/No);
Yes

c. Type of network connection (e.g., fiber, copper, wireless);
Leased 10Mbps Service

d. How connection is provided (e.g., carrier-provided service; self-constructed; leased facility);

Carrier-provided service

e. *Service and/or speed of connection (e.g., DS1, DS3, DSL, OC3, Metro Ethernet (10 Mbps);*
   Metro Ethernet 10Mbps

f. *Gateway to NLR, Internet2, or the Public Internet (Yes/No);*
   No
   Federal Communications Commission FCC 07-19874

g. *Site Equipment (e.g., router, switch, SONET ADM, WDM), including manufacturer name and model number.*
   NA – utilized existing equipment, no funds were used for equipment

h. *Provide a logical diagram or map of the network.*

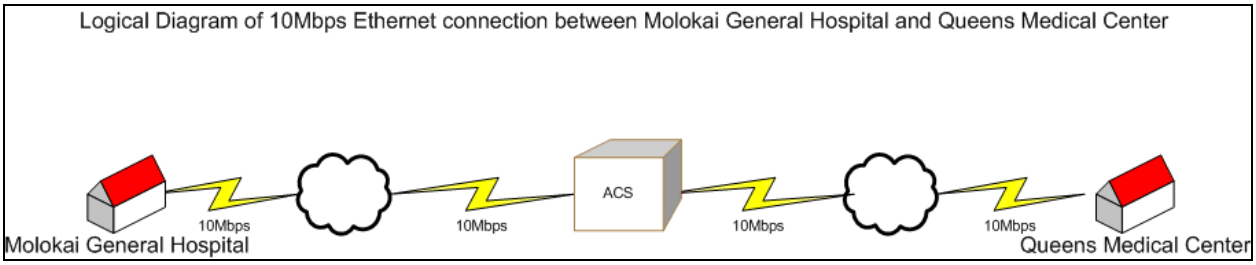

---

a. *Health care provider site;*
   Physicians Center at Mililani

i. *Eligible provider (Yes/No);*
   Yes

j. *Type of network connection (e.g., fiber, copper, wireless);*
   Leased Carrier Service

k. *How connection is provided (e.g., carrier-provided service; self-constructed; leased facility);*
   Carrier-provided service

l. *Service and/or speed of connection (e.g., DS1, DS3, DSL, OC3, Metro Ethernet (10 Mbps);*
   (2) T1 @ 1.544Mbps each

m. *Gateway to NLR, Internet2, or the Public Internet (Yes/No);*
   No
   Federal Communications Commission FCC 07-19874

n. *Site Equipment (e.g., router, switch, SONET ADM, WDM), including manufacturer name and model number.*
   Cisco 2921 Router

o. Provide a logical diagram or map of the network.

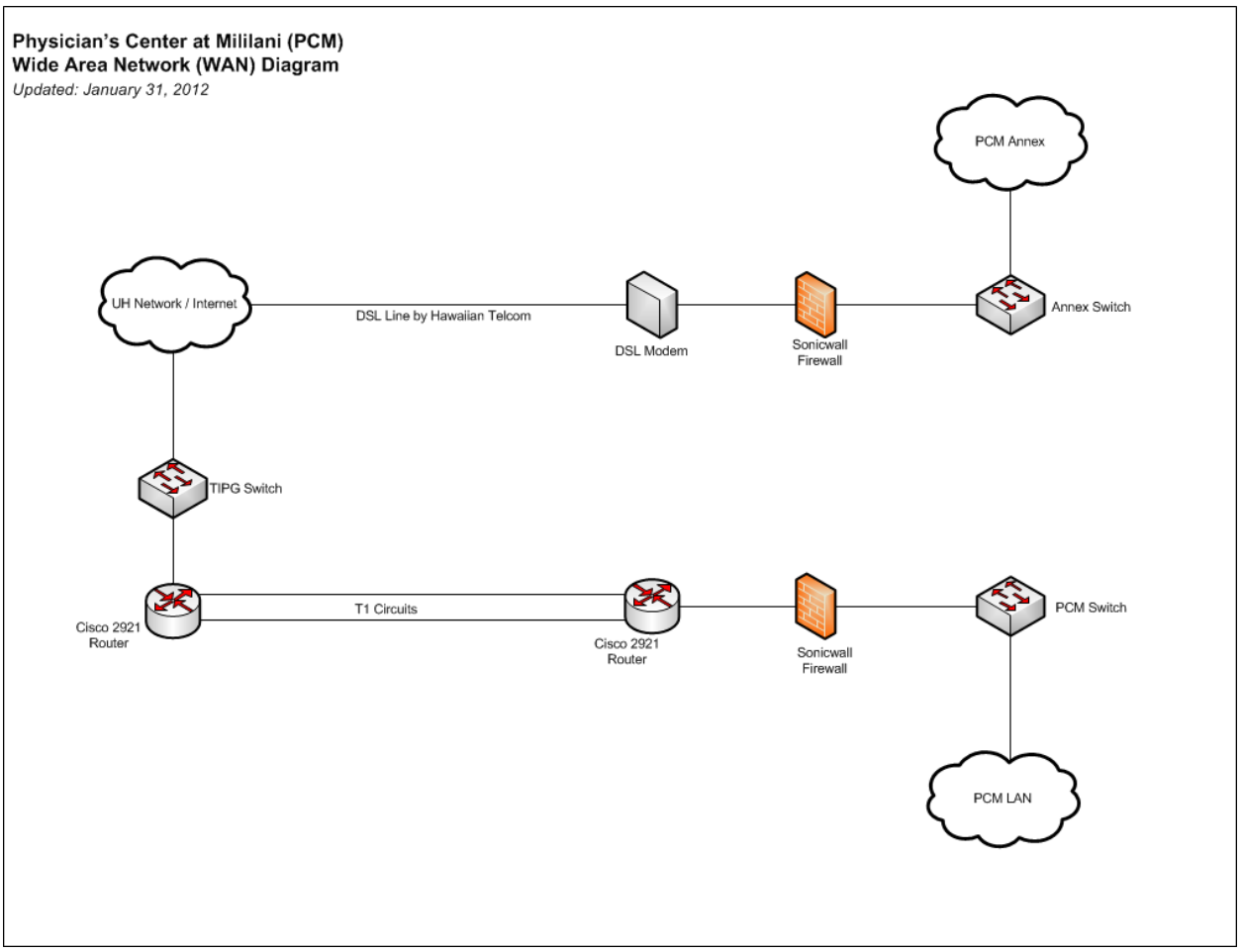

---

a. Health care provider site;

Hawaii Health Systems Corporation (HHSC):

Leahi Hospital,
Maluhia Hosptial,
Kahuku Hospital,
Lanai Hospital,
Hale Hoola Hamakua,
Kohala Hospital,
West Kauai Medical Center,
Samuel Mahelona Memorial Hospital,
West Kauai Clinic – Kalaheo,
West Kauai Clinic – Port Allen,
Maui Memorial Medical Center,
Kula Hospital,
Kona Community Hospital,
Hilo Medical Center, and
Kau Hospital.

b. Eligible provider (Yes/No);

Yes

c. *Type of network connection (e.g., fiber, copper, wireless);*

Leased carrier services

d. *How connection is provided (e.g., carrier-provided service; self-constructed; leased facility);*

Carrier-provided service

e. *Service and/or speed of connection (e.g., DS1, DS3, DSL, OC3, Metro Ethernet (10 Mbps);*

Hawaii Health Systems Corporation (HHSC):

Leahi Hospital – (2) Channelized DS3 @ 45Mbps each
Maluhia Hosptial – (2) T1 @ 1.544Mbps each
Kahuku Hospital – (2) T1 @ 1.544Mbps each
Lanai Hospital – (1) T1 @ 1.544Mbps each
Hale Hoola Hamakua – (1) T1 @ 1.544Mbps each
Kohala Hospital – (1) T1 @ 1.544Mbps each
West Kauai Medical Center – (3) T1 @ 1.544Mbps each
Samuel Mahelona Memorial Hospital – (2) T1 @ 1.544Mbps each
West Kauai Clinic – Kalaheo – (1) T1 @ 1.544Mbps each
West Kauai Clinic – Port Allen – (1) T1 @ 1.544Mbps each
Maui Memorial Medical Center – (6) T1 @ 1.544Mbps each
Kula Hospital – (1) T1 @ 1.544Mbps each
Kona Community Hospital – (4) T1 @ 1.544Mbps each
Hilo Medical Center – (4) T1 @ 1.544Mbps each
Kau Hospital – (1) T1 @ 1.544Mbps each

f. *Gateway to NLR, Internet2, or the Public Internet (Yes/No);*

No
Federal Communications Commission FCC 07-19874

g. *Site Equipment (e.g., router, switch, SONET ADM, WDM), including manufacturer name and model number;*

CISCO ASR 1002 Router, Cisco ASR 1000 Router, Cisco Catalyst Metro Ethernet Switch, Sorrento SN-LXB11319 DWDM Switch.

h. Provide a logical diagram or map of the network;

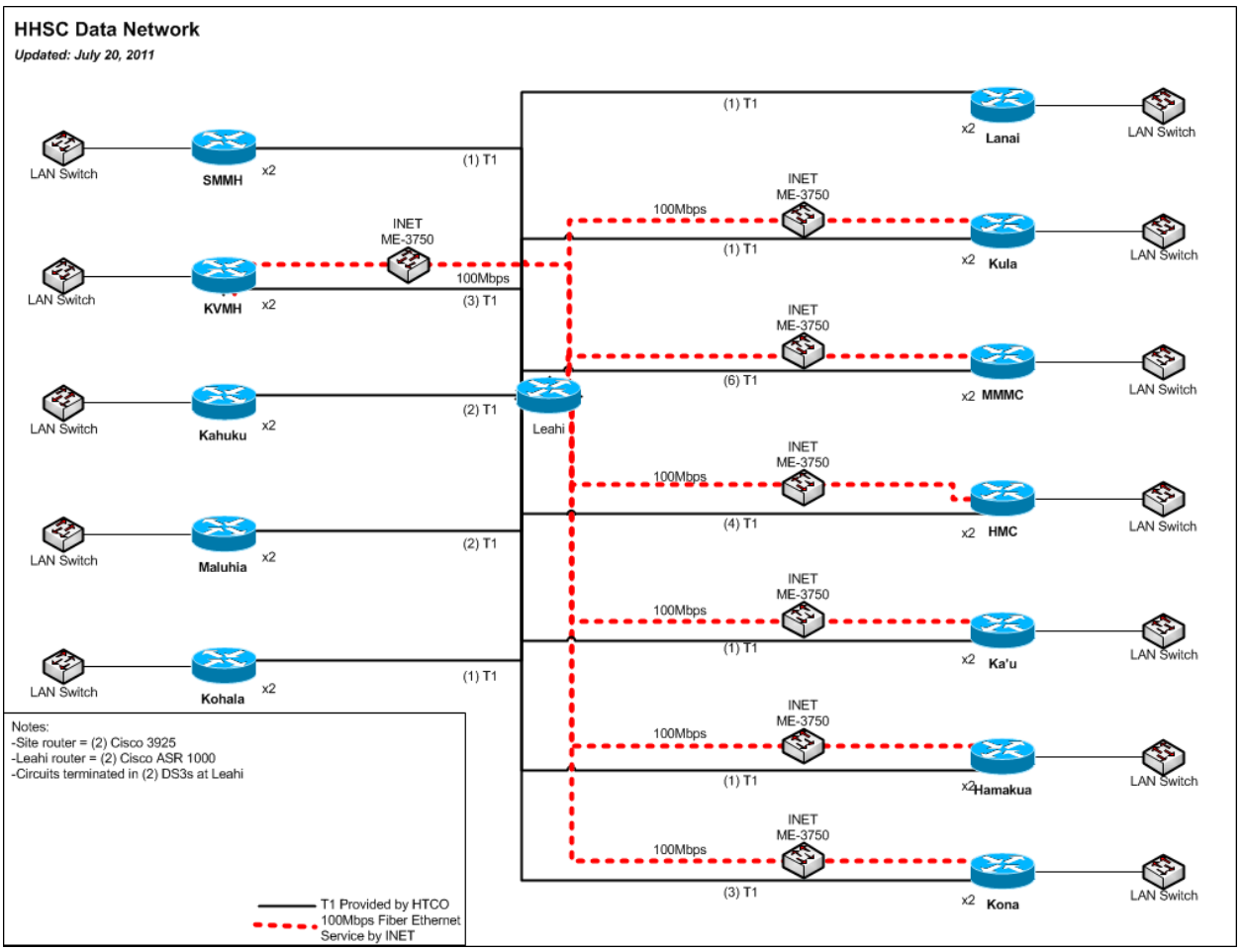

---

a. Health care provider site:

Hui Malama Na O'iwi

- Hui Malama Na O'iwi Admin & Health
- Hui Malama Na O'iwi Hilo
- Hui Malama Na O'iwi Kona
- Hui Malama Na O'iwi Naalehu
- Hui Malama Na O'iwi Pahoa
- Hui Malama Na O'iwi Waimea

b. Eligible provider (Yes/No);

Yes

c. Type of network connection (e.g., fiber, copper, wireless);

Leased Carrier T1 Services

d. How connection is provided (e.g., carrier-provided service; self-constructed; leased facility);

Carrier-provided service

e. Service and/or speed of connection (e.g., DS1, DS3, DSL, OC3, Metro Ethernet (10 Mbps);

Hui Malama Na O'iwi – 10Mbps Internet Service

Hui Malama Na O'iwi Admin & Health – (1) T1 @ 1.544Mbps each
Hui Malama Na O'iwi Hilo – (1) T1 @ 1.544Mbps each
Hui Malama Na O'iwi Kona – (1) T1 @ 1.544Mbps each
Hui Malama Na O'iwi Naalehu – (1) T1 @ 1.544Mbps each
Hui Malama Na O'iwi Pahoa – (1) T1 @ 1.544Mbps each
Hui Malama Na O'iwi Waimea – (1) T1 @ 1.544Mbps each

f. *Gateway to NLR, Internet2, or the Public Internet (Yes/No);*

No
Federal Communications Commission FCC 07-19874

g. *Site Equipment (e.g., router, switch, SONET ADM, WDM), including manufacturer name and model number;*

Cisco 2921 Router, Cisco 3925 Router, Cisco EtherSwitch.

h. Provide a logical diagram or map of the network;

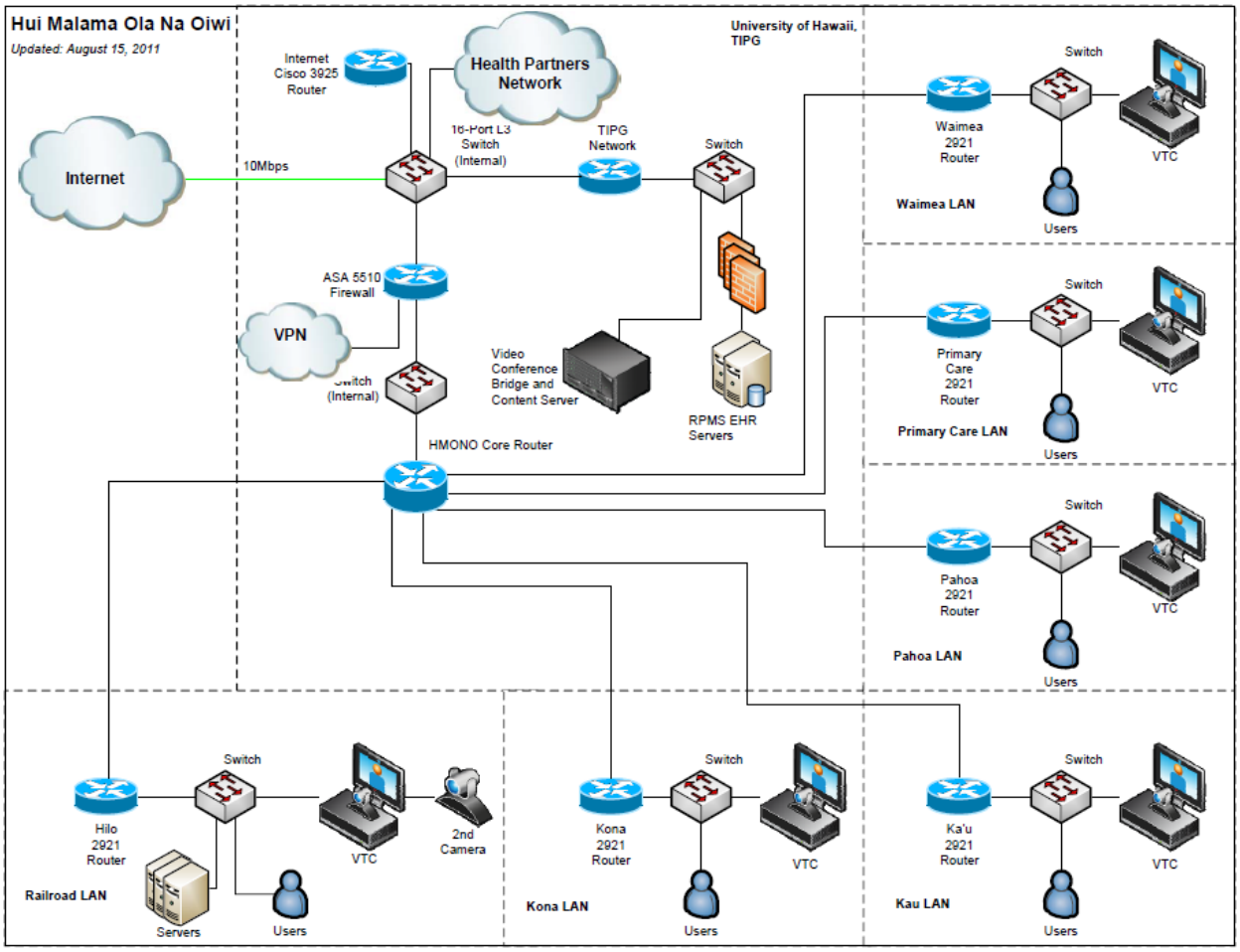

---

a. *Health care provider site:*

Bay Clinic, Inc.

Bay Clinic Hilo Family Health
Bay Clinic Family Health Center
Bay Clinic Kau Family Health Center
Bay Clinic Keeau Family Health Center

Bay Clinic Pahoa Family health Center
Bay Clinic Pahoa Women's Health Center

b. *Eligible provider (Yes/No);*
Yes

c. *Type of network connection (e.g., fiber, copper, wireless);*
Leased Carrier Service

d. *How connection is provided (e.g., carrier-provided service; self-constructed; leased facility);*
Carrier-provided service

e. *Service and/or speed of connection (e.g., DS1, DS3, DSL, OC3, Metro Ethernet (10 Mbps));*
Bay Clinic Hilo Family Health – 2 T1 @ 1.544Mbps each
Bay Clinic Family Health Center - 1 T1 @ 1.544Mbps each
Bay Clinic Kau Family Health Center - 1 T1 @ 1.544Mbps each
Bay Clinic Keeau Family Health Center – 2 T1 @ 1.544Mbps each
Bay Clinic Pahoa Family health Center - 1 T1 @ 1.544Mbps each
Bay Clinic Pahoa Women's Health Center - 1 T1 @ 1.544Mbps each

e. *Gateway to NLR, Internet2, or the Public Internet (Yes/No);*
No
Federal Communications Commission FCC 07-19874

f. *Site Equipment (e.g., router, switch, SONET ADM, WDM), including manufacturer name and model number*;
Cisco 1921 Router, Cisco 2911 Router

h. Provide a logical diagram or map of the network;

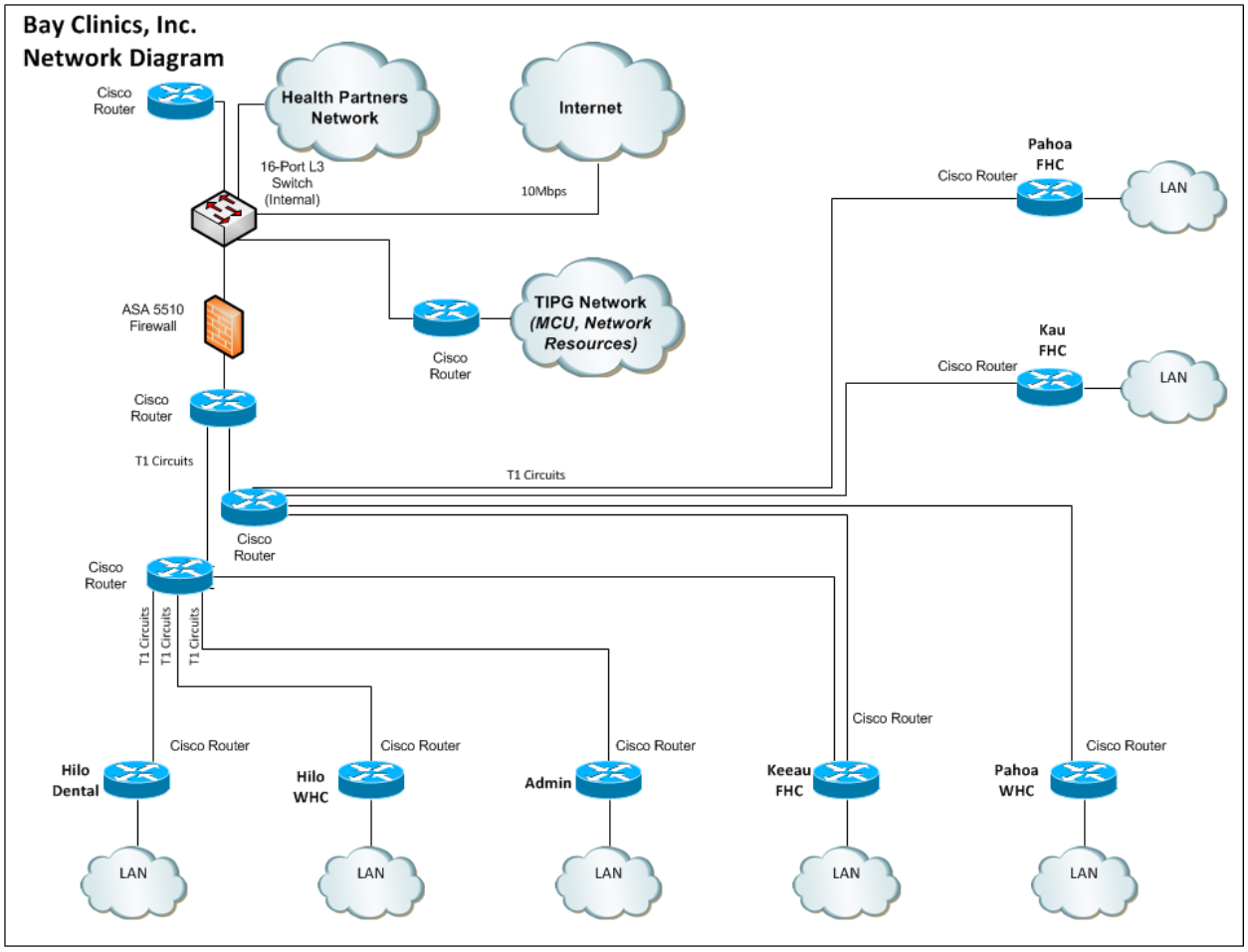

---

a. Health care provider site;

Public Safety Division

Halawa CCC – (2) T1 @ 1.455Mbps
Hale Nani – (1) T1 @ 1.455Mbps
Hawaii CCC – (1) T1 @ 1.455Mbps
Kauai CCC – (1) T1 @ 1.455Mbps
Oahu CCC – (2) T1 @ 1.455Mbps
Waiawa CCC – (1) T1 @ 1.455Mbps
Women's CCC – (1) T1 @ 1.455Mbps
PSD NOC – (2) DS3 @ 45Mbps

p. Eligible provider (Yes/No);

Yes

q. Type of network connection (e.g., fiber, copper, wireless);

Fiber
Leased Services

r. How connection is provided (e.g., carrier-provided service; self-constructed; leased facility);

No-cost leased facility

Leased Services

s. *Service and/or speed of connection (e.g., DS1, DS3, DSL, OC3, Metro Ethernet (10 Mbps);*

100Mbps Ethernet
T1s
DS3

t. *Gateway to NLR, Internet2, or the Public Internet (Yes/No);*

No
Federal Communications Commission FCC 07-19874

u. *Site Equipment (e.g., router, switch, SONET ADM, WDM), including manufacturer name and model number.*

Sorrento DWDM Equipment, Cisco 3925 Router

v. *Provide a logical diagram or map of the network.*

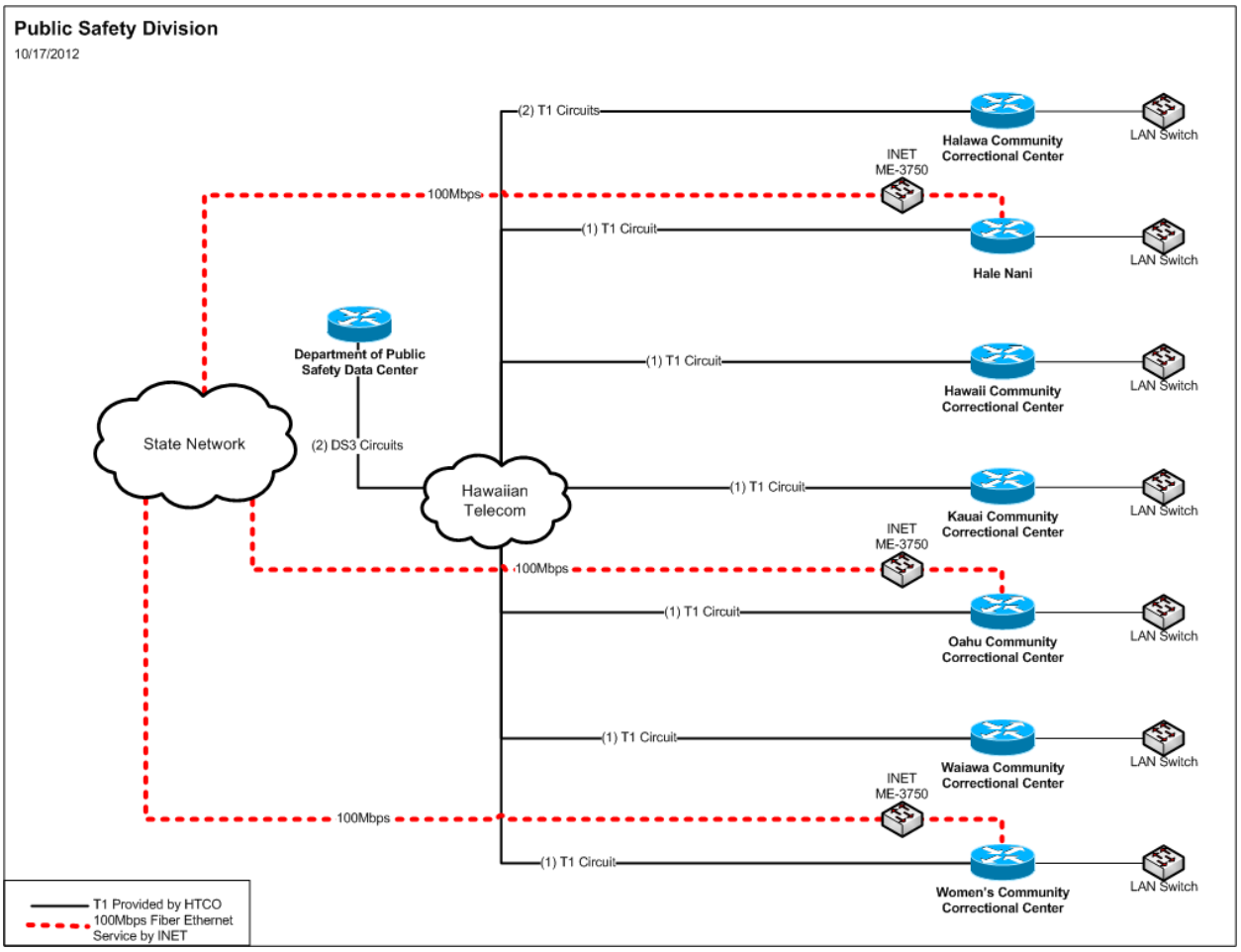

---

a. *Health care provider site;*

Kokua Kalihi Valley (KKV):

Charles Judd Community Health Center,
Elder Center
Kuhio Park Terrace Satellite Clinic
Kuhio Park Terrace Resource Center

Health and Wellness Center
Kalihi Valley Nature Park

b. *Eligible provider (Yes/No);*
Yes

c. *Type of network connection (e.g., fiber, copper, wireless);*
Leased carrier services

d. *How connection is provided (e.g., carrier-provided service; self-constructed; leased facility);*
Carrier-provided service

e. *Service and/or speed of connection (e.g., DS1, DS3, DSL, OC3, Metro Ethernet (10 Mbps);*
Kokua Kalihi Valley (KKV):
Charles Judd Community Health Center, - (2) T1 @ 1.544Mbps each
Elder Center – (1) T1 @ 1.544Mbps each
Kuhio Park Terrace Satellite Clinic – (1) T1 @ 1.544Mbps each
Kuhio Park Terrace Resource Center – (1) T1 @ 1.544Mbps each
Health and Wellness Center – (1) T1 @ 1.544Mbps each
Kalihi Valley Nature Park – (1) T1 @ 1.544Mbps each

f. *Gateway to NLR, Internet2, or the Public Internet (Yes/No);*
No
Federal Communications Commission FCC 07-19874

g. *Site Equipment (e.g., router, switch, SONET ADM, WDM), including manufacturer name and model number;*
CISCO ASR 1002 Router, Cisco ASR 1000 Router, Cisco Catalyst Metro Ethernet Switch, Sorrento SN-LXB11319 DWDM Switch.

h. *Provide a logical diagram or map of the network.*

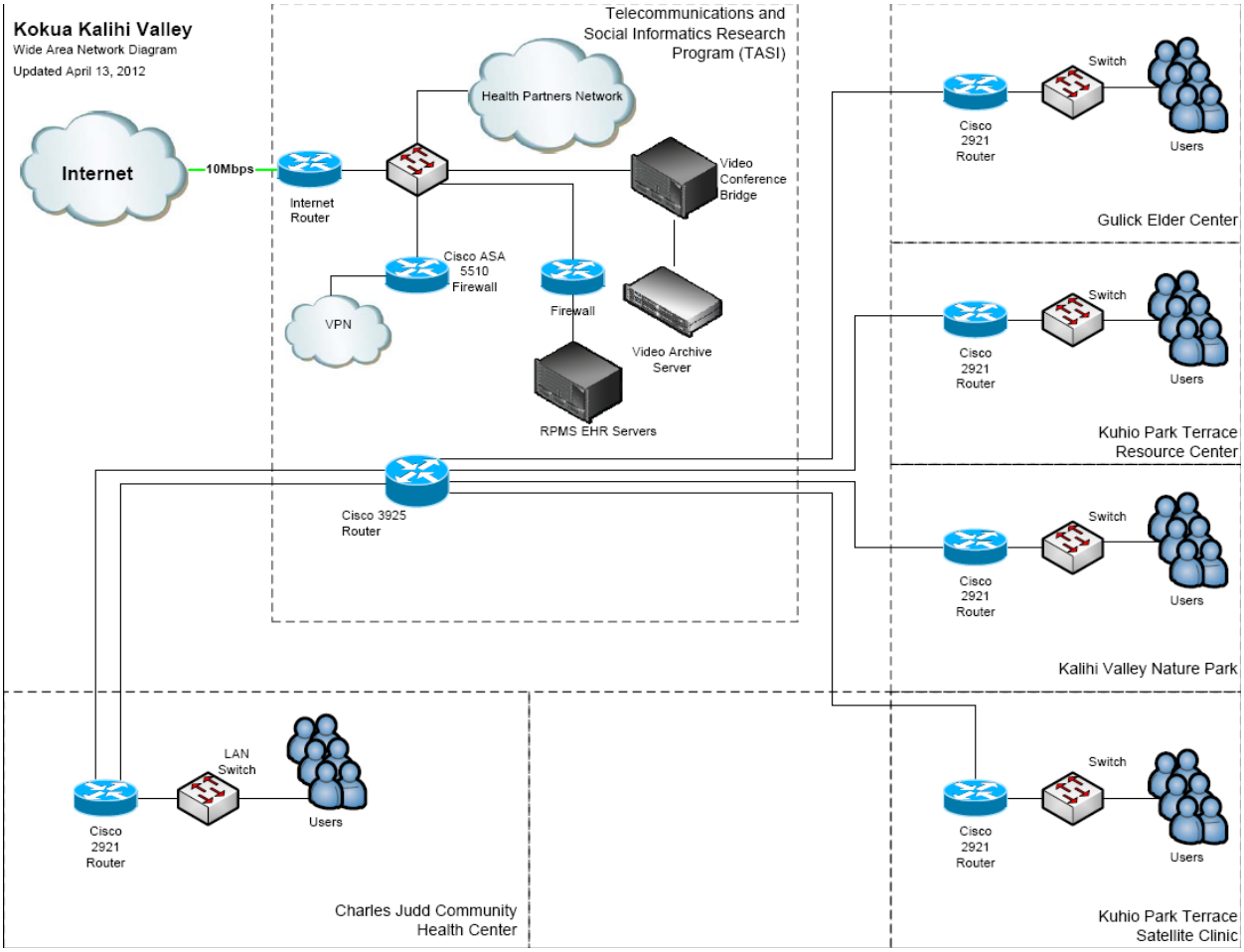

a. *Health care provider site;*
   Hui No Ke Ola Pono:
      Hana Maui

b. *Eligible provider (Yes/No);*
   Yes

c. *Type of network connection (e.g., fiber, copper, wireless);*
   Leased carrier services

d. *How connection is provided (e.g., carrier-provided service; self-constructed; leased facility);*
   Carrier-provided service

e. *Service and/or speed of connection (e.g., DS1, DS3, DSL, OC3, Metro Ethernet (10 Mbps);*
   Hui No Ke Ola Pono:
      Hana Maui – (1) T1 @ 1.544Mbps each

f. *Gateway to NLR, Internet2, or the Public Internet (Yes/No);*
   No
   Federal Communications Commission FCC 07-19874

g. *Site Equipment (e.g., router, switch, SONET ADM, WDM), including manufacturer name and model number;*

CISCO ASR 1002 Router, Cisco ASR 1000 Router, Cisco Catalyst Metro Ethernet Switch, Sorrento SN-LXB11319 DWDM Switch.

h. *Provide a logical diagram or map of the network.*

Hui No Ke Ola Pono

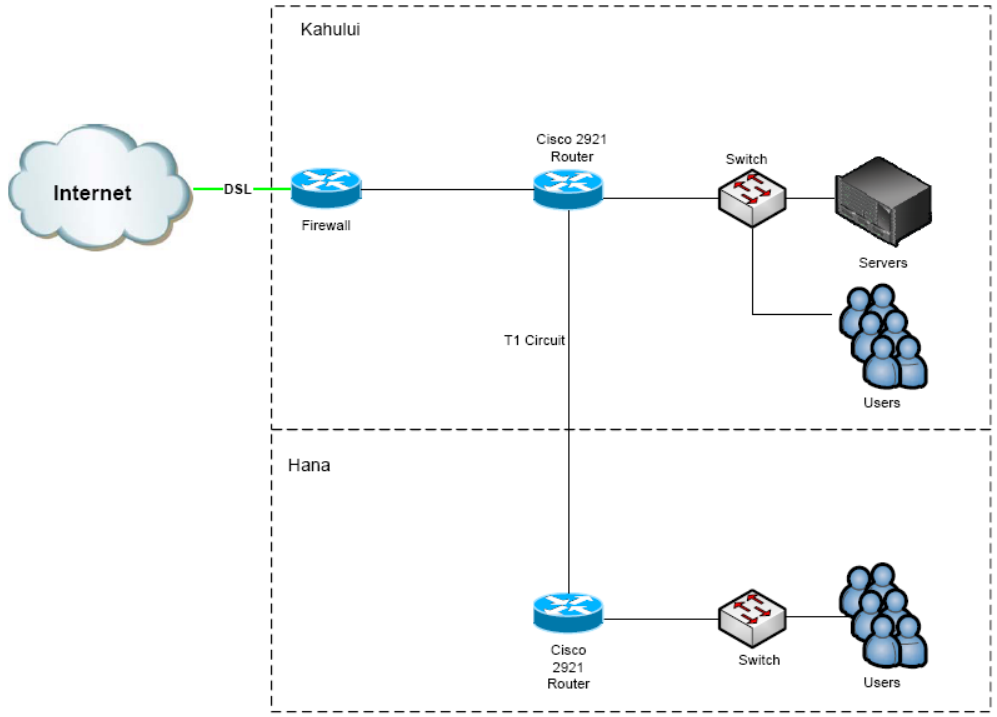

---

a. *Health care provider site;*

Hawaii State Department of Health:

- Diamond Head Health Center (DHHC)
- Kona Comm. Mental Health
- Lanakila Health Center
- Windward Health Center
- Kauai Comm. Mental Health
- Leeward Health Center
- Wailuku Health Center
- Hana Maui
- Hanapepe Health Center
- Hawaii Comm. Mental Health Center
- Honokaa Mental Health Center
- Honokaa Health Center
- Kalihi-Palama Family Guidance
- Hansens Hale Mohalu Hospital
- STD/AIDs
- STD/AID (728 Sunset)
- Kailua Family Guidance Center
- Kealakekua Health Office

Kapaa Health Center
Kohala Health Center
Molokai Health Center
Kona Health Center
Kona Health Center
DOH – Lanai Hospital
Kau Comm. Mental Health Center
Naalehu Health Center
Puna Comm. Mental Health Center
Wahiawa Community Mental Health Center
Ala Moana Health Center
Kinau Hale

b. *Eligible provider (Yes/No);*
Yes

c. *Type of network connection (e.g., fiber, copper, wireless);*
Leased carrier services

d. *How connection is provided (e.g., carrier-provided service; self-constructed; leased facility);*
Carrier-provided service

e. *Service and/or speed of connection (e.g., DS1, DS3, DSL, OC3, Metro Ethernet (10 Mbps);*
Hawaii State Department of Health:
DHHC – (1) 100Mbps
DHHC – (3) T1 @ 1.544Mbps each
Kona Comm. Mental Health – (3) T1 @ 1.544Mbps each
Lanakila Health Center - (2) T1 @ 1.544Mbps each
Windward Health Center - (2) T1 @ 1.544Mbps each
Kauai Comm. Mental Health - (2) T1 @ 1.544Mbps each
Leeward Health Center - (2) T1 @ 1.544Mbps each
Wailuku Health Center - (2) T1 @ 1.544Mbps each
Hana Maui - (1) T1 @ 1.544Mbps each
Hanapepe Health Center - (1) T1 @ 1.544Mbps each
Hawaii Comm. Mental Health Center - (1) T1 @ 1.544Mbps each
Honokaa Mental Health Center - (1) T1 @ 1.544Mbps each
Honokaa Health Center – (1) T1 @ 1.544Mbps each
Kalihi-Palama Family Guidance - (1) T1 @ 1.544Mbps each
Hansens Hale Mohalu Hospital - (1) T1 @ 1.544Mbps each
STD/AIDs - (1) T1 @ 1.544Mbps each
STD/AID (728 Sunset) - (1) T1 @ 1.544Mbps each
Kailua Family Guidance Center - (1) T1 @ 1.544Mbps each
Kealakekua Health Office - (1) T1 @ 1.544Mbps each
Kapaa Health Center - (1) T1 @ 1.544Mbps each
Kohala Health Center - (1) T1 @ 1.544Mbps each
Molokai Health Center - (1) T1 @ 1.544Mbps each
Kona Health Center - (1) T1 @ 1.544Mbps each
Kona Health Center - (1) T1 @ 1.544Mbps each
DOH – Lanai Hospital - (1) T1 @ 1.544Mbps each
Kau Comm. Mental Health Center - (1) T1 @ 1.544Mbps each
Naalehu Health Center - (1) T1 @ 1.544Mbps each
Puna Comm. Mental Health Center - (1) T1 @ 1.544Mbps each
Wahiawa Community Mental Health Center - (1) T1 @ 1.544Mbps each

Ala Moana Health Center - (1) T1 @ 1.544Mbps each
Kinau Hale - (2) DS3 @ 45Mbps each

f. *Gateway to NLR, Internet2, or the Public Internet (Yes/No);*
No
Federal Communications Commission FCC 07-19874

g. *Site Equipment (e.g., router, switch, SONET ADM, WDM), including manufacturer name and model number;*
CISCO ASR 1002 Router, Cisco ASR 1000 Router, Cisco Catalyst Metro Ethernet Switch, Sorrento SN-LXB11319 DWDM Switch.

h. *Provide a logical diagram or map of the network.*

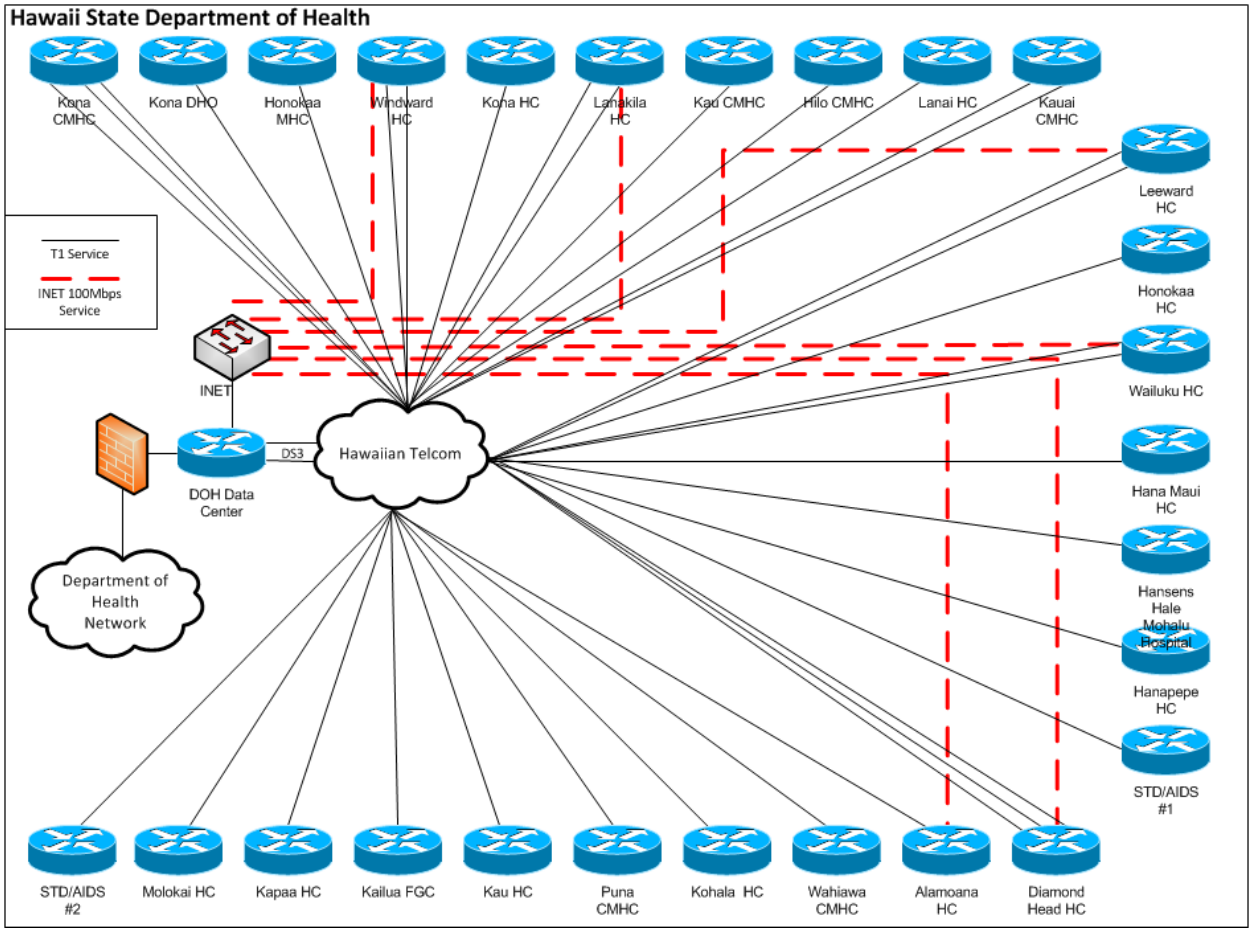

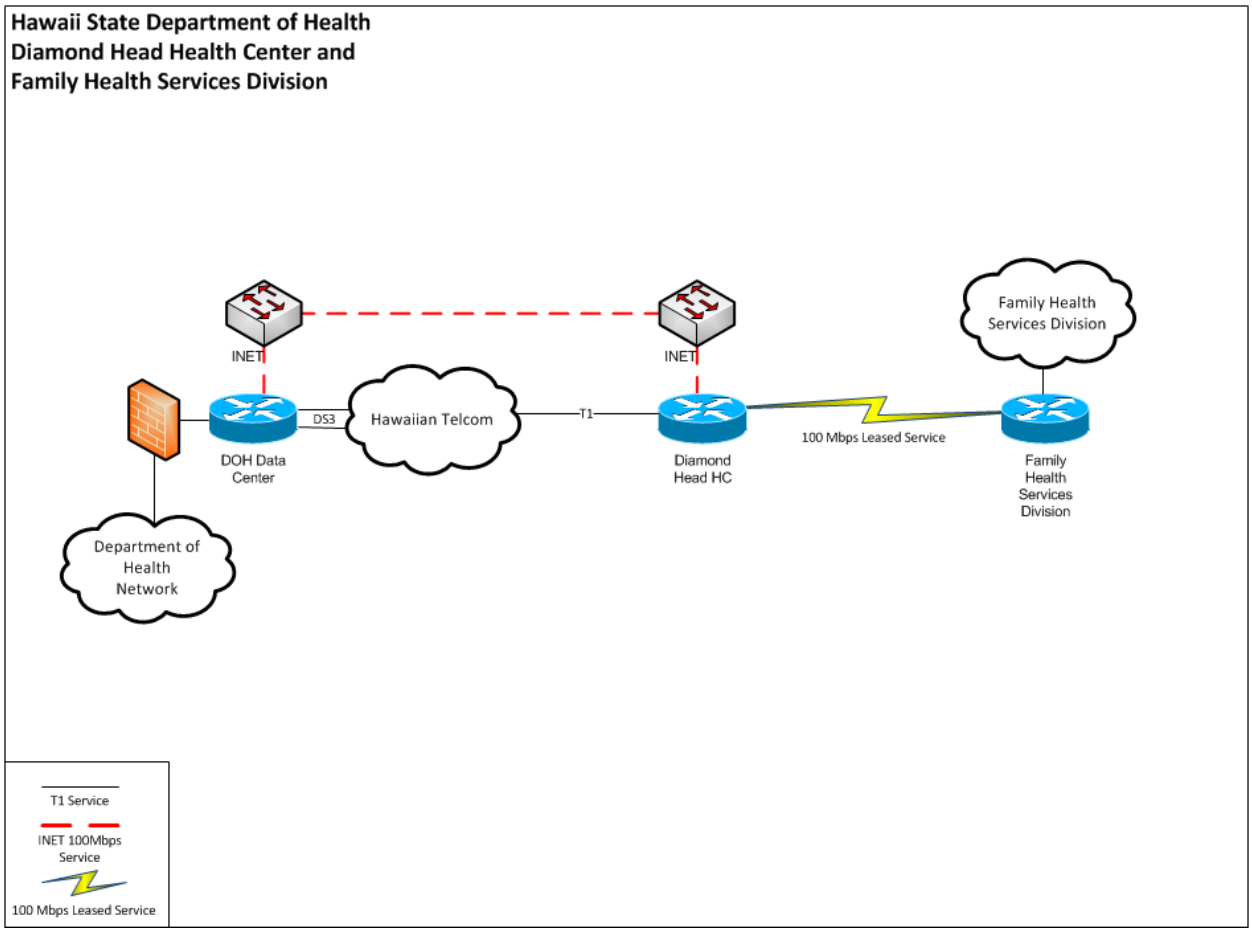

a. *Health care provider site;*
   Guam Memorial Hospital

b. *Eligible provider (Yes/No);*
   Yes

c. *Type of network connection (e.g., fiber, copper, wireless);*
   N/A

d. *How connection is provided (e.g., carrier-provided service; self-constructed; leased facility);*
   N/A

e. *Service and/or speed of connection (e.g., DS1, DS3, DSL, OC3, Metro Ethernet (10 Mbps);*
   N/A

f. *Gateway to NLR, Internet2, or the Public Internet (Yes/No);*
   No
   Federal Communications Commission FCC 07-19874

g. *Site Equipment (e.g., router, switch, SONET ADM, WDM), including manufacturer name and model number.*
   Network Switches, Routers and warranty

h. Provide a logical diagram or map of the network.
A network diagram will be provided in the next report.

---

a. Health care provider site;
Commonwealth Healthcare Corporation

b. *Eligible provider (Yes/No);*
Yes

c. *Type of network connection (e.g., fiber, copper, wireless);*
N/A

d. *How connection is provided (e.g., carrier-provided service; self-constructed; leased facility);*
N/A

e. Service and/or speed of connection (e.g., DS1, DS3, DSL, OC3, Metro Ethernet (10 Mbps);
N/A

f. Gateway to NLR, Internet2, or the Public Internet (Yes/No);
No
Federal Communications Commission FCC 07-19874

g. *Site Equipment (e.g., router, switch, SONET ADM, WDM), including manufacturer name and model number.*
Network Switches, Routers and warranty

h. Provide a logical diagram or map of the network.
A network diagram will be provided in the next report.

---

a. Health care provider site;
Guam Department of Health and Social Services

b. *Eligible provider (Yes/No);*
Yes

c. *Type of network connection (e.g., fiber, copper, wireless);*
N/A

d. *How connection is provided (e.g., carrier-provided service; self-constructed; leased facility);*
N/A

e. Service and/or speed of connection (e.g., DS1, DS3, DSL, OC3, Metro Ethernet (10 Mbps);
N/A

f. Gateway to NLR, Internet2, or the Public Internet (Yes/No);
No

g. *Site Equipment (e.g., router, switch, SONET ADM, WDM), including manufacturer name and model number.*
Network Switches, Routers and warranty

h. *Provide a logical diagram or map of the network.*
A network diagram will be provided in the next report.

---

5. Identify the following non-recurring and recurring costs, where applicable shown both as budgeted and actually incurred for the applicable quarter and funding year to-date.

a. *Network Design:*
Molokai General Hospital

b. *Network Equipment, including engineering and installation:*
Installation One Time Charge of $3,750.00

c. *Infrastructure Deployment/Outside Plant:*
NA

d. *Internet2, NLR, or Public Internet Connection:*
Point-to-Point Service

e. *Leased Facilities or Tariffed Services:*
Monthly Recurring Charge of $1,400.00

f. *Network Management, Maintenance, and Operation Costs (not captured elsewhere):*
NA

g. *Other Non-Recurring and Recurring Costs:*
NA

---

a. *Network Design:*
Physicians Center at Mililani

b. *Network Equipment, including engineering and installation:*
$9,518.68

c. *Infrastructure Deployment/Outside Plant:*
NA

d. *Internet2, NLR, or Public Internet Connection:*
Point-to-Point Service

e. *Leased Facilities or Tariffed Services:*
Monthly Recurring Charge of $437.94

f. *Network Management, Maintenance, and Operation Costs (not captured elsewhere):*
NA

g. Other Non-Recurring and Recurring Costs:
NA

---

a. Network Design:
Hawaii Health Systems Corporation (HHSC):
Leahi Hospital,
Maluhia Hosptial,
Kahuku Hospital,
Lanai Hospital,
Hale Hoola Hamakua,
Kohala Hospital,
West Kauai Medical Center,
Samuel Mahelona Memorial Hospital,
West Kauai Clinic – Kalaheo,
West Kauai Clinic – Port Allen,
Maui Memorial Medical Center,
Kula Hospital,
Kona Community Hospital,
Hilo Medical Center, and
Kau Hospital.

b. Network Equipment, including engineering and installation:
$547,785.62

c. Infrastructure Deployment/Outside Plant:
NA

d. Internet2, NLR, or Public Internet Connection:
Point-to-Point Service

e. Leased Facilities or Tariffed Services:
Monthly Recurring Charge of $11,622.84

f. Network Management, Maintenance, and Operation Costs (not captured elsewhere):
NA

g. Other Non-Recurring and Recurring Costs:
NA

---

h. Network Design:
Hui Malama Ola Na O'iwi:
Hui Malama Na O'iwi Admin & Health
Hui Malama Na O'iwi Hilo
Hui Malama Na O'iwi Kona
Hui Malama Na O'iwi Naalehu
Hui Malama Na O'iwi Pahoa
Hui Malama Na O'iwi Waimea

b. Network Equipment, including engineering and installation:
$41,004

c. Infrastructure Deployment/Outside Plant:
NA

d. Internet2, NLR, or Public Internet Connection:
Point-to-Point Service

e. Leased Facilities or Tariffed Services:
Monthly Recurring Charge of $4,739.53

g. Network Management, Maintenance, and Operation Costs (not captured elsewhere):
NA

h. Other Non-Recurring and Recurring Costs:
NA

---

a. Network Design:
Bay Clinic
- Bay Clinic Hilo Family Health
- Bay Clinic Family Health Center
- Bay Clinic Kau Family Health Center
- Bay Clinic Keeau Family Health Center
- Bay Clinic Pahoa Family health Cente
- Bay Clinic Pahoa Women's Health Center

b. Network Equipment, including engineering and installation:
$127,472.22

c. Infrastructure Deployment/Outside Plant:
NA

d. Internet2, NLR, or Public Internet Connection:
Point-to-Point Service

d. Leased Facilities or Tariffed Services:
Monthly Recurring Charge of $3811.19

e. Network Management, Maintenance, and Operation Costs (not captured elsewhere):
NA

f. Other Non-Recurring and Recurring Costs:
NA

---

a. Network Design:
Public Safety Division
- Halawa CCC
- Hale Nani
- Hawaii CCC
- Kauai CCC
- Oahu CCC
- Waiawa CCC
- Women's CCC
- PSD NOC

b. Network Equipment, including engineering and installation:
$350,497.69

c. *Infrastructure Deployment/Outside Plant:*
$555,000

d. *Internet2, NLR, or Public Internet Connection:*
Point-to-Point Service

e. *Leased Facilities or Tariffed Services:*
NA

f. *Network Management, Maintenance, and Operation Costs (not captured elsewhere):*
$31,434.17

g. *Other Non-Recurring and Recurring Costs:*
NA

---

a. *Network Design:*
Kokua Kalihi Valley (KKV):
Charles Judd Community Health Center,
Elder Center
Kuhio Park Terrace Satellite Clinic
Kuhio Park Terrace Resource Center
Health and Wellness Center
Kalihi Valley Nature Park

b. *Network Equipment, including engineering and installation:*
$42,402.06

c. *Infrastructure Deployment/Outside Plant:*
$26,444

d. *Internet2, NLR, or Public Internet Connection:*
Point-to-Point Service

d. *Leased Facilities or Tariffed Services:*
Monthly Recurring Charge of $2413.56

e. *Network Management, Maintenance, and Operation Costs (not captured elsewhere):*
NA

f. *Other Non-Recurring and Recurring Costs:*
NA

---

a. *Network Design:*
Hui No Ke Ola Pono:
Hana Maui

b. *Network Equipment, including engineering and installation:*
$14898.60

c. *Infrastructure Deployment/Outside Plant:*
NA

d. *Internet2, NLR, or Public Internet Connection:*

Point-to-Point Service

d. Leased Facilities or Tariffed Services:
Monthly Recurring Charge of $654.59

e. Network Management, Maintenance, and Operation Costs (not captured elsewhere):
NA

f. Other Non-Recurring and Recurring Costs:
NA

---

a. Network Design:
Hawaii State Department of Health
DHHC
Kona Comm. Mental Health
Lanakila Health Center
Windward Health Center
Kauai Comm. Mental Health
Leeward Health Center
Wailuku Health Center
Hana Maui
Hanapepe Health Center
Hawaii Comm. Mental Health Center
Honokaa Mental Health Center
Honokaa Health Center
Kalihi-Palama Family Guidance
Hansens Hale Mohalu Hospital
STD/AIDs
STD/AID (728 Sunset)
Kailua Family Guidance Center
Kealakekua Health Office
Kapaa Health Center
Kohala Health Center
Molokai Health Center
Kona Health Center
Kona Health Center
DOH – Lanai Hospital
Kau Comm. Mental Health Center
Naalehu Health Center
Puna Comm. Mental Health Center
Wahiawa Community Mental Health Center
Ala Moana Health Center
Kinau Hale

b. Network Equipment, including engineering and installation:
$366,185.47

c. Infrastructure Deployment/Outside Plant:
Institutional Network Fiber Connectivity - $180,000

d. Internet2, NLR, or Public Internet Connection:
Point-to-Point Service

e. Leased Facilities or Tariffed Services:

Monthly Recurring Charge of $16,377.94

f. *Network Management, Maintenance, and Operation Costs (not captured elsewhere):*
$1423.88

g. *Other Non-Recurring and Recurring Costs:*
NA

---

a. *Network Design:*
Guam Memorial Hospital Authority

b. *Network Equipment, including engineering and installation:*
Equipment Costs - $23,405.89

c. *Infrastructure Deployment/Outside Plant:*
NA

d. *Internet2, NLR, or Public Internet Connection:*
Network Equipment

e. *Leased Facilities or Tariffed Services:*
$0.00

f. *Network Management, Maintenance, and Operation Costs (not captured elsewhere):*
NA

g. *Other Non-Recurring and Recurring Costs:*
NA

---

a. *Network Design:*
Commonwealth Healthcare Corporation

b. *Network Equipment, including engineering and installation:*
Equipment Costs - $62,243.35

c. *Infrastructure Deployment/Outside Plant:*
NA

d. *Internet2, NLR, or Public Internet Connection:*
Network Equipment

e. *Leased Facilities or Tariffed Services:*
$0.00

f. *Network Management, Maintenance, and Operation Costs (not captured elsewhere):*
NA

g. *Other Non-Recurring and Recurring Costs:*
NA

---

a. Network Design:
Guam Department of Health and Social Services

b. Network Equipment, including engineering and installation:
Equipment Costs - $73,505.38

c. Infrastructure Deployment/Outside Plant:
NA

d. Internet2, NLR, or Public Internet Connection:
Network Equipment

e. Leased Facilities or Tariffed Services:
$0.00

f. Network Management, Maintenance, and Operation Costs (not captured elsewhere):
NA

g. Other Non-Recurring and Recurring Costs:
NA

---

6. Describe how costs have been apportioned and the sources of the funds to pay them:

a. Explain how costs are identified, allocated among, and apportioned to both eligible and ineligible network participants:

All network participants are eligible healthcare facilities. Costs will be identified and apportioned according to the specific links, bandwidth, equipment, and applications required at each site.

b. Describe the source of funds from:

i. Eligible Pilot Program network participants:

Each site has or will appropriate matching funds for their share of network communication costs. In many cases the source of funds for sites have already been budgeted for communication costs which will be modified based on the final design of this project. In anticipation of the Pilot Program many sites have included funding in their operating budget to accommodate implementation and/or maintenance of telecommunication capacity provided under the Pilot Program.

In addition, and in particular to the State agencies, initial discussions and planning has taken place for securing project matching funds and potentially leveraging the PBTDP project with the American Reinvestment and Recovery Act funds for broadband initiatives.

Other participants have obtained non-profit funding as matching.

ii. Ineligible Pilot Program network participants:

There are no ineligible participants in our project.

c. Show contributions from all other sources (e.g., local, state, and federal sources, and other grants):

i. Identify source of financial support and anticipated revenues that is paying for costs not covered by the fund and by Pilot Program participants:

The University of Hawaii, together with key project partners, sought and received a funding proposal to purchase high definition bridging equipment and video codecs. These are ineligible cost items under the Pilot program. The grant was received from:

Rural Utilities Service (RUS), U.S. Department of Agriculture

ii. Identify the respective amounts and remaining time for such assistance.

RUS Grant:

a. To purchase 17- HD Video Codecs and MCU
b. Total Project Amount - $590,447 (31% Local Match)
c. Grant Period – October 1, 2008 to November 3, 2011

d. Explain how the selected participant's minimum 15 percent contribution is helping to achieve both the selected participant's identified goals and objectives and the overarching goals of the Pilot Program:

The participants' contribution will aid in establishing the network infrastructure to achieve the identified goals of the Pilot Project.

7. Identify any technical or non-technical requirements or procedures necessary for ineligible entities to connect to the participant's network.

NA – There are no ineligible participants in our project.

8. Provide on update on the project management plan, detailing:

a. The project's current leadership and management structure and any changes to the management structure since the last data report;

There are no changes to report.

b. In the first quarterly report, the selected applicant should provide a detailed project plan and schedule. The schedule must provide a list of key project deliverables or tasks, and their anticipated completion dates. Among the deliverables, participants must indicate the dates when each health care provider site is expected to be connected to the network and operational. Subsequent quarterly reports should identify which project deliverables, scheduled for the previous quarter, were met, and which were not met. In the event a project deliverable is not achieved, or the work and deliverables deviate from the work plan, the selected participant must provide an explanation.

Majority of the anticipated project sites have been connected to the PBTD.

9. Provide detail on whether network is or will become self sustaining. Selected participants should provide an explanation of how network is self sustaining.

Network sustainability will be achieved in several ways. First, the PBTDP will build on the existing State Telehealth Access Network that has a well established partnering fee structure for administration, network support and operations. This is maintained through partnering agreements between the STAN HCP sites and the UH TIPG. The UH TIPG serves as the Network Operations Center (NOC) with seven-day a week operations and technical support. The UH TIPG NOC also manages the network and video teleconference scheduling, emergency and end-user support. It is anticipated that the PBTDP will follow a similar sustainability structure however the Project Team will work with the Advisory Committee to design the most appropriate and fair cost recovery mechanism for the PBTDP network members.

The sustainability plan also incorporates the anticipated internal HCP cost saving from the implementation of this project. For example, under this project some sites will connect to the State of Hawaii's Institutional Network that in turn will eliminate monthly recurring telecommunication network costs. Some of the funds that are made available through this cost saving may be reallocated to cover the partnering fees, network maintenance and upgrade. Other cost savings involve the participation in the regular Rural Health Care Program. Many sites are eligible for this program but are not currently participating. An analysis is currently being conducted for each HCP site to determine the potential cost savings through network reconfiguration and RHCP participation. Initial analysis indicate that we will be able to support an increased capacity at a lower cost to the participating HCP sites and enable the continued operation of the network. Further cost savings may be achieved with network expansion; the cost of the Network Operations Center support may be distributed among more HCPs possibly lowering the partnering fee for individual HCPs.

Finally the increased network capacity, higher number of participants, and availability of sites allow for the introduction of additional telemedicine services which will contribute to the revenue of participants further enabling the continuation of network services.

10. Provide detail on how the supported network has advanced telemedicine benefits:

> Critical support of applications that include patient clinical records, medical imagery transfers and storage for cardiology, radiology and neurology; patient records and financial records for psychiatric and human service counseling; the continuing medical, nursing, and health education and training, including Grand Rounds; and web based information resources for patients and the community.

a. Explain how the supported network has achieved the goals and objectives outlined in selected participant's Pilot Program application;

b. Explain how the supported network has brought the benefits of innovative telehealth and, in particular, telemedicine services to those areas of the country where the need for those benefits is most acute;

c. Explain how the supported network has allowed patients access to critically needed medical specialists in a variety of practices without leaving their homes or communities;

d. Explain how the supported network has allowed health care providers access to government research institutions, and/or academic, public, and private health care institutions that are repositories of medical expertise and information;

e. Explain how the supported network has allowed health care professional to monitor critically ill patients at multiple locations around the clock, provide access to advanced applications in continuing education and research, and/or enhanced the health care

community's ability to provide a rapid and coordinated response in the event of a national crisis.

11. Provide detail on how the supported network has complied with HHS health IT initiatives:

See Point 10 above.

a. Explain how the supported network has used health IT systems and products that meet interoperability standards recognized by the HHS Secretary;

b. Explain how the supported network has used health IT products certified by the Certification Commission for Healthcare Information Technology;

c. Explain how the supported network has supported the Nationwide Health Information Network (NHIN) architecture by coordinating activities with organizations performing NHIN trial implementations;

d. Explain how the supported network has used resources available at HHS's Agency for Healthcare Research and Quality (AHRQ) National Resource Center for Health Information Technology;

e. Explain how the selected participant has educated themselves concerning the Pandemic and All Hazards Preparedness Act and coordinated with the HHS Assistant Secretary for Public Response as a resource for telehealth inventory and for the implementation of other preparedness and response initiatives; and

f. Explain how the supported network has used resources available through HHS's Centers for Disease Control and Prevention (CDC) Public Health Information Network (PHIN) to facilitate interoperability with public health and emergency organizations.

12. Explain how the selected participants coordinated in the use of their health care networks with the Department of Health and Human Services (HHS) and, in particular, with its Centers for Disease Control and Prevention (CDC) in instances of national, regional, or local public health emergencies (e.g., pandemics, bioterrorism). In such instances, where feasible, explain how selected participants provided access to their supported networks to HHS, including CDC, and other public health officials.

Preliminary conversations have begun on leveraging existing networks and systems for public health surveillance and the establishment of communicable and non-communicable disease registries. More details will be available in the upcoming reporting periods.

Attachment 1
Pacific Broadband Telehealth Demonstration Project

Organization	Location name	Address	City	State	Zip
AS Medical Center	LBJ Tropical Medical Center	PO Box LBJ	Pago Pago	American Samoa	96799
Bay Clinics Inc	Hilo Family Health Center	1178 Kinoole Street	Hilo	Hawaii	96720
Bay Clinics Inc	Keeau Family Health Center	16-192 Pilimua street	Keaau	Hawaii	96749
Bay Clinics Inc	Pahoa Family Health Center	15-2866 Government Road	Pahoa	Hawaii	96778
Bay Clinics Inc	Kau Family Health Center	95-5583 Mamalahoa Road	Naalehu	Hawaii	96772
CNMI DPH	Commonwealth Health Center	PO Box 500-409	Saipan	MP	96950
DOH	Emergency Medical System Services Branch	3650 Maunalei Ave	Honolulu	Hawaii	96816
DOH	Wailuku Health Center	121 Mahalani Street	Wailuku	Hawaii	96793
DOH	Molokai Health Center	65 Makaena Street	Kaunakakai	Hawaii	96748
DOH	Waiakea Complex	1582 Kamehameha Ave	Hilo	Hawaii	96720
DOH	Leeward Health Center	860 Fourth Ave	Pearl City	Hawaii	96782
DOH	Windward Health Center	45-691 Keaahala Road	Kaneohe	Hawaii	96744
DOH	FHSD Office	741A Sunset Ave	Honolulu	Hawaii	96816
DOH	Leeward Annex	870 Fourth Street	Pearl City	Hawaii	96782
DOH	Case Management Service Branch	88 Kanoelehua Ave	Hilo	Hawaii	96720
DOH	Hawaii County Community Mental Health Center	37 Kekaulike Street	Hilo	Hawaii	96720
DOH	Hansens	3650 Maunalei Ave	Honolulu	Hawaii	96816
DOH	Waimea Health Center	67-5189 Kamamalu Street	Kamuela	Hawaii	96743
DOH	Kailua Family Guidance Center	42-477 Kalanianaole Hwy	Kailua	Hawaii	96734
DOH	Honokaa Mental Health Center	45-3380 Mamane Street	Honokaa	Hawaii	96727
DOH	Puna Community Mental Health Center	15-2866 Government Main Road	Pahoa	Hawaii	96788
DOH	Kauai Community Mental Health Center	3-3212 Kuhio Highway	Lihue	Hawaii	96766
DOH	Hana Maui	5101 Uakea Road	Hana	Hawaii	96713
DOH	Lanai Hospital	628 7th Ave	Lanai City	Hawaii	96763
DOH	Wahiawa Community Mental Health Center	910 California Ave	Wahiawa	Hawaii	96786
DOH	Maui Family Guidance Center	270 Waiehu Beach	Wailuku	Hawaii	96793
DOH	Kona Community Mental Health Center	79-1020 Haukapila Road	Kealakekua	Hawaii	96750
DOH	Kalihi-Palama Family Guidance Center	2045 Kam IV Road	Honolulu	Hawaii	96819
DOH	FHSD Early Intervention System	1350 S King Street	Honolulu	Hawaii	96813
DOH	Hi County Community Mental Health Center	136 Kinoole Street	Hilo	Hawaii	96720
DOH	Waimea Family Guidance Center	65-1230 Mamalahoa Hwy	Kamuela	Hawaii	96743
DOH	Kona District Health Office	81-980 Halekii	Kailua-Kona	Hawaii	96740
DOH	BT CMIS DDD Office	210 Imi Kala drive	Wailuku	Hawaii	96793
DOH	STD/AIDS	3675 Kilauea Ave	Honolulu	Hawaii	96816
DOH	STD/AIDS	728 Sunset Ave	Honolulu	Hawaii	96816
DOH	Kapaa Health Center	4491 Kou Street	Kapaa	Hawaii	96746

Attachment 1
Pacific Broadband Telehealth Demonstration Project

Organization	Location name	Address	City	State	Zip
DOH	Hanapepe Health Center	11-3756 Kaumualii Hwy	Hanapepe	Hawaii	96716
DOH	Kau Health Center	95-5669 Mamalahoa Hwy	Naalehu	Hawaii	96772
DOH	Kohala Health Center	54-3900 Akone Pule hwy	Kapaau	Hawaii	96755
DOH	Honokaa Health Center	45-3380 Mamane Street	Honokaa	Hawaii	96727
DOH	Kinau Hale	1250 Punchbowl Street	Honolulu	Hawaii	96813
DOH	Lanakila Health Center	1700 Lanikila Ave	Honolulu	Hawaii	96817
DOH	Diamond Head Health Center	3627 Kilauea Ave	Honolulu	Hawaii	96816
DOH	Hawaii State Hospital	45-710 Keaahala Road	Kaneohe	Hawaii	96744
DOH	State Laboratory Facility	2725 Waimano Home Road	Pearl City	Hawaii	96782
DOH	DDD Case Management Office	801 Dillingham Blvd	Honolulu	Hawaii	96817
DOH	Ala Moana Health Center	591 Ala Moana	Honolulu	Hawaii	96813
DOH	Waimano DDD Service Branch	2201 Waimano Home Road	Pearl City	Hawaii	96782
DOH	Kona Health Center	79-1015 Haukapila Street	Kealakekua	Hawaii	96750
DOH	Kau Community Mental Health Center	219-B Kaaliki Road	Naalehu	Hawaii	96772
GMHA	GMHA	850 Gov. Carlos Camacho Rd	Tamunig	Guam	96913
GMHA	GMHA Skilled Nursing Unit	499 North Sabana Dr	Barrigada	Guam	96921
HHSC	Hilo Medical Center	1190 Waianuenue Ave	Hilo	Hawaii	96720
HHSC	Hale Hoola Hamakua	45-547 Plumeria Street	Honokaa	Hawaii	96727
HHSC	Kau Hospital	1 Kamani Street	Pahala	Hawaii	96777
HHSC	Kauai Veterans Memorial Hospital	4643 Waimea Canyon Road	Waimea	Hawaii	96796
HHSC	Samuel Mahelona Memorial Hospital	4800 Kawaihau Road	Kapaa	Hawaii	96746
HHSC	West Kauai Clinic - Waimea	4643-B Waimea Canyon Dr	Waimea	Hawaii	96796
HHSC	West Kauai Clinic - Port Allen	4353 Waialo Road	Eleele	Hawaii	96705
HHSC	West Kauai Clinic - Kalaheo	4489 Papalina Road	Kalaheo	Hawaii	96741
HHSC	Maui Memorial Medical Center	221 Mahalani Street	Wailuku	Hawaii	96793
HHSC	Kula Hospital	204 Kula Hwy	Kula	Hawaii	96793
HHSC	Lanai Community Hospital	628 Seventh Street	Lanai City	Hawaii	96763
HHSC	Maluhia Hospital	1027 Hala Drive	Honolulu	Hawaii	96817
HHSC	Leahi Hospital	3675 Kilauea Ave	Honolulu	Hawaii	96816
HHSC	Kahuku Hospital	54-117 Pualalea Street	Kahuku	Hawaii	96731
HHSC	Kohala Hospital	54-383 Hospital Road	Kapaau	Hawaii	96755
HHSC	Kona Community Hospital	79-1019 Haukapila Street	Kealakekua	Hawaii	96750
Hoola Lahui Hawaii	Kauai Community Health Center - Waimea	4643-B Waimea Canyon drive	Waimea	Hawaii	96796
Hoola Lahui Hawaii	Kauai Community Health Center - Kapaa	4800-D Kawaihau Road	Kapaa	Hawaii	96746
HPH	Hawaii Pacific Health	55 Merchant Street	Honolulu	Hawaii	96813
Hui Malama Ola Na Oiwi	Hui Malama Ola Na Oiwi: Primary Care Clinic	45 Mohouli Street	Hilo	Hawaii	96720

Attachment 1
Pacific Broadband Telehealth Demonstration Project

Organization	Location name	Address	City	State	Zip
Hui Malama Ola Na Oiwi	Hui Malama Ola Na Oiwi: Hilo	69 Railroad Ave	Hilo	Hawaii	96720
Hui Malama Ola Na Oiwi	Hui Malama Ola Na Oiwi: Pahoa	15-2874 Old Pahoa Rd	Pahoa	Hawaii	96778
Hui Malama Ola Na Oiwi	Hui Malama Ola Na Oiwi: Naalehu	25 Mamalahoa Hwy A	Naalehu	Hawaii	96772
Hui Malama Ola Na Oiwi	Hui Malama Ola Na Oiwi: Waimea	64-1035 Mamalahoa Hwy	Kamuela	Hawaii	96743
Hui Malama Ola Na Oiwi	Hui Malama Ola Na Oiwi: Kona	82-6127 Mamalahoa Hwy	Captain Cook	Hawaii	96740
JABSOM Family Practice	Physicans Center at Mililani	95-390 Kuahelani Ave	Mililani	Hawaii	96789
JABSOM Family Practice	UH Family Medicine Center at Hilo	45 Mohouli Street	Hilo	Hawaii	96720
JABSOM Family Practice	Department of Medicine/Native Hawaiian Health/Family Medicine & Community Health, Gold Bond Building	677 Ala Moana Blvd	Honolulu	Hawaii	96813
JABSOM Family Practice	Department of Geriatric Medicine, Kuakini Hospital	347 North Kuakini St	Honolulu	Hawaii	96817
JABSOM Family Practice	Department of OBGYN/Pediatric Medicine, Kapiolani	1319 Punahou St	Honolulu	Hawaii	96826
JABSOM Family Practice	University Tower, Queens Medical Center	1356 Lusitana St	Honolulu	Hawaii	96816
Koolauloa	Koolauloa Health and Wellness Center - Kahuku Clinic	56-119 Kamehameha Hwy	Kahuku	Hawaii	96731
Koolauloa	Koolauloa Health and Wellness Center - Hauula Clinic	54-316 Kamehameha Hwy	Hauula	Hawaii	96717
NHCH	North Hawaii Community Hospital	67-1125 Mamalahoa Hwy	Kamuela	Hawaii	96743
PSD	Hawaii Community Correctional Center	60 Punahele Street	Hilo	Hawaii	96720
PSD	Kulani Community Correctional Center	HC 01 Stainback Hwy	Hilo	Hawaii	96720
PSD	Maui Community Correctional Center	600 Waiale Drive	Wailuku	Hawaii	96793
PSD	Kauai Community Correctional Center	5350 Kuhio Hwy	Lihue	Hawaii	96766
PSD	Oahu Community Correctional Center	2199 Kamehameha Hwy	Honolulu	Hawaii	96819
PSD	Halawa Community Correctional Center	99-902 Moanalua Rd	Aiea	Hawaii	96701
PSD	Womens Community Correctional Center	42-477 Kalanianaole Hwy	Kailua	Hawaii	96734
PSD	Waiawa Community Correctional Center	94-560 Kamehameha Hwy	Waipahu	Hawaii	96797
PSD	Hale Nani	3200 Kanoelehua Ave	Hilo	Hawaii	96720
UOG	University of Guam	House 6	Mangilao	Guam	96923
VA PIHS	VA Pacific Island Health Care System	459 Paterson Road	Honolulu	Hawaii	96819
VA PIHS	American Samoa Community Based Outpatient Clinic	Fiatele Teo Army Reserve Bldg	Pago Pago	AS	96799
VA PIHS	Guam Community Based Outpatient Clinic	US Naval Hospital	Agana Heights	Guam	96919
Bay Clinics Inc	Bay Clinic Family Health Center	95-5583 Mamalahoa Highway	Naalehu	Hawaii	96772

Attachment 1
Pacific Broadband Telehealth Demonstration Project

Organization	Location name	Address	City	State	Zip
Bay Clinics Inc	Pahoa Women's Health Center	15-2866 Pahoa Village Road, Bldg F, Ste. A	Pahoa	Hawaii	96778
Hui No Ke Ola Pono, Inc.	Hui No Ke Ola Pono, Inc.	95 Mahalani St., Rm 21	Wailuku	Hawaii	96793
Hui No Ke Ola Pono, Inc.	Hui No Ke Ola Pono, Inc. (Hana Community Center)	5101 Uakea Place	Hana	Hawaii	96713
Kokua Kalihi Valley	CHARLES JUDD COMMUNITY HEALTH CENTER	2239 NORTH SCHOOL STREET	HONOLULU	Hawaii	96819
Kokua Kalihi Valley	ELDER CENTER	1846 GULICK AVENUE	HONOLULU	Hawaii	96819
Kokua Kalihi Valley	KUHIO PARK TERRACE SATELLITE CLINIC	1475 LINAPUNI STREET	HONOLULU	Hawaii	96819
Kokua Kalihi Valley	KUHIO PARK TERRACE RESOURCE CENTER	1485 LINAPUNI STREET	HONOLULU	Hawaii	96819
Kokua Kalihi Valley	HEALTH AND WELLNESS CENTER	2229 NORTH SCHOOL ST	HONOLULU	Hawaii	96819
Kokua Kalihi Valley	KALIHI VALLEY NATURE PARK	3659 KALIHI STREET	HONOLULU	Hawaii	96819