- In-band blocking (36.521 7.6.1)

Back

Minimum conformance requirements

Table 7.6.1.3-1: In band blocking parameters

Rx Parameter	Units	Channel bandwidth					
		1.4 MHz	3. MHz	5. MHz	10. MHz	15. MHz	20. MHz
Wanted signal mean power	dBm	REFSENS + channel bandwidth specific value below					
		6	6	6	6	7	9
$BW_{Interferer}$	MHz	1.4	3	5	5	5	5
$F_{Ioffset, case 1}$	MHz	2.1+0.0125	4.5+0.0075	7.5+0.0125	7.5+0.0025	7.5+0.0075	7.5+0.0125
$F_{Ioffset, case 2}$	MHz	3.5+0.0075	7.5+0.0075	12.5+0.0075	12.5+0.0125	12.5+0.0025	12.5+0.0075

NOTE 1: The transmitter shall be set to 4dB below the supported maximum output power.
NOTE 2: The interferer consists of the Reference measurement channel specified in Annex A.3.2 with one sided dynamic OCNG Pattern OP.1 FDD/TDD as described in Annex A.5.1.1/A.5.2.1 and set-up

Table 7.6.1.5-2: In-band blocking

E-UTRA band	Parameter	Unit	Case 1	Case 2	Case 3	Case 4
	$P_{Interferer}$	dBm	-56	-44	-30	[-30]
	$F_{Interferer}$ (offset)	MHz	=-BW/2 – $F_{Ioffset,case 1}$ & =+BW/2 + $F_{Ioffset,case 1}$	≤-BW/2 – $F_{Ioffset,case 2}$ & ≥+BW/2 + $F_{Ioffset,case 2}$	-BW/2 – 15 & -BW/2 – 9	-BW/2 – 10
1, 2, 3, 4, 5, 6, 7, 8, 9, 10, 11, 13, 14, 18, 19, 20, 21, 22, 23, 25,33, 34, 35, 36, 37, 38, 39, 40, 41	$F_{Interferer}$	MHz	(Note 2)	F_{DL_low} – 15 to F_{DL_high} + 15		
12	$F_{Interferer}$	MHz	(Note 2)	F_{DL_low} – 10 to F_{DL_high} + 15		F_{DL_low} – 10
17	$F_{Interferer}$	MHz	(Note 2)	F_{DL_low} – 9 to F_{DL_high} + 15	F_{DL_low} – 15 and F_{DL_low} – 9	

Note 1: For certain bands, the unwanted modulated interfering signal may not fall inside the UE receive band, but within the first 15 MHz below or above the UE receive band
Note 2: For each carrier frequency the requirement is valid for two frequencies:
a. the carrier frequency -BW/2 - $F_{Ioffset, case 1}$ and
b. the carrier frequency +BW/2 + $F_{Ioffset, case 1}$
Note 3: $F_{Interferer}$ range values for unwanted modulated interfering signal are interferer centre frequencies
Note 4: Case 3 and Case 4 only apply to assigned UE channel bandwidth of 5 MHz

To calculate for In-band blocking easily

Band	17	CH B.W	5	Select B.W
		$F_{Ioffset, case 1}$	7.5125	
		$F_{Ioffset, case 2}$	12.5075	

	Lower frequency	Upper frequency	$P_{Interferer}$
Band DL	734. MHz	746. MHz	
Band Center	740. MHz		
Receive band wanted signal	**735. MHz**	**745. MHz**	
Interferer case 1	729.9875 MHz	750.0125 MHz	-56 dBm
Interferer case 2 (inner frequency)	724.9925 MHz	755.0075 MHz	-44 dBm
Interferer case 2 (outer frequency)	**728.9875 MHz**	**751.0125 MHz**	
Outer limit for inband blocking	719. MHz	761. MHz	
Number of test frequencies case 2	1	2	
Case3	725 MHz	719 MHz	-30 dBm
Case4			-30 dBm

Measurement Results

1. Test Configuration

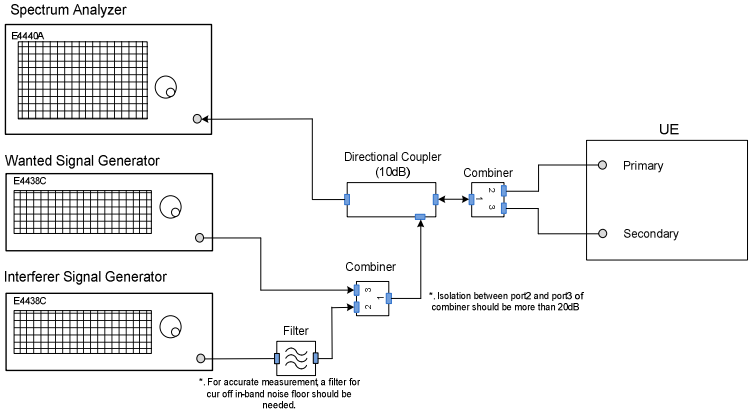

Tunable Notch Filter : 5TNF-00055, K&L Microwave

2. Results

Initial Conditions	
Test Environment as specified in TS 36.508[7] subclause 4.1	NC
Test Frequencies as specified in TS36.508 [7] subclause 4.3.1	Mid range
Test Channel Bandwidths as specified in TS 36.508 [7] subclause 4.3.1	Lowest, 5MHz, Highest

		Test Configuration							Test Requirements	Test Result		Remark
			Downlink Configuration			Uplink Configuration				F_{center}		
		Ch BW	Mod'n	RB allocation		Mod'n	RB allocation			Lower	Upper	
				FDD	TDD		FDD	TDD	dBm	dB	dB	
	Case 1	1.4 MHz	QPSK	6	6	QPSK	6	6	-96.2	-112.8	-112.4	
		3. MHz	QPSK	15	15	QPSK	15	15	-93.2	-109.2	-109.2	
		5. MHz	QPSK	25	25	QPSK	25	25	-91.0	-107.4	-107.4	
		5. MHz	QPSK	25	N/A	QPSK	20	N/A	-91.0	-107.4	-107.4	
		5. MHz	QPSK	25	N/A	QPSK	15	N/A	-91.0	-107.4	-107.4	
		10. MHz	QPSK	50	50	QPSK	50	50	-88.0	-104.6	-104.6	
		10. MHz	QPSK	50	N/A	QPSK	25	N/A	-88.0	-104.8	-104.6	
		10. MHz	QPSK	50	N/A	QPSK	20	N/A	-88.0	-104.8	-104.8	
		10. MHz	QPSK	50	N/A	QPSK	15	N/A	-88.0	-104.6	-104.8	
		15. MHz	QPSK	75	75	QPSK	75	75				
		15. MHz	QPSK	75	N/A	QPSK	50	N/A				
		15. MHz	QPSK	75	N/A	QPSK	25	N/A				
		15. MHz	QPSK	75	N/A	QPSK	20	N/A				
		20. MHz	QPSK	100	100	QPSK	100	100				
		20. MHz	QPSK	100	N/A	QPSK	75	N/A				
		20. MHz	QPSK	100	N/A	QPSK	50	N/A				
		20. MHz	QPSK	100	N/A	QPSK	25	N/A				
		20. MHz	QPSK	100	N/A	QPSK	20	N/A				
		1.4 MHz	QPSK	6	6	QPSK	6	6	-96.2	-107.8	-107.6	
		3. MHz	QPSK	15	15	QPSK	15	15	-93.2	-106.8	-106.4	
		5. MHz	QPSK	25	25	QPSK	25	25	-91.0	-104.6	-104.4	
		5. MHz	QPSK	25	N/A	QPSK	20	N/A	-91.0	-104.6	-104.4	
		5. MHz	QPSK	25	N/A	QPSK	15	N/A	-91.0	-104.6	-104.4	
		10. MHz	QPSK	50	50	QPSK	50	50	-88.0	-101.8	-101.6	
		10. MHz	QPSK	50	N/A	QPSK	25	N/A	-88.0	-102.0	-101.8	

In-band blocking	Case 2	10. MHz	QPSK	50	N/A	QPSK	20	N/A	-88.0	-102.0	-101.8	
		10. MHz	QPSK	50	N/A	QPSK	15	N/A	-88.0	-102.0	-101.8	
		15. MHz	QPSK	75	75	QPSK	75	75				
		15. MHz	QPSK	75	N/A	QPSK	50	N/A				
		15. MHz	QPSK	75	N/A	QPSK	25	N/A				
		15. MHz	QPSK	75	N/A	QPSK	20	N/A				
		20. MHz	QPSK	100	100	QPSK	100	100				
		20. MHz	QPSK	100	N/A	QPSK	75	N/A				
		20. MHz	QPSK	100	N/A	QPSK	50	N/A				
		20. MHz	QPSK	100	N/A	QPSK	25	N/A				
		20. MHz	QPSK	100	N/A	QPSK	20	N/A				
	Case 3	1.4 MHz	QPSK	6	6	QPSK	6	6	-96.2			
		3. MHz	QPSK	15	15	QPSK	15	15	-93.2			
		5. MHz	QPSK	25	25	QPSK	25	25	-91.0	-94.8	-105.7	Lower : FDL_low - 9MHz Higher : FDL_low - 15MHz
		5. MHz	QPSK	25	N/A	QPSK	20	N/A	-91.0	-94.8	-105.7	
		5. MHz	QPSK	25	N/A	QPSK	15	N/A	-91.0	-94.9	-105.8	
		10. MHz	QPSK	50	50	QPSK	50	50	-88.0			
		10. MHz	QPSK	50	N/A	QPSK	25	N/A	-88.0			
		10. MHz	QPSK	50	N/A	QPSK	20	N/A	-88.0			
		10. MHz	QPSK	50	N/A	QPSK	15	N/A	-88.0			
		15. MHz	QPSK	75	75	QPSK	75	75				
		15. MHz	QPSK	75	N/A	QPSK	50	N/A				
		15. MHz	QPSK	75	N/A	QPSK	25	N/A				
		15. MHz	QPSK	75	N/A	QPSK	20	N/A				
		20. MHz	QPSK	100	100	QPSK	100	100				
		20. MHz	QPSK	100	N/A	QPSK	75	N/A				
		20. MHz	QPSK	100	N/A	QPSK	50	N/A				
		20. MHz	QPSK	100	N/A	QPSK	25	N/A				
		20. MHz	QPSK	100	N/A	QPSK	20	N/A				
	Case 4	1.4 MHz	QPSK	6	6	QPSK	6	6	-96.2			
		3. MHz	QPSK	15	15	QPSK	15	15	-93.2			
		5. MHz	QPSK	25	25	QPSK	25	25	-91.0			
		5. MHz	QPSK	25	N/A	QPSK	20	N/A	-91.0			
		5. MHz	QPSK	25	N/A	QPSK	15	N/A	-91.0			
		10. MHz	QPSK	50	50	QPSK	50	50	-88.0			
		10. MHz	QPSK	50	N/A	QPSK	25	N/A	-88.0			
		10. MHz	QPSK	50	N/A	QPSK	20	N/A	-88.0			
		10. MHz	QPSK	50	N/A	QPSK	15	N/A	-88.0			
		15. MHz	QPSK	75	75	QPSK	75	75				
		15. MHz	QPSK	75	N/A	QPSK	50	N/A				
		15. MHz	QPSK	75	N/A	QPSK	25	N/A				
		15. MHz	QPSK	75	N/A	QPSK	20	N/A				
		20. MHz	QPSK	100	100	QPSK	100	100				
		20. MHz	QPSK	100	N/A	QPSK	75	N/A				
		20. MHz	QPSK	100	N/A	QPSK	50	N/A				
		20. MHz	QPSK	100	N/A	QPSK	25	N/A				
		20. MHz	QPSK	100	N/A	QPSK	20	N/A				