APPENDIX B

ASSESSMENT OF UNLICENSED-NATIONAL INFORMATION INFRASTRUCTURE DEVICE DEPLOYMENT AND TECHNICAL PARAMETERS

INTRODUCTION

To determine the necessary Dynamic Frequency Selection (DFS) detection thresholds, NTIA developed a computer model that calculated the aggregate interference level into a radar system from a deployment of Unlicensed-National Information Infrastructure (U-NII) devices.[105] The computer model took into account the deployment and technical parameters associated with U-NII devices and performed link budget calculations to determine the effect of U-NII devices employing the DFS sharing technology and the aggregate level of U-NII device signals that would be received by the radar systems.

This appendix provides an assessment of the U-NII device deployment and technical parameters for use in evaluating the risks to federal systems operating in the 5350-5470 MHz and 5850-5925 MHz bands. This assessment compares the U-NII device deployment and technical parameters used in the development of the existing FCC U-NII regulations with those inputs to this study provided by industry representing current and projected usage in the 5 GHz frequency bands authorized for U-NII devices.

U-NII DEPLOYMENT TECHNICAL AND OPERATIONAL PARAMETERS USED IN DEVELOPING EXISTING REGULATIONS

The analysis used to develop the existing U-NII regulations, distributed U-NII devices over three regions: urban, suburban, and rural. The urban region reflected the corporate and public access use of U-NII devices. The suburban region reflected corporate, public access, and home U-NII device use. The rural region reflected only home U-NII device use. The analysis method assumed that the three regions exist within concentric circles as shown in Figure B-1.

[105] NTIA Technical Memorandum TM-09-461.

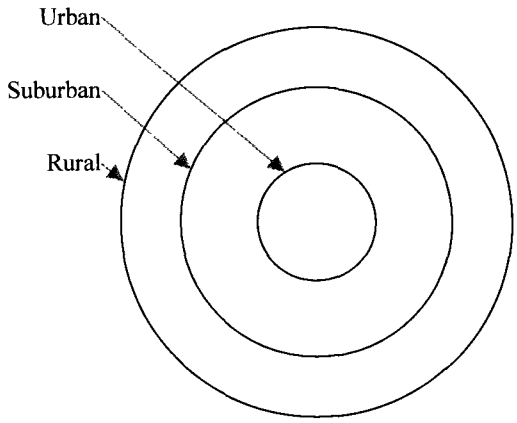

Figure B-1. U-NII Device Deployment Regions

NTIA utilized three concentric rings to define the U-NII device deployment as shown in Table B-1. Uniform distribution of devices in each zone was utilized throughout each volumetric zone including height.

Table B-1. U-NII Device Deployment Parameters

Deployment Parameter	Urban zone	Suburban zone	Rural zone
Radius from the Center (km)	0-4	4-12	12-25
U-NII Device (%)	60	30	10
Building Height (m)	30	6	6

A total of 2,753 U-NII devices operating on a co-channel basis with a radar system at a given moment were utilized. All of the U-NII devices considered in the analysis were assumed to have a radio frequency (RF) channel bandwidth of 20 MHz.

The U-NII device power distribution in Table B-2 was utilized.

Table B-2. U-NII Device Power Distribution

Power Level	1 W	200 mW	100 mW	50 mW
U-NII Device (%)	5	25	40	30

The U-NII antenna pattern in the azimuth orientations is omnidirectional. The U-NII device elevation antenna pattern is described in Table B-3.

Table B-3. U-NII Device Elevation Antenna Pattern

Elevation Angle θ (Degrees)	Gain (dBi)
$45 < \theta \leq 90$	–4
$35 < \theta \leq 45$	–3
$0 < \theta \leq 35$	0
$-15 < \theta \leq 0$	–1
$-30 < \theta \leq -15$	–4
$-60 < \theta \leq -30$	–6
$-90 < \theta \leq -60$	–5

In order for most devices to radiate with 1 Watt equivalent isotropically radiated power (EIRP), an antenna gain of 6 dBi will typically be required. The following antenna pattern from Recommendation ITU-R F.1336 was used:[106]

$$G(\theta) = \max[G_1(\theta), G_2(\theta)]$$

$$G_1(\theta) = G_0 - 12\left(\frac{\theta}{\theta_3}\right)^2$$

$$G_2(\theta) = G_0 - 12 + 10\log\left[\left(\max\left\{\frac{|\theta|}{\theta_3}, 1\right\}\right)^{-1.5} + k\right]$$

$$\theta_3 = 107.6 \times 10^{-0.1G_0}$$

where:

$G(\theta)$: antenna gain (dBi)

θ: elevation angle (degrees)

$k = 0.5$

$G_0 = 6$ dBi.

The methodology used to determine the probability of a radar signal being detected during the DFS device channel sensing time based on the radar parameters and the U-NII data transmissions is described in Annex 4 of Recommendation ITU-R M.1652.[107]

---

[106] Recommendation ITU-R F.1336, *Reference Radiation Patterns of Omnidirectional and Other Antennas in Point-to-Multipoint Systems for Use in Sharing Studies* (1997).

[107] Recommendation ITU-R M.1652, *Dynamic Frequency Selection (DFS) in Wireless Access Systems Including Radio Local Area Networks for the Purpose of Protecting the Radiodetermination Service in the 5 GHz Band* (2003).

RECOMMENDATIONS FOR TECHNICAL AND DEPLOYMENT PARAMETERS OF U-NII DEVICES OPERATING IN THE 5350-5470 MHz AND 5850-5925 MHz BANDS

NTIA sought initial input from a group of industry representatives from companies that are interested in expanding unlicensed use of the 5 GHz band in support of IEEE 802.11ac related to the deployment and technical parameters to be used in assessing the potential interference to federal systems if U-NII devices that would be operating in the 5350-5470 MHz and 5850-5925 MHz bands.[108]

U-NII Device Deployment Parameters

The following subsections provide the methodology used by industry to determine the total number of U-NII device transmitters to be considered in the analysis.[109]

Determine population size. From ITU-R Recommendation F.1509, the radius of the total deployment zone is a function of total population as follows:[110]

$$r_R = \alpha P^{\beta} \qquad \text{B-1}$$

where:

r_R: Radius of the equivalent circular area containing the total population P;

P: Total population;

α, β: Empirical factors, $\alpha = 0.035$ and $\beta = 0.44$.

NTIA defined the radius of the total deployment zone as 25 km. Solving for the total population results in:

$$P = \exp\left(\frac{\ln\left(r_R/\alpha\right)}{\beta}\right) \qquad \text{B-2}$$

Total population based on Equation B-2 is approximately 3 million.

Population split between environments. Based on latest available information, the wireless industry representatives selected the population split as given in Table B-3. The resulting population in each region is 919,000 in urban, 1.5 million in suburban, and 612,000 in rural. Within

[108] Letter from Mary L. Brown, Director, Government Affairs, Cisco Systems, Inc. to Karl Nebbia, Associate Administrator, Office of Spectrum Management, NTIA (Sept. 26, 2012).

[109] For U-NII devices employing multiple-input and multiple-output (MIMO) techniques, the analysis should evaluate total EIRP summed over all antennas.

[110] Recommendation ITU-R F.1509, *Technical and operational requirements that facilitate sharing between point-to-multipoint systems in the fixed service and the inter-satellite service in the band 25.25-27.5 GHz* (2001).

each region, the type of deployments is split into corporate, public access, and residential. The RLAN aggregation model defines the places where RLANs transmit.

Table B-3. Population Distribution

Environment	Population (%) (P_E)	Population (%) (P_D)
Urban	30	
Corporate		35
Public Access		15
Residential		50
Suburban	50	
Corporate		35
Public Access		15
Residential		50
Rural	20	
Residential		100

The premise of corporate deployments is the corporate System Factor and corporate Activity Rate reflects that the RLANs and their transmissions are managed to meet work requirements, not for watching YouTube. The corporate population is the percent of population using Wi-Fi in corporate locations.

The premise of public access deployments is the System Factor and Activity Rate reflect that the RLAN access points (AP) are older, there are more active users per AP, and the streaming content comes from less expensive wired Internet connection, not a gigabit Internet connection. The public access population is the percent of population using Wi-Fi not at home and not in a corporate location.

The premise of residential deployments is the small System Factor and Activity Rate reflect that the RLAN APs are older, there are few people in the residence, and the streaming content comes from a relatively less expensive wired connection compared to corporate Internet connections. RLANs used for work-from-home and student homework in the residential population are included.

Market penetration of 5 GHz. Market penetration indicates the percentage of the population that use wireless access systems (WAS). Furthermore, the majority of current Wi-Fi usage is in 2.4 GHz, especially in public access. New use cases will likely increase the market adoption of 5 GHz technology. However, a significant percentage of WAS traffic will remain at 2.4 GHz. Therefore, market penetration in Table B-4 is the percentage of population that use WAS in 5 GHz.

Table B-4. 5 GHz Market Penetration

Environment	Market Penetration of 5 GHz (%) (M)
Corporate	80
Public Access	30
Residential	50

System factor. Multiple people will be covered by a single AP in a basic service set (BSS). In addition, each person has multiple devices, *e.g.*, laptop, smart phone. Only one device or the AP will be transmitting at a given instant. The system factor parameter determines the ratio of the user's devices to an access point. As seen in Table B-5, residential has a much smaller system factor to account for peer-to-peer connections in the home.

Table B-5. System Factor

Environment	System Factor (S)
Corporate	20
Public Access	25
Residential	5

Activity Rate. Consumers need larger bandwidth and higher data rates to support fast file transfer and video. However, over a large geographic area, it is highly unlikely that every BSS will simultaneously be engaging in these applications. Furthermore, public access systems are limited by their backhaul, reducing the aggregate access to the Internet. For example, while an 802.11ac AP may support 1 gigabits per second traffic within a local coffee shop, its 10 megabits per second Internet connection will significantly limit the over-the-air activity to 1 percent. Industry modeled residential activity at 5 percent because they expect the UNII device data rates to increase as affordable broadband access speeds increase. Table B-6 provides predicted activity rates.

Table B-6. Predicted Activity Rates

Environment	Activity Rate (%) (A)
Corporate	15
Public Access	5
Residential	5

Computation of active users. The number of active users (U) in each region is computed by Equation B-3.

$$U = P \cdot P_E \cdot P_D \cdot M \cdot \frac{1}{S} \cdot A \qquad \text{B-3}$$

The total number of active users in the geographic area is summed over the entire region. This is illustrated in Table B-7, with a total of 14,553 active users.[111]

Table B-7. Computation of Active Users

	Radius (km)	Population Type Split (%)	Population	WAS Users = pop(market penetration)	BSS per region = (WAS users)/(system factor)	Total Active WAS users per region = (BSS per region)(active rate)
Urban	4		918742 7			
	Corporate	35	321559 9	257248	12862 4	1929 4
	Public	15	137811 4	41343 4	1653 7	82 7
	Residential	50	459371	229686	45937	2297
Suburban	12		1531237 8			
	Corporate	35	535933 2	428746 6	21437 3	3215 6
	Public	15	229685 7	68905 7	2756 2	137 8
	Residential	50	765618 9	382809 5	76561 9	3828 1
Rural	25		612495 1			
	Residential	100	612495 1	306247 6	61249 5	3062 5
Total						14,553

Distribution of active users over 5 GHz channels. If interference from adjacent channels is included in the sharing analysis with federal systems, it is necessary to populate the prospective active users across all of the available 5 GHz channels to capture the adjacent channel interference. Figure B-2 illustrates the IEEE 802.11ac channels in currently authorized and available U-NII and

[111] The industry input contained an error in the residential population for the urban residential region. The number provided by industry was 160,780. The correct number is 459,371. This changes the number of total active users from 13,060 to 14,553.

unlicensed bands along with the potential new channels (shown in red) that could result if 5350-5470 MHz and 5850-5925 MHz bands are made available.[112]

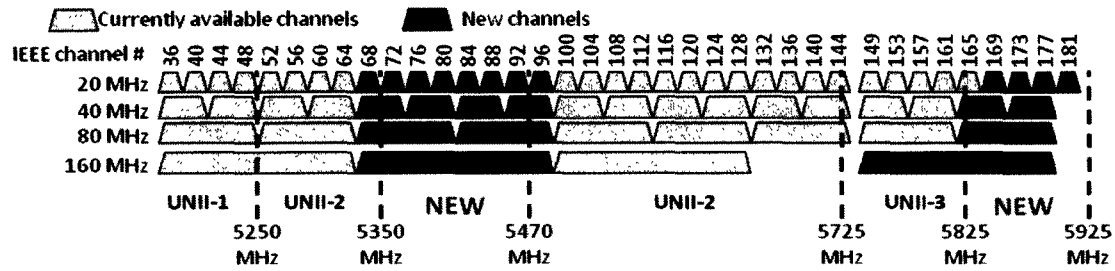

UNII-1: 5150-5250 MHz band

UNII-2: 5250-5350 MHz and 5470-5725 MHz band

UNII-3: 5725-5825 MHz band

Figure B-2. Distribution over 5 GHz Channels

It would be assumed that active users are uniformly distributed across all of the currently available channels and new channels 68-96 and 169-181. For each active user, the channel bandwidth would be based on the distribution in Table B-10 and a channel number would be selected with a uniform distribution from the available channels shown in Figure B-2.

Three Concentric Rings to Define the U-NII Device Deployment

The metro device distribution of 50 percent suburban population and 20 percent rural population matches U.S. metro populations reported by the U.S. Census Bureau.[113] Within each zone, nearly 10 percent of U-NII devices are operated outdoors near ground level, including operation in vehicles, or are co-located on street lighting and strand mounts above streets. A very small fraction of all U-NII devices are operated outdoors on rooftops or towers in point-to-multipoint or bridging configurations. The fraction of all U-NII devices is lower in the urban zone because there is much more fiber and microwave to buildings or near buildings than in the rural zone.

[112] This figure was presented in https://mentor.ieee.org/802.11/dcn/12/11-12-1159-03-00ai-masers-slaves-and-clients.pptx.

[113] United States Census Bureau publication http://www.census.gov/prod/2002pubs/censr-4.pdf, at 33. Furthermore, http://www.census.gov/geo/www/ua/2010urbanruralclass.html and http://www.fhwa.dot.gov/planning/census_issues/archives/metropolitan_planning/cps2k.cfm also report 20 percent rural population, and http://www.pbs.org/fmc/book/1population6.htm reports 50 percent suburban population.

Table B-8. U-NII Device Distribution

U-NII Device Distribution Parameters	Urban Zone	Suburban Zone	Rural Zone
Radius from the Center	0-4 km	4-12 km	12-25 km
U-NII Device Percentage (Indoor Operation)	27%	45%	18%
U-NII Indoor Maximum Height	30 m	6 m	6 m
U-NII Device Percentage (Outdoor Ground Clutter; less than 12 m)	2.9%	4.8%	1.7%
U-NII Device Percentage (Outdoor Operation; outdoor bridging)	0.1%	0.2%	0.3%
Outdoor Point-to-Multipoint bridging: Maximum Building/ Antenna Height	100 m	30 m	30 m

U-NII Device Technical Parameters

The U-NII device EIRP levels are provided in Table B-9.

Table B-9. U-NII EIRP Distribution – EIRP when operating

U-NII EIRP Level	1 W	200 mW	80 mW	50 mW	25 mW
U-NII Device Percentage (Indoor Operation)	0%	16.9%	50.6%	13.4%	9.1%
U-NII Device Percentage (Outdoor Ground Clutter; less than 12m)	0%	1.7%	5.3%	1.4%	1%
U-NII Device Percentage (Outdoor Operation; outdoor bridging)	0.6%	0%	0%	0%	0%
The EIRP in this table reflects what the actual transmit powers are likely to be, and that these in many cases will be below maximum power allowed based on adjusting the transmit power for capacity versus coverage. TPC therefore does not need to be separately modeled for the purposes of the analysis.					

The EIRP levels and percentages in Table B-9 are derived from: 1) predictions of shipped devices for various devices classes; 2) expected EIRP of the device classes; 3) matching the percentages from the sum of the rows in Table B-8 to Table B-9; and 4) traffic mix in a Basic Service Set between Access Point and client.

The industry representatives have suggested that the ITU-R model (as used in the current NTIA aggregate interference simulation) gives a good approximation to typical antenna patterns and they recommend continuing to use ITU-R model.

The U-NII device bandwidths are contained Table B-10.

Table B-10. U-NII Device Bandwidth Distribution (Projected Bandwidth)

U-NII Transmitter Bandwidth	20 MHz	40 MHz	80 MHz	160 MHz 80 MHz and 80 MHz (non-contiguous)
Percentage of U-NII Devices	10%	25%	50%	15%

The percentages in Table B-10 are based on experience from the transition from 20 MHz to 40 MHz channels in 802.11n.

The representative emission spectra for U-NII device bandwidths of: 20 MHz, 40 MHz, 80 MHz, and 160 MHz (80 MHz and 80 MHz non-contiguous) are provided in Table B-11.

Table B-11. Representative Emission Spectra for U-NII Devices

Frequency Offset From RF Chanel Center Frequency (MHz)	Emission Level (dBr)
± BW/2-1	0
± BW/2+1	-20
± BW	-28
± 3/2*BW	-45
± 2*BW	-52
Transmit emission mask for 20/40/80/160 MHz BW operation.	

The emission levels at BW/2-1, BW/2+1, and BW are quoted from IEEE 802.11ac D2.0. The emission levels for 3/2*BW and 2*BW were determined by measurements from "Revision of Part III of U-NII to TDWR EMC Report."[114] These were further confirmed by several manufacturers as a reasonable representation of the emissions of IEEE 802.11ac devices.

Recommendation ITU-R M.1652 Annex 4 describes the methodology used to determine the probability of a radar signal being detected during the DFS device channel sensing time based on the radar parameters and the U-NII data transmissions. This methodology did not take into consideration the higher data rates envisioned by the IEEE 802.11ac standard. The industry group recommended a revision for *Step 3* in ITU-R M.1652 Annex 4, to generalize the method to cover all possible frame sizes that are allowed by recent IEEE 802.11 amendments. The revision is described below:

[114] NTIA Case Study Part III at 8 and 9.

Revised Step 3: Create a waveform to represent WAS transmit time and listening periods using the values in Table B-12a, B-12b, B-12c, and B-12d. Table B-12a shows the Enhanced Distributed Channel Access (EDCA) categories. The chance of each access category occurring is shown the second column. For each access category a transmit opportunity (TXOP) phase is assumed where a station may transmit as many PHY-layer packets, up to the defined duration of the TXOP. Figure B-3 shows an example of PHY-layer packets exchanges in a TXOP. When a TXOP finishes, stations that want to access a channel need to go through contention procedures that would create quiet periods with random durations. The quiet periods for each access category are shown in the third column of Table B-12a. The default TXOP durations for each access category, according to IEEE 802.11ac specification, are shown in the fourth column. Note that for access categories BE and BK no default value is recommended in the specification. Instead a single PHY-layer packet is transmitted, whose duration is obtained from Table B-12b, B-12c, and B-12d for each of the allowed bandwidths. The PHY-layer packet duration in Table B-12b, B-12c, and B-12d is an aggregation of several MAC-layer packets where each MAC-layer packet has a single TCP packet of size 1,500 bytes plus associated MAC-layer overhead.

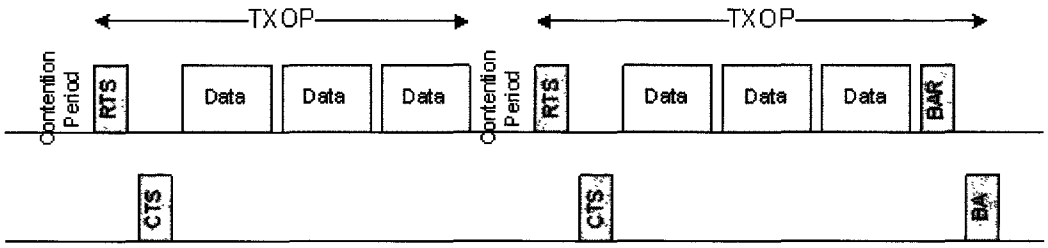

Figure B-3.[115]

In a TXOP, the station that owns the TXOP may send several PHY-layer packets to one or more stations and might seek a response, such as acknowledgment, from each station.

The WAS transmit waveform for each instance of a WAS packet transmission is created by randomly choosing an access category according to the distribution in the second column of Table B-12a. First a quiet period starts that is required by the WAS network to facilitate sharing of the access medium (*i.e.* the WAS channel) by the multiple devices using the network. This quiet period is available for in-service monitoring. The quiet period is chosen according to the third column of Table B-12a. Then single or multiple PHY-layer packet exchanges are followed. The duration of TXOP for access categories VO and VI are given in the fourth column of Table B-12a. For access categories BE and BK, a single PHY-layer packet, with duration given in Table B-12b, B-12c, and B-12d, is transmitted, where a duration is drawn uniformly from the table with appropriate bandwidth. Then another access category is chosen randomly in the same manner as the first, starting with another quiet period following with PHY-layer packet exchanges. This is repeated until the

[115] This figure is reproduced with permission from Perahia, E. and Stacey, R., "Next Generation Wireless LANs: Throughput, Robustness, and Reliability in 802.11n," Cambridge University Press (2008).

waveform has the same duration as that of a WAS device in the main beam of the antenna, as calculated in Step 1.

Table B-12a: EDCA access categories and associated quiet periods (combined IFS and defer time)

EDCA Access Category	Access Category Probability	Quiet Period (us) U(Y) is uniform distribution for integers 1 to Y	11ac Default TXOP duration (us)
Voice (VO)	0.1	AIFS[VO]+Backoff = 34 + U(15) x 9	1,504
Video (VI)	0.5	AIFS[VI]+Backoff = 34 + U(31) x 9	3,008
Best effort (BE)	0.2	AIFS[BE]+Backoff = 43 + U(1023) x 9	See Note
Background (BK)	0.2	AIFS[BK]+Backoff = 79 + U(1023) x 9	See Note

Note: For BE and BK access categories, one PHY-layer packet transmission is assumed after the associated quiet period. The PHY-layer packet duration is obtained from Table B-12b, B-12c, or B-12d.

Table B-12b: PPDU duration in microsecond, for bandwidth 20 MHz, and 1/2/3 spatial streams (SS)

PPDU Duration (us)	MCS =0	MCS =1	MCS =2	MCS =3	MCS =4	MCS =5	MCS =6	MCS =7	MCS =8	MCS =9
SS=1, BW=20MHz	5,228	4,364	2,924	2,204	1,484	1,124	1,004	908	764	692
SS=2, BW=20MHz	4,368	2,208	1,488	1,128	768	588	528	480	408	372
SS=3, BW=20MHz	2,936	1,496	1,016	776	536	416	376	344	296	272

Note: TCP packets = 1,500 bytes. Aggregated MAC-layer packets =8,191 bytes. PHY-layer packet duration limit=5,484 us (max allowed in 802.11ac).

Table B-12c: PPDU duration in microsecond, for bandwidth 40 MHz, and 1/2/3 spatial streams (SS)

PPDU Duration (us)	MCS =0	MCS =1	MCS =2	MCS =3	MCS =4	MCS =5	MCS =6	MCS =7	MCS =8	MCS =9
SS=1, BW=40MHz	4,204	2,124	1,432	1,084	736	564	508	460	392	356
SS=2, BW=40MHz	2,128	1,088	740	568	396	308	280	256	224	204
SS=3, BW=40MHz	1,444	748	520	404	288	232	208	196	172	160

Note: TCP packets=1,500 bytes. Aggregated MAC-layer packets =8,191 bytes. PHY-layer packet duration limit=5,484 us (max allowed in 802.11ac).

Table B-12d: PPDU duration in microsecond, for bandwidth 80 MHz, and 1/2/3 spatial streams (SS)

PPDU Duration (us)	MCS =0	MCS =1	MCS =2	MCS =3	MCS =4	MCS =5	MCS =6	MCS =7	MCS =8	MCS =9
SS=1, BW=80MHz	1,964	1,004	684	524	364	284	256	236	204	188
SS=2, BW=80MHz	1,008	528	368	288	208	168	152	144	128	120
SS=3, BW=80MHz	696	376	268	216	160	136	124	120	108	104

Note: TCP packets=1,500 bytes. Aggregated MAC-layer packets =8,191 bytes. PHY-layer packet duration limit=5,484 us (max allowed in 802.11ac).

ASSESSMENT OF U-NII DEVICE DEPLOYMENT AND TECHNICAL PARAMETERS

Assessment of U-NII Device Deployment Parameters

The U-NII device deployment parameters that can potentially impact examining sharing with federal systems are the total number of U-NII devices and the distribution of U-NII devices.

In developing the existing FCC U-NII regulations, NTIA considered a total of 2,753 active U-NII devices in the sharing analysis. Taking into account factors such as population, 5 GHz market penetration, number of users per system, and activity rate, industry estimated there will be a total of 14,553 active 5 GHz U-NII devices. Although the number of active U-NII devices has increased by a factor of approximately six, this does not necessarily mean that the aggregate interference to federal systems will dramatically increase. If the DFS sharing technology is implemented properly, U-NII devices operating on the same RF channel as a federal system would detect the presence of a signal and change to another channel, turn off completely, or move to another frequency band (*e.g.*, 2.4 GHz). However, because the number of U-NII devices has increased, it could take longer for U-NII devices to move from an occupied channel, increasing the

duration of interference to federal systems. With the increased number of U-NII devices, it is not possible to determine whether the DFS detection thresholds in the existing FCC U-NII regulations are adequate to reduce the magnitude and duration of the aggregate interference to federal systems. It will be necessary to perform additional computer modeling to determine whether the existing U-NII regulations are adequate to reduce the magnitude and duration of the potential aggregate interference to an acceptable level where sharing is possible with federal systems.

The U-NII device distributions used in the development of the existing DFS regulations and those provided by wireless industry representatives are shown in Table B-1 and Table B-7, respectively. In comparing the distributions of U-NII devices in the three zones (urban, suburban, and rural), industry is projecting lower U-NII device usage in the urban zone at 27 percent, as compared to the 60 percent used in the development of the DFS regulations. Industry is also projecting 15 percent higher U-NII device usage in the suburban zone. From an analytical perspective, the building/antenna heights and the amount of building attenuation are the parameters that will vary in the different zones defining U-NII device distribution. The computer model assumes that radio propagation loss and any additional losses due to building attenuation would be reciprocal. That is, any reduction in the signal strength from a radar to a U-NII device used for detection of an occupied RF channel would be the same when determining the signal strength from a U-NII device to a radar used in the calculation of interference. For a single U-NII device to radar interaction this relationship can be easily determined. However, when considering aggregate interference to federal systems, the proposed change will impact 10,478 U-NII device-to-radar interactions (72 percent of the 14,553 active U-NII devices). The density of U-NII devices is one of the key parameters in determining the amount of potential interference to the incumbent federal systems. It will be critical to establish a realistic U-NII device density before conducting the detailed technical analysis to accurately assess the impact of expanding access to the 5350-5470 MHz and 5850-5925 MHz bands. The impact of the changes in U-NII distributions on the DFS regulations that affect sharing with federal systems can only be evaluated through additional computer modeling.

Assessment of U-NII Device Technical Parameters

The U-NII device technical parameters that can potentially impact examining sharing with federal systems are the distribution of EIRP levels, distribution of RF channel bandwidths, and changes to the methodology used in detecting a radar signal.

The distribution of power levels considered in developing the existing U-NII regulations is shown in Table B-2. The distribution of EIRP levels provided by wireless industry representatives is shown in Table B-8. In order to convert the power levels in Table B-2 to EIRP levels, a 0 dBi antenna gain needs to be added to the values shown in Table B-2. As shown in Table B-2, 70 percent of the U-NII devices had an EIRP of 100 mW (20 dBm) or less. The industry input suggests that 73 percent of the U-NII devices have an EIRP of 80 mW (19 dBm) or less. In general, there is good agreement between the distribution of EIRP levels used in developing the U-NII regulations and those being suggested by industry.

The analysis performed to develop the existing U-NII regulations considered a single RF channel bandwidth of 20 MHz and assumed all of the 2,753 U-NII devices were operating co-channel with the radar system. The 20 MHz RF channel bandwidth was consistent with the IEEE 802.11h standard. With development of the IEEE 802.11n and IEEE 802.11ac standards, the channel bandwidths have increased to 40 MHz, 80 MHz, and 160 MHz as shown in Figure B-2. The wider RF channel bandwidths introduce new issues that could impact sharing with federal systems. In developing the existing U-NII regulations, the analysis model developed by NTIA assumed that when a U-NII device detected a radar signal, it moved off of that channel and far enough away in frequency so that it no longer contributed to the aggregate interference. However, during a recent investigation of interference from outdoor higher EIRP U-NII devices to the Terminal Doppler Weather Radar system, NTIA determined that some U-NII devices moved off of the channel, but still caused interference due to the transmitter out-of-channel emission levels being too high.[116] Wireless industry representatives provided representative emission spectra for U-NII devices in Table B-11 so this can be addressed in the analysis examining sharing with federal systems. NTIA will expand the methodology in NTIA Technical Memorandum 09-461 to include off-frequency interference from U-NII devices. This problem can be addressed by including a requirement in the U-NII regulations specifying a minimum frequency separation when a federal system is detected on an RF channel or specifying a transmitter emission mask. There are also questions regarding the DFS sensing capabilities associated with the wider bandwidth U-NII devices and the ability to detect off-frequency pulsed radar signals that will need to be addressed.

The computer model used to develop the existing U-NII regulations determines if the DFS detection threshold is exceeded for a particular U-NII device, generates a uniform random number, and compares it to the probability of a U-NII device detecting a radar signal, which is referred to as the probability of coincidence (POC). The POC is based on a combination of the probability of a radar signal being present and the probability of the U-NII DFS detection not being blocked by the DFS-equipped device being in a transmit mode. The POC expresses the probability that the DFS-equipped device is able to detect the radar signal when the radar signal is present. The time the radar signal is present is based on radar parameters such as 3 dB antenna beamwidth, antenna scan rate, pulsewidth, and pulse repetition interval. The time that the DFS-equipped U-NII device is capable of detecting a radar signal is based on the packet length and timing of the data transmissions. The model uses the parameters and methodology for calculating the POC described in Recommendation ITU-R M.1652. Industry representatives have recommended a change to the methodology contained in Recommendation ITU-R M.1652 to generalize the methodology to cover all possible frame sizes that are allowed by recent IEEE 802.11 amendments. NTIA needs to evaluate closely, the impact that this new methodology will have on the detection of the different

[116] As an interim procedure to protect Terminal Doppler Weather Radar (TDWR) systems from interference, the FCC requires U-NII devices within 35 kilometers of a TDWR location to be separated by at least 30 MHz from the TDWR operating frequency. *See* http://apps.fcc.gov/kdb/GetAttachment.html?id=dV24P2kaxB%2BkKzlPZxHxHg%3D%3D. This problem has only been encountered with U-NII devices used for outdoor point-to-point applications.

types of signals used by federal systems operating in the 5350-5470 MHz and 5850-5925 MHz bands.

APPENDIX C
DETAILED DESCRIPTION OF DEPARTMENT OF DEFENSE 5 GHZ SYSTEMS

INTRODUCTION

The Department of Defense (DoD) uses the 5350-5470 MHz and 5850-5925 MHz frequency bands for radar systems. The band is used for multifunction anti-air warfare radars that are part of a transportable, advanced ground-based air defense missile system in support of tactical operations and training. Additionally, the bands also support the operations of new multifunction shipboard radar systems operated by both the Navy and the U.S. Coast Guard. Navy radars also use this band for surface-search and navigation functions.

These frequency bands are part of the overall frequency range known as C-Band, a principal band supporting DoD range operations. The military agencies use this frequency range extensively for test and launch range instrumentation radars to track aircraft, rockets, missiles, satellites, launched vehicles, and other targets. These radars may be either fixed or transportable systems and are typically used as the prime coverage system for range safety. Many DoD ranges use transponders in this band, operated in conjunction with the range radars, on platforms undergoing testing. The transponders provide a high degree of tracking accuracy and are critical elements of range safety.

DoD also uses these frequency bands for other systems including weather radars and a new sense and avoid radar currently under development for large UAS platforms. There are also DoD communications links that are authorized to operate in these bands. These links variously support the operations of certain mid-altitude UAS platforms, remotely operated video targeting systems, and possible future wideband maritime communications systems. Finally, these bands support Electronic Attack/Electronic Warfare (EA/EW) capabilities.

This appendix describes most of the DoD systems operating in the 5350-5470 MHz and 5850-5925 MHz bands.

UNITED STATES ARMY

Range and Tracking Radars

The Army requires accurate trajectory data of objects in the development and testing of various test objects such as missiles and rockets. The data are provided by range tracking radars and beacon transponders. These systems operate in the 5400-5900 MHz band. The range tracking radars are designed specifically to acquire and accurately track missiles (with or without beacons), nose cones, boosters, range assemblies, instrument packages, and debris and to provide trajectory data of these objects for real-time or future evaluation of performance. Target-position data from the radars also can be used to maintain range safety. Target tracking can be performed using either skin track or by the use of beacon transponders. Beacon transponders are installed on-board missiles and other test objects to enhance radar tracking of the test objects whenever the skin track signal is too weak or the tracking radar is experiencing interference. This is accomplished through

the interrogation of the beacon by the tracking radar and a response (which is usually a stronger signal than the skin return) from the beacon transponder.

Weather Radars

Weather radars are used to locate precipitation, calculate its motion, and estimate its type (*i.e.*, rain, snow, hail, etc.). Modern weather radars are mostly pulse-Doppler radars, capable of detecting the motion of rain droplets in addition to the intensity of the precipitation. Both types of data can be analyzed to determine the structure of storms and their potential to cause severe weather.

Unmanned Aerial System Data Links

The Army is a major developer and user of UASs and Unmanned Aircraft (UA). A UAS includes one or more UA and associated Ground Control Stations (GCS). Medium-altitude UA that use the 5350-5470 MHz band are used to provide homeland security; drug interdiction; intelligence, surveillance, and reconnaissance; combat search and rescue; laser target designation for precision strike by manned aircraft; convoy and raid over-watch; and real-time full-motion video for target development. Test and training for all these important missions are conducted at sites in the United States.

Several UAS include a C-Band (5250-5850 MHz) data link system, the Medium Altitude Endurance Unmanned Aerial Vehicle (UAV) Line-of-Sight Command and Video Link. Data are passed on two sub-bands: 5250-5475 MHz and 5625-5850 MHz. A diplexer permits full duplex operation. Command and control information is passed from the GCS to the UA using a Command Link (CL). Payload data and status information is passed from the UA to the GCS using a Return Link (RL). The transmitter and receiver units can be software configured to perform CL or RL functions; this is useful in relaying data from one UA to another. The affected UAS data link systems utilize two CLs and two RLs.

Use of UAs for development, training, and operations in the U.S. air space is highly regulated by the Federal Aviation Administration (FAA) to ensure aircraft safety of flight. As a result of safety-of-flight concerns, the FAA has placed a number of restrictions on U.S. UAS operations.

UNITED STATES NAVY AND UNITED STATES MARINE CORPS/UNITED STATES COAST GUARD

Shipboard Navigation Radars

The shipboard navigation radar is a two dimensional (azimuth and range) pulsed radar set primarily designed for surface operations. It can also detect anti-ship missiles and low flying aircraft. The radar set operates in the 5450-5825 MHz range, using a coaxial magnetron as the transmitter output tube. The transmitter/receiver is capable of operation in several pulse width settings: long pulse (1.0 μs), medium pulse (0.25 μs), or short pulse (0.10 μs) modes to enhance radar performance for specific operational or tactical situations. Pulse Repetition Frequencies (PRFs) of 750, 1200 and 2400 pulses per second (pps) are used for the long, medium, and short pulse modes, respectively. The higher pulse repetition frequency (PRF) settings coupled with the shortest pulse increases the resolution of the radar return. Increased radar resolution enables the radar operator/observer to discern or differentiate between a single large target or two smaller targets in close proximity to each other. System performance is improved by the addition of a very narrow pulse mode (0.1 μs), providing better navigation and improved resolution of small targets at short ranges. Long and medium pulse (1 and 0.25 μs) modes are used in open sea for detection of long-range and medium-range targets. Performance is further improved by a digital video clutter suppressor and an interference suppressor. The shipboard navigation radar provides primary surface search and navigation capabilities, with limited air search capability, for the ships it is installed on. Other variations perform navigation, station keeping, and general surface search duties in addition to supporting the combat systems as shown below:

- Primary combat mission (Anti-surface Warfare)—provides a quick reaction, automated target detection and track capability
- Secondary combat mission (Anti-Air Warfare)—detects low elevation (conventional) threats.

The shipboard navigation radar set is installed on 105 U.S. Navy ships. It operates continuously during the ship's deployment, and operations depend on the ship's schedule and availability.

Shipboard Multifunction Radar #1

The Navy and the U.S. Coast Guard are developing a new shipboard radar to operate on future surface combatants. This radar is currently operating on a limited number of ships and is approved for operational use by NTIA. This radar is a shipborne multimode three dimensional (3-D) radar for surveillance and weapon assignments and is ideally suited for the light combatants providing excellent range for small Radar-Cross-Section (RCS) targets. This radar uses a phased array antenna for simultaneous detection and tracking of multiple targets and employs electronic stabilization to neutralize the rolling motion of the ship operating in choppy coastal waters. This shipboard radar provides the following modes of operation: target indication, sea skimmer, sea and air surveillance, extended range, long range surveillance, and gun fire support.

The Shipboard Multifunction Radar #1 operates continuously during the ship's deployment, based on the ship's schedule and availability, performing normal littoral patrol activities, homeland defense, Humanitarian Assistance and/or Disaster Response (HA/DR) missions, or Fleet priority tasking. Similarly, the Coast Guard uses this same radar during the cutter's deployment performing the following missions: defense readiness; drug interdiction/counter drug; other law enforcement; living marine resource; ports, waterways, and coastal security; migrant interdiction; search and rescue; and marine environmental protection.

Shipboard Multifunction Radar #2

The Navy is also developing another new shipboard radar to operate on future surface combatants. This radar is currently operating on a limited number of ships and is approved for operational use by the NTIA. This radar also is a shipborne multimode 3-D radar for surveillance and weapon assignments and is ideally suited for the light combatants providing excellent range for small radar cross section targets. This radar uses a phased array antenna for simultaneous detection and tracking of multiple targets and employs electronic stabilization to neutralize the rolling motion of the ship operating in choppy coastal waters.

Shipboard Multifunction Radar #2 functions include track-on-jam, target classification of both hovering and moving helicopters, navigation capabilities, target indication to weapon systems for precision anti-air/surface engagement, and splash spotting. It operates continuously during the ship's deployment, based on the ship's schedule and availability, performing normal littoral patrol activities, homeland defense, HA/DR missions, or Fleet priority tasking as required.

Range and Tracking Radars and Transponders

The Navy requires accurate trajectory data for flight testing of various test objects such as aircraft, missiles, and rockets. The data are provided by range tracking radars and beacon transponders. These systems operate in the 5400-5900 MHz frequency band, which overlaps the 5350-5470 and 5850-5925 MHz bands. The range tracking radars are designed specifically to acquire and accurately track missiles (with or without beacons), nose cones, boosters, range assemblies, instrument packages, and debris and to provide trajectory data of these objects for real-time or future evaluation of performance. Target-position data from the radars also can be used to maintain range safety. Target tracking can be performed using either skin track or by the use of beacon transponders. Beacon transponders are installed on-board missiles and other test objects to enhance radar tracking whenever the skin track signal is too weak or the tracking radar is experiencing interference. This is accomplished through the interrogation of the beacon by the tracking radar and a response (which is usually is a stronger signal than the skin return) from the beacon transponder.

The Navy operates numerous test and training facilities within the United States and Possessions (US&P). These facilities are equipped with several different tracking radars. The radars and transponders may be tuned to any frequency in the 5400-5900 MHz frequency band, and operate at any time as test, evaluation, and training missions dictate. The range tracking radar

transmits on a fixed frequency in the allocated frequency band to skin-track targets. If the use of a beacon transponder is required, the radar transmits a coded pulse group to interrogate the beacon transponder on the missile being tracked. The beacon receiver is tuned to the radar transmit frequency and the beacon transmits a return signal to the radar.

Frequencies for the range tracking radars and beacon transponders are used during each missile system launch. As such, their use is dependent upon the number and frequency of missile flights scheduled at each test and training range. They can be used on a daily basis for test preparation and calibration, and are used continuously for the duration of each missile flight.

Other Navy Systems

The Navy has additional systems that are capable of operating over the two frequency bands under study. However, the time available for this initial effort did not allow for a technical assessment of the possible impact of sharing on these operations and systems. The Navy will need to identify and describe these systems for the follow-on detailed analysis.

UAS Data Links. The Navy is a developer and user of UAS and UA. Medium-altitude UAS that use the 5350-5470 MHz band are used to provide homeland security; drug interdiction; intelligence, surveillance, and reconnaissance; combat search and rescue; laser target designation for precision strike by manned aircraft; convoy and raid over-watch; and real-time full-motion video for target development. Test and training for all of these important missions is conducted at sites in the United States.

The Medium-altitude UAS contains a C-Band (5250-5850 MHz) data link system.[117] Data is passed on two duplexed sub-bands, 5250-5475 MHz and 5625-5850 MHz. Command and control information is passed from the GCS to the UA using the CL. Payload data and status information are passed from the UA to the GCS using the RL. The transmitter and receiver units can be software configured to perform CL or RL functions; this is useful in relaying data from one UA to another. The UAS data link system utilizes two CLs and two RLs.

SeaLancet Data Link Radio. SeaLancet is a tactical, wideband OFDM networked radio solution designed specifically to meet the demanding communications requirements of military tactical missions. This innovative, network-centric radio connects the maritime battlespace to the ground- and air-based theatre network, utilizing unique protocol and software modifications that deliver assured communications for long-range, high throughput, net-centric missions.

Compact size and high performance makes SeaLancet ideal for use on a wide range of tactical platforms in a dynamic, networked environment. The 5 GHz band is used as a command

---

[117] *See* S. Bonter, Y. Kim, J. Timko, and T. Luu. *Electromagnetic Compatibility Analysis of the Predator UAV Line-of-Sight Data Link Terminal with the Communications-Electronics Environment at Indian Springs Air Force Auxiliary Field.* JSC-PR-03-024. DoD Joint Spectrum Center. Annapolis, MD (November 2003) Distribution of this document is authorized to DoD Components Only; Operational Use; November 2003. Other requests for this document shall be referred to Air Combat Command UAV Special Mission Office (ACC/DR-UAV) or Joint Spectrum Center Acquisition Support Division (JSC/J8).

and control link band for unmanned aerial vehicles. Potential future use include littoral combat ship (LCS) mission modules; Extended Maritime Interdiction Operations; Tactical Ship-to-ship communications; Long Range Airborne Intelligence, Surveillance, and Reconnaissance; Pier side connectivity and coastal surveillance.

Multi-band Satellite Terminals. Multi-band satellite terminals are capable of operations in the satellite communications bands referred to as C, X, Ku, and Ka bands. The 5925-6425 MHz frequency range is the uplink, known as C-Band, for commercial Fixed Satellite services. DoD agencies, including the Navy, often lease communications capacity on commercial satellite systems operating at C-Band. The frequency range 5850-5925 MHz also has a primary allocation for commercial Fixed Satellite uplink operations; however, restrictions placed on such operations by footnote US245 have limited the development of services in the band and commercial satellite services are typically not provided. The C-Band satellite earth station receive frequencies are at 3700-4200 MHz. The earth stations have no receive function in the frequency ranges of interest (5350-5470 MHz and 5850-5925 MHz).

Weather Radars. Ground-based weather radars are used to aid flight control of aircraft or possibly tethered aerostats used for law enforcement. These radars are located near airfields and the resulting weather products are used by both the military and/or civilian airfield staff and/or the aerostat flight control staff.

Electronic Attack/Electronic Warfare. The U. S. Navy performs EA/EW training and testing in the 5350-5470 MHz and 5850-5925 MHz bands. Training operations that include these frequency bands take place in the US&P and coastal waters, are intermittent and coordinated.

UNITED STATES AIR FORCE

Range and Tracking Radars and Transponders

The U. S. Air Force (USAF) requires accurate trajectory data for flight testing of various test objects such as aircraft, missiles, and rockets. The data are provided by range tracking radars and beacon transponders. These systems operate in the 5400-5900 MHz frequency band, which overlaps the 5350-5470 and 5850-5925 MHz bands. The range tracking radars are designed specifically to acquire and accurately track missiles (with or without beacons), nose cones, boosters, range assemblies, instrument packages, and debris and to provide trajectory data of these objects for real-time or future evaluation of performance as well as for range safety of personnel and equipment. Use of target-position data from the radars is the prime means to maintain range safety. Target tracking can be performed using either skin track or by the use of beacon transponders. Beacon transponders are installed on-board missiles and other test objects to enhance radar tracking whenever the skin track signal is too weak or the tracking radar is experiencing interference. This is accomplished through the interrogation of the beacon by the tracking radar and a response (which is usually is a stronger signal than the skin return) from the beacon transponder.

The USAF operates numerous test and training facilities within the US&P. The radars and transponders may be tuned to any frequency in the 5400-5900 MHz frequency band, and operate at

any time as test, evaluation, and training missions dictate. The range tracking radar transmits on a fixed frequency in the allocated frequency band to skin-track targets. If the use of a beacon transponder is required, the radar transmits a coded pulse group to interrogate the beacon transponder on the missile being tracked. The beacon receiver is tuned to the radar transmit frequency and the beacon transmits a return signal on an offset frequency within the band to the radar.

Frequencies for the range tracking radars/beacon transponders are used during each missile system launch, primarily for range safety. As such, their use is dependent upon the number and frequency of missile flights scheduled at each test and training range. They can be used on a daily basis for test preparation and calibration, and are used continuously for the duration of each missile flight.

UAS Data Links

Like the Army and Navy, the USAF is a major developer and user of UASs and UA. These systems may be used for surveillance and intelligence gathering and can support a variety of mission payloads including radars; cameras; infrared and electro-optical sensors; and electronic information gathering systems. Other federal agencies that have applications for a such a platform—for operations such as hurricane monitoring, maritime surveillance, drug interdiction, and wildfire monitoring—have systems in development or are considering such systems. In addition, the development of platforms and training of USAF UA pilots occur at several locations within the US&P. The versatility of the platform, the expanding applications, and the need for pilot training have increased the interest in sustaining these operations in the U.S.

Airborne Sense and Avoid Radars

Use of UAs for development, training, and operations in U.S. air space is highly regulated by the FAA to ensure aircraft safety of flight. As a result of safety-of-flight concerns, the FAA has placed a number of restrictions on UAS operations. The USAF and other federal agencies are seeking to expand the U.S. operations of certain UA platforms while complying with the safety concerns of the FAA. To address these concerns, the DoD is developing both ground-based and airborne Sense-And-Avoid (SAA) capabilities to be used with UA operations. Of primary concern for the frequency ranges being considered is an unmanned sense, track, and avoid radar being developed by the USAF.

The USAF request for developmental spectrum certification describes the radar as a sensor whose output is used by an on-board autonomous SAA system on the UAS. The radar is able to detect and track other aircraft in its field of view to help avoid collisions. The system is a pulsed Doppler radar that uses linear frequency modulated pulses, comparatively low peak powers, and a high PRF. The system has a forward-looking, phased array antenna with a high gain and can scan in both the vertical and horizontal planes. The 5350-5460 MHz band is the primary frequency range currently being considered in the development of this radar, while 5150-5250 MHz is being considered as an alternate.

Other USAF Systems

The USAF has additional systems that are capable of operating in the 5350-5470 MHz and 5850-5925 MHz frequency bands. However, the time available for this initial effort did not allow for a technical assessment of the possible impact of sharing on these operations and systems. The USAF will need to identify and describe these systems for the follow-on detailed analysis.

Targeting Pods. The targeting pods use the 5250-5850 MHz frequency band for downlink and uplink communication with the Remotely Operated Video Enhanced Receiver (ROVER) family of systems. This communication link allows ROVER-equipped ground units to view targeting video and receive metadata from the pods (*i.e.*, to see what the pilot is seeing), greatly enhancing weapon system effectiveness and reducing target acquisition time. Nominally, the analog downlink range is 25 miles, while the digital downlink range (at the lowest data rate) is 40 miles. For reliability and robustness these links are able to operate in frequency bands from UHF to Ku-band; operations at the frequencies of interest in this effort are on a not-to-interfere basis in the US&P since the band allocations do not support Mobile service operations on a primary, protected basis.

The targeting pods are carried on a variety of USAF and U.S. Marine Corp aircraft and are used domestically at USAF, Air National Guard, and Air Force Reserve training and testing locations. Follow-on versions of the pods are in various stages of development, and will continue to undergo qualification and operational testing at Edwards Air Force Base (AFB), Eglin AFB, and Nellis AFB during the upcoming months.

Ground Multi-band Terminal. The USAF has frequency assignments for the Ground Multi-band Terminal (GMT) at the Utah Test and Training Range in Utah. GMT terminals are capable of operations in the satellite communications bands referred to as C, X, Ku, and Ka bands. The 5925-6425 MHz frequency range is the uplink for commercial Fixed Satellite services known as C-Band and DoD agencies, including the AF, often lease communications capacity on commercial satellite systems operating at C-Band. The frequency range 5850-5925 MHz also has a primary allocation for commercial Fixed Satellite uplink operations; however, restrictions placed on such operations by footnote US245 have limited the development of services in 5850-5925 MHz band. For the frequency range of interest, the GMT does not have operations as there are no commercial satellite services in the band. The C-Band satellite receive frequencies are at 3700-4200 MHz. The terminal has no receive function in the 5350-5470 MHz and 5850-5925 MHz bands.[118]

Ground-Based Weather Radar. The ground-based weather radar is a version of the weather radar that Rockwell Collins produces for use on aircraft. The USAF has one frequency assignment for this ground-based weather radar at Fort Huachuca, AZ. The radar is used to aid in the flight control of a tethered aerostat at Fort Huachuca for law enforcement. The radar is located

[118] There is a potential interference problem to the receiver on-board the satellite. Since the military agencies only lease the service as customers, it is anticipated that the impact to the satellite receiver will be addressed by the FCC working with the commercial satellite service providers and will not be considered as part of this study.

near the airfield on Fort Huachuca and weather products are used by both the aerostat flight control staff and staff at the Army/civilian airfield.

Electronic Attack/Electronic Warfare. The USAF performs EA/EW training and testing in the 5350-5470 MHz and 5850-5925 MHz bands. Training operations that include these frequency bands take place in the US&P and coastal waters, are intermittent and coordinated.

Diagnostic Radar Systems. Diagnostic radar systems are being implemented to measure the effectiveness of aircraft low-observable (LO) materials. These systems use RCS imaging technology to identify LO defects, categorize the magnitude of the defect, and verify LO integrity across a broad range of frequencies, including both of the target 5 GHz bands. These diagnostic radar systems are used at short distances from the aircraft. Frequency assignments are in place at Whiteman AFB; Plant 42, Palmdale, California; Edwards AFB; Tyndall AFB; Holloman AFB; Nellis AFB; Hill AFB; Eglin AFB; and Langley AFB.

APPENDIX D

DESCRIPTION OF DEDICATED SHORT-RANGE COMMUNICATION SERVICE SYSTEMS OPERATING IN THE 5850-5925 MHZ BAND

INTRODUCTION

The appendix provides a description and technical parameters for the Intelligent Transportation System Dedicated Short-Range Communications Service (DSRCS) systems operating in the 5850-5925 MHz band.

DSRCS SYSTEM DESCRIPTION

The DSRCS Road Side Units (RSUs) are authorized under Part 90 (Section 90.7) of the Federal Communications Commission (FCC) rules. The On-Board Units (OBUs) are authorized under Part 95 (Subpart L) of the FCC rules. The information in this appendix comes from the Institute of Electrical and Electronics Engineers (IEEE) Standard for Information technology – Telecommunications and information exchange between systems – Local and metropolitan area networks – Specific requirements, Part 11: Wireless Local Area Network (LAN) Medium Access Control (MAC) and Physical Layer (PHY) Specifications and will be referred to as the IEEE 802.11p standard. Other information is contained in the rules and regulations set forth by the Federal Communications Commission.

The modulation used for DSRCS is OFDM. Figure D-1 provides a simple block diagram for a transmitter and receiver.

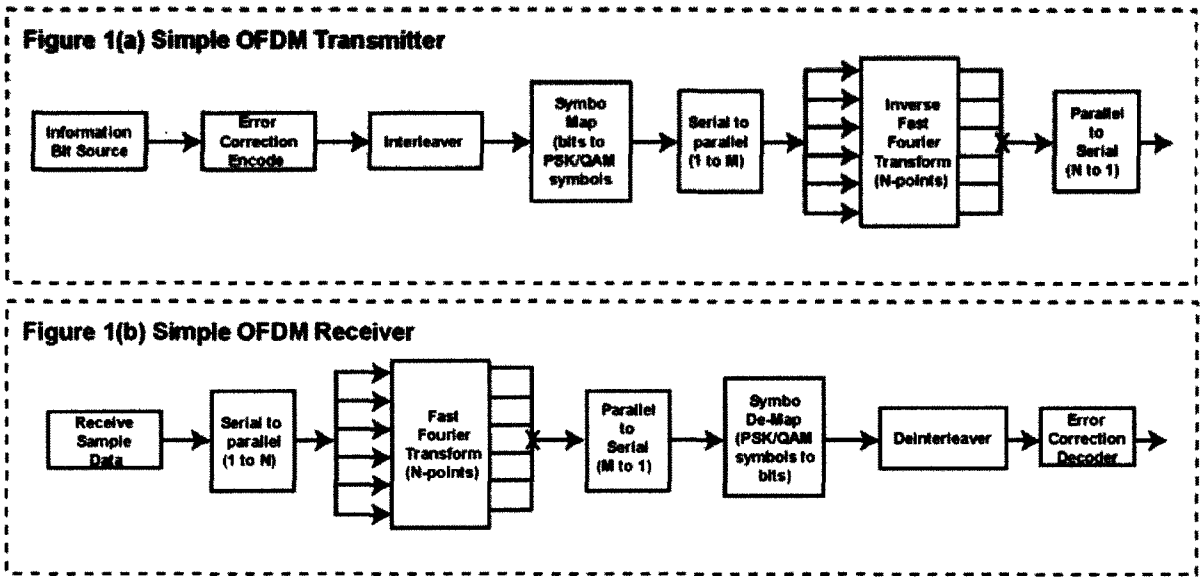

Figure D-1. DSRCS Transmitter and Receiver

The transmitter and receiver technical characteristics for DSRCS systems are provided in Table D-1 through D-4.

Table D-1. Transmitter Characteristics

Parameter	Value	
Emission 3 dB Bandwidth (MHz)	10 or 20	
Power (Peak) (dBm)	23 to 44.8 (Depending on RSU or OBU and Channel used)	
Emission Spectrum (Relative Attenuation (dB) as a Function of Frequency Offset from Center Frequency (ΔF) (MHz))	**Attenuation**	**ΔF**
	See Note a	See Note a
Antenna Gain (Main beam) (dBi)	3 to 15 typical	
Azimuth Off-Axis Antenna Pattern (dBi as a function of off-axis angle in degrees)	Omni is typical; sectorized antennas sometimes used with 65 to 90 deg at 3dB for Infrastructure DSRCS transmitter antennas	
Elevation Off-Axis Antenna Pattern (dBi as a function of off-axis angle in degrees)	Typical 3 to 15 dB with 3dB point at 15 to 35 deg.	
Antenna Height (meters)	1.5-15[b]	
Antenna Polarization	Primarily vertical (some dual linear polarized)	
Antenna Azimuth 3 dB Beamwidth (degrees)	Normally Omni for infrastructure and vehicle; Infrastructure Sectorized antennas man be 65 to 90 deg	
Cable, Insertion, or Other Losses (dB)	1 to 3 dB typical. (Function of installation and materials used)	

Note a: Spectrum mask for 10 MHz channels, the transmitted spectral density shall have a 0 dBr bandwidth not exceeding 9 MHz and shall not exceed the spectrum mask created using the permitted power spectral density levels listed in Table D-2.

Note b: A RSU may employ an antenna with a height exceeding 8 meters but not exceeding 15 meters provided the EIRP specified in the table below is reduced by a factor of 20 log(Ht/8) in dB where Ht is the height of the radiation center of the antenna in meters above the roadway bed surface. The EIRP is measured as the maximum EIRP toward the horizon or horizontal, whichever is greater, of the gain associated with the main or center of the transmission beam. The RSU antenna height shall not exceed 15 meters above the roadway bed surface.

Table D-2. Transmitter Power Spectral Density

Transmit Power Class	Permitted Power Spectral Density (dBr)				
	± 4.5 MHz offset (±f1)	± 5.0 MHz offset (±f2)	± 5.5 MHz offset (±f3)	± 10 MHz offset (±f4)	± 15 MHz offset (±f5)
Class A	0	–10	–20	–28	–40
Class B	0	–16	–20	–28	–40
Class C	0	–26	–32	–40	–50
Class D	0	–35	–45	–55	–65

Table D-3. Receiver Characteristics

Parameter	Value	
Receiver 3 dB Intermediate Frequency (IF) Bandwidth (MHz)	Not Applicable to OFDM Receiver; direct conversion to baseband	
Receiver IF Selectivity (Relative Attenuation (dB) as a Function of Frequency Offset (MHz))	**Attenuation**	**ΔF**
	See Table D-4	See Table D-4
Noise Figure (dB)	5 to 15 ; 10 typical	
Antenna Gain (Main beam) (dBi)	3 to 15 typical	
Azimuth Off-Axis Antenna Pattern (dBi as a function of off-axis angle in degrees)	Omni is typical; sectorized antennas sometimes used with 65 to 90 deg at 3dB for Infrastructure DSRCS transmitter antennas	
Elevation Off-Axis Antenna Pattern (dB as a function of off-axis angle in degrees)	Typical 3 to 15 dB gain with 3dB point at 15 to 35 deg.	
Antenna Polarization	Typically Vertical; some dual linear	
Antenna Height (meters)	1.5 to 15	
Antenna Azimuth 3 dB Beamwidth (degrees)	Typically omni; may be 65 to 90 deg at 3dB for infrastructure sectorized antenna	
Cable, Insertion, or Other Losses (dB)	Function of installation, transmission cable type/length and connector/coupler loss; typically 1 to 3 dB; typical value is 2 dB	

Table D-4. Receiver Selectivity

Data Rate (Megabits Per Second)	Adjacent Channel Rejection (dB)	Alternate Adjacent Channel Rejection (dB)
3	28	42
4.5	27	41
6	25	39
9	23	37
12	20	34
18	16	30
24	12	26
27	11	25

APPENDIX E

ACRONYMS AND ABBREVIATIONS

A	Activity Rate
AFB	Air Force Base
AIFS	Arbitration Innerframe Space
AP	Access Point
ASTM	American Society for Testing and Materials
BE	Best effort
BK	Background
BSS	Basic Service Set
BW	Bandwidth
C.F.R.	Code of Federal Regulations
CL	Command Link
dB	Decibel
dBi	Decibel Isotropic
dBm	Power ratio in decibels of the measured power to one milliwatt
dBr	Decibel reference
DFS	Dynamic Frequency Selection
DoD	Department of Defense
DOT	Department of Transportation
DSRCS	Dedicated Short Range Communication Service
EA/EW	Electronic Attack/Electronic Warfare
EDCA	Enhanced Distributed Channel Access
EIRP	Equivalent Isotropically Radiated Power
EMC	Electromagnetic Compatibility
FAA	Federal Aviation Administration
FCC	Federal Communications Commission
GCS	Ground Control Station
GHz	Gigahertz
GMT	Ground Multi-band Terminal
HA/DR	Humanitarian Assistance and/or Disaster Response
Ht	Height
IEEE	Institute for Electrical and Electronics Engineers
IF	Intermediate Frequency
IFS	Innerframe Space
ISM	Industrial, Scientific and Medical
ITU-R	International Telecommunication Union-Radiocommunication Sector
JTG	Joint Task Group
kHz	Kilohertz
km	Kilometers
LAN	Local Area Network
LO	low-observable
M	Market Penetration
m	Meters
MAC	Medium Access Control Layer
MCS	Modulation, coding, and spatial streams
MHz	Megahertz
msec	Microsecond

mW	Milliwatts
NASA	National Aeronautics and Space Administration
NHTSA	National Highway Traffic Safety Administration
NTIA	National Telecommunications and Information Administration
OBU	Onboard Unit
OFDM	Orthogonal Frequency Division Multiplexing
P	Total Population
P_E	Population Environment
P_D	Population Distribution
PDF	Probability Density Function
PHY	Physical Machine Layer
PLCP	Physical Layer Conversion Protocol
PPDU	PLCP Protocol Data Unit
PPS	Pulses per Second
PRF	Pulse Repetition Frequency
POC	Probability of Coincidence
PSK	Phased Shift Keying
QAM	Quadrature Amplitude Modulation
RADARSAT	Radar Satellite
RCS	Radar-Cross-Section
RF	Radio Frequency
RL	Return Link
RLAN	Radio Local Area Network
ROVER	Remotely Operated Video Enhanced Receiver
RSU	Road Side Unit
S	System Factor
SAA	Sense-And-Avoid
SAR	Synthetic Aperture Radar
SS	Spatial Streams
TCP	Transmission Control Protocol
TDWR	Terminal Doppler Weather Radar
TPC	Transmitter Power Control
TVBD	Television Band Device
TXOP	Transmit Opportunity
UA	Unmanned Aircraft
UAS	Unmanned Aircraft Systems
UAV	Unmanned Aerial Vehicle
U-NII	Unlicensed-National Information Infrastructure
U	Uniform
U	Users
U.S.	United States
US&P	United States and Possessions
μsec	Microsecond
VI	Video
VO	Voice
W	Watt
WAS	Wireless Access Systems
Wi-Fi	Wireless-Fidelity
WRC-03	World Radiocommunication Conference 2003
WRC-15	World Radiocommunication Conference 2015