Before the
Federal Communications Commission
Washington, D.C. 20554

In the Matter of	)	
	)	
Proposed Amendments to the Service Rules	)	PS Docket No. 13-87
Governing Public Safety Narrowband	)	
Operations in the 769-775/799-805 MHz	)	
Bands	)	

June 11, 2013

Re: Request for Comments, SEVENTH REPORT AND ORDER NOTICE OF PROPOSED RULEMAKING, FCC 13-40, released April 1, 2013.

Re: Paragraph 91 – The Future of Public Safety Wireless

We have attached an Appendix (*Use LTE Technology to Upgrade Public Safety P-25 on a Shoestring*) that re-imagines public safety mission critical P-25 voice deployment strategies. Within the context of the concepts and technologies proposed in that Appendix, we would like to make some comments pertinent to NPR 13-40, paragraph 91:

1) "In light of these developments, we seek comment on whether the long-term future of the 700 MHz narrowband spectrum band would be best served by suspending or eliminating mandatory migration to 6.25 kilohertz technology. Could the spectral efficiency benefits of narrowbanding be outweighed by the potential inefficiency of requiring public safety agencies to devote resources in this band to a technological path that may not meet their long-term needs? Conversely, do the benefits derived from enhanced efficiencies of narrowband technology outweigh the costs of maintaining the current framework in the interim?"
    a. Comment: The FCC should abandon this mandate/deadline. Public Safety upgrades to spectrum efficient equipment are <u>funding limited</u> and thus by continuing this mandate the FCC will be subjected to years of no-value-added paperwork where public safety entities request waivers, then comments, then approvals, simply because of lack of funding for equipment modernization. Further, the FCC should recognize the reality that the 6.25 KHz spectrum efficiency metric is not applicable to P-25 technology in any meaningful way, much as a 6.25 KHz metric is not in any meaningful way applicable to LTE technology spectrum efficiency. Public safety has long used innovative technologies such as multicast and simulcast that create enormous

spectrum efficiencies compared to commercial LMR, 2G, 3G, and 4G cellular technologies. Multicast typically produces spectrum efficiencies of 25X to >100X, and simulcast creates additional spectrum efficiencies of 3X to >10X. Thus, P-25 25X to >1000X spectrum efficiencies are many times more efficient in comparison to the FCC spectrum efficiency mandate of 2X accomplished from going from 12.5KHz (or, even, 25 KHz) to 6.25 KHz equivalence.

b. Benefits: Elimination of this deadline will eliminate expenditure of public safety funds for legal proceedings and paperwork and will permit those funds to be re-allocated to actual public safety operations.

2) "Furthermore, could licensees' needs be addressed by encouraging narrowbanding to 6.25 kilohertz on a voluntary basis without requiring it?"
   a. Comment: Emphatically, YES!
   b. Discussion: Since state and local voluntary upgrades are greatly dependent on cost and funding availability, then for the FCC to encourage this voluntary migration the FCC should endeavor to change applicable 700 MHz narrowband rules in ways to reduce 700 MHz narrowband deployment costs. In the appendix, we present strategies that have demonstrated dramatically reduced deployment costs in other wireless systems (public safety, military, LTE) that could be applied for a very dramatic cost reduction in P-25 Ø2 700 MHz deployments. We describe how public safety can repurpose VALUABLE existing resources (spectrum, equipment, sites, standards, funding) in innovative ways, and how public safety, instead of continually begging for more spectrum, resources, and funding, could use these strategies to upgrade to modern P-25 equipment in the near term. If the cost of moving users to 700 MHz P-25 Ø2 is reduced by 90% or more, then far more public safety entities can afford and will voluntarily upgrade their systems than under any FCC mandate.
   c. Example rule change: FCC can encourage adjacent channel stacking of either 12 (or 16) 12.5KHz channels into 150 kHz (or 200 KHz) blocks, thereby enabling cost effective LTE technology/components to be used for narrowband (e.g., P-25) service.
   d. Benefit: Faster migration, new equipment for public safety users, much greater spectral efficiency, lower costs.

3) "Are there other potential costs and benefits that we should consider?"
   a. Comment: Yes. In regards to future public safety wireless technologies, the FCC needs to recognize the major de facto distinction between wireless CONNECTIVITY technologies (e.g., P-25) and wireless CAPACITY technologies (e.g., LTE). As such, the Public Safety community's special requirements will always favor enhanced CONNECTIVITY over CAPACITY because this difference has genuine responder life and death implications. Therefore, any life cycle and service deadlines will always favor CONNECTIVITY over CAPACITY. This means that P-25 will likely not be replaced by LTE in the near

future and will have a much longer useful service life than either the FCC or the Public Safety community currently envision.

b. Recommendation: The FCC work should plan to support spectrum vigorously and standards for both connectivity technologies (e.g., P-25) and capacity technologies (e.g., LTE) in public safety for the foreseeable future because both will be important.

We welcome further communication with FCC engineering to provide more details towards understanding these new concepts, approaches, and technologies and how they can apply to 700MHz narrowband.

Sincerely,

Edwin Kelley
Larry Cobb
Rf Engineers
Interoperable Wireless
Los Angeles, CA 90034

Appendix: Use LTE Technology to Upgrade Public Safety P-25 on a Shoestring

Edwin Kelley & Larry Cobb, Interoperable Wireless

Broadband networks, particularly LTE and FirstNet, is **THE** hot topic in public safety today. But the critical technology, the one that will make the largest difference for improving public safety effectiveness, is mission critical voice. Can it be said that mission critical voice is the most critical system that public safety must get right for the next 25 years?

You say we cannot afford it today. We propose an innovative approach for deploying mission critical P-25 voice networks based on combining commercial LTE technology and techniques with commercial P-25 equipment <u>and deploy new P-25 systems for very little money.</u> And, that is not all. Our method conserves spectrum, utilizes existing hardscape (buildings, AC, backup power, tower), and <u>permits simultaneous operation with legacy VHF and UHF equipments until the transition is complete</u>**.** Herein we describe this very low cost approach to upgrade Public Safety wireless to P-25 Ø2 in 700 MHz that:

1. Occupies same spatial deployment footprint as existing wireless VHF/UHF PTT
2. Uses LTE-like techniques and technology to dramatically reduce site cost and equipment and achieve higher Quality of Service, QoS
3. Pays for itself over a few short years in much lower maintenance fees and operational costs.

Many would agree that, in many ways, modern mission critical voice P-25 systems are far more important than broadband data/video to public safety operational effectiveness. Interoperable Wireless has developed and deployed an innovative technology based on LTE-like techniques that we call Linearly Scalable Architectures (LSA). The key here is to deploy public safety wireless systems optimized on the essential public safety requirement of Quality of Service (QoS--**<u>connectivity</u>**) rather than the cellular deployment model of optimizing **<u>User Capacity</u>**. This change of focus enables network architects to transform the deployment cost from an exponential cost function into a linear cost function (see Figure 1).

So, what features and functions would this upgraded LSA system need to have to be sufficiently low cost to be viable in today's economy? Table 1 shows those features and functions and how they may be framed to achieve this lofty, and here to fore unachievable goal. Additional structures, sites, and UPS power, backup power and air conditioning are very expensive. So, a critical strategy for reducing cost is to use the same hardscape (building, power, site, tower, A/C, UPS, backup power). That places major limitations on the physical size and power demands that existing structures can accommodate while continuing to operate legacy equipment in parallel. Our approach requires only one or two racks of equipment, the number

depending on the total number of channels a site must provide. This small size and low power consumption are two of the keys to holding down costs.

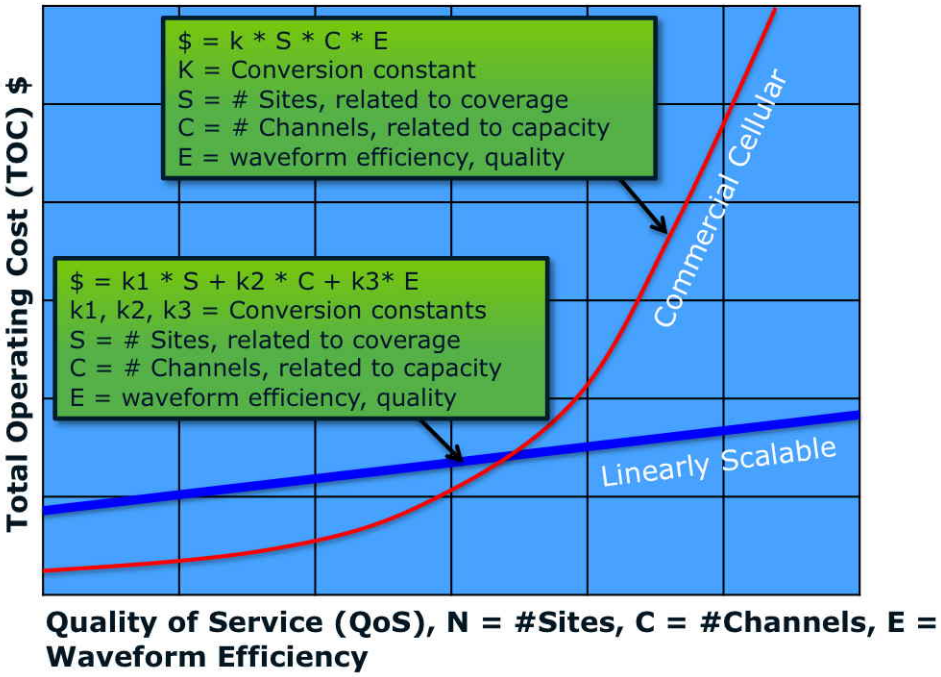

Figure 1. Linearly Scalable Architecture Dramatically Reduces Cost. By deploying wireless equipment to optimize the public safety requirement of **QoS--Connectivity**, rather than cellular function of **User Capacity**, public safety can achieve its requirements for a much, much lower cost.

Our LSA LTE-like technology shrinks the size of site RF equipment to about the size of LTE eNodeB equipment and makes it possible to share existing infrastructure during transition when both systems must operate simultaneously. Figure 2 shows a block diagram of a simplified public safety LSA system that uses LTE-like partitioning of P-25. Similar to an eNodeB, the essential RF elements (LNAs, filtering, multicarrier power amplifiers, etc) are placed at the antenna sites. Similarly, the network node contains the expensive networking and channelization equipment (e.g., commercial P-25 equipment like Motorola GTR8000 and network switches) that can be shared across many RF Node sites, similar to LTE deployments.

Table 1. Feature/Function Requirements for Upgrading to a Project-25 Ø2 System at 700 MHz

Feature/Function	Requirement
Use Existing Shelter	
Small H/W Footprint	One or two 19" racks
Low Incremental Power Reqt	~30 KW (so fits within existing power, UPS, backup gen)
Low Incremental AC Load	~30 KW
Radio Functionality: P-25 Ø2	
Voice Channels	~100
Simultaneous Operation	With legacy PTT system
Spectral Efficiency	Extremely High
Power Efficiency	Extremely High
Coverage Footprint	Same as existing service
Fault Tolerance	Multi-level and multi-media
P-25 compatibility	Ø1, Ø2 Simulcast, trunked
Commercial Technology	100%

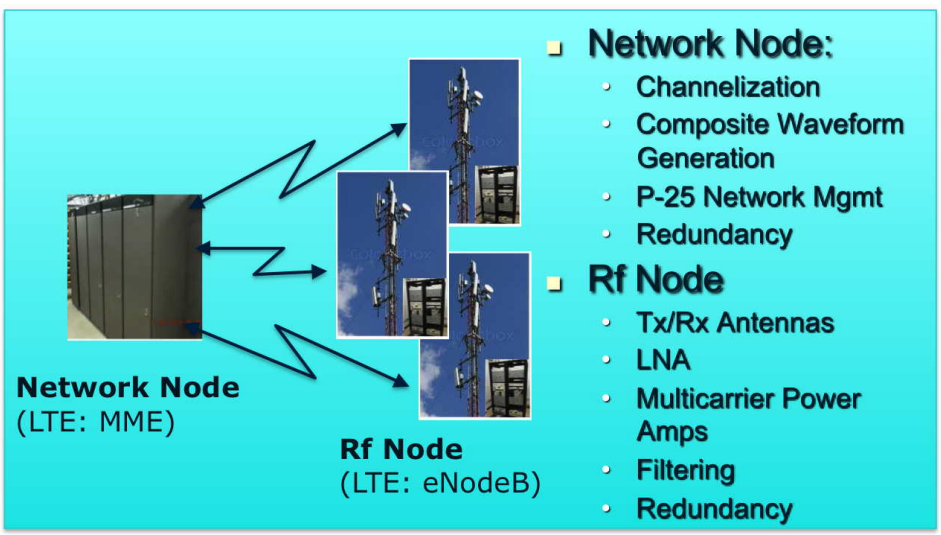

Figure 2. Linearly Scalable Architecture for P-25 Ø2 LTE-like Deployment. An LTE-like architecture topograph shows the strategy where expensive base station equipment functionality is cost efficiently replicated at antenna sites through simulcast Rf-nodes equipment. Costly P-25 simulcast controllers/voters are eliminated as composite waveforms are aligned for simulcast TX/RX functionality through the use of inexpensive fiber optic delay lines.

The composite P-25 waveforms are simulcast using fiber optic delay lines rather than simulcast controllers and voters, another significant cost saving feature of our approach. The composite waveforms are delayed systematically to each site to result in a customized simulcast wave front that eliminates simulcast interference.

Conversion from lower frequency VHF and UHF to 700 MHz using traditional methods is a major cost driver because of the 2X, 4X, or even 8X number of antenna sites, that ordinarily would be required. However, an alternative is to improve the Effective Radiated Power, ERP, and system sensitivity to compensate for the higher path losses at 700 MHz. Conversion from low band UHF to 700 MHz without increasing the number of antenna site requires a 5 dB increase in ERP and system sensitivity, and to upgrade VHF to 700 MHz, a 12 dB increase. Users in the NPSTC bands at 800 MHz will not require any increase in ERP and sensitivity. Each deployment will use different design trade-offs and means to achieve the necessary increases. We will describe one potential strategy in Figures 3 and 4.

Figure 3 is a comparison of the structure and performance a traditional transmit chain to an LSA transmit chain. As in LTE, the individual channel power amplifiers and cavity combiners are eliminated and replaced by a multicarrier power amplifier. However, this change does not mean a reduction in transmit ERP performance. In this example, even though the initial power in an individual channel amplifier begins at 100W, the resultant ERP is only 20W (+43 dBm) in the traditional transmit chain. However, in the LTE-like design, the initial +42 dBm (16 W) per carrier from the multicarrier power amplifier results in a +52 dBm ERP (160W), a 9 dB improvement. Legacy FM equipment operates in a 25 kHz noise-bandwidth and P-25 Ø2 equipment operates in a 12.5 kHz noise bandwidth, providing another 3 dB improvement. This 12 dB (9dB + 3dB) improvement is more than sufficient for the 5 dB necessary to upgrade low band UHF and also meets the 12 dB necessary to upgrade VHF.

In Figure 4 we compare the structure and performance of a traditional receive chain to an LSA receive chain. In this example, we use higher gain antennas, a tower amplifier, and take advantage of diversity reception to achieve a 10 dB improvement. The change from 25 kHz to 12.5 kHz noise bandwidths provide another 3 dB. This 13 dB (10 dB + 3dB) increase is more than enough for the 5 dB necessary to upgrade the low band UHF uplink and slightly exceeds the 12 dB necessary at VHF.

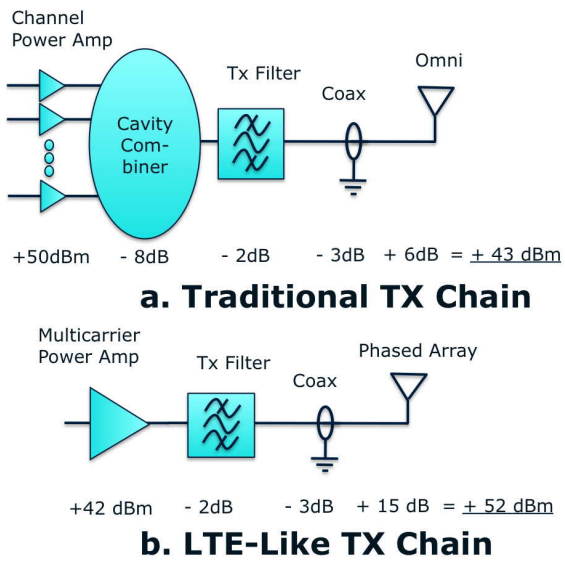

Figure 3. LTE-like TX Chain can Improve ERP by 9dB. The reduction of noise bandwidth from 25 kHz (FM) to 12.5 kHz (for P-25) results in an additional 3 dB improvement.

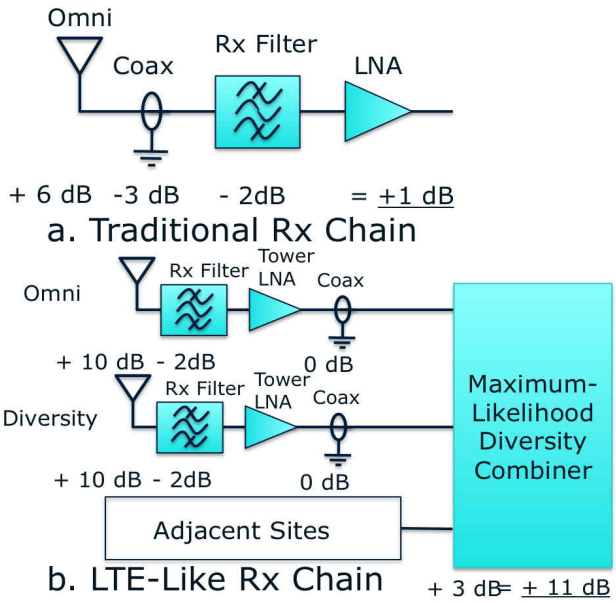

Figure 4. LTE-like RX Chain can Improve Performance by ~10 dB. The reduction of noise bandwidth from 25 kHz (FM) to 12.5 kHz (for P-25) results in an additional 3 dB improvement.

Table 2. Key Enabling LSA Technologies. Maximum use of powerful spectrum efficiency and cost efficiency technologies enable Linear Simulcast Architecture (LSA) deployment for P-25 Ø2.

Well Known Spectrum Efficiency Technologies:

1. Multicast
2. Simulcast
3. Trunking
4. TDMA
5. Talk-Groups

Standard P-25 Technology

Sensitivity Improvement Technique:

6. Tower Mounted LNAs

Incorporate Interoperable Wireless Spectrum/Cost Efficiency Technologies:

7. Composite Waveform Generation and Distribution
8. Elimination of Cavity Combiners and Individual Channel PAs
9. Adjacent and Half Channel Packing
10. Multicarrier PAs in "compression"
11. Simulcast Optimized Shaped Tx/Rx Antenna
12. Maximum Likelihood Diversity Combining
13. Simulcast "Rf-over-Fiber"
14. Simulcast "Rf-over-Microwave"

LTE-Like Technology

Simulcast Technology

Table 3. Strawman Cost Structure. An upgrade to a P-25 Ø2 700 MHz network with all new equipment could be amazingly affordable, and effectively pay for itself through much reduced maintenance and operational costs.

Cost Element	Existing Legacy Deployment	LTE-Like Deployment
# Sites/voice channels/users	9/120/10,000	9/120/10,000
New hardscape (Bldgs, AC, backup power)	= 9 * 5M = $4 5M	= 0
New 120 Channel Base Stations	=9*$10M = $90 M	= 1*8M+9*0.4M = $11.6 M
New dual band P-25 radios	=15K*$3K= $45 M	=15K*$3K= $45 M
Total	=15K*$3K= $180 M	=15K*$3K= $45 M
Annual Maintenance Cost	$180M * 10% = $18M	($57 M + $45 M) * 10% = $10.2 M
Maintenance Cost Savings	180M * 10% = $18M	
# Years to pay for conversion	$57M/$7.8M = 7.3 yrs !!	
We think this approach could apply to the ~ largest 250 metropolitan areas in the US		

We have shown how LTE-like technologies and techniques can enable VHF and UHF users to move to 700 MHz while preserving the same basic site topology and infrastructure and not incur the excessive costs of building 2X, 4X, or even 8X additional sites to overcome the higher associated path losses.

Table 2 is a summary of the key enabling technologies for LSA. The first few are familiar to the public safety community, even though they often are used sparsely. Most of the remaining technologies are LTE-techniques that are proven both in LTE installations around the world and in deployments that Interoperable Wireless has completed. Interoperable Wireless has successfully implemented these 14 technologies in various operational deployments with thousands of daily users.

Another key result is that mission critical public safety voice can be standardized into P-25 Ø2 at 700 MHz and all federal, state, county, and city users could be supported using from between one and ten percent of the 12.5 MHz currently available for voice at 700 MHz.

We have put together a straw man cost structure for a LSA deployment across a small county. This is shown in Figure 3. Achieving a P-25 Ø2 700 MHz network with new equipment can be amazingly affordable, and even repay a loan with funds captured from reduced maintenance and operational costs. True, every deployment will have different associated costs from the example here.

We have described an innovative approach that uses standard P-25 Ø2 commercial equipment combined with LTE-like elements to create a very low cost means to

deploy a mission critical P-25 system. The key elements of this approach are not any new technologies, because they are here NOW, nor exorbitant costs or lack of funding, because they are manageable. Such a system would enable the creation of regional P-25 Ø2 systems and give our first responders the voice tools they need TODAY, but local governments otherwise cannot afford to provide. Further, the system can be engineered both for first responders and additional critical users such as government employees, schools, utilities, and transportation systems. All would benefit from migrating away from vulnerable LMR and cellular networks to a fault tolerant mission critical P-25 Ø2 network and be ready for the extreme communications demands of a major emergency.

Edwin Kelley and Larry Cobb are Principal Engineers at Interoperable Wireless in Los Angeles, CA and can be contacted at edwinkelley@sbcglobal.net.