# Annual Report
# Rural Healthcare Pilot Program
# Pacific Broadband Telehealth Demonstration Project
# HCP Number: 17242
## Reporting Period: January 1st to June 30th, 2013

### 1. Project Contact and Coordination Information

*a. Identify the project leader(s) and respective business affiliations.*


Project Coordinator:
Norman Okamura, Principal Investigator
Telecommunications and Information Policy Group
Social Science Research Institute, University of Hawaii

Associate Project Coordinator:
Christina Higa, Associate Director
Telecommunications and Information Policy Group
Social Science Research Institute, University of Hawaii


*b. Provide a complete address for postal delivery and the telephone, fax, and e-mail address for the responsible administrative official.*


Norman Okamura
2424 Maile Way, #713
Honolulu, HI 96822
Phone: (808) 956-2909
Fax: (808) 956-8019
Email: norman@tipg.net

Christina Higa
2424 Maile Way, #713
Honolulu, HI 96822
Phone: (808) 956-7224
Fax: (808) 956-8019
Email: christina@tipg.net

*c. Identify the organization that is legally and financially responsible for the conduct of activities supported by the award.*

Telecommunications and Information Policy Group
Social Science Research Institute, University of Hawaii

*d. Explain how project is being coordinated throughout the state or region.*

The Pacific Broadband Telehealth Demonstration Project is a regional project involving many public and private healthcare organizations in Hawaii and the Pacific Region territories. The project is coordinated through a Technical Committee, individual health care provider sites, and through telehealth user groups. An Advisory Committee and Clinical Applications Committee will be established at a later date.

The Technical Committee includes representatives from each major network partners including the State Department of Health (Health Information Systems Office), University of Hawaii (Information Technology Services and TIPG), and the Hawaii Health Systems Corporation (Chief Information Officer). The Technical Committee meets on a regular basis to exchange information regarding the status on the State Institutional Network interconnection; to obtain current equipment inventory, and to coordinate network planning and configuration.

The Project Team also conducts individual health care provider site meetings to share information, coordinate activities, evaluate technical options and pricing for the individual sites.

In addition to technical coordination, the Project Team is also coordinating with several key telehealth, telemedicine and health informatics stakeholders to obtain current network users needs and inform these groups on the status of the PBTDP network development and coordination. These groups include the Hawaii Telehealth Collaborative; the Hawaii Information and Management Systems Society; the Hawaii Information Exchange project; and various State of Hawaii Department of Health agencies.

A wiki site has also been setup with access for each site to contribute information and coordinate efforts.

**2. Identify all health care facilities included in the network.**

See list in Attachment 1.

**3. Network Narrative: In the first quarterly report following the completion of the competitive bidding process and the selection of vendors, the selected participant must submit an updated technical description of the communications network that it intends to implement, which takes into account the results its network design studies and negotiations with its vendors. This technical description should provide, where applicable:**

*a. Brief description of the backbone network of the dedicated health care network, e.g., MPLS network, carrier-provided VPN, a SONET ring;*

The network backbone consists of several types of technologies. These technologies include carrier-provided circuits (either clear-channel T1s or IP Data Services) with VPN tunnels, newly installed fiber optics for cross-connection into the existing State

backbone with wave division multiplexing, short-haul wireless links, and some other possible technologies which are being considered.

*b. Explanation of how health care provider sites will connect to (or access) the network, including the access technologies/services and transmission speeds;*

Contracts have been established to build out parts of the network to eligible health care providers. We continue to finalize additional contracts to build the network as well as authorizing other RFP's/IFB's with USAC. The contracts have/will establish T-1 links running at a minimum of 1.544Mbps. Some HCP's will utilize one (1) T-1 while other sites will utilize multiple T-1's.

The RFP's/IFB's will help to determine the optimal option for connecting via fiber, point-to-point leased services, or short range wireless technologies. These technologies provide various transmission speeds and will be dependant on the needs of the individual sites.

*c. Explanation of how and where the network will connect to a national backbone such as NLR or Internet2;*

We are not able to identify all of the health care providers that are or will be connected to the Internet2 and therefore at this time we will not plan for network connection to Internet2. Currently there are no organizational relationships between PBTDN sites and Internet2 health care providers. This is something we hope to pursue more in the future.

*d. Number of miles of fiber construction, and whether the fiber is buried or aerial;*

The length of fiber construction is being analyzed along with the feasibility of both buried and aerial fiber and will be addressed after considering the options proposed as a response to the RFPs.

*e. Special systems or services for network management or maintenance (if applicable) and where such systems reside or are based.*

Cross-connections to sites will transit several organizational networks due to the large number of participating sites. Each major system that is participating will manage and maintain portions of the network as appropriate. Final responsibilities are to be determined.

**4. List of Connected Health Care Providers: Provide information below for all eligible and non-eligible health care provider sites that, as of the close of the most recent reporting period, are connected to the network and operational.**

*a. Health care provider site;*
Molokai General Hospital

*b. Eligible provider (Yes/No);*
Yes

*c. Type of network connection (e.g., fiber, copper, wireless);*
Leased 10Mbps Service

*d. How connection is provided (e.g., carrier-provided service; self-constructed; leased facility);*

Carrier-provided service

e. *Service and/or speed of connection (e.g., DS1, DS3, DSL, OC3, Metro Ethernet (10 Mbps);*
   Metro Ethernet 10Mbps

f. *Gateway to NLR, Internet2, or the Public Internet (Yes/No);*
   No
   Federal Communications Commission FCC 07-19874

g. *Site Equipment (e.g., router, switch, SONET ADM, WDM), including manufacturer name and model number.*
   NA – utilized existing equipment, no funds were used for equipment

h. *Provide a logical diagram or map of the network.*

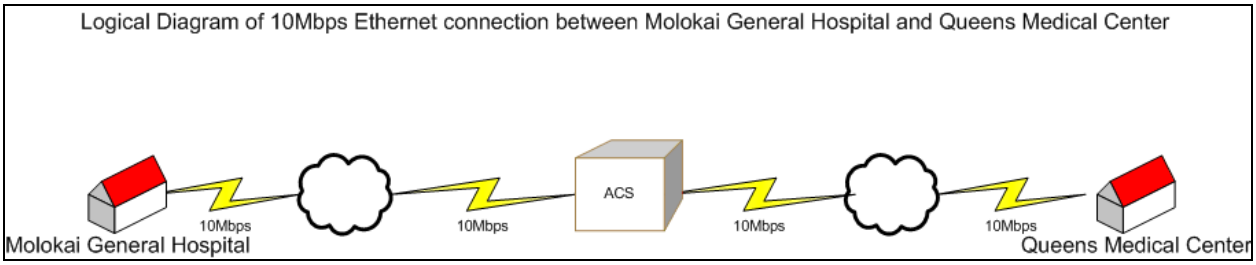


---

a. *Health care provider site;*
   Physicians Center at Mililani

i. *Eligible provider (Yes/No);*
   Yes

j. *Type of network connection (e.g., fiber, copper, wireless);*
   Leased Carrier Service

k. *How connection is provided (e.g., carrier-provided service; self-constructed; leased facility);*
   Carrier-provided service

l. *Service and/or speed of connection (e.g., DS1, DS3, DSL, OC3, Metro Ethernet (10 Mbps);*
   (2) T1 @ 1.544Mbps each

m. *Gateway to NLR, Internet2, or the Public Internet (Yes/No);*
   No
   Federal Communications Commission FCC 07-19874

n. *Site Equipment (e.g., router, switch, SONET ADM, WDM), including manufacturer name and model number.*
   Cisco 2921 Router

*o. Provide a logical diagram or map of the network.*

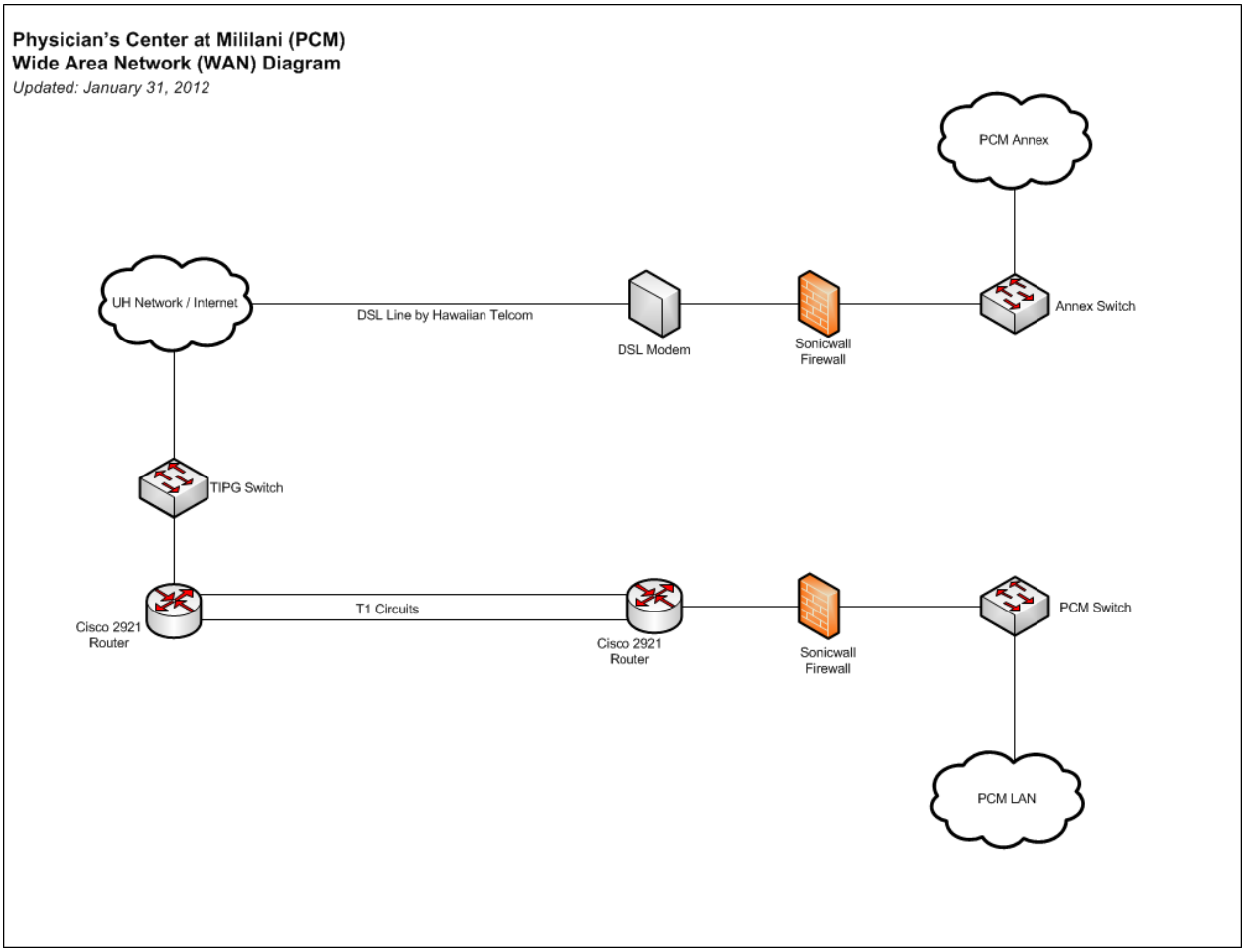


---

*a. Health care provider site;*

Hawaii Health Systems Corporation (HHSC):

Leahi Hospital,
Maluhia Hosptial,
Kahuku Hospital,
Lanai Hospital,
Hale Hoola Hamakua,
Kohala Hospital,
West Kauai Medical Center,
Samuel Mahelona Memorial Hospital,
West Kauai Clinic – Kalaheo,
West Kauai Clinic – Port Allen,
Maui Memorial Medical Center,
Kula Hospital,
Kona Community Hospital,
Hilo Medical Center, and
Kau Hospital.

*b. Eligible provider (Yes/No);*

Yes

c. *Type of network connection (e.g., fiber, copper, wireless);*

Leased carrier services

d. *How connection is provided (e.g., carrier-provided service; self-constructed; leased facility);*

Carrier-provided service

e. *Service and/or speed of connection (e.g., DS1, DS3, DSL, OC3, Metro Ethernet (10 Mbps);*

Hawaii Health Systems Corporation (HHSC):

Leahi Hospital – (2) Channelized DS3 @ 45Mbps each
Maluhia Hosptial – (2) T1 @ 1.544Mbps each
Kahuku Hospital – (2) T1 @ 1.544Mbps each
Lanai Hospital – (1) T1 @ 1.544Mbps each
Hale Hoola Hamakua – (1) T1 @ 1.544Mbps each
Kohala Hospital – (1) T1 @ 1.544Mbps each
West Kauai Medical Center – (3) T1 @ 1.544Mbps each
Samuel Mahelona Memorial Hospital – (2) T1 @ 1.544Mbps each
West Kauai Clinic – Kalaheo – (1) T1 @ 1.544Mbps each
West Kauai Clinic – Port Allen – (1) T1 @ 1.544Mbps each
Maui Memorial Medical Center – (6) T1 @ 1.544Mbps each
Kula Hospital – (1) T1 @ 1.544Mbps each
Kona Community Hospital – (4) T1 @ 1.544Mbps each
Hilo Medical Center – (4) T1 @ 1.544Mbps each
Kau Hospital – (1) T1 @ 1.544Mbps each

f. *Gateway to NLR, Internet2, or the Public Internet (Yes/No);*

No
Federal Communications Commission FCC 07-19874

g. *Site Equipment (e.g., router, switch, SONET ADM, WDM), including manufacturer name and model number;*

CISCO ASR 1002 Router, Cisco ASR 1000 Router, Cisco Catalyst Metro Ethernet Switch, Sorrento SN-LXB11319 DWDM Switch.

*h. Provide a logical diagram or map of the network;*

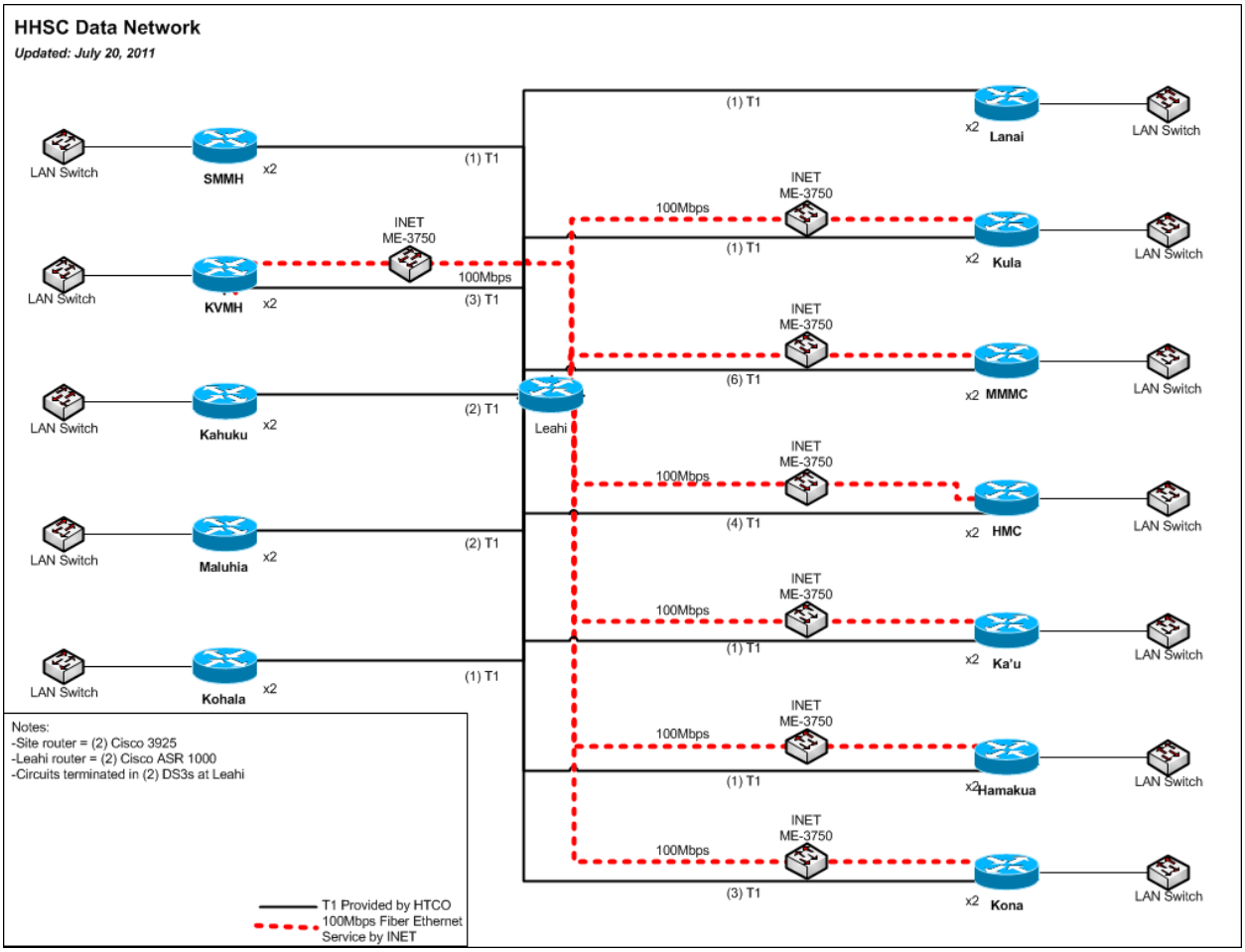


---

*a. Health care provider site:*

Hui Malama Na O'iwi

- Hui Malama Na O'iwi Admin & Health
- Hui Malama Na O'iwi Hilo
- Hui Malama Na O'iwi Kona
- Hui Malama Na O'iwi Naalehu
- Hui Malama Na O'iwi Pahoa
- Hui Malama Na O'iwi Waimea

*b. Eligible provider (Yes/No);*

Yes

*c. Type of network connection (e.g., fiber, copper, wireless);*

Leased Carrier T1 Services

*d. How connection is provided (e.g., carrier-provided service; self-constructed; leased facility);*

Carrier-provided service

*e. Service and/or speed of connection (e.g., DS1, DS3, DSL, OC3, Metro Ethernet (10 Mbps);*

Hui Malama Na O'iwi – 10Mbps Internet Service

Hui Malama Na O'iwi Admin & Health – (1) T1 @ 1.544Mbps each
Hui Malama Na O'iwi Hilo – (1) T1 @ 1.544Mbps each
Hui Malama Na O'iwi Kona – (1) T1 @ 1.544Mbps each
Hui Malama Na O'iwi Naalehu – (1) T1 @ 1.544Mbps each
Hui Malama Na O'iwi Pahoa – (1) T1 @ 1.544Mbps each
Hui Malama Na O'iwi Waimea – (1) T1 @ 1.544Mbps each

f. *Gateway to NLR, Internet2, or the Public Internet (Yes/No);*

No
Federal Communications Commission FCC 07-19874

g. *Site Equipment (e.g., router, switch, SONET ADM, WDM), including manufacturer name and model number;*

Cisco 2921 Router, Cisco 3925 Router, Cisco EtherSwitch.

*h. Provide a logical diagram or map of the network;*

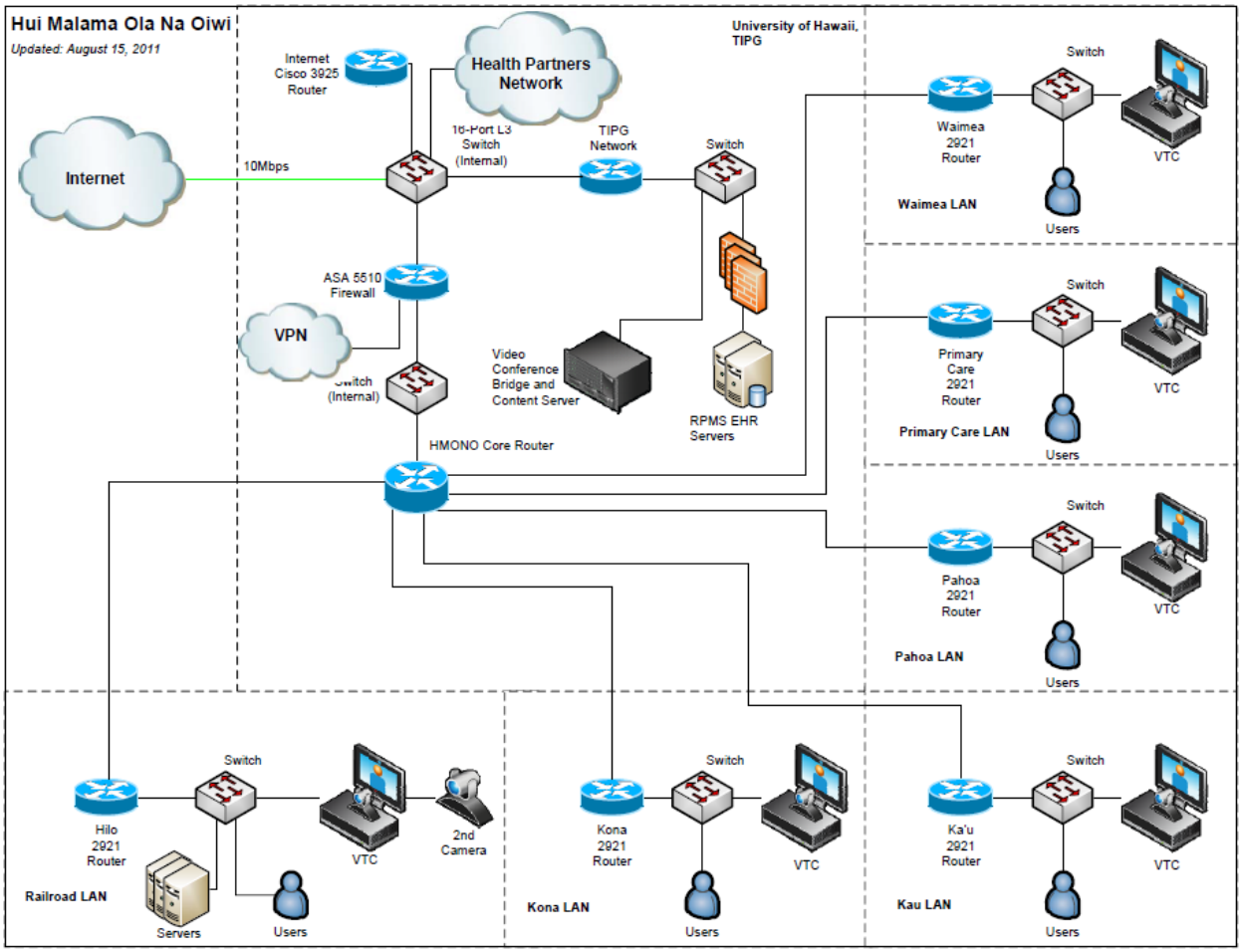


---

a. *Health care provider site:*

Bay Clinic, Inc.

Bay Clinic Hilo Family Health
Bay Clinic Family Health Center
Bay Clinic Kau Family Health Center
Bay Clinic Keeau Family Health Center

Bay Clinic Pahoa Family health Center
Bay Clinic Pahoa Women's Health Center

b. *Eligible provider (Yes/No);*
Yes

c. *Type of network connection (e.g., fiber, copper, wireless);*
Leased Carrier Service

d. *How connection is provided (e.g., carrier-provided service; self-constructed; leased facility);*
Carrier-provided service

*e. Service and/or speed of connection (e.g., DS1, DS3, DSL, OC3, Metro Ethernet (10 Mbps));*
Bay Clinic Hilo Family Health – 2 T1 @ 1.544Mbps each
Bay Clinic Family Health Center - 1 T1 @ 1.544Mbps each
Bay Clinic Kau Family Health Center - 1 T1 @ 1.544Mbps each
Bay Clinic Keeau Family Health Center – 2 T1 @ 1.544Mbps each
Bay Clinic Pahoa Family health Center - 1 T1 @ 1.544Mbps each
Bay Clinic Pahoa Women's Health Center - 1 T1 @ 1.544Mbps each

e. *Gateway to NLR, Internet2, or the Public Internet (Yes/No);*
No
Federal Communications Commission FCC 07-19874

f. *Site Equipment (e.g., router, switch, SONET ADM, WDM), including manufacturer name and model number*;
Cisco 1921 Router, Cisco 2911 Router

*h. Provide a logical diagram or map of the network;*

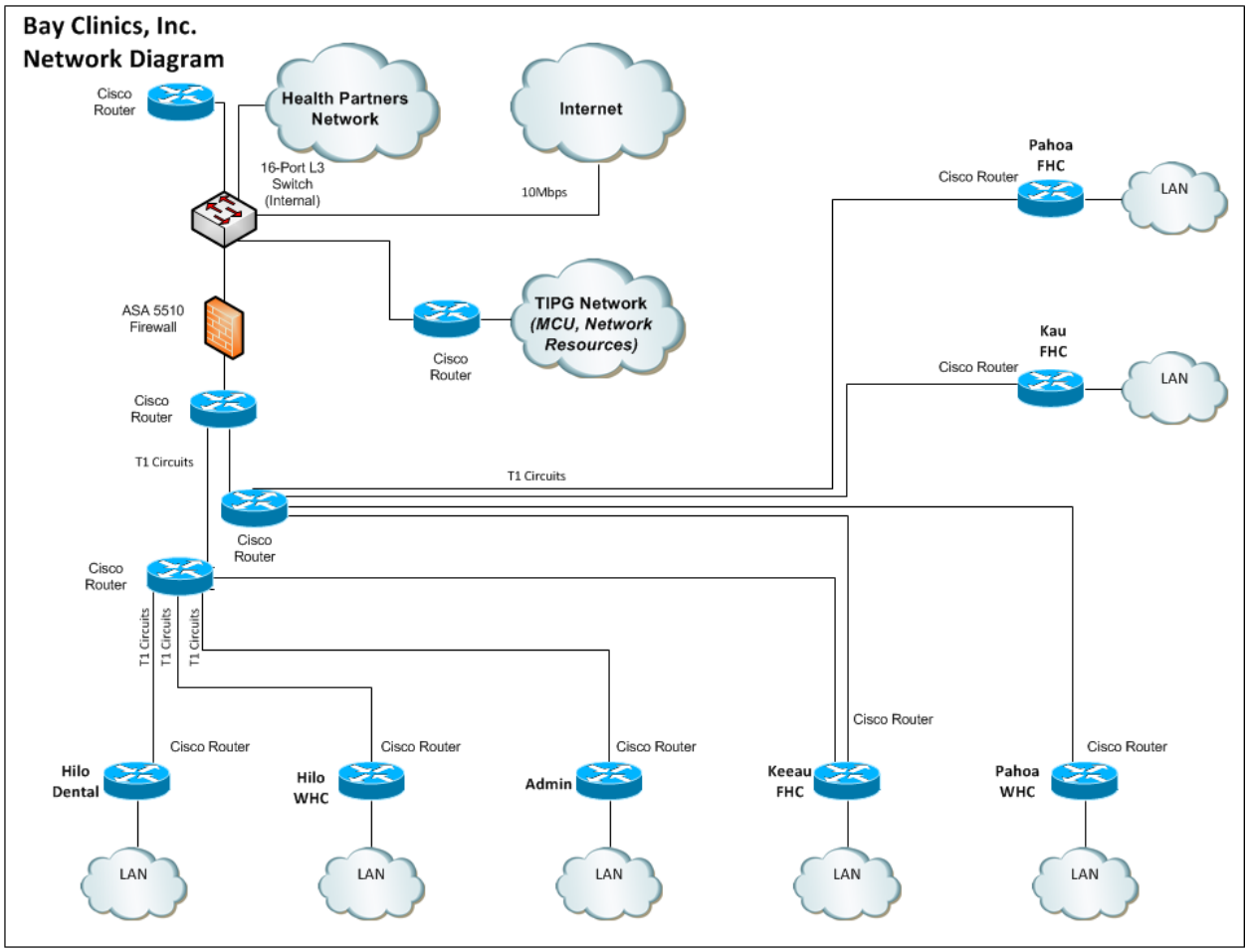


---

*a. Health care provider site;*

Public Safety Division

Halawa CCC – (2) T1 @ 1.455Mbps
Hale Nani – (1) T1 @ 1.455Mbps
Hawaii CCC – (1) T1 @ 1.455Mbps
Kauai CCC – (1) T1 @ 1.455Mbps
Oahu CCC – (2) T1 @ 1.455Mbps
Waiawa CCC – (1) T1 @ 1.455Mbps
Women's CCC – (1) T1 @ 1.455Mbps
PSD NOC – (2) DS3 @ 45Mbps

*p. Eligible provider (Yes/No);*

Yes

*q. Type of network connection (e.g., fiber, copper, wireless);*

Fiber
Leased Services

*r. How connection is provided (e.g., carrier-provided service; self-constructed; leased facility);*

No-cost leased facility

Leased Services

s. *Service and/or speed of connection (e.g., DS1, DS3, DSL, OC3, Metro Ethernet (10 Mbps);*

100Mbps Ethernet
T1s
DS3

t. *Gateway to NLR, Internet2, or the Public Internet (Yes/No);*

No
Federal Communications Commission FCC 07-19874

u. *Site Equipment (e.g., router, switch, SONET ADM, WDM), including manufacturer name and model number.*

Sorrento DWDM Equipment, Cisco 3925 Router

v. *Provide a logical diagram or map of the network.*

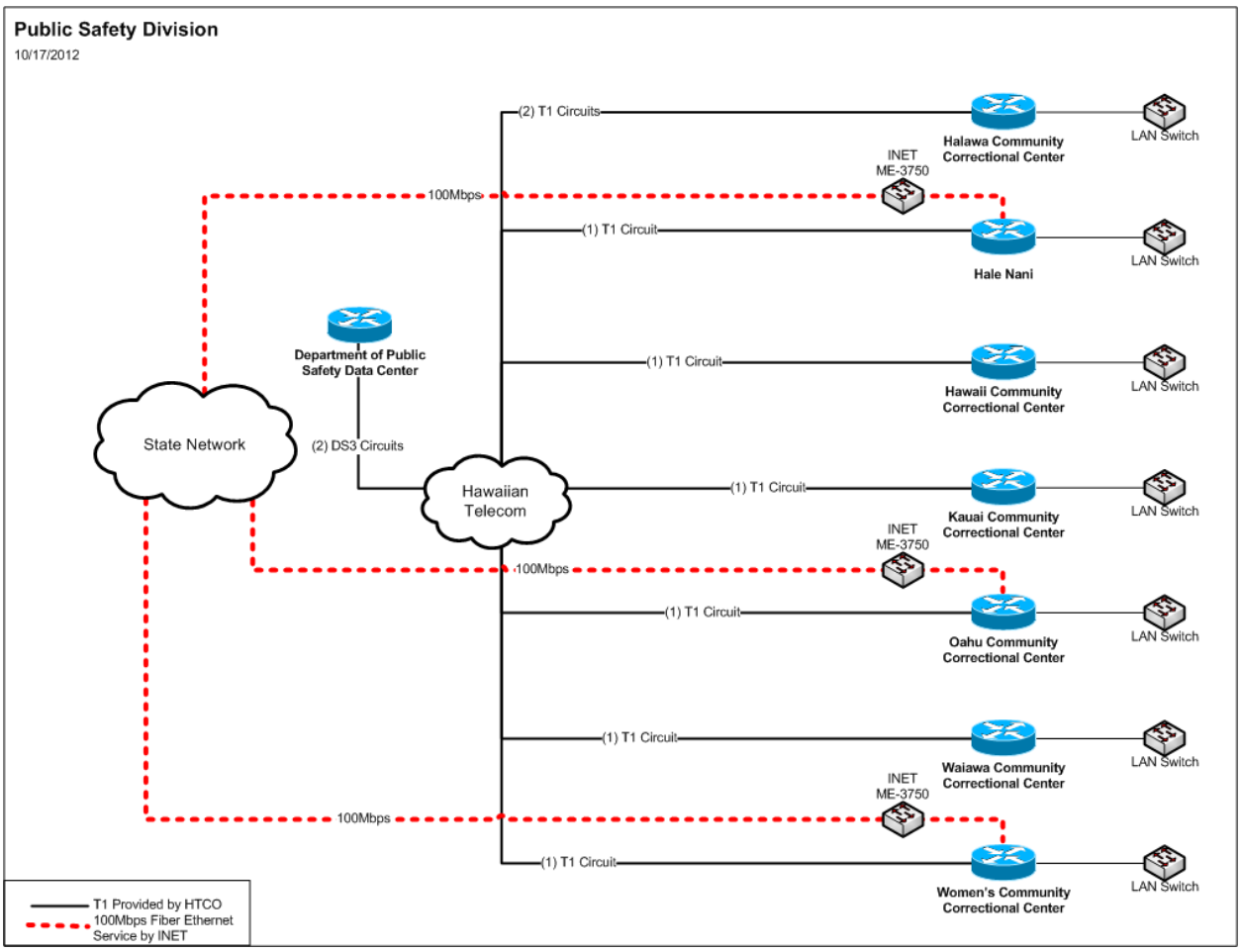


---

a. *Health care provider site;*

Kokua Kalihi Valley (KKV):

Charles Judd Community Health Center,
Elder Center
Kuhio Park Terrace Satellite Clinic
Kuhio Park Terrace Resource Center

Health and Wellness Center
Kalihi Valley Nature Park

b. *Eligible provider (Yes/No);*
Yes

c. *Type of network connection (e.g., fiber, copper, wireless);*
Leased carrier services

d. *How connection is provided (e.g., carrier-provided service; self-constructed; leased facility);*
Carrier-provided service

e. *Service and/or speed of connection (e.g., DS1, DS3, DSL, OC3, Metro Ethernet (10 Mbps);*
Kokua Kalihi Valley (KKV):
Charles Judd Community Health Center, - (2) T1 @ 1.544Mbps each
Elder Center – (1) T1 @ 1.544Mbps each
Kuhio Park Terrace Satellite Clinic – (1) T1 @ 1.544Mbps each
Kuhio Park Terrace Resource Center – (1) T1 @ 1.544Mbps each
Health and Wellness Center – (1) T1 @ 1.544Mbps each
Kalihi Valley Nature Park – (1) T1 @ 1.544Mbps each

f. *Gateway to NLR, Internet2, or the Public Internet (Yes/No);*
No
Federal Communications Commission FCC 07-19874

g. *Site Equipment (e.g., router, switch, SONET ADM, WDM), including manufacturer name and model number;*
CISCO ASR 1002 Router, Cisco ASR 1000 Router, Cisco Catalyst Metro Ethernet Switch, Sorrento SN-LXB11319 DWDM Switch.

h. *Provide a logical diagram or map of the network.*

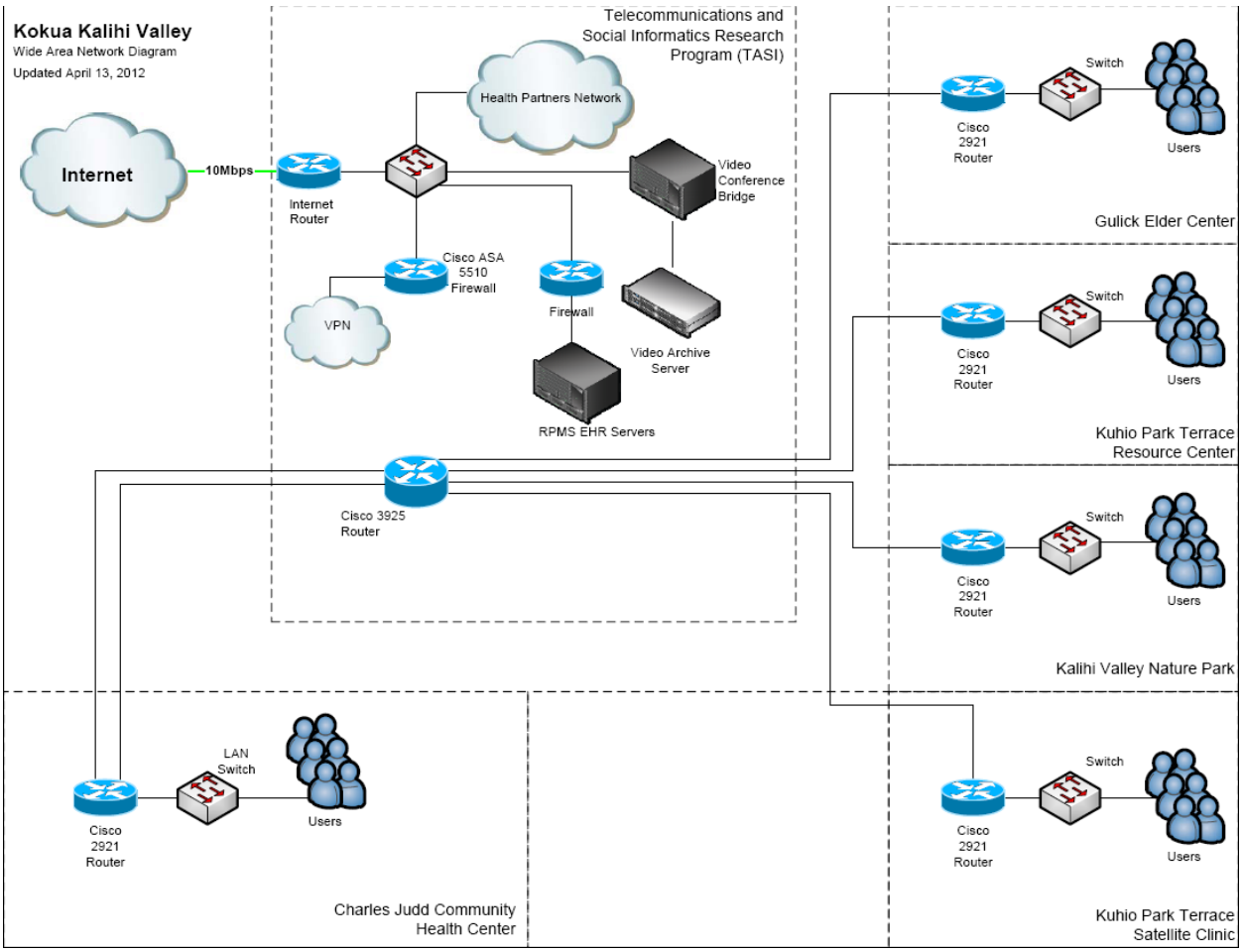


a. *Health care provider site;*
   Hui No Ke Ola Pono:
      Hana Maui

b. *Eligible provider (Yes/No);*
   Yes

c. *Type of network connection (e.g., fiber, copper, wireless);*
   Leased carrier services

d. *How connection is provided (e.g., carrier-provided service; self-constructed; leased facility);*
   Carrier-provided service

e. *Service and/or speed of connection (e.g., DS1, DS3, DSL, OC3, Metro Ethernet (10 Mbps);*
   Hui No Ke Ola Pono:
      Hana Maui – (1) T1 @ 1.544Mbps each

f. *Gateway to NLR, Internet2, or the Public Internet (Yes/No);*
   No
   Federal Communications Commission FCC 07-19874

g. *Site Equipment (e.g., router, switch, SONET ADM, WDM), including manufacturer name and model number;*

CISCO ASR 1002 Router, Cisco ASR 1000 Router, Cisco Catalyst Metro Ethernet Switch, Sorrento SN-LXB11319 DWDM Switch.

h. *Provide a logical diagram or map of the network.*

**Hui No Ke Ola Pono**

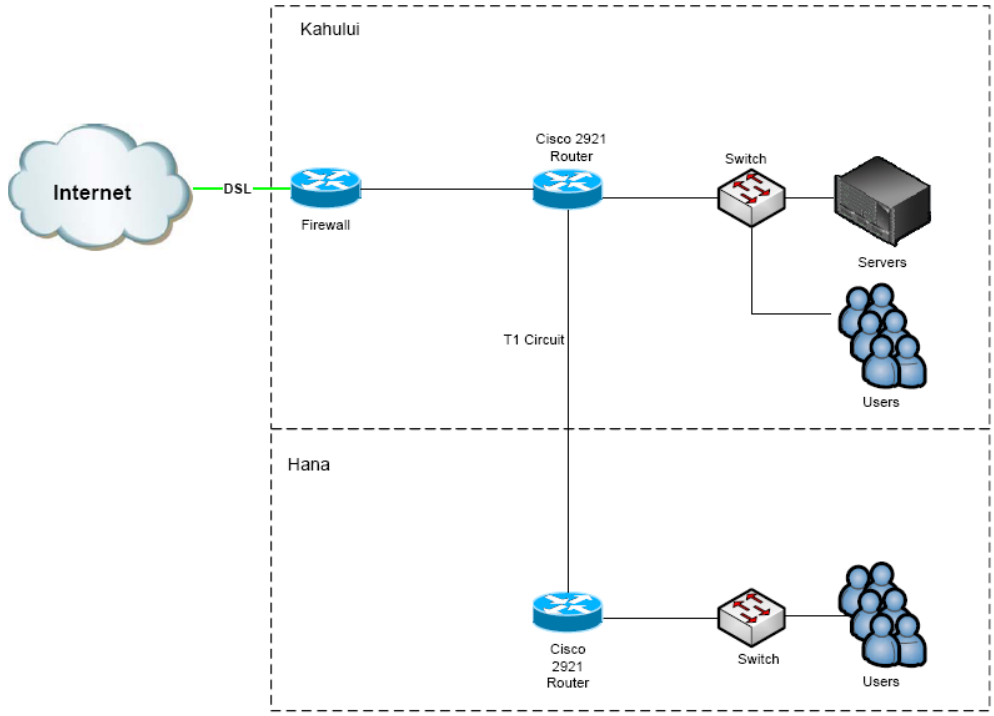


---

a. *Health care provider site;*

Hawaii State Department of Health:

- Diamond Head Health Center (DHHC)
- Kona Comm. Mental Health
- Lanakila Health Center
- Windward Health Center
- Kauai Comm. Mental Health
- Leeward Health Center
- Wailuku Health Center
- Hana Maui
- Hanapepe Health Center
- Hawaii Comm. Mental Health Center
- Honokaa Mental Health Center
- Honokaa Health Center
- Kalihi-Palama Family Guidance
- Hansens Hale Mohalu Hospital
- STD/AIDs
- STD/AID (728 Sunset)
- Kailua Family Guidance Center
- Kealakekua Health Office

Kapaa Health Center
Kohala Health Center
Molokai Health Center
Kona Health Center
Kona Health Center
DOH – Lanai Hospital
Kau Comm. Mental Health Center
Naalehu Health Center
Puna Comm. Mental Health Center
Wahiawa Community Mental Health Center
Ala Moana Health Center
Kinau Hale

b. *Eligible provider (Yes/No);*
Yes

c. *Type of network connection (e.g., fiber, copper, wireless);*
Leased carrier services

d. *How connection is provided (e.g., carrier-provided service; self-constructed; leased facility);*
Carrier-provided service

e. *Service and/or speed of connection (e.g., DS1, DS3, DSL, OC3, Metro Ethernet (10 Mbps);*
Hawaii State Department of Health:
DHHC – (1) 100Mbps
DHHC – (3) T1 @ 1.544Mbps each
Kona Comm. Mental Health – (3) T1 @ 1.544Mbps each
Lanakila Health Center - (2) T1 @ 1.544Mbps each
Windward Health Center - (2) T1 @ 1.544Mbps each
Kauai Comm. Mental Health - (2) T1 @ 1.544Mbps each
Leeward Health Center - (2) T1 @ 1.544Mbps each
Wailuku Health Center - (2) T1 @ 1.544Mbps each
Hana Maui - (1) T1 @ 1.544Mbps each
Hanapepe Health Center - (1) T1 @ 1.544Mbps each
Hawaii Comm. Mental Health Center - (1) T1 @ 1.544Mbps each
Honokaa Mental Health Center - (1) T1 @ 1.544Mbps each
Honokaa Health Center – (1) T1 @ 1.544Mbps each
Kalihi-Palama Family Guidance - (1) T1 @ 1.544Mbps each
Hansens Hale Mohalu Hospital - (1) T1 @ 1.544Mbps each
STD/AIDs - (1) T1 @ 1.544Mbps each
STD/AID (728 Sunset) - (1) T1 @ 1.544Mbps each
Kailua Family Guidance Center - (1) T1 @ 1.544Mbps each
Kealakekua Health Office - (1) T1 @ 1.544Mbps each
Kapaa Health Center - (1) T1 @ 1.544Mbps each
Kohala Health Center - (1) T1 @ 1.544Mbps each
Molokai Health Center - (1) T1 @ 1.544Mbps each
Kona Health Center - (1) T1 @ 1.544Mbps each
Kona Health Center - (1) T1 @ 1.544Mbps each
DOH – Lanai Hospital - (1) T1 @ 1.544Mbps each
Kau Comm. Mental Health Center - (1) T1 @ 1.544Mbps each
Naalehu Health Center - (1) T1 @ 1.544Mbps each
Puna Comm. Mental Health Center - (1) T1 @ 1.544Mbps each
Wahiawa Community Mental Health Center - (1) T1 @ 1.544Mbps each

Ala Moana Health Center - (1) T1 @ 1.544Mbps each
Kinau Hale - (2) DS3 @ 45Mbps each

f. *Gateway to NLR, Internet2, or the Public Internet (Yes/No);*
No
Federal Communications Commission FCC 07-19874

g. *Site Equipment (e.g., router, switch, SONET ADM, WDM), including manufacturer name and model number;*
CISCO ASR 1002 Router, Cisco ASR 1000 Router, Cisco Catalyst Metro Ethernet Switch, Sorrento SN-LXB11319 DWDM Switch.

h. *Provide a logical diagram or map of the network.*

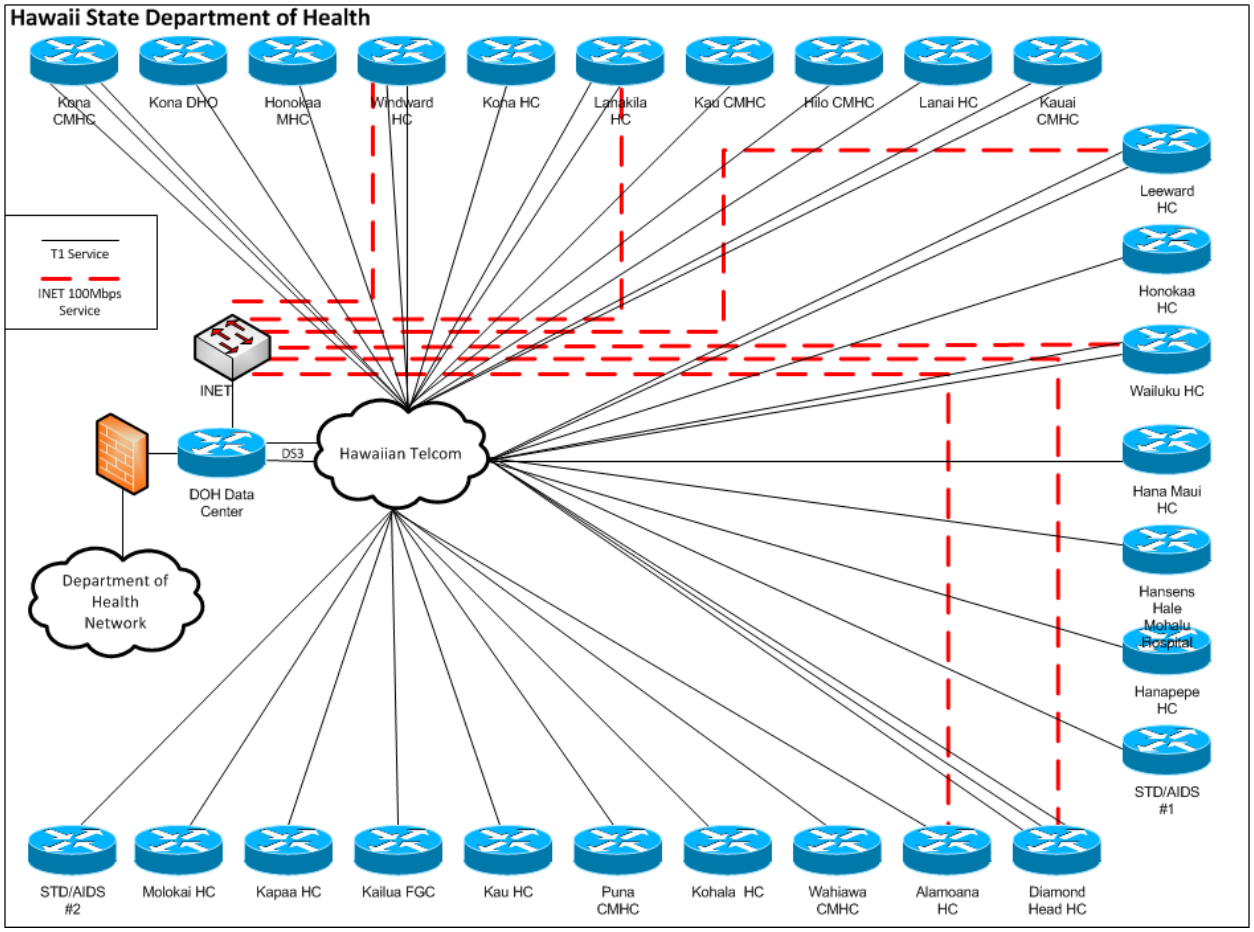

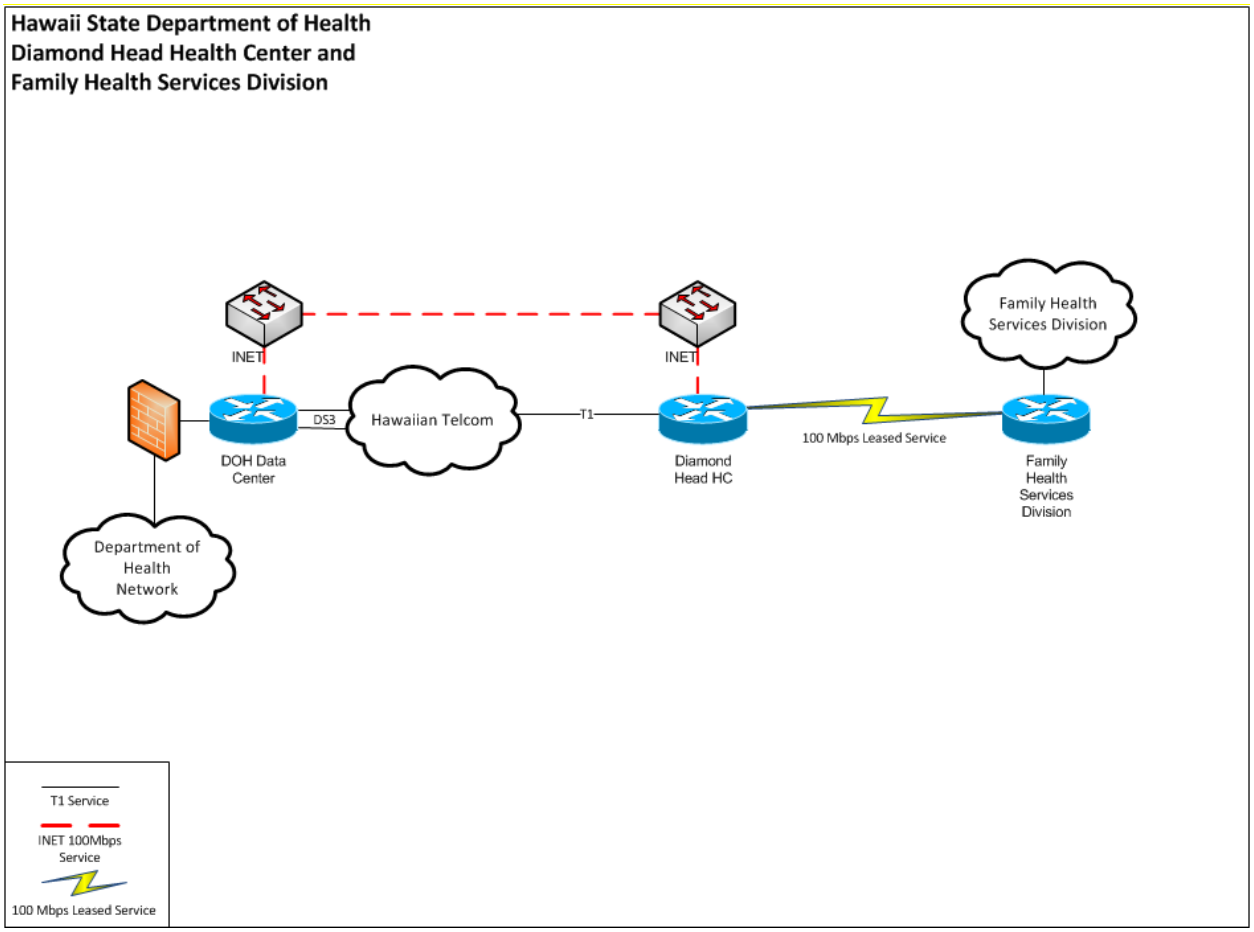


a. *Health care provider site;*
   Guam Memorial Hospital

b. *Eligible provider (Yes/No);*
   Yes

c. *Type of network connection (e.g., fiber, copper, wireless);*
   N/A

d. *How connection is provided (e.g., carrier-provided service; self-constructed; leased facility);*
   N/A

e. *Service and/or speed of connection (e.g., DS1, DS3, DSL, OC3, Metro Ethernet (10 Mbps);*
   N/A

f. *Gateway to NLR, Internet2, or the Public Internet (Yes/No);*
   No
   Federal Communications Commission FCC 07-19874

g. *Site Equipment (e.g., router, switch, SONET ADM, WDM), including manufacturer name and model number.*
   Network Switches, Routers and warranty

*h. Provide a logical diagram or map of the network.*
A network diagram will be provided in the next report.

---

*a. Health care provider site;*
Commonwealth Healthcare Corporation

b. *Eligible provider (Yes/No);*
Yes

c. *Type of network connection (e.g., fiber, copper, wireless);*
N/A

d. *How connection is provided (e.g., carrier-provided service; self-constructed; leased facility);*
N/A

*e. Service and/or speed of connection (e.g., DS1, DS3, DSL, OC3, Metro Ethernet (10 Mbps);*
N/A

*f. Gateway to NLR, Internet2, or the Public Internet (Yes/No);*
No
Federal Communications Commission FCC 07-19874

g. *Site Equipment (e.g., router, switch, SONET ADM, WDM), including manufacturer name and model number.*
Network Switches, Routers and warranty

*h. Provide a logical diagram or map of the network.*
A network diagram will be provided in the next report.

---

*a. Health care provider site;*
Guam Department of Health and Social Services

b. *Eligible provider (Yes/No);*
Yes

c. *Type of network connection (e.g., fiber, copper, wireless);*
N/A

d. *How connection is provided (e.g., carrier-provided service; self-constructed; leased facility);*
N/A

*e. Service and/or speed of connection (e.g., DS1, DS3, DSL, OC3, Metro Ethernet (10 Mbps);*
N/A

*f. Gateway to NLR, Internet2, or the Public Internet (Yes/No);*
No

g. *Site Equipment (e.g., router, switch, SONET ADM, WDM), including manufacturer name and model number.*
Network Switches, Routers and warranty

h. *Provide a logical diagram or map of the network.*
A network diagram will be provided in the next report.

---

**5. Identify the following non-recurring and recurring costs, where applicable shown both as budgeted and actually incurred for the applicable quarter and funding year to-date.**

a. *Network Design:*
Molokai General Hospital

b. *Network Equipment, including engineering and installation:*
Installation One Time Charge of $3,750.00

c. *Infrastructure Deployment/Outside Plant:*
NA

d. *Internet2, NLR, or Public Internet Connection:*
Point-to-Point Service

e. *Leased Facilities or Tariffed Services:*
Monthly Recurring Charge of $1,400.00

f. *Network Management, Maintenance, and Operation Costs (not captured elsewhere):*
NA

g. *Other Non-Recurring and Recurring Costs:*
NA

---

a. *Network Design:*
Physicians Center at Mililani

b. *Network Equipment, including engineering and installation:*
$9,518.68

c. *Infrastructure Deployment/Outside Plant:*
NA

d. *Internet2, NLR, or Public Internet Connection:*
Point-to-Point Service

e. *Leased Facilities or Tariffed Services:*
Monthly Recurring Charge of $437.94

f. *Network Management, Maintenance, and Operation Costs (not captured elsewhere):*
NA

*g. Other Non-Recurring and Recurring Costs:*
NA

---

*a. Network Design:*
Hawaii Health Systems Corporation (HHSC):
Leahi Hospital,
Maluhia Hosptial,
Kahuku Hospital,
Lanai Hospital,
Hale Hoola Hamakua,
Kohala Hospital,
West Kauai Medical Center,
Samuel Mahelona Memorial Hospital,
West Kauai Clinic – Kalaheo,
West Kauai Clinic – Port Allen,
Maui Memorial Medical Center,
Kula Hospital,
Kona Community Hospital,
Hilo Medical Center, and
Kau Hospital.

*b. Network Equipment, including engineering and installation:*
$547,785.62

*c. Infrastructure Deployment/Outside Plant:*
NA

*d. Internet2, NLR, or Public Internet Connection:*
Point-to-Point Service

*e. Leased Facilities or Tariffed Services:*
Monthly Recurring Charge of $11,622.84

*f. Network Management, Maintenance, and Operation Costs (not captured elsewhere):*
NA

*g. Other Non-Recurring and Recurring Costs:*
NA

---

*h. Network Design:*
Hui Malama Ola Na O'iwi:
Hui Malama Na O'iwi Admin & Health
Hui Malama Na O'iwi Hilo
Hui Malama Na O'iwi Kona
Hui Malama Na O'iwi Naalehu
Hui Malama Na O'iwi Pahoa
Hui Malama Na O'iwi Waimea

*b. Network Equipment, including engineering and installation:*
$41,004

*c. Infrastructure Deployment/Outside Plant:*
NA

*d. Internet2, NLR, or Public Internet Connection:*
Point-to-Point Service

*e. Leased Facilities or Tariffed Services:*
Monthly Recurring Charge of $4,739.53

*g. Network Management, Maintenance, and Operation Costs (not captured elsewhere):*
NA

*h. Other Non-Recurring and Recurring Costs:*
NA

---

*a. Network Design:*
Bay Clinic
- Bay Clinic Hilo Family Health
- Bay Clinic Family Health Center
- Bay Clinic Kau Family Health Center
- Bay Clinic Keeau Family Health Center
- Bay Clinic Pahoa Family health Cente
- Bay Clinic Pahoa Women's Health Center

*b. Network Equipment, including engineering and installation:*
$127,472.22

*c. Infrastructure Deployment/Outside Plant:*
NA

*d. Internet2, NLR, or Public Internet Connection:*
Point-to-Point Service

*d. Leased Facilities or Tariffed Services:*
Monthly Recurring Charge of $3811.19

*e. Network Management, Maintenance, and Operation Costs (not captured elsewhere):*
NA

*f. Other Non-Recurring and Recurring Costs:*
NA

---

*a. Network Design:*
Public Safety Division
- Halawa CCC
- Hale Nani
- Hawaii CCC
- Kauai CCC
- Oahu CCC
- Waiawa CCC
- Women's CCC
- PSD NOC

*b. Network Equipment, including engineering and installation:*
$350,497.69

*c. Infrastructure Deployment/Outside Plant:*
$555,000

*d. Internet2, NLR, or Public Internet Connection:*
Point-to-Point Service

*e. Leased Facilities or Tariffed Services:*
NA

*f. Network Management, Maintenance, and Operation Costs (not captured elsewhere):*
$31,434.17

*g. Other Non-Recurring and Recurring Costs:*
NA

---

*a. Network Design:*
Kokua Kalihi Valley (KKV):
Charles Judd Community Health Center,
Elder Center
Kuhio Park Terrace Satellite Clinic
Kuhio Park Terrace Resource Center
Health and Wellness Center
Kalihi Valley Nature Park

*b. Network Equipment, including engineering and installation:*
$42,402.06

*c. Infrastructure Deployment/Outside Plant:*
$26,444

*d. Internet2, NLR, or Public Internet Connection:*
Point-to-Point Service

*d. Leased Facilities or Tariffed Services:*
Monthly Recurring Charge of $2413.56

*e. Network Management, Maintenance, and Operation Costs (not captured elsewhere):*
NA

*f. Other Non-Recurring and Recurring Costs:*
NA

---

*a. Network Design:*
Hui No Ke Ola Pono:
Hana Maui

*b. Network Equipment, including engineering and installation:*
$14898.60

*c. Infrastructure Deployment/Outside Plant:*
NA

*d. Internet2, NLR, or Public Internet Connection:*

Point-to-Point Service

*d. Leased Facilities or Tariffed Services:*
Monthly Recurring Charge of $654.59

*e. Network Management, Maintenance, and Operation Costs (not captured elsewhere):*
NA

*f. Other Non-Recurring and Recurring Costs:*
NA

---

*a. Network Design:*
*Hawaii State Department of Health*
DHHC
Kona Comm. Mental Health
Lanakila Health Center
Windward Health Center
Kauai Comm. Mental Health
Leeward Health Center
Wailuku Health Center
Hana Maui
Hanapepe Health Center
Hawaii Comm. Mental Health Center
Honokaa Mental Health Center
Honokaa Health Center
Kalihi-Palama Family Guidance
Hansens Hale Mohalu Hospital
STD/AIDs
STD/AID (728 Sunset)
Kailua Family Guidance Center
Kealakekua Health Office
Kapaa Health Center
Kohala Health Center
Molokai Health Center
Kona Health Center
Kona Health Center
DOH – Lanai Hospital
Kau Comm. Mental Health Center
Naalehu Health Center
Puna Comm. Mental Health Center
Wahiawa Community Mental Health Center
Ala Moana Health Center
Kinau Hale

*b. Network Equipment, including engineering and installation:*
$366,185.47

*c. Infrastructure Deployment/Outside Plant:*
Institutional Network Fiber Connectivity - $180,000

*d. Internet2, NLR, or Public Internet Connection:*
*Point-to-Point Service*

*e. Leased Facilities or Tariffed Services:*

Monthly Recurring Charge of $16,377.94

f. *Network Management, Maintenance, and Operation Costs (not captured elsewhere):*
$1423.88

g. *Other Non-Recurring and Recurring Costs:*
NA

---

a. *Network Design:*
Guam Memorial Hospital Authority

b. *Network Equipment, including engineering and installation:*
Equipment Costs - $23,405.89

c. *Infrastructure Deployment/Outside Plant:*
NA

d. *Internet2, NLR, or Public Internet Connection:*
Network Equipment

e. *Leased Facilities or Tariffed Services:*
*$0.00*

f. *Network Management, Maintenance, and Operation Costs (not captured elsewhere):*
NA

g. *Other Non-Recurring and Recurring Costs:*
NA

---

a. *Network Design:*
Commonwealth Healthcare Corporation

b. *Network Equipment, including engineering and installation:*
Equipment Costs - $62,243.35

c. *Infrastructure Deployment/Outside Plant:*
NA

d. *Internet2, NLR, or Public Internet Connection:*
Network Equipment

e. *Leased Facilities or Tariffed Services:*
*$0.00*

f. *Network Management, Maintenance, and Operation Costs (not captured elsewhere):*
NA

g. *Other Non-Recurring and Recurring Costs:*
NA

---

*a. Network Design:*
Guam Department of Health and Social Services

*b. Network Equipment, including engineering and installation:*
Equipment Costs - $73,505.38

*c. Infrastructure Deployment/Outside Plant:*
NA

*d. Internet2, NLR, or Public Internet Connection:*
Network Equipment

*e. Leased Facilities or Tariffed Services:*
*$0.00*

*f. Network Management, Maintenance, and Operation Costs (not captured elsewhere):*
NA

*g. Other Non-Recurring and Recurring Costs:*
NA

---

**6. Describe how costs have been apportioned and the sources of the funds to pay them:**

*a. Explain how costs are identified, allocated among, and apportioned to both eligible and ineligible network participants:*

All network participants are eligible healthcare facilities. Costs will be identified and apportioned according to the specific links, bandwidth, equipment, and applications required at each site.

*b. Describe the source of funds from:*

*i. Eligible Pilot Program network participants:*

Each site has or will appropriate matching funds for their share of network communication costs. In many cases the source of funds for sites have already been budgeted for communication costs which will be modified based on the final design of this project. In anticipation of the Pilot Program many sites have included funding in their operating budget to accommodate implementation and/or maintenance of telecommunication capacity provided under the Pilot Program.

In addition, and in particular to the State agencies, initial discussions and planning has taken place for securing project matching funds and potentially leveraging the PBTDP project with the American Reinvestment and Recovery Act funds for broadband initiatives.

Other participants have obtained non-profit funding as matching.

*ii. Ineligible Pilot Program network participants:*

There are no ineligible participants in our project.

*c. Show contributions from all other sources (e.g., local, state, and federal sources, and other grants):*

*i. Identify source of financial support and anticipated revenues that is paying for costs not covered by the fund and by Pilot Program participants:*

The University of Hawaii, together with key project partners, sought and received a funding proposal to purchase high definition bridging equipment and video codecs. These are ineligible cost items under the Pilot program. The grant was received from:

Rural Utilities Service (RUS), U.S. Department of Agriculture

*ii. Identify the respective amounts and remaining time for such assistance.*

RUS Grant:

a. To purchase 17- HD Video Codecs and MCU
b. Total Project Amount - $590,447 (31% Local Match)
c. Grant Period – October 1, 2008 to November 3, 2011

*d. Explain how the selected participant's minimum 15 percent contribution is helping to achieve both the selected participant's identified goals and objectives and the overarching goals of the Pilot Program:*

The participants' contribution will aid in establishing the network infrastructure to achieve the identified goals of the Pilot Project.

**7. Identify any technical or non-technical requirements or procedures necessary for ineligible entities to connect to the participant's network.**

NA – There are no ineligible participants in our project.

**8. Provide on update on the project management plan, detailing:**

*a. The project's current leadership and management structure and any changes to the management structure since the last data report;*

There are no changes to report.

*b. In the first quarterly report, the selected applicant should provide a detailed project plan and schedule. The schedule must provide a list of key project deliverables or tasks, and their anticipated completion dates. Among the deliverables, participants must indicate the dates when each health care provider site is expected to be connected to the network and operational. Subsequent quarterly reports should identify which project deliverables, scheduled for the previous quarter, were met, and which were not met. In the event a project deliverable is not achieved, or the work and deliverables deviate from the work plan, the selected participant must provide an explanation.*

Majority of the anticipated project sites have been connected to the PBTD.

**9. Provide detail on whether network is or will become self sustaining. Selected participants should provide an explanation of how network is self sustaining.**

Network sustainability will be achieved in several ways. First, the PBTDP will build on the existing State Telehealth Access Network that has a well established partnering fee structure for administration, network support and operations. This is maintained through partnering agreements between the STAN HCP sites and the UH TIPG. The UH TIPG serves as the Network Operations Center (NOC) with seven-day a week operations and technical support. The UH TIPG NOC also manages the network and video teleconference scheduling, emergency and end-user support. It is anticipated that the PBTDP will follow a similar sustainability structure however the Project Team will work with the Advisory Committee to design the most appropriate and fair cost recovery mechanism for the PBTDP network members.

The sustainability plan also incorporates the anticipated internal HCP cost saving from the implementation of this project. For example, under this project some sites will connect to the State of Hawaii's Institutional Network that in turn will eliminate monthly recurring telecommunication network costs. Some of the funds that are made available through this cost saving may be reallocated to cover the partnering fees, network maintenance and upgrade. Other cost savings involve the participation in the regular Rural Health Care Program. Many sites are eligible for this program but are not currently participating. An analysis is currently being conducted for each HCP site to determine the potential cost savings through network reconfiguration and RHCP participation. Initial analysis indicate that we will be able to support an increased capacity at a lower cost to the participating HCP sites and enable the continued operation of the network. Further cost savings may be achieved with network expansion; the cost of the Network Operations Center support may be distributed among more HCPs possibly lowering the partnering fee for individual HCPs.

Finally the increased network capacity, higher number of participants, and availability of sites allow for the introduction of additional telemedicine services which will contribute to the revenue of participants further enabling the continuation of network services.

**10. Provide detail on how the supported network has advanced telemedicine benefits:**

> Critical support of applications that include patient clinical records, medical imagery transfers and storage for cardiology, radiology and neurology; patient records and financial records for psychiatric and human service counseling; the continuing medical, nursing, and health education and training, including Grand Rounds; and web based information resources for patients and the community.

*a. Explain how the supported network has achieved the goals and objectives outlined in selected participant's Pilot Program application;*

*b. Explain how the supported network has brought the benefits of innovative telehealth and, in particular, telemedicine services to those areas of the country where the need for those benefits is most acute;*

*c. Explain how the supported network has allowed patients access to critically needed medical specialists in a variety of practices without leaving their homes or communities;*

*d. Explain how the supported network has allowed health care providers access to government research institutions, and/or academic, public, and private health care institutions that are repositories of medical expertise and information;*

*e. Explain how the supported network has allowed health care professional to monitor critically ill patients at multiple locations around the clock, provide access to advanced applications in continuing education and research, and/or enhanced the health care*

*community's ability to provide a rapid and coordinated response in the event of a national crisis.*

**11. Provide detail on how the supported network has complied with HHS health IT initiatives:**

See Point 10 above.

*a. Explain how the supported network has used health IT systems and products that meet interoperability standards recognized by the HHS Secretary;*

*b. Explain how the supported network has used health IT products certified by the Certification Commission for Healthcare Information Technology;*

*c. Explain how the supported network has supported the Nationwide Health Information Network (NHIN) architecture by coordinating activities with organizations performing NHIN trial implementations;*

*d. Explain how the supported network has used resources available at HHS's Agency for Healthcare Research and Quality (AHRQ) National Resource Center for Health Information Technology;*

*e. Explain how the selected participant has educated themselves concerning the Pandemic and All Hazards Preparedness Act and coordinated with the HHS Assistant Secretary for Public Response as a resource for telehealth inventory and for the implementation of other preparedness and response initiatives; and*

*f. Explain how the supported network has used resources available through HHS's Centers for Disease Control and Prevention (CDC) Public Health Information Network (PHIN) to facilitate interoperability with public health and emergency organizations.*

**12. Explain how the selected participants coordinated in the use of their health care networks with the Department of Health and Human Services (HHS) and, in particular, with its Centers for Disease Control and Prevention (CDC) in instances of national, regional, or local public health emergencies (e.g., pandemics, bioterrorism). In such instances, where feasible, explain how selected participants provided access to their supported networks to HHS, including CDC, and other public health officials.**

Preliminary conversations have begun on leveraging existing networks and systems for public health surveillance and the establishment of communicable and non-communicable disease registries.

Attachment 1
Pacific Broadband Telehealth Demonstration Project

| Organization | Location name | Address | City | State | Zip |
|---|---|---|---|---|---|
| AS Medical Center | LBJ Tropical Medical Center | PO Box LBJ | Pago Pago | American Samoa | 96799 |
| Bay Clinics Inc | Hilo Family Health Center | 1178 Kinoole Street | Hilo | Hawaii | 96720 |
| Bay Clinics Inc | Keeau Family Health Center | 16-192 Pilimua street | Keaau | Hawaii | 96749 |
| Bay Clinics Inc | Pahoa Family Health Center | 15-2866 Government Road | Pahoa | Hawaii | 96778 |
| Bay Clinics Inc | Kau Family Health Center | 95-5583 Mamalahoa Road | Naalehu | Hawaii | 96772 |
| CNMI DPH | Commonwealth Health Center | PO Box 500-409 | Saipan | MP | 96950 |
| DOH | Emergency Medical System Services Branch | 3650 Maunalei Ave | Honolulu | Hawaii | 96816 |
| DOH | Wailuku Health Center | 121 Mahalani Street | Wailuku | Hawaii | 96793 |
| DOH | Molokai Health Center | 65 Makaena Street | Kaunakakai | Hawaii | 96748 |
| DOH | Waiakea Complex | 1582 Kamehameha Ave | Hilo | Hawaii | 96720 |
| DOH | Leeward Health Center | 860 Fourth Ave | Pearl City | Hawaii | 96782 |
| DOH | Windward Health Center | 45-691 Keaahala Road | Kaneohe | Hawaii | 96744 |
| DOH | FHSD Office | 741A Sunset Ave | Honolulu | Hawaii | 96816 |
| DOH | Leeward Annex | 870 Fourth Street | Pearl City | Hawaii | 96782 |
| DOH | Case Management Service Branch | 88 Kanoelehua Ave | Hilo | Hawaii | 96720 |
| DOH | Hawaii County Community Mental Health Center | 37 Kekaulike Street | Hilo | Hawaii | 96720 |
| DOH | Hansens | 3650 Maunalei Ave | Honolulu | Hawaii | 96816 |
| DOH | Waimea Health Center | 67-5189 Kamamalu Street | Kamuela | Hawaii | 96743 |
| DOH | Kailua Family Guidance Center | 42-477 Kalanianaole Hwy | Kailua | Hawaii | 96734 |
| DOH | Honokaa Mental Health Center | 45-3380 Mamane Street | Honokaa | Hawaii | 96727 |
| DOH | Puna Community Mental Health Center | 15-2866 Government Main Road | Pahoa | Hawaii | 96788 |
| DOH | Kauai Community Mental Health Center | 3-3212 Kuhio Highway | Lihue | Hawaii | 96766 |
| DOH | Hana Maui | 5101 Uakea Road | Hana | Hawaii | 96713 |
| DOH | Lanai Hospital | 628 7th Ave | Lanai City | Hawaii | 96763 |
| DOH | Wahiawa Community Mental Health Center | 910 California Ave | Wahiawa | Hawaii | 96786 |
| DOH | Maui Family Guidance Center | 270 Waiehu Beach | Wailuku | Hawaii | 96793 |
| DOH | Kona Community Mental Health Center | 79-1020 Haukapila Road | Kealakekua | Hawaii | 96750 |
| DOH | Kalihi-Palama Family Guidance Center | 2045 Kam IV Road | Honolulu | Hawaii | 96819 |
| DOH | FHSD Early Intervention System | 1350 S King Street | Honolulu | Hawaii | 96813 |
| DOH | Hi County Community Mental Health Center | 136 Kinoole Street | Hilo | Hawaii | 96720 |
| DOH | Waimea Family Guidance Center | 65-1230 Mamalahoa Hwy | Kamuela | Hawaii | 96743 |
| DOH | Kona District Health Office | 81-980 Halekii | Kailua-Kona | Hawaii | 96740 |
| DOH | BT CMIS DDD Office | 210 Imi Kala drive | Wailuku | Hawaii | 96793 |
| DOH | STD/AIDS | 3675 Kilauea Ave | Honolulu | Hawaii | 96816 |
| DOH | STD/AIDS | 728 Sunset Ave | Honolulu | Hawaii | 96816 |
| DOH | Kapaa Health Center | 4491 Kou Street | Kapaa | Hawaii | 96746 |

Attachment 1
Pacific Broadband Telehealth Demonstration Project

| Organization | Location name | Address | City | State | Zip |
|---|---|---|---|---|---|
| DOH | Hanapepe Health Center | 11-3756 Kaumualii Hwy | Hanapepe | Hawaii | 96716 |
| DOH | Kau Health Center | 95-5669 Mamalahoa Hwy | Naalehu | Hawaii | 96772 |
| DOH | Kohala Health Center | 54-3900 Akone Pule hwy | Kapaau | Hawaii | 96755 |
| DOH | Honokaa Health Center | 45-3380 Mamane Street | Honokaa | Hawaii | 96727 |
| DOH | Kinau Hale | 1250 Punchbowl Street | Honolulu | Hawaii | 96813 |
| DOH | Lanakila Health Center | 1700 Lanikila Ave | Honolulu | Hawaii | 96817 |
| DOH | Diamond Head Health Center | 3627 Kilauea Ave | Honolulu | Hawaii | 96816 |
| DOH | Hawaii State Hospital | 45-710 Keaahala Road | Kaneohe | Hawaii | 96744 |
| DOH | State Laboratory Facility | 2725 Waimano Home Road | Pearl City | Hawaii | 96782 |
| DOH | DDD Case Management Office | 801 Dillingham Blvd | Honolulu | Hawaii | 96817 |
| DOH | Ala Moana Health Center | 591 Ala Moana | Honolulu | Hawaii | 96813 |
| DOH | Waimano DDD Service Branch | 2201 Waimano Home Road | Pearl City | Hawaii | 96782 |
| DOH | Kona Health Center | 79-1015 Haukapila Street | Kealakekua | Hawaii | 96750 |
| DOH | Kau Community Mental Health Center | 219-B Kaaliki Road | Naalehu | Hawaii | 96772 |
| GMHA | GMHA | 850 Gov. Carlos Camacho Rd | Tamunig | Guam | 96913 |
| GMHA | GMHA Skilled Nursing Unit | 499 North Sabana Dr | Barrigada | Guam | 96921 |
| HHSC | Hilo Medical Center | 1190 Waianuenue Ave | Hilo | Hawaii | 96720 |
| HHSC | Hale Hoola Hamakua | 45-547 Plumeria Street | Honokaa | Hawaii | 96727 |
| HHSC | Kau Hospital | 1 Kamani Street | Pahala | Hawaii | 96777 |
| HHSC | Kauai Veterans Memorial Hospital | 4643 Waimea Canyon Road | Waimea | Hawaii | 96796 |
| HHSC | Samuel Mahelona Memorial Hospital | 4800 Kawaihau Road | Kapaa | Hawaii | 96746 |
| HHSC | West Kauai Clinic - Waimea | 4643-B Waimea Canyon Dr | Waimea | Hawaii | 96796 |
| HHSC | West Kauai Clinic - Port Allen | 4353 Waialo Road | Eleele | Hawaii | 96705 |
| HHSC | West Kauai Clinic - Kalaheo | 4489 Papalina Road | Kalaheo | Hawaii | 96741 |
| HHSC | Maui Memorial Medical Center | 221 Mahalani Street | Wailuku | Hawaii | 96793 |
| HHSC | Kula Hospital | 204 Kula Hwy | Kula | Hawaii | 96793 |
| HHSC | Lanai Community Hospital | 628 Seventh Street | Lanai City | Hawaii | 96763 |
| HHSC | Maluhia Hospital | 1027 Hala Drive | Honolulu | Hawaii | 96817 |
| HHSC | Leahi Hospital | 3675 Kilauea Ave | Honolulu | Hawaii | 96816 |
| HHSC | Kahuku Hospital | 54-117 Pualalea Street | Kahuku | Hawaii | 96731 |
| HHSC | Kohala Hospital | 54-383 Hospital Road | Kapaau | Hawaii | 96755 |
| HHSC | Kona Community Hospital | 79-1019 Haukapila Street | Kealakekua | Hawaii | 96750 |
| Hoola Lahui Hawaii | Kauai Community Health Center - Waimea | 4643-B Waimea Canyon drive | Waimea | Hawaii | 96796 |
| Hoola Lahui Hawaii | Kauai Community Health Center - Kapaa | 4800-D Kawaihau Road | Kapaa | Hawaii | 96746 |
| HPH | Hawaii Pacific Health | 55 Merchant Street | Honolulu | Hawaii | 96813 |
| Hui Malama Ola Na Oiwi | Hui Malama Ola Na Oiwi: Primary Care Clinic | 45 Mohouli Street | Hilo | Hawaii | 96720 |

Attachment 1
Pacific Broadband Telehealth Demonstration Project

| Organization | Location name | Address | City | State | Zip |
|---|---|---|---|---|---|
| Hui Malama Ola Na Oiwi | Hui Malama Ola Na Oiwi: Hilo | 69 Railroad Ave | Hilo | Hawaii | 96720 |
| Hui Malama Ola Na Oiwi | Hui Malama Ola Na Oiwi: Pahoa | 15-2874 Old Pahoa Rd | Pahoa | Hawaii | 96778 |
| Hui Malama Ola Na Oiwi | Hui Malama Ola Na Oiwi: Naalehu | 25 Mamalahoa Hwy A | Naalehu | Hawaii | 96772 |
| Hui Malama Ola Na Oiwi | Hui Malama Ola Na Oiwi: Waimea | 64-1035 Mamalahoa Hwy | Kamuela | Hawaii | 96743 |
| Hui Malama Ola Na Oiwi | Hui Malama Ola Na Oiwi: Kona | 82-6127 Mamalahoa Hwy | Captain Cook | Hawaii | 96740 |
| JABSOM Family Practice | Physicans Center at Mililani | 95-390 Kuahelani Ave | Mililani | Hawaii | 96789 |
| JABSOM Family Practice | UH Family Medicine Center at Hilo | 45 Mohouli Street | Hilo | Hawaii | 96720 |
| JABSOM Family Practice | Department of Medicine/Native Hawaiian Health/Family Medicine & Community Health, Gold Bond Building | 677 Ala Moana Blvd | Honolulu | Hawaii | 96813 |
| JABSOM Family Practice | Department of Geriatric Medicine, Kuakini Hospital | 347 North Kuakini St | Honolulu | Hawaii | 96817 |
| JABSOM Family Practice | Department of OBGYN/Pediatric Medicine, Kapiolani | 1319 Punahou St | Honolulu | Hawaii | 96826 |
| JABSOM Family Practice | University Tower, Queens Medical Center | 1356 Lusitana St | Honolulu | Hawaii | 96816 |
| Koolauloa | Koolauloa Health and Wellness Center - Kahuku Clinic | 56-119 Kamehameha Hwy | Kahuku | Hawaii | 96731 |
| Koolauloa | Koolauloa Health and Wellness Center - Hauula Clinic | 54-316 Kamehameha Hwy | Hauula | Hawaii | 96717 |
| NHCH | North Hawaii Community Hospital | 67-1125 Mamalahoa Hwy | Kamuela | Hawaii | 96743 |
| PSD | Hawaii Community Correctional Center | 60 Punahele Street | Hilo | Hawaii | 96720 |
| PSD | Kulani Community Correctional Center | HC 01 Stainback Hwy | Hilo | Hawaii | 96720 |
| PSD | Maui Community Correctional Center | 600 Waiale Drive | Wailuku | Hawaii | 96793 |
| PSD | Kauai Community Correctional Center | 5350 Kuhio Hwy | Lihue | Hawaii | 96766 |
| PSD | Oahu Community Correctional Center | 2199 Kamehameha Hwy | Honolulu | Hawaii | 96819 |
| PSD | Halawa Community Correctional Center | 99-902 Moanalua Rd | Aiea | Hawaii | 96701 |
| PSD | Womens Community Correctional Center | 42-477 Kalanianaole Hwy | Kailua | Hawaii | 96734 |
| PSD | Waiawa Community Correctional Center | 94-560 Kamehameha Hwy | Waipahu | Hawaii | 96797 |
| PSD | Hale Nani | 3200 Kanoelehua Ave | Hilo | Hawaii | 96720 |
| UOG | University of Guam | House 6 | Mangilao | Guam | 96923 |
| VA PIHS | VA Pacific Island Health Care System | 459 Paterson Road | Honolulu | Hawaii | 96819 |
| VA PIHS | American Samoa Community Based Outpatient Clinic | Fiatele Teo Army Reserve Bldg | Pago Pago | AS | 96799 |
| VA PIHS | Guam Community Based Outpatient Clinic | US Naval Hospital | Agana Heights | Guam | 96919 |
| Bay Clinics Inc | Bay Clinic Family Health Center | 95-5583 Mamalahoa Highway | Naalehu | Hawaii | 96772 |

Attachment 1
Pacific Broadband Telehealth Demonstration Project

| Organization | Location name | Address | City | State | Zip |
|---|---|---|---|---|---|
| Bay Clinics Inc | Pahoa Women's Health Center | 15-2866 Pahoa Village Road, Bldg F, Ste. A | Pahoa | Hawaii | 96778 |
| Hui No Ke Ola Pono, Inc. | Hui No Ke Ola Pono, Inc. | 95 Mahalani St., Rm 21 | Wailuku | Hawaii | 96793 |
| Hui No Ke Ola Pono, Inc. | Hui No Ke Ola Pono, Inc. (Hana Community Center) | 5101 Uakea Place | Hana | Hawaii | 96713 |
| Kokua Kalihi Valley | CHARLES JUDD COMMUNITY HEALTH CENTER | 2239 NORTH SCHOOL STREET | HONOLULU | Hawaii | 96819 |
| Kokua Kalihi Valley | ELDER CENTER | 1846 GULICK AVENUE | HONOLULU | Hawaii | 96819 |
| Kokua Kalihi Valley | KUHIO PARK TERRACE SATELLITE CLINIC | 1475 LINAPUNI STREET | HONOLULU | Hawaii | 96819 |
| Kokua Kalihi Valley | KUHIO PARK TERRACE RESOURCE CENTER | 1485 LINAPUNI STREET | HONOLULU | Hawaii | 96819 |
| Kokua Kalihi Valley | HEALTH AND WELLNESS CENTER | 2229 NORTH SCHOOL ST | HONOLULU | Hawaii | 96819 |
| Kokua Kalihi Valley | KALIHI VALLEY NATURE PARK | 3659 KALIHI STREET | HONOLULU | Hawaii | 96819 |