BINGHAM

Russell M. Blau
Direct Phone: 202.373.6035
Direct Fax: 202.373.6001
russell.blau@bingham.com

December 16, 2013

Via ECFS

Ms. Marlene H. Dortch, Secretary
Federal Communications Commission
445 12th Street, S.W.
Room TW-A325
Washington, D.C. 20554

Re: Official Descriptions of Contractor Function Codes
WC Docket No. 10-90

Dear Ms. Dortch:

The Wireline Competition Bureau recently requested sources for official descriptions of the contractor function codes shown on the invoices used for the development of U.S. Virgin Islands-specific unit costs. In response to this request, Virgin Islands Telephone Corporation d/b/a Innovative Telephone ("Vitelco"), by its undersigned counsel, respectfully provides the attached Rural Utilities Service ("RUS") Bulletins issued by the U.S. Department of Agriculture for definitions of the principal contractor functions used for Vitelco's unit cost analysis:

1. **RUS Bulletin 1753F-150 (RUS Form 515a), Specifications and Drawings for Construction of Direct Buried Plant** – This document contains the descriptions and specifications for various functions related to direct buried plant construction, including the following items included in the Vitelco analysis:
    a. **BM71 – Rock Excavating Unit** – A description of the rock excavation function is highlighted on Page 22;
    b. **BM72 – Asphalt Assembly Unit** – Descriptions of the labor and material functions necessary for the removal and restoration of asphalt pavement are highlighted on Page 22; and
    c. **BM73 – Concrete Assembly Unit** – Descriptions of the labor and material functions necessary for the removal and restoration of concrete pavement or any combination of concrete pavement and other surfacing material are highlighted on Page 22.
2. **RUS Bulletin 1753F-151 (RUS Form 515b), Specifications and Drawings for Construction of Underground Plant** – This document contains the descriptions and specifications for various functions related to underground plant construction, including the following items included in the Vitelco analysis:

Beijing
Boston
Frankfurt
Hartford
Hong Kong
London
Los Angeles
New York
Orange County
San Francisco
Santa Monica
Silicon Valley
Tokyo
Washington

Bingham McCutchen LLP
2020 K Street NW
Washington, DC
20006-1806

T +1.202.373.6000
F +1.202.373.6001
bingham.com

a. **HO – Fiber Optic Splicing Assembly Units –** A description of the labor and materials necessary to splice and/or test one (1) glass fiber is highlighted on Page 2;
b. **HU – Underground Splice Closure Assembly Units -** A description of the underground splice closure and closure encapsulating material, if required, installed in place and the labor and material for setting up in preparation for installing the closure is highlighted on Page 2;
c. **UD – Underground Conduit Assembly Units** – A description of the material and labor required for the placement of one (1) foot of single or multiduct conduit is highlighted beginning on Page 3; and
d. **UO – Underground Filled Fiber Optic Cable Assembly Units –** A description of the functions related to one (1) foot of filled fiber optic cable installed in underground conduit and manholes is shown on Page 8.

3. **RUS Bulletin 1753F-152 (RUS Form 515c), Specifications and Drawings for Construction of Aerial Plant** – This document contains the descriptions and specifications for various functions related to aerial plant construction, including the following items included in the Vitelco analysis:
   a. **A(xx)-x – Pole Units** – Consists of one (1) pole in place, as described on Page 1;
   b. **CO – Aerial Filled Fiber Optic Cable Assembly Units** – Consists of one (1) foot of filled fiber optic cable in place as described beginning on Page 2;
   c. **HA – Aerial Splice Closure Assembly Units** – A description of the aerial splice closure and closure encapsulating material, if required, installed in place and the labor and material for setting up in preparation for installing the closure is highlighted beginning on Page 4;
   d. **HO1 – Fiber Optic Fusion Splicing Assembly Units** – A description of the labor and materials necessary to splice and/or test one (1) glass fiber is highlighted beginning on Page 6;
   e. **PE – Guy Assembly Units –** Consists of strand and hardware, and insulators or ground connection where required, as described on Page 8; and
   f. **PF – Anchor Assembly Units –** Consists of the anchor with rod, complete and in place, ready for attaching the guy strand as described on Page 9.

Please do not hesitate to contact the undersigned with any questions.

Respectfully submitted,

/s/ Russell M. Blau

Russell M. Blau

Counsel for Virgin Islands Telephone Corporation

Exhibit A

RUS Bulletin 1753F-150 (RUS Form 515a)
Specifications and Drawings for Construction of Direct Buried Plant

United States
Department of
Agriculture

Rural
Utilities
Service

RUS Bulletin 1753F-150
RUS Form 515a

Date: September 30, 2010

Specifications and Drawings for Construction of Direct Buried Plant

This page intentionally left blank

UNITED STATES DEPARTMENT OF AGRICULTURE
Rural Utilities Service

BULLETIN 1753F-150

SUBJECT: Specifications and Drawings for Construction of Direct Buried Plant, RUS Form 515a

TO: All Telecommunications Borrowers and RUS Telecommunications Staff

EFFECTIVE DATE: September 29, 2010

OFFICE OF PRIMARY INTEREST: Technical Standards Branch, Advance Services Division.

AVAILABILITY: RUS Bulletin 1753F-150, Specifications and Drawings for Construction of Direct Buried Plant, RUS Form 515a, issued September 17, 2001, has been revised. The revised bulletin can be accessed via the Internet at http://www.usda.gov/rus/telecom/publications/bulletins.htm.

PURPOSE: This specification provides Contractors, Engineers, and RUS Borrowers with industry-created assembly unit descriptions, materials, construction and installation, and drawings for direct buried plant associated with RUS Form 515, Telecommunications System Construction Contract.

ACKNOWLEDGMENT: This revised bulletin was developed through a cooperative effort of the *Rural Utilities Service* (RUS) and the *515 Task Force* of the *Association of Communication Engineers* (ACE) which also includes members representing the *Power and Communication Contractors Association* (PCCA) and the Rural Standards Initiatives (RSI).

Jonathan Adelstein
Administrator
Rural Utilities Service

SEP 29 2010
Date

RUS Bulletin 1753F-150
Specifications and Drawings for Construction of Direct Buried Plant, RUS Form 515a

TABLE OF CONTENTS

Page

List of Changes 1
Part I – Description of Assembly Units and Proposal and Contract Sections 3
Part II – Specification for Materials 28
1 Scope 28
2 General 28
3 Stub Poles 28
4 Miscellaneous 28
Part III – Specification for Construction and Installations 28
1 General 28
2 Buried Plant Housing Stub Poles 29
3 Cable Splicing 29
4 Buried Cable or Wire 29
5 Buried Handholes 34
6 Miscellaneous – Buried Plant 35
7 Special Requirements for Installation of Serving Area Interface Cabinets (SAIC) 36
List of Construction Drawings and Plans 37

INDEX

CONSTRUCTION:
Buried Cable Plant
Fiber Optic Cable Plant
SPECIFICATIONS AND STANDARDS:
Outside Plant

LIST OF CHANGES

1 Modification of Section BA as follows:

(a) Redefined unit to indicate installation of all units must be in compliance with RUS BULLETIN 1728F-700, REA Specification for Wood Poles, Stubs and Anchor Logs.

2 Modification of Section BDO as follows:

(a) Redefined unit to indicate installation of all splicing or fiber termination hardware and accessories are included as necessary;

(b) Redefined unit to add housing sizes comparable to copper plant housings sizes: BDO3, BDO4, BDO5, BDO6, BDO7, BDO6000, BDO8000, BDO10000; and

(c) Added suffixes "C" for plastic cone mounted with crushed stone or gravel bed, "G" for pea gravel, "H" for handhole mounted with crushed stone or gravel bed, and "S" for poured in place sealant.

3 Modification of Section BDS, as follows:

(a) Redefined unit to include cross-connect modules, blocks, or bulkheads for FTTP; and

(b) Added suffixes "H" for handhole mounted with crushed stone or gravel bed and "S" for poured in place sealant.

4 Modification of the Section BFO, as follows:

(a) Redefined suffix "I" for buried cable, to be installed inside a duct placed by the contractor;

(b) Modified suffix " V( )( )" to "V(x)" with the first value in the V suffix parentheses must indicate the number of ducts by the second value specifying the inside diameter of the ducts in inches or millimeters; and

(c) Provided suffixes "H" for special conditions or instructions concerning the installation as determined by the Engineer, "IE" for buried cable to be installed inside an existing duct placed by others, "L" for adding a locate conductor to a dielectric cable, "R" for indicating cable of ribbon construction, and "W" for a 3" wide, orange warning tape, installed 18" above the cable.

5 Modification of the BM60 unit, as follows:

(a) To reflect installing buried plastic pipe as the standard installation practice for an entire project versus crossings only; and

(b) Provide suffixes "S" for steel pipe, "R" for specialized rock boring bit, and "RR" for larger specialized boring equipment.

6 Modification of the BM61 unit, as follows:

(a) To reflect providing a hole as the standard installation practice for service entrance cables versus crossings only.

7 Addition of miscellaneous assembly unit BM51, Fiber Optic Pre-connectorized Multiport Terminal Assembly Unit.

8 Modification of the Section HBF, as follows:

(a) Modified "HBFO( )" to "HBFO(-)" with the cable strand count and when necessary, pre-hyphenated by the number of identical cables to be housed in the closure. Ribbon type cables are identified by an attached "R" to the cable strand count within the parenthesis; and

(b) Provided suffix "S( )" for number of splices in the closure specified within the parenthesis.

9 Modification of the Section HO, as follows:

(a) Modified the section description for complete a ribbon fiber optic splice using mass splicing, to connect fiber-terminated ports using patch cords, and to terminate one optical splitter pigtail; and

(b) Provided suffix "HO4" for connecting a splitter pigtail, "HO5( )" for a fiber optic connection by patch cord, and "HO#R" for splicing a ribbon matrix cable assembly.

10 In Part II, section 1, clarified for purposes of this specification references to outside buried cables include fiber optic or copper type cables unless otherwise specified.

11 In Part II, section 4, added compliance to the RUS "Buy American" provision for items for which categories do not appear in RUS IP 344-2, "List of Materials Acceptable for Use on Telecommunications Systems of RUS Borrowers."

12 In Part III, section 4, added when placing cable or wire by horizontal directional drilling (HDD) or boring, the cable or wire bore route must be pre-planned and mapped for the most efficient path.

13 In Part III, section 4, added a underground pipe assembly unit (BM60( )) may use the "R" suffix for specialized rock boring or "RR" for heavy rock when specified for proper and acceptable use by the engineer prior to the bidding process. All underground or buried pipes must be properly capped with or without any cable or wire installed.

14 In Part III, section 4, added the minimum depth at subscriber premises, 12" (305 mm).

15 In Part III, sections 1-7, added miscellaneous language for the inclusion of FTTH.

For editorial or other minor technical changes, refer to the body of the document.

Part I - DESCRIPTION OF ASSEMBLY UNITS AND PROPOSAL AND CONTRACT SECTIONS

The Contractor's Proposal form is divided into sections and the sections approved for construction must be listed in the Construction Agreement by the Owner. The sections are as follows:

Section	BA	-	Buried Plant Housing Stub Pole Units
Section	BD	-	Buried Plant Housing Assembly Units
Section	BDO	-	Buried Plant Fiber Optic Housing Assembly Units
Section	BDS	-	Serving Area Interface Cabinet (SAIC) Assembly Units
Section	BFC	-	Buried Filled Copper Cable Assembly Units
Section	BFO	-	Buried Filled Fiber Optic Cable Assembly Units
Section	BH	-	Buried Handhole Assembly Units
Section	BM	-	Miscellaneous Assembly Units
Section	HBF	-	Buried Filled Splice Closure Assembly Units
Section	HC	-	Copper Splicing Assembly Units
Section	HO	-	Fiber Optic Splicing Assembly Units
Section	W	-	Rearrangement Units
Section	XX	-	Nonreusable Materials Removal Units
Section	XZ	-	Reusable Materials Removal Units

Each assembly unit includes only the materials listed on the corresponding Installation and Construction Guide Drawings or description of unit where no drawing exists. The various installation and construction units, which are included in this Proposal and upon which quotations are required, are defined by the following descriptions:

Section BA – BURIED PLANT HOUSING STUB POLE UNITS

Consists of all labor and material for a stub pole in place. Stub poles must be of the length and type designated by the Engineer as follows:

BA2	6.5 Feet [1.98 meters (m)], Round Wood Stub Pole
BA3	8.0 Feet (2.44 m), Round Wood Stub Pole
BA4	10.0 Feet (3.05 m), Round Wood Stub Pole
BA5	13.5 Feet (4.12 m), Round Wood Stub Pole
BA21	6.5 Feet (1.98 m), Sawn Wood Stub Pole
BA22	8.0 Feet (2.44 m), Sawn Wood Stub Pole
BA23	10.0 Feet (3.05 m), Sawn Wood Stub Pole

The stub pole plan, kind of preservative, and method of treatment are designated in the Proposal in compliance with Bulletin 1728F-700, *REA Specification for Wood Poles, Stubs and Anchor Logs*.

Section BD – BURIED PLANT HOUSING ASSEMBLY UNITS

Consists of a buried plant housing stake mounted in place. These units include all labor and material to install pea gravel, housing numbers, route letters, load point numbers, directional and other markings of buried filled copper cable, except as specifically provided for in other units. Includes all labor and material to install bonding connectors, harnesses, and grounding connector for terminating external ground wire, in accordance with RUS Splicing Standard Bulletin 1753F-401 (PC-2).

The assembly units are defined as follows:

BD3	Buried Plant Housing, Type H Stake-Mounted
BD4	Buried Plant Housing, Type H Stake-Mounted
BD5	Buried Plant Housing, Type H Stake-Mounted
BD7	Buried Plant Housing, Type H Stake-Mounted
BD14	Buried Plant Housing, Type M Stake-Mounted
BD15	Buried Plant Housing, Type M Stake-Mounted
BD16	Buried Plant Housing, Type M Stake-Mounted
BD6000	Buried Plant Housing, Large Count Stake-Mounted
BD8000	Buried Plant Housing, Large Count Stake-Mounted
BD10000	Buried Plant Housing, Large Count Stake-Mounted

Note: The splicing capacity must be in accordance with RUS Splicing Standard Bulletin 1753F-401(PC-2).

Options designated by the following suffixes apply:

Suffix	Description
A	Pole mounted (see guide drawing 905 when increased height is required). Pole compensated under BA units.
F	Concrete pad mounted. Pad compensated under BHF units.
H	Good-housekeeping panel.
P	Plastic pad mounted. Pad compensated under BHF units.
R	Crushed stone or gravel bed.

Examples:

BD3	BD3 housing stake mounted.
BD4AH	BD4 housing pole mounted and good-housekeeping panel.
BD14R	BD14 housing with crushed stone or gravel bed.
BD8000F	BD8000 housing, concrete pad mounted.

Section BDO – BURIED PLANT FIBER OPTIC HOUSING ASSEMBLY UNITS

Consists of a buried plant fiber optic housing stake mounted in place. These units include all the labor and material to install housing base material, housing numbers, route letters, and directional and other markings of buried fiber optic cable, except as specifically provided for in other units. Includes all labor and material to install all splicing, or splice case, or fiber termination hardware and accessories as necessary, bonding connectors, harnesses, and grounding connector for terminating external ground wire, in accordance with RUS Splicing Standard Bulletin 1753F-401 (PC-2).

The assembly units are defined as follows:

BDO3	Buried Plant Housing, Stake-Mounted
BDO4	Buried Plant Housing, Stake-Mounted
BDO5	Buried Plant Housing, Stake-Mounted
BDO6	Buried Plant Housing, Stake-Mounted
BDO7	Buried Plant Housing, Stake-Mounted
BDO6000	Large Buried Plant Housing, Stake-Mounted
BDO8000	Large Buried Plant Housing, Stake-Mounted
BDO10000	Large Buried Plant Housing, Stake-Mounted

Note: Type of hardware and accessories must be dependent upon the type of fiber optic connection(s), splicing, and/or splice case utilized.

Options designated by the following suffixes apply:

Suffix	Description
A	Pole mounted (see guide drawing 905 when increased height is required). Pole compensated under BA units.
C	Plastic cone mounted with crushed stone or gravel bed. Cone compensated under BHF units.
F	Concrete pad mounted. Pad compensated under BHF units.
G	Pea Gravel.
H	Handhole mounted with crushed stone or gravel bed. Handhole compensated under BHF units.
P	Plastic pad mounted. Pad compensated under BHF units.
R	Crushed stone or gravel bed.
S	Poured in place sealant.

The following illustrations indicate the method of designating the material required:

BDO3	A BDO3 housing stake mounted.
BDO4SH	A BDO4 housing with a poured in place sealant and handhole mounted with crushed stone or gravel bed.
BDO6SC	A BDO6 housing with a poured in place sealant and plastic cone mounted with crushed stone or gravel bed.
BDO8000F	A BD8000 housing, concrete pad mounted.

Section BDS – SERVING AREA INTERFACE CABINET (SAIC) ASSEMBLY UNITS

Consists of an SAIC stake mounted in place. Includes all labor and materials to complete the installation. Included in this unit must be the cabinet; cross-connect modules, blocks, or bulkheads; cabinet mounting accessories; internal mounting hardware such as frames, mounting brackets, all splicing hardware and accessories; grounding connector for terminating external ground wire, bonding connectors and harnesses in accordance with RUS Splicing Standard Bulletin 1753F-401(PC-2); cabinet base material; interface number and direction markings and placement of conduit(s) and such other labor and materials necessary to complete the

installation, except as specifically provided for in other units. Detailed plans and specifications further defining these units and establishing specific requirements including size of the housing for each SAIC location are attached hereto and are identified by the name and location of each SAIC.

The assembly units are defined as follows:

BDSM( )( )( ) - SAIC equipped with modules.
BDSB( )( )( ) - SAIC equipped with blocks.
BDSO( )( )( ) - SAIC equipped with optical modules or bulk heads.

The number of feeder pairs or fibers to be terminated must be indicated in the first parentheses; the number of distribution pairs or fibers to be terminated must be indicated in the second parentheses; and the number of electronic pairs or pass through fibers to be terminated must be indicated in the third parentheses. Options designated by the following suffixes apply:

Suffix	Description
A	Pole mount.
F	Concrete slab mount. Pad compensated under BHF units.
H	Handhole mounted with crushed stone or gravel bed. Handhole compensated under the BHF units.
P	Plastic pad mount. Pad compensated under BHF units.
R	Crushed stone or gravel bed.
S	Poured in place sealant.

The following illustrations indicate the method of designating the material required.

BDSM(25)(25)(0)A

SAIC equipped with modules, 25 feeder pairs terminated, 25 distribution pairs, pole mounted.

BDSB(50)(25)(25)F

SAIC equipped with blocks, 50 feeder pairs terminated, 25 distribution pairs terminated, and 25 electronic pairs terminated, concrete pad mounted.

BDSO(72)(576)(54)SH

SAIC equipped with optical modules or bulkheads, 72 feeder fibers terminated, 576 distribution fibers terminated, 54 pass through fibers, with a poured in place sealant and handhole mounted with crushed stone or gravel bed.

Section BFC – BURIED FILLED COPPER CABLE ASSEMBLY UNITS

Consists of one (1) foot (0.305 m) of buried filled copper cable in place. This unit includes all material and labor for installing, ripping (where necessary as determined by the Engineer), and backfilling, except as specifically provided for in other units. Where the cable is plowed, ripping may be necessary to provide a ripped path to allow placement at the required depth, and may require more than one ripped pass.

Options designated by the following suffixes apply:

Suffix	Description
D	Two or more cables placed simultaneously in the same plow slot or trench. Specify all cables within parentheses ( ) with every succeeding cable on the following next line. Each line will break out the length, labor, and material.
H	Screened cable designated for Tl carrier systems.
H1C	Screened cable designated for TlC carrier systems.
I	Buried cable, to be installed inside a duct placed by the contractor. The placement of the duct will be compensated under other units (BFC_V(x) and/or BM60()).
IE	Buried cable to be installed inside an existing duct placed by others.
P	Pre-designated buried filled cable which will, in the judgment of the Engineer, be much more difficult to install than normal for this project because of the presence of underground facilities or severe right-of-way restrictions. This suffix will be specified on the Construction Sheets in advance of bidding, and will not be specified later unless changes in the presence of underground utilities, right-of-way easement, or route changes occur that would, in the judgment of the Engineer, greatly increase the difficulty of cable placement. Also, this suffix will be specified during construction when undocumented buried facilities are encountered that, in the judgment of the Engineer, greatly increases the difficulty of cable placement.

T — Buried filled cable which will be placed at the specified depth by trenching only. This unit will be specified by the Engineer on the Construction Sheets in advance of bidding.

V(x) — One or more vacant ducts specified by the engineer in the Explanatory Notes to be placed simultaneously in the same plow slot or trench. Specify all cables and duct within parentheses ( ) with every succeeding cable or duct on the following next line. Each line will break out the length, labor, and material. The first value in the V suffix parentheses must indicate the number of ducts by the second value specifying the inside diameter of the ducts in inches or millimeters. If cable is to be pulled into this duct as part of the construction then, cable placement must be compensated under the BFC work units suffixed "I".

W — Buried filled cable placed must have a 3" wide, orange warning tape, installed 18" above the cable. The tape must be imprinted with the words "CAUTION" and "COPPER CABLE BURIED BELOW" every 16 to 36".

This unit also includes:

(1) Clearing of right-of-way. (The Engineer will be responsible for specifying any special conditions or instructions concerning the right-of-way clearing on the Construction Sheets.)

Note 1: Trees that are felled must be cut to commercial wood length and placed on the side of the right-of-way for the landowner. Commercial wood length means the length designated by the Engineer, but in no case must be required to be less than 2 feet (0.61 m).

Note 2: Brush, branches, and refuse from the clearing operations must, without delay, be disposed of by such of the following methods as the Engineer will direct:

Code	Disposition
A	Chipped and Blown.
B	Removed from the vicinity of the right-of-way.
C	Piled on one side of the right-of-way in such manner as to not obstruct roads, ditches, etc.
D	Other as specified by Engineer.

(2) All labor and material required for the installation of cable guards installed with the approval of the Engineer for the convenience of the Contractor.

(3) All labor and material required in the repair and/or replacement of streets, sidewalks, roads, drives, fences, lawns, shrubbery, water mains, pipes, pipelines and contents, underground power and telecommunications facilities, buried sewerage and drainage facilities, and any other property damaged during the installation of the buried cable, except loss or damage to crops, gardens, ornamental flowers or trees in the construction corridor necessarily incident to the construction of the Project and not caused by the negligence of the Contractor.

(4) The cable installed in place for aerial inserts in buried plant when specified by the Engineer. It includes the miscellaneous accessories such as drive rings, thimbleye nuts, etc., in accordance with the Construction Sheets, not included in other units, needed to secure the buried cable in place. (This unit does not include poles, anchors, guys, riser guards or suspension strand units which will be separately specified by the Engineer.)

(5) The spiraling of buried cable at an aerial insert where indicated by the Engineer on the Construction Sheets.

(6) All labor and material including housings, splice closures, stub poles, trenching, backfilling, tamping, cable, straight splicing, and other material and labor required for the purpose of joining cable of the same size and gauge in continuous lengths (reel ends). The housings or closures and all other associated materials and equipment must be of the same type as required at other cable splicing points specified in the construction of the Project unless otherwise approved by the Engineer.

(7) The labor and material for buried cable installed in Miscellaneous Assembly Units, such as, pipe crossings, rock excavating, asphalt or concrete. The labor and material required by these miscellaneous assembly units are specified separately.

The length of buried cable for compensation purposes is determined by taking the sum of distances between splice or terminal points specified by the Engineer, paralleling the cable. It includes the cable installed in trenches, pipes and non-pipe underground crossings, in sections of aerial construction of buried cable and in vertical runs on poles and in stake-mounted or pole-mounted housings. It excludes lateral and vertical runs of cable required solely for the purpose of joining cable in continuous lengths (reel ends) of the same size and gauge. The length of buried cable installed must be determined from the sequential number length markers on the outer jacket of the buried cable except where the markings are illegible, found to be in error or an excessive amount of slack has been provided such as in housings, filled splice closures and aerial inserts. Compensation for multiple cables placed in the same plow slot or trench is determined on the basis of the lengths of the individual cables involved.

Each buried filled copper cable assembly unit is listed in accordance with the number of pairs and gauge of conductors. Each unit is prefixed by the letters BFC. The following illustrations indicate the method of designating the material required:

(BFC50-24 & BFC25-22)D

Unit	No. of Units	Unit Price			Extended Price Labor and Materials
		Labor	Materials	Labor and Materials	
(BFC50-24					
& BFC25-22)D					

Two cables placed simultaneously in the same plow slot or trench; one a 50 pair, 24 gauge and the other a 25 pair, 22 gauge cable. Quantity, labor and material unit prices are to be specified for each cable separately (BFO24 & V(2x1)D).

(BFC50-24 & V(2x1"))D

Unit	No. of Units	Unit Price			Extended Price Labor and Materials
		Labor	Materials	Labor and Materials	
(BFC50-24					
& V(2x1"))D					

A 50 pair, 24 gauge with 2 vacant ducts having 1 inch (25.4 mm) inside diameters placed simultaneously in the same plow slot or trench. Quantity, labor and material unit prices are to be specified for each part separately.

Note: To have the contractor place the 50 pair 24 gauge copper cable in one of the vacant ducts as part of the construction is specified using the BM60 ( ) unit with the standard dimension ratio (SDR) or schedule (SCH) specified in the parenthesis as necessary i.e. BM60(2x1" SDR11). The cable placement must be compensated under the BFC work units suffixed "I". The cable pulled into the duct would be specified as BFC50-24I.

BFC25-24I A 25 pair, 24 gauge buried filled copper cable to be installed in a duct placed by the contractor.

BFC50-24IE A 25 pair, 24 gauge buried filled copper cable to be installed in an existing duct placed by others.

BFC100-22H	A 100 pair, 22 gauge buried filled copper cable with a screen designated for T1 carrier systems.
BFC300-24P	It indicates a 300 pair, 24 gauge buried filled copper cable which in the judgment of the Engineer will be much more difficult to install than normal because of the presence of underground facilities or severe right-of-way restrictions.

Section BFO – BURIED FIBER OPTIC CABLE ASSEMBLY UNITS

Each unit consists of one (1) foot (0.305 m) of buried fiber optic cable in place. This unit includes all material and labor for installing, ripping (where necessary as determined by the Engineer), and backfilling, except as specifically provided for in other units. Where the cable is plowed, ripping may be necessary to provide a ripped path to allow placement at the required depth, and may require more than one ripped pass.

Options designated by the following suffixes apply:

Suffix	Description
D	Two or more cables placed simultaneously in the same plow slot or trench. Specify all cables within parentheses ( ) with every succeeding cable on the following next line. Each line will break out the length, labor, and material.
H	Designated for cables with special conditions or instructions concerning the installation methods or handling as specified by the Engineer in the Explanatory Notes. This unit will be specified by the Engineer on the Construction Sheets in advance of bidding.
I	Buried cable, to be installed inside a duct placed by the contractor. The placement of the duct will be compensated under other units (BFO_V(x) and/or BM60( )).
IE	Buried cable to be installed inside an existing duct placed by others.
L	Designated for adding a locate conductor to a dielectric cable specifically for locating the cable.
P	Pre-designated buried cable which will, in the judgment of the Engineer, be much more difficult to install than normal for this project because of the presence of underground facilities or severe right-of-way restrictions. This suffix will be specified on the Construction Sheets in advance of

bidding, and will not be specified later unless changes in the presence of underground utilities, right-of-way easement or route changes occur that would, in the judgment of the Engineer, greatly increase the difficulty of cable placement. Also, this suffix will be specified during construction when unknown and undocumented buried facilities are encountered that, in the judgment of the Engineer, greatly increase the difficulty of cable placement.

R — Indicates cable of ribbon construction.

T — Buried cable which will be placed at the specified depth by trenching only.

V(x) — One or more vacant ducts specified by the Engineer in the Explanatory Notes to be placed simultaneously in the same plow slot or trench. Specify all cables and duct within parentheses ( ) with every succeeding cable or duct on the following next line. The first value in the V suffix parentheses must indicate the number of ducts by the second value specifying the inside diameter of the ducts in inches or millimeters. If cable is to be pulled into this duct as part of the construction then, cable placement must be compensated under the BFO work units suffixed "I".

W — Buried fiber optic cable placed must have a 3" wide, orange warning tape, installed 18" above the cable. The tape must be imprinted with the words "CAUTION" and "FIBER OPTIC CABLE BURIED BELOW" every 16 to 36".

This unit also includes:

(1) Clearing of right-of-way. (The Engineer will be responsible for specifying any special conditions or instructions concerning the right-of-way clearing on the Construction Sheets).

Note 1: Trees that are felled must be cut to commercial wood length and left on the side of the right-of-way for the landowner. Commercial wood length means the length designated by the Engineer, but in no case must be required to be less than 2 feet (0.61 m).

Note 2: Brush, branches, and refuse from the clearing operations must, without delay, be disposed of by such of the following methods as the Engineer will direct:

Code	Disposition
A	Chipped and Blown.
B	Removed from the vicinity of the right-of-way.
C	Piled on one side of the right-of-way in such manner as to not obstruct roads, ditches, etc.
D	Other as specified by Engineer.

(2) All labor and material required for the installation of cable guards installed with the approval of the Engineer for the convenience of the Contractor.

(3) All labor and material required in the repair and/or replacement of streets, sidewalks, roads, drives, fences, lawns, shrubbery, watermains, pipes, pipelines and contents, underground power and telecommunications facilities, buried sewerage and drainage facilities, and any other property damaged during the installation of the buried cable, except loss or damage to crops, gardens, ornamental flowers or trees in the construction corridor necessarily incident to the construction of the Project and not caused by the negligence of the Contractor.

(4) The cable installed in place for aerial inserts in buried plant when specified by the Engineer. It includes the miscellaneous accessories such as drive rings, thimbleye nuts, etc., in accordance with the Construction Sheets, not included in other units, needed to secure the buried cable in place. (This unit does not include poles, anchors, guys, riser guards or suspension strand units which will be separately specified by the Engineer.)

(5) The spiraling of buried cable at an aerial insert where indicated by the Engineer on the Construction Sheets.

(6) The labor and material for buried cable installed in Miscellaneous Assembly Units, such as, pipe crossings, rock excavating, asphalt or concrete. The labor and material required by these miscellaneous assembly units are specified separately.

The Buried Fiber Optic Cable Assembly Unit does not include labor and material for splicing the individual fibers. All splice points, including reel end splices, must be specified by the Engineer on the Construction Sheets. All labor and material required for splicing the fibers and for

enclosing the splice, such as, fiber organizers, splice closures, housings and stub poles, and miscellaneous hardware items must be included in other assembly units.

The length of buried cable for compensation purposes is determined by taking the sum of all distances between splice or terminal points specified by the Engineer. It includes the cable installed in trenches, pipes and non-pipe underground crossings, in sections of aerial construction of buried cable and in vertical runs on poles and in stake-mounted or pole-mounted housings. The length of buried cable installed must be determined from the sequential number length markers on the outer jacket of the buried cable except where the markings are illegible or found to be in error. Compensation for multiple cables placed in the same plow slot or trench is determined on the basis of the lengths of the individual cables involved.

Each buried fiber optic cable assembly unit is listed per the number of optical fibers. Each unit is prefixed by the letters BFO. The following illustrations indicate the method of designating the material required:

BFO288R A buried fiber optic cable with 288 fibers of ribbon construction.

(BFO144R & BFO36 & BFC100-24)D

Unit	No. of Units	Unit Price			Extended Price Labor and Materials
		Labor	Materials	Labor and Materials	
(BFO144R					
& BFO36					
& BFC100-24)D					

A 144 Ribbon and 36 loose tube fiber, buried fiber optic cables and a 100 pairs, 24 AWG buried filled copper cable, placed in the same plow slot or trench. Quantity, labor and material unit prices are to be specified for each cable separately (BFO24 & V(2x1")D).

(BFO24 & V(2x1”))D

Unit	No. of Units	Unit Price			Extended Price Labor and Materials
		Labor	Materials	Labor and Materials	
(BFO24					
& V(2x1"))D					

A buried fiber optic cable containing 24 fibers with 2 vacant ducts having 1 inch (25.4 mm) inside diameters placed simultaneously in the same plow slot or trench. Quantity, labor and material unit prices are to be specified for each part separately.

Note: To have the contractor place the 24 fiber in one of the vacant ducts as part of the construction is specified using the BM60 ( ) unit with the standard dimension ratio (SDR) or schedule (SCH) specified in the parenthesis as necessary i.e. BM60(2x1" SDR11). The cable placement must be compensated under the BFO work units suffixed “I”. The cable pulled into the duct would be specified as BFO24I.

BF0361 A buried fiber optic cable containing 36 fibers installed in a duct placed by the contractor.

BFO36IE A buried fiber optic cable containing 36 fibers installed in an existing duct placed by others.

Section BH – BURIED HANDHOLE ASSEMBLY UNITS

Consists of labor and material for one (1) buried handhole installed in place, including the base, top cover and mounting hardware, and pea gravel. The handhole size, amount of pea gravel and the installation must be as specified by the Engineer. The handhole assembly unit must be used only in areas of non-vehicular traffic. When required for use in areas of vehicular traffic, the handhole must be rated to withstand vehicular traffic. Where specified, vehicular traffic rated handholes must be suffixed with the letter "T". Note: When unit is used for handholes and pads designed to support a specific pedestal type must be specified by the Engineer in the List of Changes and Deletions pages of the contract.

The assembly units are defined as follows:

BHC( ) Buried Handhole for copper systems.

BHF( ) Buried Handhole for fiber optic systems.

The dimensions of length, width, and depth of the handhole must be indicated in the parentheses in inches (millimeters).

Examples:

BHC(13x24X24)	Buried handhole for copper systems with dimensions of 13 x 24 x 24" (330 x 610 x 610 mm) (approximate).
BHF(17x30x30)T	Buried handhole for fiber optic systems with dimensions of 17 x 30 x 30" (432 x 762 x 762 mm)(approximate) which is rated for vehicular traffic.

Section BM – MISCELLANEOUS ASSEMBLY UNITS

Consists of all labor and material to construct and install the units defined individually below required for the installation and construction of the buried cable portions of the Project:

BM2( )( ) Housing Ground Assembly Unit - Consists of the necessary labor and material for the installation of a ground rod (installed in undisturbed soil), ground rod clamp and the required length of a bare #6 AWG copper ground wire connected to an auxiliary grounding connector (included in the housing assembly unit) within the housing (see unit drawing BM2). Indicate the desired diameter and length of ground rod. For a sectionalized ground rod and coupling device use the suffix "S".

Examples:	BM2(1/2)(5)	A 1/2 inch X 5 foot (13 mm X 1.5 m) ground rod.
	BM2(5/8)(8)	A 5/8 inch x 8 foot (16 mm X 2.4 m) ground rod.
	BM2(5/8)(20)S	Two 5/8 inch x 10 foot (16 mm X 3.1 m) sectionalized ground rods and a coupling device. Where sectionalized ground rods are required the total length should appear on the Construction Sheets.

BM2A Housing Auxiliary Ground Assembly Unit – Consists of the necessary labor and material for the installation of a ground rod clamp (if required) and the required length of a bare #6 AWG copper ground wire connected to a pole ground wire using a ground wire connector (see unit drawing BM2A).

BM2B Housing Ground Assembly Unit – Consists of the necessary labor and materials for the installation of a bonding connector bracket within an existing housing. The bonding connector bracket should be the bracket that is recommended by the housing manufacturer.

BM2C — Existing Facility Bonding Assembly Unit – Consists of the necessary labor and material for bonding new or existing cable in an existing facility, such as a buried plant housing or splice closure. This unit includes a bonding connector, a bonding harness, tie-wraps, replacement of gravel and/or sealer, and rearrangement of an existing cable. Compensation must be paid on a per bond basis.

BM2D — New Facility Re-Bonding Assembly Unit – Consists of the necessary labor and material for re-bonding an existing cable in a new facility such as a buried plant housing or splice closure. This unit includes a bonding connector, a bonding harness, and tie wraps. Compensation must be paid on a per bond basis.

BM6M — Suspension Strand Assembly Unit – Consists of one (1) foot (0.305 m) of 6M [6,000 pounds (lbs)—2722 kilograms (kg)] suspension strand, supporting hardware, lashing wire, cable straps, and all other accessories required for aerial insert construction in buried plant, but excludes the buried cable. This unit will be used for short sections of aerial construction in buried plant. When such aerial inserts are required, the Engineer will specify the pole, riser guard, guy and anchor assembly units required, plus the appropriate quantity of this unit. The Contractor will be compensated for these units at their respective bid prices plus the appropriate cable units including the vertical length on the end poles.

BM10M — Suspension Strand Assembly Unit – This unit is the same as the BM6M unit except that the size of the strand is 10M (10,000 lbs--4536 kg).

BM16M — Suspension Strand Assembly Unit – This unit is the same as the BM6M unit except that the size of the strand is 16M (16,000 lbs--7257 kg).

BM21 — Cable Entrance – Consists of the necessary labor and material to terminate copper and/or fiber optic outside plant cables as shown on the detailed drawings as specified by the Engineer.

BM22 — Grounding System – Consists of the necessary labor and material to construct a grounding system as shown on the detailed drawings as specified by the Engineer. This unit must include all ground electrodes, trenching, backfilling, bonding the auxiliary ground electrodes to each other and to the primary ground electrodes, and bonding to the master ground bar (MGB).

BM50( ) — Buried Service Wire or Cable Installation to Pole-Mounted Wire Terminal Assembly Unit – Consists of the necessary labor and material to install a buried wire or cable from a buried plant housing to a pole mounted wire

terminal. This unit includes the installation of pole mounted buried wire or cable, a pole mounted wire terminal, and the necessary wire work at the wire terminal (see assembly unit drawing BM50). Pair count of the terminal size must be indicated in the parentheses. Installation of the buried plant housing and splicing of the pole mounted buried wire or cable inside the buried plant housing must be compensated under separate units.

BM51(x) Fiber Optic Pre-connectorized Multiport Terminal Assembly Unit – Consists of the necessary labor and material to install a fiber optic pre-connectorized multiport terminal from a distribution enclosure to a handhole or buried plant housing. This unit includes the installation of the stubbed fiber cables, multiport terminal, and the necessary cable work and hardware to secure and install the unit. In the parentheses, the number of ports must be indicated first by the length of the cable stubs in feet. Installation of the buried plant enclosures and any splicing of the stubbed fiber optic cables must be compensated under separate units.

BM52 Re-numbering Assembly Unit – This unit consists of the necessary labor and material to remove existing numbers and clean where necessary, and re-number an existing housing.

BM53 Warning Sign Assembly Unit – Consists of one (1) staked mounted warning sign, in place as shown on the Construction Sheets. This unit includes all labor and material to install the stake mounted sign (see detail drawing specified by the Engineer).

BM54 Route Sign Assembly Unit – Consists of one (1) stake mounted route sign, in place, as shown on the Construction Sheets. This unit includes all labor and material to install the stake mounted sign (see detail drawing specified by the Engineer).

BM55 Splice Location Sign Assembly Unit – Consists of one (1) stake mounted splice location sign, in place, as shown on the Construction Sheets. This unit includes all labor and material to install the stake mounted sign (see detail drawing specified by the Engineer).

BM55A Buried Splice Location Assembly Unit – Consists of one (1) buried splice location assembly unit installed in or above the buried splice case. The installation of the buried splice location unit must be in accordance with the manufacturer's instructions. If the owner has standardized on a specific system, the Engineer must so indicate (see detail drawing specified by the Engineer).

BM60( ) Underground Pipe Assembly Unit – Consists of one (1) lineal foot (0.305 m) of Plastic pipe, with the inside diameter in inches (meters) specified in parentheses, installed in place. The standard dimension ratio (SDR) or schedule (SCH) must be specified in the parenthesis as necessary. This unit includes the pushing of pipe and any excavation, backfilling and tamping necessary for the installation of the pipe. The pipe must be installed at the depth specified by the Engineer. The installed pipe must be free of any sharp projections to avoid damage to the outer jacket of the buried cable or wire during its installation in the pipe. This unit includes all material and labor required in the repair and/or replacement of streets, roads, sidewalks, drives, fences, lawns, shrubbery, water mains, pipes, pipelines and contents, underground power and telecommunications facilities and any other property damaged by the excavating, except loss or damage to crops, gardens, trees or ornamental flowers in the construction corridor necessarily incident to the construction of the Project and not caused by the negligence of the Contractor. The contractor will be compensated for labor and material for the buried cable or wire under separate units. Options designated by the following suffixes apply:

Suffix	Description
D	Directional boring required.
S	Steel pipe required. The wall thickness must be specified in the BM60 unit's parenthesis as necessary.
R	Indicates when a specialized rock boring bit or reamer is required. The unit consists of the labor and equipment required to bore through rock that cannot be accomplished with typical equipment used for a similar bore where rock is not encountered. This unit will only be used when pre-approved by the engineer and will be paid on a per foot basis only for that portion of the bore that is through rock.
RR	Indicates heavy rock that will require significantly larger equipment than required for the rest of the project and/or specialized dill heads that pump mud through the head to remove the rock debris. The unit consists of the labor and equipment required for the bore. This unit will only be used when pre-approved by the engineer and the payment method

has been pre-negotiated prior to bringing the equipment on site.

BM61( ) Underground Non-Pipe Assembly Unit – Consists of the labor in providing a hole in soil one (1) foot (0.305 m) in length and of a diameter in inches (meters) specified in parentheses. The depth of the hole below the surface of the ground must be specified by the Engineer in the plans and specifications. This unit includes any excavation, backfilling and tamping necessary for the installation. This unit may be used where the permanent installation of a steel or plastic pipe under the BM60 unit is not required. This unit includes all material and labor required in the repair and/or replacement of streets, roads, sidewalks, drives, fences, lawns, shrubbery, water mains, pipes, pipelines and contents, underground power and telecommunications facilities and any other property damaged by the excavating, except loss or damage to crops, gardens, trees or ornamental flowers in the construction corridor necessarily incident to the construction of the Project and not caused by the negligence of the Contractor. The contractor will be compensated for labor and material for the buried cable or wire under separate units. Where directional boring is required, the unit must be suffixed by the letter "D".

BM65( ) Guard Assembly Unit – Consists of the necessary labor and material for installing one (1) lineal foot (0.305 m) of split galvanized steel guard. The sections of guard may be straight and or curved. This unit may be used as attachments to bridges, abutments, walls, etc., and any below ground location. All hangers, bolts, and other attachment hardware along with excavation, backfilling, tamping, and restoration are included as part of this unit. The diameter of the guard must be indicated in the parentheses. The contractor will be compensated for labor and material for the buried cable or wire under separate units. (See detailed drawings as specified by the Engineer). Where a split plastic guard is required, the unit must be suffixed by the letter "P".

BM66( ) Bridge Attachment Assembly Unit – Consists of the necessary labor and material for installing one (1) lineal foot (0.305 m) of galvanized steel pipe, of the inside diameter in inches (meters) specified, attached to a bridge. Details of the method of installation will be in accordance with the Plans and Specifications as determined by the Engineer. The contractor will be compensated for labor and material for the buried cable or wire under separate units. (See detailed drawings as specified by the Engineer). Where a plastic pipe is required, the unit must be suffixed by the letter "P".

BM71 Rock Excavating Unit – Consists of one (1) lineal foot (0.305 m) of trenching, blasting, sawing, etc., measured parallel to the surface of the ground, in rock, including excavation, backfilling and tamping to place cable or wire to the depth specified in the Specifications. This unit includes all material and labor required in the repair and/or replacement of streets, roads, sidewalks, drives, fences, lawns, shrubbery, water mains, pipes, pipelines and contents, underground power and telecommunications facilities and any other property damaged by the excavating, except loss or damage to crops, gardens, trees or ornamental flowers in the construction corridor necessarily incident to the construction of the Project and not caused by the negligence of the Contractor. This unit will be specified by the Engineer only when field conditions at the site show the existence of rock to a depth required by the specification, which cannot be trenched, plowed or ripped. If extra depth is required, the unit must be suffixed by "E( )", where the required depth in rock must be shown inside the parentheses. The contractor will be compensated for labor and material for the buried cable or wire under separate units.

BM72 Asphalt Assembly Unit – Consists of labor and material necessary to remove and restore one (1) lineal foot (0.305 m) of asphalt pavement (where the removal does not necessitate the breaking up of concrete) measured along the route of the cable or wire. Any trenching which may be necessary for the installation of buried cable or wire is included in this unit. All work must be performed as required in accordance with federal, state and/or local construction standards in effect at the time of bid date. (Pursuant to these federal, state and/or local standards, restoration may include the use of any base and sub-base materials such as concrete, crushed stone, etc.). The contractor will be compensated for labor and material for the buried cable or wire under the separate units.

BM73 Concrete Assembly Unit – Consists of the labor and material necessary to remove and restore one (1) lineal foot (0.305 m) of concrete pavement (or any combination of concrete pavement and other surfacing material) where the removal necessitates the breaking up of concrete pavement, measured along the route of cable or wire. Any trenching which may be necessary for the installation of buried cable or wire is included in this unit. All work must be performed as required in accordance with federal, state and/or local construction standards in effect at the time of bid date. (Pursuant to these federal, state and/or local standards, restoration may include the use of any base and sub-base materials such as concrete, crushed stone, etc.) The contractor will be compensated for labor and material for the buried cable or wire separate units.

BM80 Riser Guard, 1 inch inside diameter (ID) x 8 feet (25.4 mm x 2.44 m). (See assembly unit drawing BM80.)

BM81 Riser Guard, 2 inch ID x 8 feet (50.8 mm x 2.44 m). (See assembly unit drawing BM81.)

BM82 Riser Guard, 3 inch ID x 8 feet (76.2 mm x 2.44 m, see assembly unit drawing BM82.)

BM91 Pedestal Restricted Access Insert Assembly Unit – Consists of a restricted access insert installed within a housing and the labor and material for setting up in preparation for installing the insert, such as, opening the jacket and bonding of the cable shields. Cable splicing must be compensated under the appropriate splicing units.

Section HBF – BURIED SPLICE CLOSURE ASSEMBLY UNITS

This unit consists of a buried splice closure installed in place. It includes the labor and material for setting up in preparation for installing the closure, such as, excavating a splicing pit, installing closure in a housing or handhole if necessary, opening the sheath or jacket of the cable, bonding of the cable shields, and closing the closure in accordance with the manufacturer's instructions. Cable splicing must be compensated under the appropriate splicing units.

The assembly units are defined as follows:

HBF( ) Buried Copper Closure - A filled splice closure with pair count and gauge for each cable to be spliced.

HBFOx Buried Fiber Optic Closure - A fiber optic closure, splice organizer, and miscellaneous materials adequate for the individual location. Unless otherwise specified by the Engineer, the following suffixes designate the case size in the series of cases specified by the Engineer. Projects that require more than one series of case shall have an additional suffix as specified in the List of Changes, Additions, and Deletion Pages to designate the series of case. The letter "x" designates the case size as small (S), medium (M), or large (L), as specified below by the following suffices:

Suffix	Description
S	Small splice case with up to two main ports and two secondary ports that can accept two smaller main cables, two armored drop cables, or up to four flat drop cables. The largest fiber count cable this case will accept is 96 Fiber.

M — Medium splice case with up to four main ports and up to four secondary ports that can accept four smaller main cables, four armored drop cables, or up to six flat drop cables. The largest fiber count cable this case will accept is 288 Fiber.

L — Large splice case with greater than four main ports and up to four secondary ports that can accept four smaller main cables, four armored drop cables, or up to eight flat drop cables. The case should be capable of accepting the largest fiber specified in the project. If the case is to be placed on an existing cable that is larger than the largest cable specified in the contract, the Engineer shall adequately specify the maximum cable size that will be placed in the case.

The Engineer shall provide additional information in the List of Changes, Additions, and Deletion Pages to adequately define the miscellaneous materials (splice trays, cable addition kits, etc.) required by the Bidder to complete this project. This information can be provided as a:

(1) List of cases showing the splice location, case size (S, M, L), cables entering the case, and splices taking place in each case,; and/or

(2) Schematic showing each splice location; and/or

(3) List of construction prints that show each splice location.

Examples:

HBF(100-24)S(100)

Buried closure enclosing two cables ends same pair count and gauge and 100 splices.

HBF(200-24)(100-24)A

Buried closure enclosing two cable ends with different pair counts provided with a treated plank above.

HBFOS — Buried fiber optic closure enclosing up to two main ports and up to two secondary ports. The largest fiber count cable this case will accept is 96 Fiber.

HBFOM Buried fiber optic closure enclosing up to four main ports and up to four secondary ports. The largest fiber count cable this case will accept is 288 Fiber.

HBFOL Buried fiber optic closure enclosing up to four main ports and up to four secondary ports. The case should be capable of accepting the largest fiber specified in the project. If the case is to be placed on an existing cable that is larger than the largest cable specified in the contract, the Engineer shall adequately specify the maximum cable size that will be placed in the case.

Section HC – COPPER SPLICING ASSEMBLY UNITS

HC1 Consists of the labor and material necessary in the wire work and splicing of one (1) cable pair in any cable, including any non-working pair in an existing cable in accordance with RUS Splicing Standard Bulletin 1753F-401 (PC-2) using individual mechanical splicing connectors. The splice may be straight, bridged, or pieced out and bridged. Pairs that are to be tested, capped, or tested and capped, when specified by the Engineer are considered to be part of this unit. Only those pairs on which splicing, testing, and/or capping operations are performed are counted and each pair is counted only once at each location. On aerial inserts, each end of the fuse link is considered as a splice.

HC2 Consists of the labor and material necessary for terminating one (1) distribution, feeder, and/or electronic pair on a cross-connect block or a cross-connect module, including any non-working pair in an existing cable in accordance with RUS Splicing Standard Bulletin 1753F-401(PC-2). Pairs that are to be tested, when specified by the Engineer are considered to be part of this unit. Only those pairs on which terminating and/or testing operations are performed are counted and each pair is counted only once at each location.

HC3 Consists of the labor and material necessary in the wire work and splicing of one (1) cable pair in any cable, including any non-working pair in an existing cable in accordance with RUS Splicing Standard Bulletin 1753F-401 (PC-2) using splicing modules. The splice may be straight, bridged or pieced out and bridged. Pairs that are to be tested, capped, or tested and capped, when specified by the Engineer are considered to be part of this unit. Only those pairs on which splicing, testing, and/or capping operations are performed are counted and each pair is counted only once at each location. On aerial inserts, each end of the fuse link is considered as a splice.

HC4	Consists of the labor and material for placing and terminating both ends of one (1) pair of cross-connect jumper wires on cross-connecting blocks and/or modules.

Section HO – FIBER OPTIC SPLICING ASSEMBLY UNITS

Consists of all labor and material and/or testing necessary to complete a single fiber optic splice, complete a ribbon fiber optic splice using mass splicing, to connect fiber-terminated ports using patch cords, or to terminate one optical splitter pigtail in accordance with RUS Splicing Standard Bulletin 1753F-401(PC-2). The labor must include initial measurement, minimizing the attenuation, splicing and stowing the spliced fiber or patch cord/pigtail in a fiber organizer. The labor and material for the fiber organizer is part of the appropriate splice closure unit or fiber patch equipment. Options designated by the following suffixes apply:

Suffix	Description
HO1	Fusion Splice
HO2	Mechanical Splice
HO3	Connector Splice
HO4	Connect Splitter Pigtail (Consists of cleaning and terminating one (1) optical splitter pigtail. The optical splitter must be provided by the Owner or under a separate unit.)
HO5( )	Fiber Optic Connection (Consists of cleaning and terminating an optical patch cord as specified in the List of Changes, Additions, and Deletions section of the contract by the Engineer. The parenthesis must be used to differentiate between different types of patch cords in the same contract.)
HO#R	Consists of all labor and material necessary to splice and test one (1) glass fiber of a ribbon matrix cable assembly to one (1) glass fiber in a ribbon matrix cable assembly. This unit is only used when a consecutive group of 12 fibers in the ribbon assembly are being spliced to 12 consecutive fibers of another ribbon assembly. Splices of partial ribbon assemblies or of a ribbon assembly to a buffer tube assembly are compensated with the appropriate HO# suffixes 1 – 5( ).

Section W – REARRANGEMENT UNITS

Specific rearrangement units must be designated and described by the Engineer on the "List of Special Arrangement Units" table of RUS Form 515. Existing plant assembly units to be rearranged are designated by a prefix "W".

Section XX – NONREUSABLE MATERIALS REMOVAL UNITS

These units cover the furnishing of all labor for the removal of construction assembly units from existing lines, and transportation of the removed materials for proper disposal. The Contractor will be permitted to use the most economical method of removing these units. The removal units are designated by the prefix "XX" followed by the assembly unit designation of the unit to be removed.

Section XZ – REUSABLE MATERIALS REMOVAL UNITS

These units cover the furnishing of all labor for the removal of construction assembly units from existing lines and all labor and transportation of the removed materials to a location designated by the Owner. The Contractor will be charged by the Owner for the materials removed under this section at the unit material values shown in column 2 of the "Value and Disposition of Units to be Removed" table of RUS Form 515. The number of units to be charged to the Contractor and the extended value of these units are shown in columns 3 and 4. Such charges will be placed against the Contractor as assembly units are removed and the unit material values will be deducted from the total value of assembly units constructed on this project for determination of the work accomplished for purposes of the monthly progress payments to the Contractor. Of the assembly units listed in the "Value and Disposition of Units to be Removed" table to be removed from existing lines certain units are to be reused in the construction of the project. The quantity of such units to be reused is listed in the "Value and Disposition of Units to be Removed" table, column 5. These units where installed in the project will be inventoried as new assembly units and compensated for at the unit bid prices. The quantity of assembly units listed in column 6 of the "Value and Disposition of Units to be Removed" table is the maximum quantity of removed assembly units that are to be returned to the Owner for credit which will be allowed at the unit material prices in column 2. Column 7 indicates the extended value of the units to be returned to the Owner. The Contractor will be allowed credit for assembly units listed in column 6 which, in the opinion of the Engineer, have not been damaged by the Contractor in removal and handling. Such credits will be allowed the Contractor as the assembly units are returned to a location designated by the Owner and must be added to the total value of installed assembly units for determination of work accomplished for the purposes of the monthly progress payments to the Contractor. The removal units are specified by the prefix "XZ" followed by the assembly unit designation of the existing assembly unit to be removed.

Part II – SPECIFICATION FOR MATERIALS

1 **SCOPE .** This part of the specification is concerned with the various materials required for the construction of the outside buried cable and wire plant of the rural telecommunications system as shown on the Plans, Specifications, and Construction Sheets. For purposes of this specification references to outside buried cables refer to both fiber optic and copper type cables or wires unless otherwise specified.

2 **GENERAL.** All materials used in the construction of the rural telecommunications system except those listed in Paragraph 4 below must be listed in RUS Informational Publication (IP) 344-2, "List of Materials Acceptable for Use on Telecommunications Systems of RUS Borrowers," unless specific written approval has been granted by the Administrator.

3 **STUB POLES.** The stub pole plan, method of treatment, kind of preservative and general procedure applying to all stub poles must be in accordance with the latest RUS specifications in effect at the time the bids are received.

4 **MISCELLANEOUS.** Items for which categories do not appear in RUS IP 344-2, "List of Materials Acceptable for Use on Telecommunications Systems of RUS Borrowers," must be of a quality suitable for the application for which they are intended and in compliance with the RUS "Buy American" requirement.

Part III - SPECIFICATION FOR CONSTRUCTION AND INSTALLATION

1 **GENERAL**

a All construction and installation work must be done in a thorough and workmanlike manner in accordance with the Plans, Specifications and Construction Sheets and must be subject to acceptance by the Owner and the Administrator.

b All material to be used in construction of the Project must be stored so as to be protected from deteriorating effects of the elements.

c All buried cables or wires, and accessory materials used in the construction of the Project must be handled with care. Each reel of buried cable or wire must be inspected for damage. All damage must be repaired to the satisfaction of the Engineer and in accordance with the methods or other instructions described in the appropriate paragraphs of Part III. If reel wrap is present, the reel wrap must remain intact on the reel until the cable or wire is ready to be placed.

d Deviations from the Plans, Specifications and Construction Sheets must not be permitted except upon written permission of the Engineer.

e The latest revision of the National Electrical Safety Code (NESC) and the National Electrical Code (NEC) must be followed in every case except where local regulations are more stringent, in which case local regulations must govern.

f The Contractor must maintain conductor polarity (tip and ring) and optical fiber strand identification at the main distributing frame, buried plant housings, splice closures and in the service entrance, all in accordance with the Plans, Specifications, and Construction Sheets (see guide drawing 815-1 for conductor polarity).

2 BURIED PLANT HOUSING STUB POLES

a The setting depth of stub poles where specified and used as mounting posts in connection with buried plant housings, must be a minimum of 3.0 feet (0.91 m) in soil and as specified by the Engineer in solid rock. If a greater depth in soil is necessary, the Engineer will indicate the required depth in the Proposal.

b The bottom of the hole must be thoroughly tamped.

3 CABLE SPLICING. Splicing for fiber optic cable, copper cable and wire must be in accordance with RUS Splicing Standard Bulletin 1753F-401(PC-2).

4 BURIED CABLE OR WIRE

a <u>General</u>

(1) The construction equipment must be subject to the approval of the Owner and the public authorities having jurisdiction over highway and road rights-of-way.

(2) The design of the plowshare must be such that the buried cable or wire passing through the plow must not bind and must not be bent in a radius less than 10 times the outside diameter of the copper cable or wire. Buried fiber optic cable passing through the plow must not bind and must not be bent in a radius less than 20 times the outside diameter of the cable. The plowshare must have a removable gate for the purpose of inspection, and a hinged fairlead, which must be equipped with smooth, free wheeling rollers or low friction surfaces to prevent damage to the cable or wire.

(3) The Engineer should periodically inspect the cable or wire as well as the installation equipment and procedures during installation to guard against

damage to the cable or wire when it is being placed in the ground, and to see that proper depth is maintained at all times.

(4) The Contractor must promptly repair any damage to fences, lawns, shrubbery, drives and any other property damaged during construction.

(5) A rock excavating unit (BM71) must be applied where a plow train cannot maintain specified depth under the buried cable or wire unit (including ripping). To assist in determining the ability of any plowing equipment to place the cable at a specified depth, the table below must be used only to compare the capability of this equipment with standard minimum drawbar pull ratings unless different characteristics are specified by the Engineer (greater drawbar pull may only be specified at greater depths than shown in the table).

Minimum Drawbar Pull vs. Cable or Wire Depth at 1.2 MPH (1.93 km/hr)

Depth		**Minimum Drawbar Pull**	
Inches	Meters	Pounds	Newtons
24	0.61	55,000	2.45×10^5
30	0.76	75,000	3.34×10^5
36	0.91	95,000	4.23×10^5

(6) The equipment and construction methods used by the Contractor must be such as to cause minimum displacement of the soil. The slot made in the soil by the cable plow must be immediately closed.

(7) Damage to banks, ditches, driveways and roads caused by the equipment must be immediately repaired to the satisfaction of the Engineer and public authorities having jurisdiction over highway and road rights-of-way where involved.

(8) Where cables or wires are buried near the edge of pavements, the Contractor must take particular care to avoid damaging the pavement. If such damage does occur repairs must be made immediately to meet the requirements of state or local authorities having jurisdiction over the pavement involved.

(9) The stub pole or stake portion of stake mounted housings must be installed in accordance with the Construction Sheets in a manner not to damage the cable or wire placed in the trench.

(10) To avoid possible damage to buried cable or wire from exposure to traffic, livestock and other hazards, trenching of laterals, trenching around culverts, construction of aerial inserts and similar operations must be completed as soon as practicable behind the plowing operation.

(11) Trenches must be promptly backfilled with earth and tamped at 6" (15.24 cm) lifts so that the earth is restored to original grade to assure no hazard to vehicular, animal or pedestrian traffic. No trenches must be left open overnight.

(12) When placing cable or wire in a trench in rock, the cable or wire must be cushioned by a fill of sand or selected soil at least 2 inch (5.08 cm) thick on the floor of the trench. The backfill for at least 4 inch (10.16 cm) above the cable or wire must be free from stones, rock or other hard or sharp materials, which might damage the cable. Alternate methods are permissible subject to approval of the Engineer.

(13) When placing cable or wire by horizontal directional drilling (HDD) or boring, the cable or wire bore route must be pre-planned and mapped for the most efficient path. As built bore route maps must serve as records for future reference and locating purposes however, alternate methods are permissible subject to approval of the Engineer and RUS.

(14) For proper and acceptable use, the underground pipe assembly unit (BM60( )) may use the "R" suffix for specialized rock boring or "RR" for heavy rock when specified by the engineer in the Explanatory Notes prior to the bidding process. All underground or buried pipes must be properly capped with or without any cable or wire installed.

(b) <u>Handling of Cable</u>

(1) Cables or wires must be carefully inspected by the Contractor during the placement operation to be certain that the cables or wires are free from defects.

(2) Bends of small radii and twists that might damage cable or wire must be avoided. During the placement operation, copper cable or wire must not be bent in a radius less than 10 times the outside diameter of the copper cable or wire. Fiber optic cable must not be bent in a radius less than 20 times the outside diameter of the cable.

(3) Care is to be exercised during the plowing operation, to feed the cable or wire into the ground through the plow loosely and at no tension. Equipment and construction methods must be such as to assure compliance with this requirement. The Contractor must furnish competent supervision at all times at the site of plowing operations to assure compliance with this requirement.

(4) If, during the plowing operation, the plow should strike a buried object or rock that stops the equipment which necessitates removal of the plow from the ground, the plow must be removed from the ground carefully, and if practicable without backing the plow, to avoid damage to the cable or wire. Should it be necessary to back the plow to remove it from the ground, the cable or wire must be uncovered a sufficient distance back for inspection by the Engineer to determine whether the cable or wire has been damaged.

(5) Every instance of damaged cable or wire observed at any time whether prior to installation, occurring during construction, or discovered by test or observation subsequent to installation in plant, must be immediately called to the attention of the Engineer. The method of repair or correction of such damage must be in accordance with the written instructions of the Engineer. The Contractor must promptly repair such damage or make such corrections in accordance with such written instructions of the Engineer. Minor damage to the outer jacket of the cable or wire observed prior to or occurring during construction must be repaired in accordance with RUS Splicing Standard Bulletin 1753F-401(PC-2).

(6) Major damage to cable or wire observed prior to or during construction must be corrected by enclosing the damaged section of cable or wire in (1) a buried plant housing located as specified by the Engineer or (2) a buried splice closure if approved by the Engineer, which are buried to the same depth as that required for the cable or wire. If the shield has been broken or the conductor insulation damaged, the cable or wire must be restored to the equivalent of new condition. This may require cutting out the damaged section of cable or wire if required by the Engineer.

(7) Major damage to cable or wire discovered after placement either through test or observation must be repaired as approved by the Engineer. This may require cutting out the damaged section and replacing it with a short section of new cable or wire with splices made in (1) buried plant housing or (2) buried splice closures, if approved by the Engineer, which are buried to the same depth as that required for the cable or wire. It may also require the replacement of an entire section between housings already installed.

c Depth of Buried Plant

(1) Unless otherwise specified by the Engineer in the Proposal, or on the Construction Sheets, the depth of buried cable or wire placed, measured from the top of the cable or wire to the surface of ground or rock must be as listed in the following table:

Minimum depth in soil	24 inch (610 mm)
Minimum depth at ditch crossings (See guide Drawing 975)	36 inch (914 mm)
Minimum depth in rock	6 inch (152 mm)
Minimum depth at subscriber premises	12 inch (305 mm)

(2) In the case of a layer of soil over rock, either the minimum depth in rock, measured to the surface of the rock, or the minimum depth in soil, measured to the surface of the soil, may be used at the Contractor's option.

(3) When rock excavating is specified, width and depth requirements of the trench must be as shown below:

Trench Width	Trench Depth
6 inch (152 mm) or less	6 inch (152 mm)
7 inch (178 mm)	9 inch (229 mm)
8 inch (203 mm)	12 inch (305 mm)
9 inch (229 mm)	15 inch (381 mm)
10 inch (254 mm) or greater	18 inch (457 mm)

Either the minimum depth in rock must be achieved or some other method may be employed by the Contractor to provide adequate protection to the cable or wire as agreed to by the Engineer.

(4) When placing cable or wire by horizontal directional drilling (HDD) or boring, the Contractor must continually control the horizontal and vertical movements of the bore to a specified route and depth as planned on the bore route map.

d Splicing and Terminations

(1) Buried service cables or wires must be spliced directly to the appropriate pair or optical strand of the buried cable, or spliced to the appropriate pair number or optical strand on a terminal block or optical terminator as specified by the Engineer.

(2) For the purpose of joining buried cable or wire at reel ends, the buried cable or wire must be made continuous by splicing the conductors or optical strands directly together either in a housing or a buried splice closure. The method and location must be specified by the Engineer.

(3) Splicing and termination of cable or wire must be in accordance with the cable schematic drawings issued by the Engineer.

(4) All copper splices and terminations of cable or wire in buried splice closures must be electrically tested to ensure freedom from opens, shorts, crosses and grounds and all defects cleared prior to closing the splice closure. Shield continuity also must be checked prior to closing the slice closure.

(5) Splicing of copper cable, wire, or fiber optic cable must be in accordance with RUS Splicing Standard Bulletin 1753F-401(PC-2).

5 BURIED HANDHOLES

a Buried handholes must be installed per instructions given herein unless otherwise specified by the Engineer unless state or local requirements are more stringent in which case the latter requirements will govern.

b The Engineer must determine the location of the handhole and must specify type, position and depth of installation.

c A hole must be dug large enough to accommodate the handhole.

d The handhole must be positioned and a suitable backfill must be tamped around the handhole.

e Pea gravel should be placed inside of the handhole to minimize condensation problems.

f The Engineer must ensure that the dimensions of the handhole must be large enough to accommodate the splice case installation and when required, cable slack.

6 MISCELLANEOUS - BURIED PLANT

a The separate steel stakes of stake mounted housings must be driven a minimum of 12" (30.48 cm) in undisturbed earth in a vertical position and faced in accordance with the Construction Sheets. Care must be exercised in the installation of stakes or housings. Housing covers must be securely closed at all times except when work is being performed within the housing.

b The shields of all buried copper cable or wire and the armor of all buried fiber optic cable must be connected together at all splices and termination points, as specified in RUS Splicing Standard Bulletin 1753F-401(PC-2) to ensure a continuous metallic connection throughout the buried plant. Buried cable or wire shields and fiber optic cable armor must also be connected to the ground connectors in buried plant housings and to other ground installations as shown on the Construction Sheets and in RUS Splicing Standard Bulletin 1753F-401(PC-2).

c Stake mounted warning, route, and splice location signs must be installed in accordance with the manufacturer's instructions and in locations as specified by the Engineer. As an alternate to the splice location sign, the Engineer may specify the use of a buried splice location device (BM 55A).

d Buried cable and wire, including buried services, terminated or spliced in a housing must be directionally marked as specified on the Construction Sheets or as specified by the Engineer. The directional markers must be installed at the time the cable or wire is placed in the housing and before the lateral trench to the housing is backfilled.

e Where aerial inserts in buried plant are specified by the Engineer, the construction must be accomplished if possible without cutting the cable or wire. Where due to physical conditions, in the opinion of the Contractor, the cutting and splicing of cable or wire are necessary, prior approval to cut the cable or wire must be obtained from the Engineer. The splicing of cable or wire must be in accordance with RUS Splicing Standard Bulletin 1753F-401(PC-2).

f Junctions between buried cable and aerial circuits must be made in accordance with the applicable Construction Sheets.

g All products utilized to control rodents and/or insects should be specifically formulated for the telecommunications industry and applied in accordance with the instructions or directions detailed on the manufacturer's product label.

h Buried cable and wire must be placed in the same trench to the buried plant housing, unless otherwise specified by the Engineer.

7 SPECIAL REQUIREMENTS FOR INSTALLATION OF SERVING AREA INTERFACE CABINETS (SAIC)

a Specific installation instructions for the pad or slab base preparation and construction, placement of conduit(s), and the assembly and installation cabinet must be provided by the manufacturer and/or the Engineer.

b A drainage hole must be drilled at the low point of the radius of bend of the conduit placed between two cabinets.

c All vacant or unused conduits must be sealed as specified by the Engineer.

d Specific installation instructions for mounting the cabinet assembly will be provided by the manufacturer and/or the Engineer.

e The separate steel stakes of stake mounted housings must be driven a minimum of 12" (30.48 cm) in undisturbed earth in a vertical position and faced in accordance with the Construction Sheets. Care must be exercised in the installation of the stakes and housings. Housing covers must be securely closed at all times except when work is being performed within the housing.

f All special installation tools for splicing and placing cross-connect jumpers must be used as indicated by the manufacturer.

g Where conventional hard-wire splicing is employed at SAIC locations, the splicing and lay-up of conductor pairs must be in accordance with RUS Splicing Standard Bulletin 1753F-401 (PC-2) and/or special instructions issued by the Engineer.

h Where conventional fiber splicing is employed at SAIC locations, the splicing and required cable slack must be in accordance with RUS Splicing Standard Bulletin 1753F-401 (PC-2) and/or special instructions issued by the Engineer.

i Pair or optical strand counts must be shown on all splice, feeder and cross-connect modules or blocks identifying feeder, distribution, electronic, and pass through terminations.

j Pair or optical strand count tags must be used on bundle counts where hard-wire or any fiber optic splicing is employed. On bundle tags, feeder, feeder/distribution, distribution and electronic/pass through cable identification, pair or optical strand counts must be shown per cable schematics in accordance with RUS Splicing Standard Bulletin 1753F-401 (PC-2).

LIST OF CONSTRUCTION DRAWINGS AND PLANS

Assembly Unit Drawings

BM2,-2A	Ground Wire Assembly, Buried Plant
BM50	Buried Service Wire or Cable Installation to Pole-Mounted Wire Terminal
BM80, BM81, BM82	Riser Guards

Construction Guide Drawings

815-1	Buried Plant Conductor Polarity Diagram
905	Installation of Type "M" or Type "H" Pole-Mounted Housings at Increased Height
907	Splice Closures – Direct Burial
910	Pea Gravel and Sealer Installation Procedures for Buried Plant Housings
951	Aerial Insert in Buried Plant Construction
952	Protection of Buried Cable from Power Contact to Aerial Inserts
965	Placement of Numbers and Letters on Housings
971-1	Wiring Arrangement at Junction of New Aerial Cable with Buried Cable or Wire
971-2	Junction of Aerial Cable with Buried Cable or Wire
975	Buried Plant Under Ditches
976	Housing Installation Details

NOTE: On the Assembly Unit and Construction Guide Drawings an asterisk (*) in the ITEM column indicates items that are no longer listed in RUS IP 344-2, "List of Materials Acceptable for Use on Telecommunications Systems of RUS Borrowers."

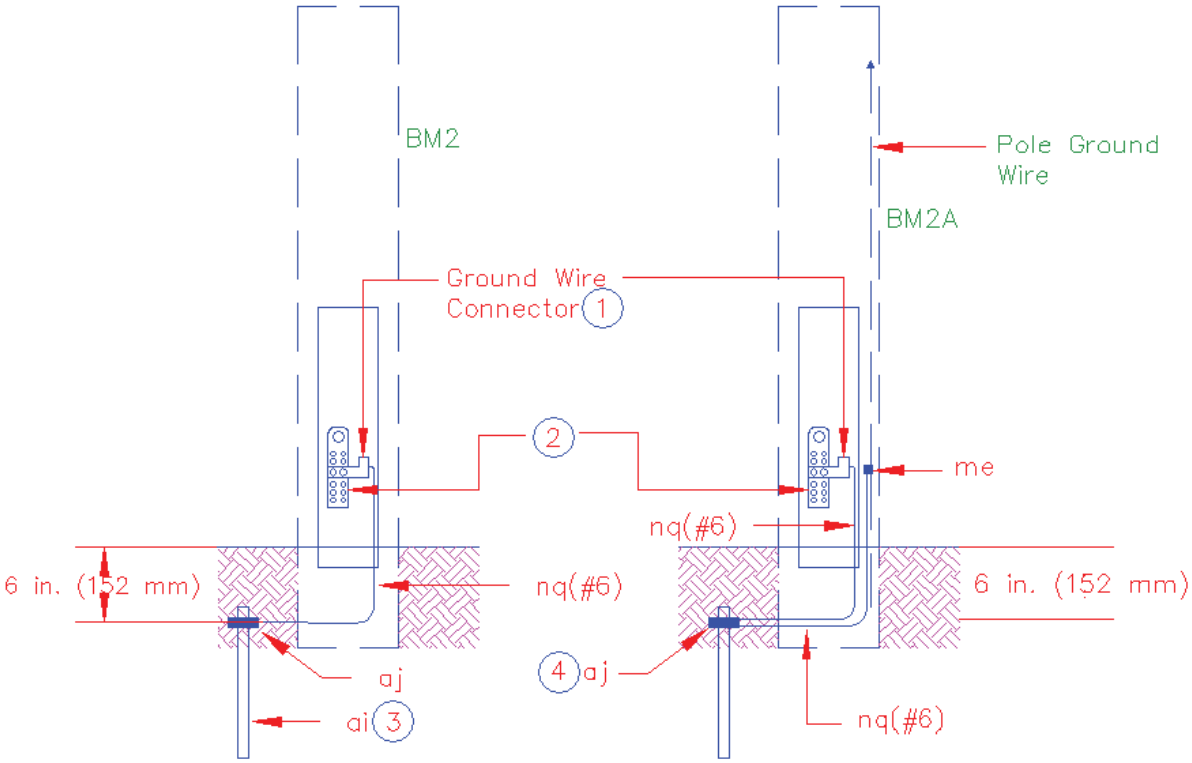

Notes:

1. The ground wire connector is supplied with the buried plant housing, buried plant fiber optic housing, and serving area interface cabinet under the BD, BDO, and BDS Assembly Units, respectively.
2. The bonding bracket is supplied with the buried plant housing, buried plant fiber optic housing, and serving area interface cabinet under the BD, BDO, and BDS Assembly Units, respectively.
3. The ground rod shall be installed in undisturbed soil.
4. One clamp may be used if it is listed by Underwriter's Laboratories (UL) or other acceptable organizations for connecting two wires, otherwise two UL or other acceptable organization listed clamps must be used.

		BM2	BM2A
ITEMS	MATERIALS	NO. REQ'D	NO. REQ'D
*nq	Wire, ground, bare, #6 AWG copper	As required	As required
ai	Rod, ground (size & length as req'd)	1	–
me	Connector, ground wire	–	1
aj	Clamp, ground rod	1	If required

RURAL TELECOMMUNICATIONS CONSTRUCTION PRACTICES
GROUND WIRE ASSEMBLY, BURIED PLANT

Scale: NTS

September 2010

BM2 – BM2A

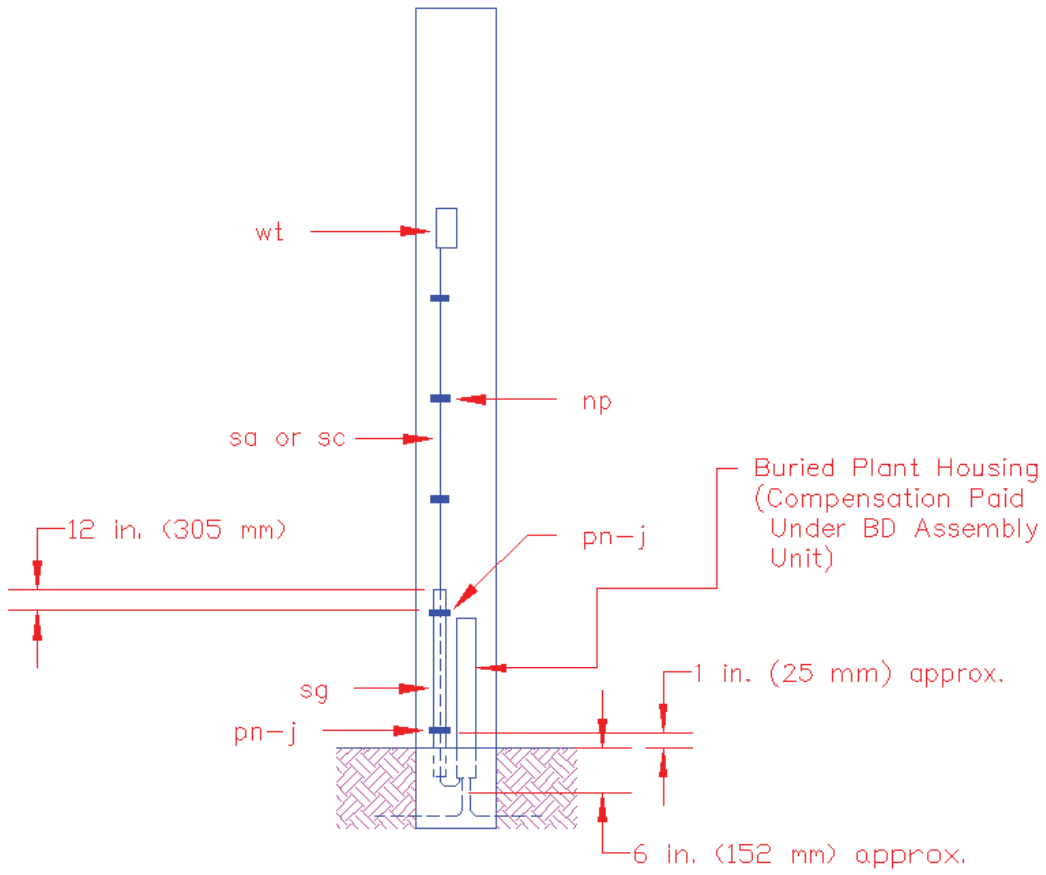

ITEMS	MATERIALS	NO. REQ'D
wt	Terminal, wire, filled, unprotected, pole–mounted (specify pair size)	1
*pn	Strap, riser guard	2
*np	Clamp, one–hole, offset	as req'd
sa or sc	Wire or cable, buried	as req'd
sg	Guard, riser, 1 in. ID by 8 ft (25 mm ID by 2.4 m)	as req'd
j	Screws, lag (size as required)	4

RURAL TELECOMMUNICATIONS CONSTRUCTION PRACTICES
BURIED SERVICE WIRE OR CABLE INSTALLATION
TO POLE–MOUNTED WIRE TERMINAL

Scale: NTS | September 2010

BM50

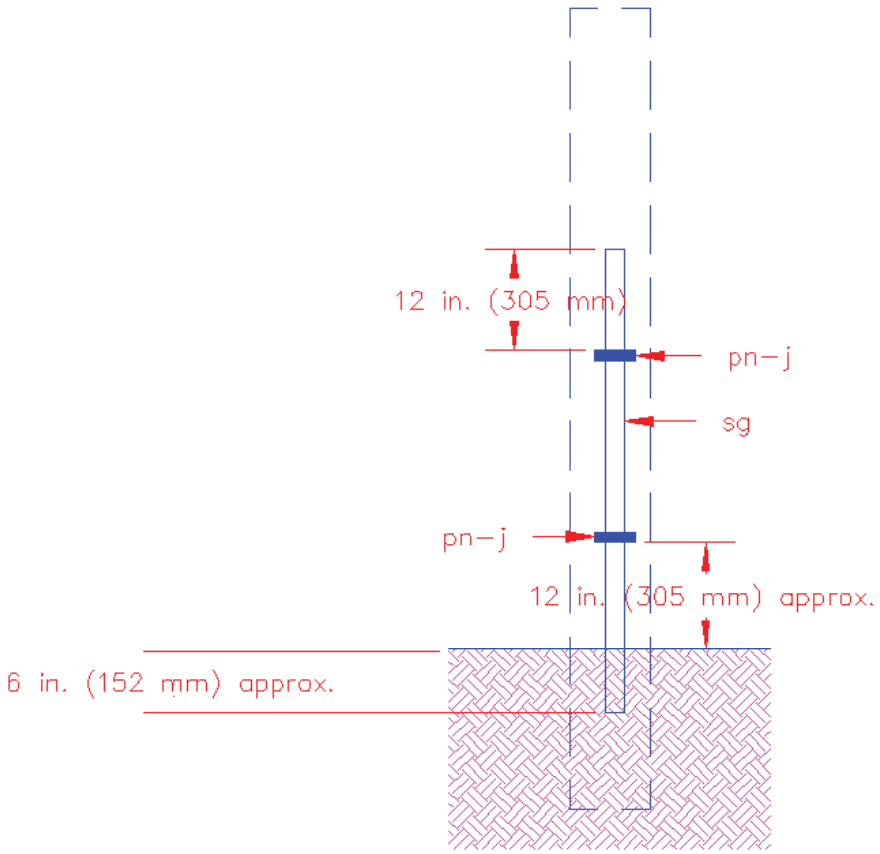

		BM80	BM81	BM82
ITEMS	MATERIALS	NO. REQ'D	NO. REQ'D	NO. REQ'D
sg	Guard, riser 1 in. ID * 8 ft (25 mm ID * 2.4 m)	1	–	–
sg	Guard, riser 2 in. ID * 8 ft (51 mm ID * 2.4 m)	–	1	–
sg	Guard, riser 3 in. ID * 8 ft (76 mm ID * 2.4 m)	–	–	1
*pn	Strap, riser guard	2	2	2
j	Screw, lag (size as required)	4	4	4

RURAL TELECOMMUNICATIONS CONSTRUCTION PRACTICES
RISER GUARDS

Scale: NTS | September 2010

BM80, 81, 82

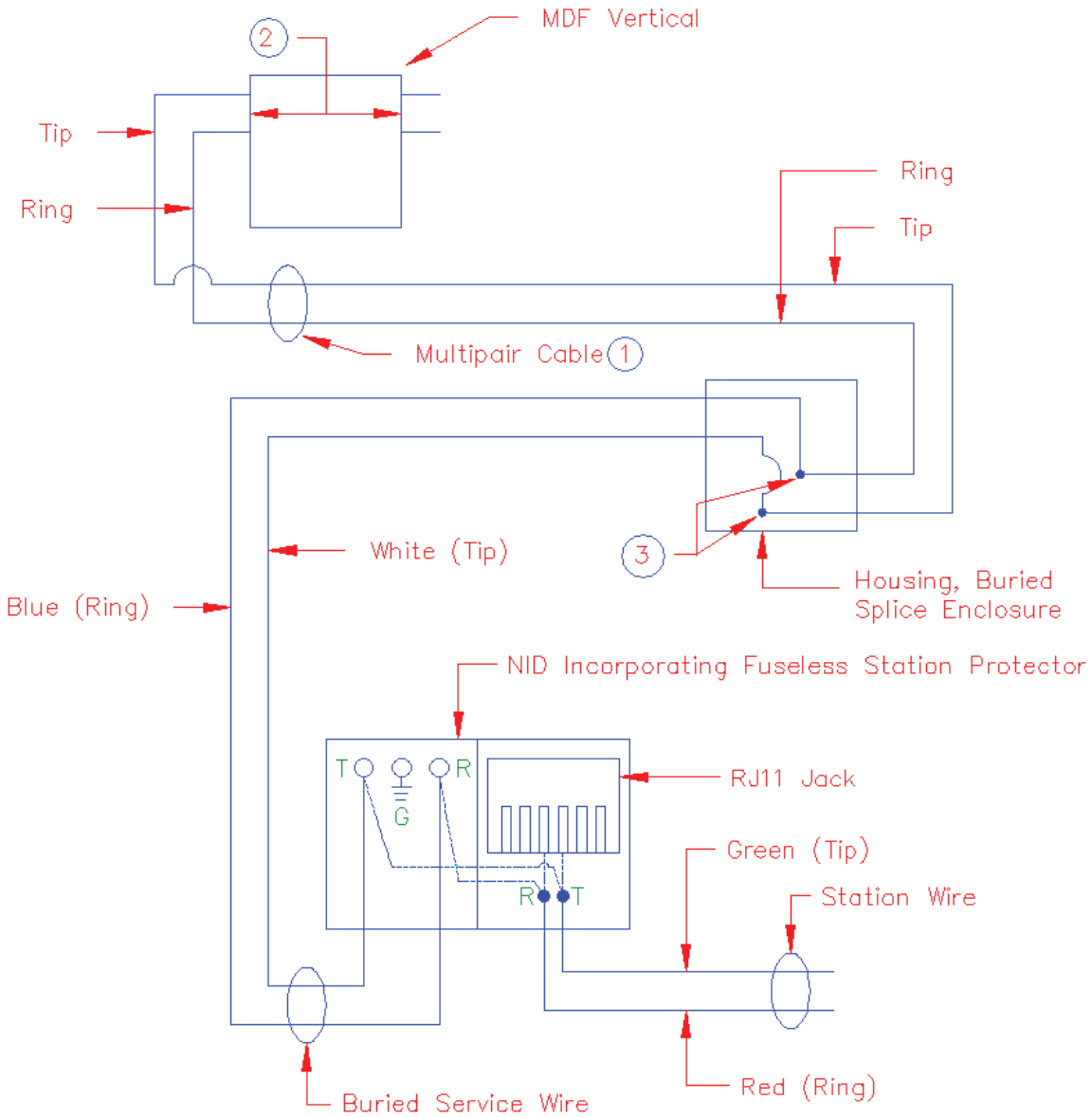

Notes:

1. Refer to appropriate cable specifications for tip and ring conductor identification.
2. Connections to be made in accordance with the manufacturer's instructions.
3. Connections to be made in accordance with RUS Bulletin 1753F-401(PC-2), "RUS Standard for Splicing Copper and Fiber Optic Cables."

RURAL TELECOMMUNICATIONS CONSTRUCTION PRACTICES BURIED PLANT CONDUCTOR POLARITY DIAGRAM		
Scale: NTS		September 2010
		815-1

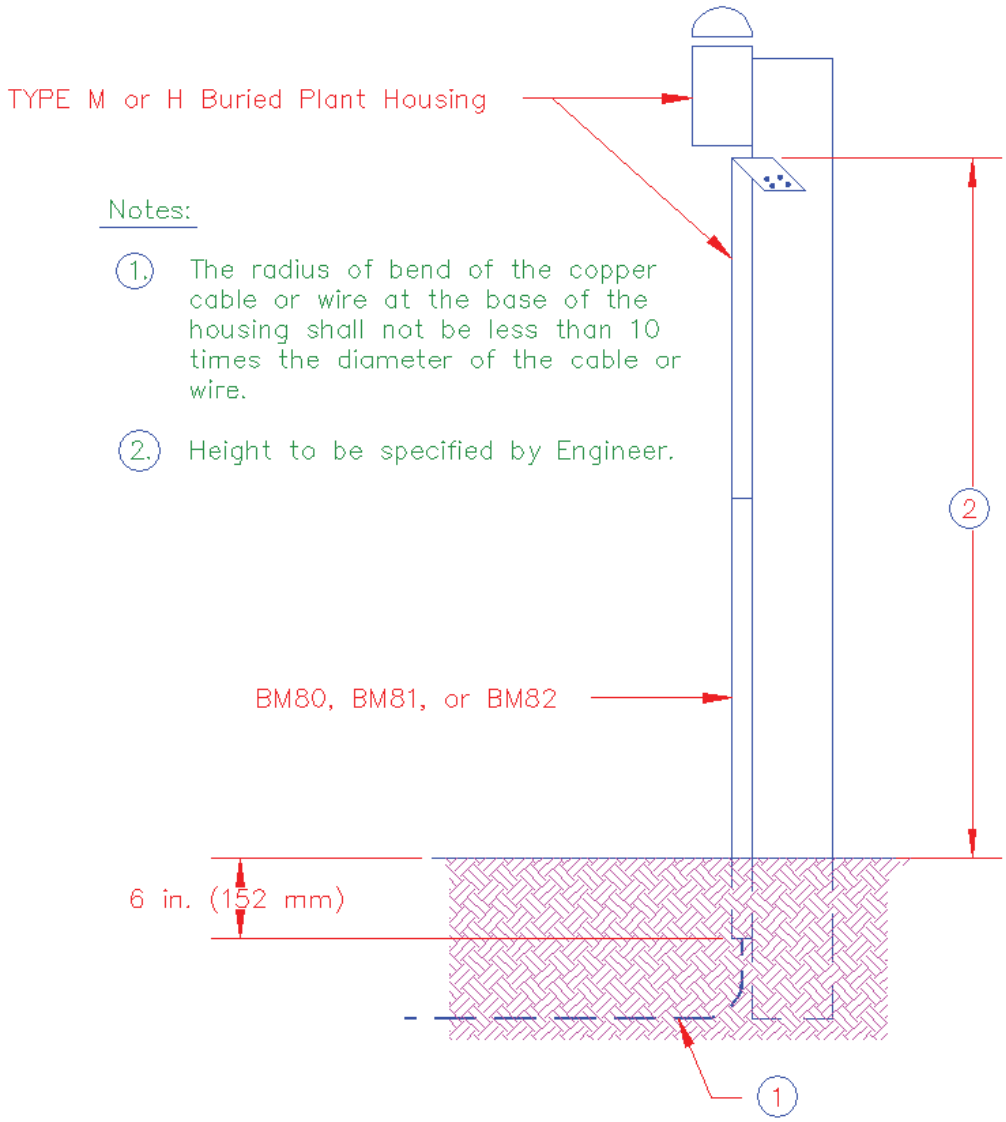

Notes:

1. The radius of bend of the copper cable or wire at the base of the housing shall not be less than 10 times the diameter of the cable or wire.

2. Height to be specified by Engineer.

RURAL TELECOMMUNICATIONS CONSTRUCTION PRACTICES INSTALLATION OF TYPE M OR H POLE-MOUNTED BURIED PLANT HOUSINGS AT INCREASED HEIGHT	
Scale: NTS	September 2010
	905

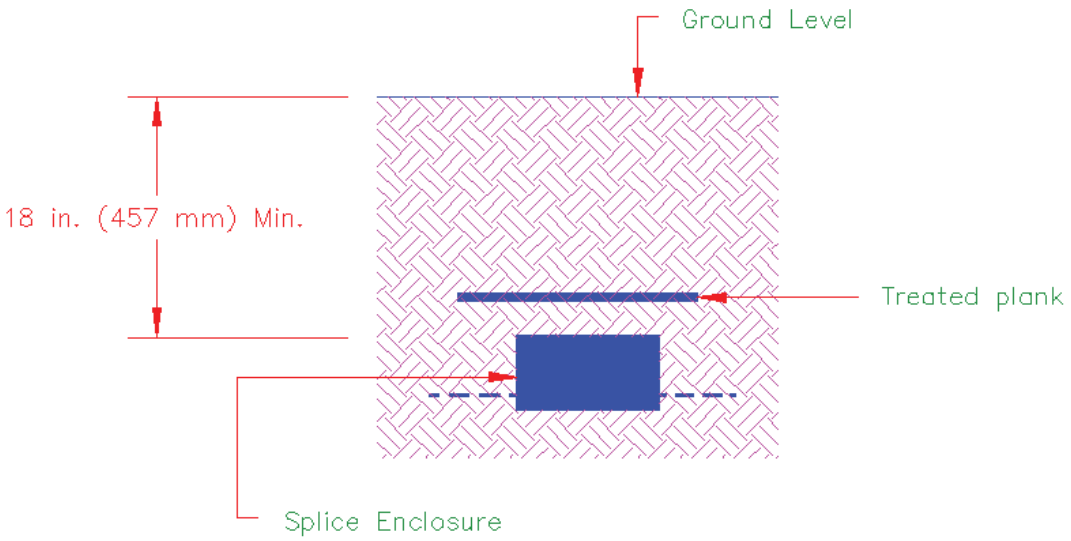

Note:

1. Fill the trench with soil to 6 in. (152 mm) above top surface of the buried splice enclosure and compact soil carefully. Place the treated plank over the top of the installed buried splice enclosure as shown.

RURAL TELECOMMUNICATIONS CONSTRUCTION PRACTICES SPLICE CLOSURES – DIRECT BURIAL		
Scale: NTS		September 2010
		907

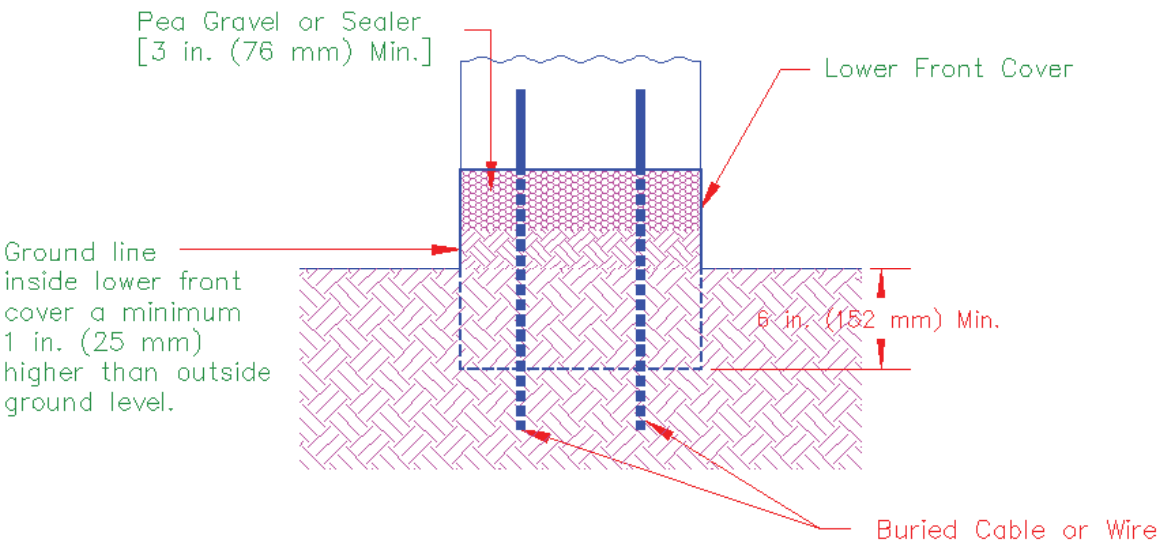

RURAL TELECOMMUNICATIONS CONSTRUCTION PRACTICES PEA GRAVEL OR SEALER INSTALLATION PROCEDURES FOR BURIED PLANT HOUSINGS		
Scale: NTS		September 2010
		910

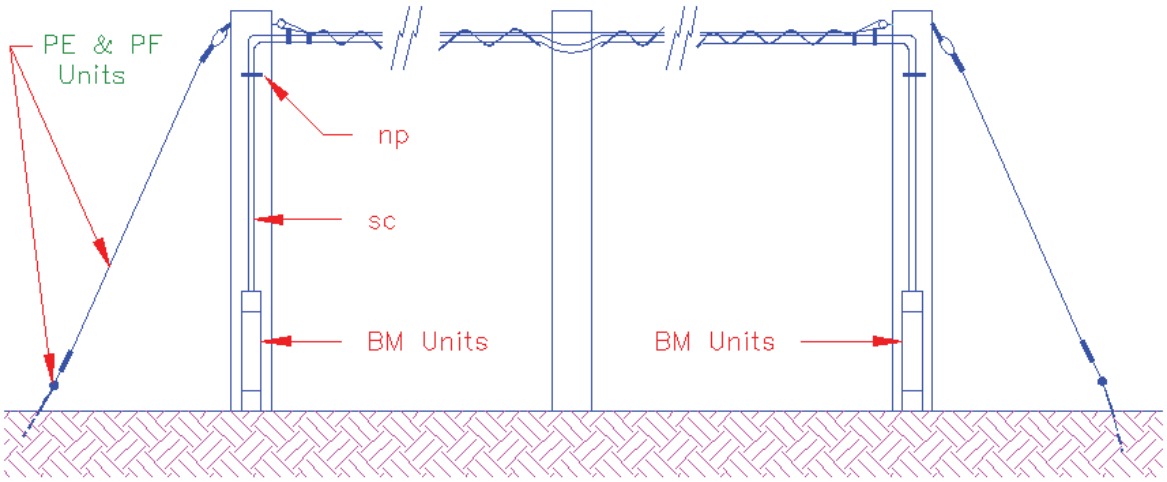

Notes:

1. The aerial construction used in this case shall be in accordance with the aerial construction practices described in RUS Form 515c entitled, "Specifications and Drawings for Construction of Aerial Plant."

2. The cable clamps shall be installed at approximately 18 in. (457 mm) intervals.

3. If it is necessary to cut the cable in making an aerial installation, the use of a ready–access enclosure or splice enclosure is acceptable.

4. Aerial inserts exposed to power contacts requiring special splicing will be identified by the Engineer and shall be isolated as shown on Guide Drawing 952.

5. Ground support strand where exposed to power contacts as specified by the Engineer on the Construction Sheets.

ITEMS	MATERIALS	NO. REQ'D
*np	Clamp, one–hole, offset	as req'd
pl	Enclosure, splice	if req'd
sc	Cable, buried	
er	Enclosure, ready–access	if req'd

RURAL TELECOMMUNICATIONS CONSTRUCTION PRACTICES
AERIAL INSERT IN BURIED PLANT CONSTRUCTION

Scale: NTS		September 2010
		951

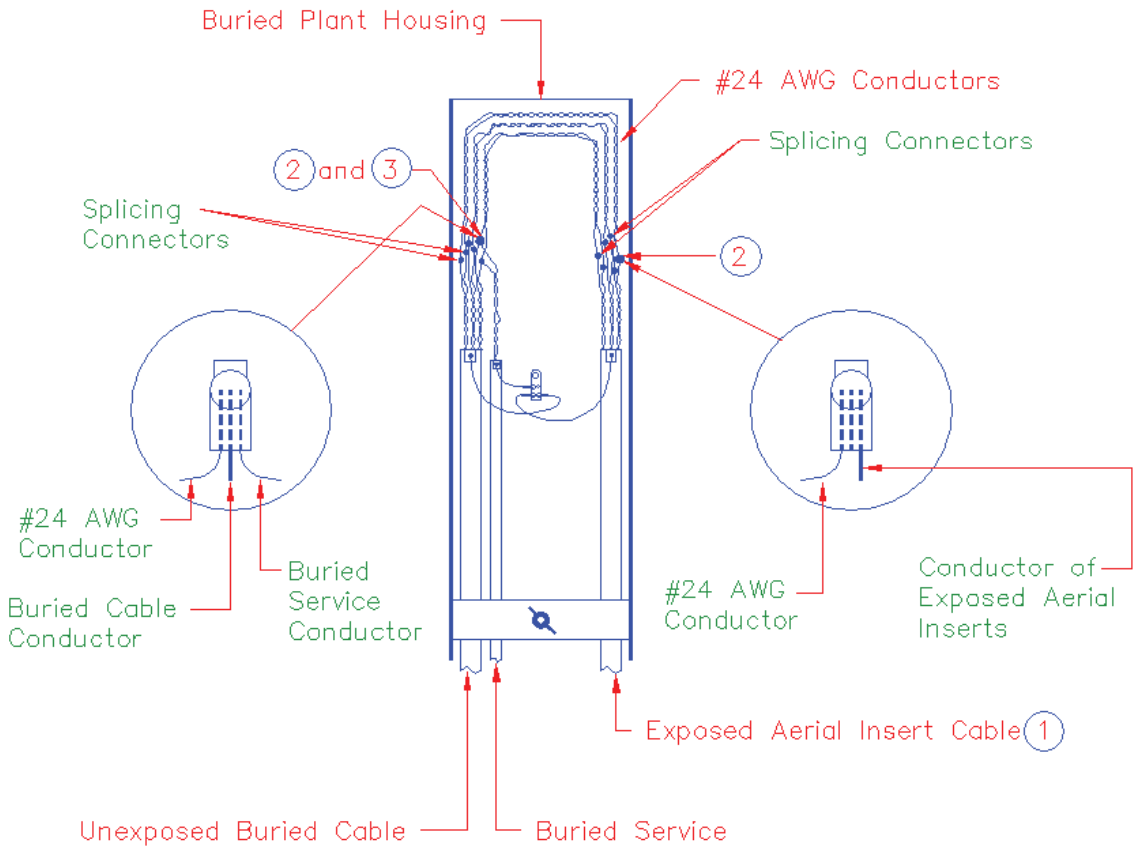

Notes:

1. Guide Drawing 952 is applicable if the exposed aerial cable insert is #22 AWG or larger.

2. Splice a color coded #24 AWG Conductor [8 in. (203 mm) min. length] in series with each cable conductor appearing in the aerial insert.

3. Splice the buried service, if any, to the unexposed buried cable at the same point that the #24 AWG conductor is spliced.

RURAL TELECOMMUNICATIONS CONSTRUCTION PRACTICES PROTECTION OF BURIED CABLE FROM POWER CONTACT TO AERIAL INSERTS		
Scale: NTS		September 2010
		952

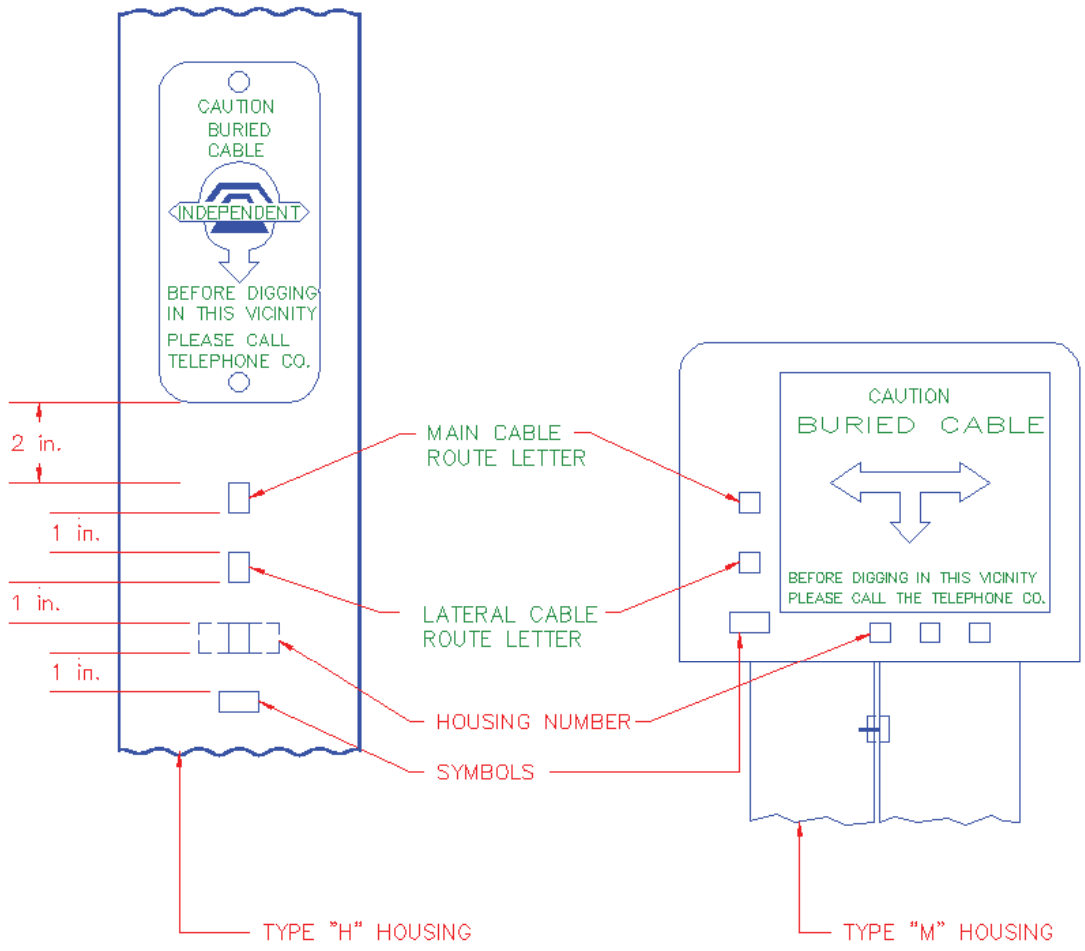

Notes:

1. Field installed warning signs or numbering systems should not penetrate or harm the housing surface.
2. For converting English units to metric units use 1 in. = 25.4 mm.

RURAL TELECOMMUNICATIONS CONSTRUCTION PRACTICES PLACEMENT OF NUMBERS AND LETTERS ON HOUSINGS		
Scale: NTS		September 2010
		965

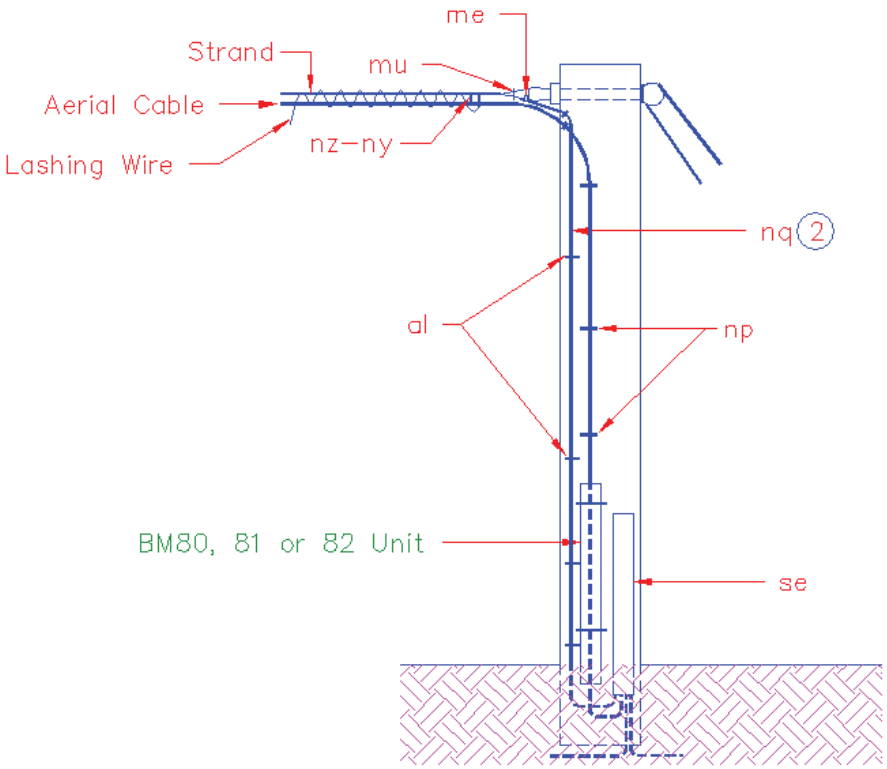

Notes:

(1.) If the aerial conductors are smaller than 22 gauge, splice each aerial cable conductor, to be connected, directly to the main buried cable or wire conductor. If the aerial conductors are 22 gauge or larger, splice each aerial conductor to an 8 in. (203 mm) long 24 gauge insulated copper conductor of the same color as the conductor to be spliced. Splice other end of the 24 gauge conductor to the buried cable or wire conductor of the main lead.

(2.) Connect the support strand of the cable to the grounding connector in the housing, by means of a #6 AWG ground wire and ground as specified by the Engineer.

(3.) Bond shield of aerial cable to bonding bracket in the housing.

ITEMS	MATERIALS	ITEMS	MATERIALS
*nq	Wire, ground, bare, #6 AWG copper	*mu	Sleeve, deadend, automatic
*al	Staples, ground, wire	*nz	Supports, lashed cable
me	Connector, ground wire	*ny	Spacer, cable
se	Housing, buried plant		
*np	Clamp, one–hole, offset		

RURAL TELECOMMUNICATIONS CONSTRUCTION PRACTICES
WIRING ARRANGEMENT AT JUNCTION OF NEW
AERIAL CABLE WITH BURIED CABLE OR WIRE

Scale: NTS		September 2010
		971–1

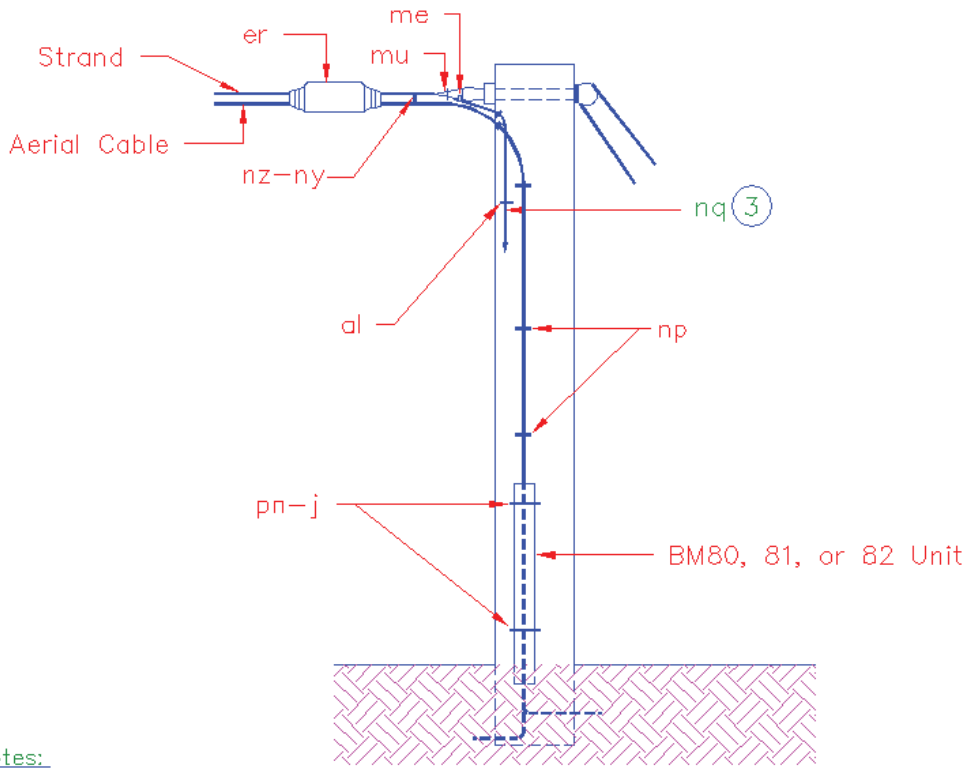

Notes:

(1.) If the aerial conductors are smaller than 22 gauge, splice each aerial cable conductor, to be connected, directly to the main buried cable or wire conductor. If the aerial conductors are 22 gauge or larger, splice each aerial conductor to an 8 in. (203 mm) long 24 gauge insulated copper conductor of the same color as the conductor to be spliced. Splice other end of the 24 gauge conductor to the proper buried cable or wire conductor of the main lead.

(2.) If necessary, remove insulation from under one clamp on support strand to obtain electrical bond between frame of ready–access enclosure and support strand.

(3.) If specified by the Engineer, install a #6 AWG bare ground wire and connect the ground wire to the grounding electrode from the support deadend sleeve to a ground electrode.

ITEMS	MATERIALS	ITEMS	MATERIALS
*nq	Wire, ground, bare, #6 AWG copper	*mu	Sleeve, deadend, automatic
*al	Staples, ground wire	*nz	Supports, lashed cable
me	Connector, ground wire	*ny	Spacer, cable
er	Enclosure, ready–access, cable	*j	Screw, lag
*pn	Strap, riser guard		
*np	Clamp, one–hole, offset		

RURAL TELECOMMUNICATIONS CONSTRUCTION PRACTICES
JUNCTION OF AERIAL CABLE WITH BURIED
CABLE OR WIRE

Scale: NTS		September 2010
		971–2

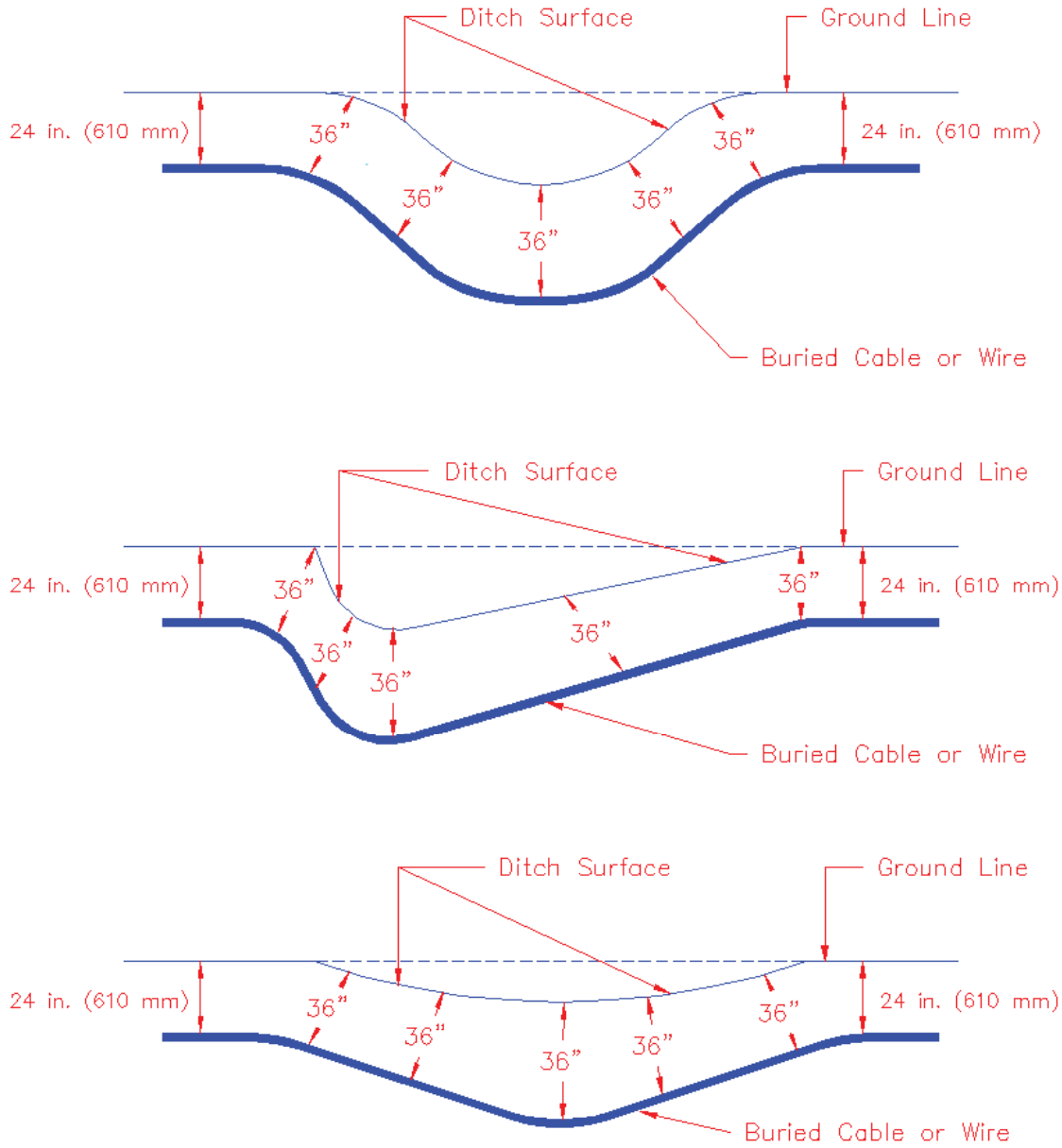

Note: Buried cable, wire, or services shall be placed as shown above. The 36 in. (914 mm) depth shall apply only at locations where the buried plant crosses the ditch, and shall not apply to buried plant installed parallel to and adjacent to the ditch.

RURAL TELECOMMUNICATIONS CONSTRUCTION PRACTICES BURIED PLANT UNDER DITCHES		
Scale: NTS		September 2010
		975

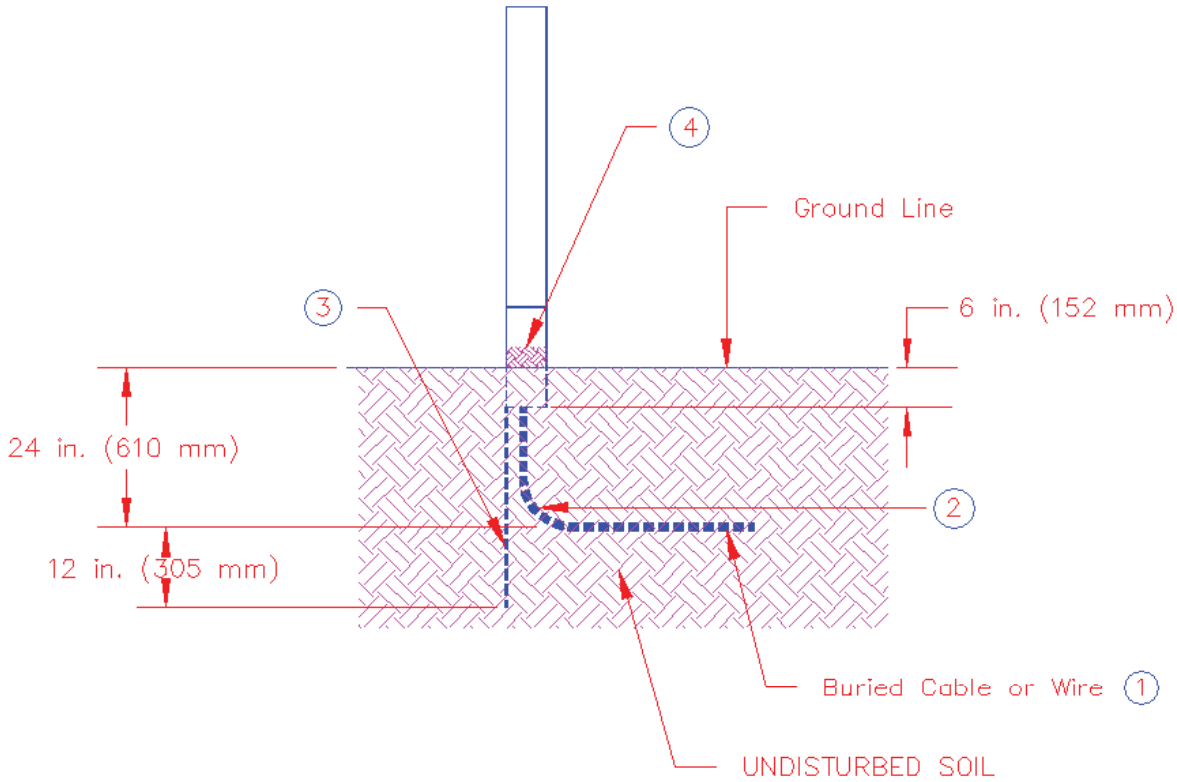

Notes:

1. Cable shall be placed on undisturbed soil at the bottom of the trench.

2. For copper cable and/or wire, the radius of bend of the cable and/or wire at the base of the housing shall not be less than 10 times the diameter of the cable and/or wire. For fiber optic cable, the radius of bend of the cable at the base of the housing shall not be less than 20 times the diameter of the cable.

3. The stake of the housing shall be driven into undisturbed soil to a depth of approximately 12 in. (305 mm).

4. The ground level inside the ground line cover plate shall not be less than 1 in. (25 mm) above the outside ground level.

RURAL TELECOMMUNICATIONS CONSTRUCTION PRACTICES HOUSING INSTALLATION DETAILS		
Scale: NTS		September 2010
		976

Exhibit B

RUS Bulletin 1753F-151 (RUS Form 515b)
Specifications and Drawings for Construction of Underground Plant

United States Department of Agriculture

Rural Utilities Service

RUS Bulletin 1753F-151
RUS Form 515b

September 2001

Specifications and Drawings for Construction of Underground Plant

This page intentionally left blank

UNITED STATES DEPARTMENT OF AGRICULTURE
Rural Utilities Service

BULLETIN 1753F-151

SUBJECT: **Specifications and Drawings for Construction of Underground Plant, RUS Form 515b**

TO: All Telecommunications Borrowers
RUS Telecommunications Staff

EFFECTIVE DATE: September 17, 2001

OFFICE OF PRIMARY INTEREST: Outside Plant Branch, Telecommunications Standards Division.

AVAILABILITY: This bulletin supersedes RUS Bulletin 345-151, Specifications and Drawings for Conduit and Manhole Construction, RUS Form 515c, issued May 25, 1989; and RUS Bulletin 345-152, Specifications and Drawings for Underground Cable Installation, RUS Form 515d, issued May 25, 1989.
This bulletin can be accessed via the Internet at http://www.usda.gov/rus/telecom/publications/bulletins.htm

PURPOSE: This specification provides Contractors, Engineers, and RUS Borrowers with assembly unit descriptions, materials, construction and installation, and drawings for underground plant associated with RUS Form 515, Telecommunications System Construction Contract.

Roberta D. Purcell — 8/21/01

Roberta D. Purcell — Date
Assistant Administrator
Telecommunications Program

RUS Bulletin 1753F-151
Specifications and Drawings for Construction of Underground Plant, RUS Form 515b

TABLE OF CONTENTS

Page

List of Changes..... i
Part I - Description of Assembly Units and Proposal and Contract Sections..... 1
Part II - Specification for Materials..... 9
1. Scope..... 9
2. General..... 9
4. Miscellaneous..... 9
Part III - Specification for Construction and Installations.... 9
1. General..... 9
2. Underground Conduit and Manholes..... 10
3. Underground Handholes..... 13
4. Underground Cable Placement..... 14
List of Construction Drawings and Plans..... 16

INDEX

ASSEMBLY UNITS:
Conduit and Manhole
CABLE:
Assembly Units
CONSTRUCTION:
Fiber Optic Cable Plant
Manholes
Underground Cable (Physical Plant)
Underground Conduit
SPECIFICATIONS AND STANDARDS:
Outside Plant

LIST OF CHANGES

1. Combination of RUS Form 515c and RUS Form 515d.

2. Modification of Section HC to provide compensation on a single pair basis.

3. Modification of Section HO to provide compensation for testing a fiber.

4. Modification of Section PM as follows:
   (a) Redefined PM21 to a more generalized description;
   (b) Added PM22 unit.

5. Elimination of Section U.

6. Modification of Section UD by elimination of suffix "P" and the adding of suffix “V” to allow placement of innerducts in new or existing conduit systems.

7. Modification of the UF and UO units to provide compensation on a per foot basis.

8. Elimination of Section UG.

9. Modification of Section UH to allow for installation in areas of vehicular traffic.

10. Modification of Section UM to indicate precast manholes as the default type.

11. In part III, section 2, added requirement that poured in place manholes are now to be constructed as specified by the Engineer. Other references to poured in place manholes were eliminated.

12. In part III, section 4, added requirement that when blowing of underground cable is specified, the installation shall be in accordance with the manufacturer of the blowing installation equipment.

For editorial or other minor technical changes, refer to the body of the document.

This page intentionally left blank

Part I - DESCRIPTION OF ASSEMBLY UNITS AND PROPOSAL AND CONTRACT SECTIONS

The Contractor's Proposal form is divided into sections and the sections approved for construction shall be listed in the Construction Agreement by the Owner. The sections are as follows:

Section HC	-	Copper Splicing Assembly Units
Section HO	-	Fiber Optic Splicing Assembly Units
Section HU	-	Underground Splice Closure Assembly Units
Section PM	-	Miscellaneous Assembly Units
Section UD	-	Underground Conduit Assembly Units
Section UF	-	Underground Filled Copper Cable Assembly Units
Section UH	-	Underground Handhole Assembly Units
Section UM	-	Precast Manhole Assembly Units
Section UO	-	Underground Filled Fiber Optic Cable Assembly Units

Each assembly unit includes only the materials listed on the corresponding Installation and Construction Guide Drawings or description of unit where no drawing exists. The various installation and construction units, which are included in this Proposal and upon which quotations are required, are defined by the following descriptions:

Section HC - COPPER SPLICING ASSEMBLY UNITS

HC1 Consists of the labor and material necessary in the wire work and splicing of one (1) cable pair in any cable, including any non-working pair in an existing cable in accordance with RUS Splicing Standard Bulletin 1753F-401 (PC-2) using individual mechanical splicing connectors. The splice may be straight, bridged, or pieced out and bridged. Pairs that are to be tested, capped, or tested and capped, when specified by the Engineer are considered to be part of this unit. Only those pairs on which splicing, testing, and/or capping operations are performed are counted and each pair is counted only once at each location. On aerial inserts, each end of the fuse link is considered as a splice.

HC3 Consists of the labor and material necessary in the wire work and splicing of one (1) cable pair in any cable, including any non-working pair in an existing cable in accordance with RUS Splicing Standard Bulletin 1753F-401 (PC-2) using splicing modules. The splice may be straight, bridged or pieced out and bridged. Pairs that are to be tested, capped, or tested and capped, when specified by the Engineer are considered to be part of

this unit. Only those pairs on which splicing, testing, and/or capping operations are performed are counted and each pair is counted only once at each location. On aerial inserts, each end of the fuse link is considered as a splice.

Section HO - FIBER OPTIC SPLICING ASSEMBLY UNITS

Consists of all labor and material necessary to splice and/or test one (1) glass fiber in any cable in accordance with RUS Splicing Standard Bulletin 1753F-401(PC-2). The labor shall include initial measurement, minimizing the attenuation, splicing and stowing the spliced fiber in a fiber organizer. The labor and material for the fiber organizer is part of the appropriate splice closure unit.

Suffix	Description
HO1	Fusion Splice
HO2	Mechanical Splice
HO3	Connector Splice

Section HU - UNDERGROUND SPLICE CLOSURE ASSEMBLY UNITS

Consists of an underground splice closure and the closure manufacturer’s provided encapsulating material if required, installed in place and the labor and material for setting up in preparation for installing the closure, such as, opening the sheath or jacket of the cable, bonding of the cable shields, filling the closure if required, closing the closure, and, when applicable, pressure testing, all in accordance with the manufacturer's instructions. It also includes all necessary hardware items to support the closure and the cable adjacent to the closure on the cable racks in the manhole. Cable splicing shall be compensated under the appropriate splicing units.

The assembly units are defined as follows:

HUF( ) Underground Filled Closure - A filled splice closure with pair count and gauge for each cable to be spliced.

HU0( ) Underground Filled Fiber Optic Closure - A fiber optic closure and organizer with the number of fibers to be housed in the organizer.

HUP( ) Underground Pressurized Closure - A pressurized splice closure with pair count and gauge for each cable to be spliced.

The following illustrations indicate the method of designating the material required.

HUF(100-24)	Underground filled closure enclosing two cable ends same pair count and gauge.
HUP(200-24)(100-24)	Underground pressurized closure enclosing two cable ends with different pair counts.
HUF(600-24)(200-24)(200-24)(200-22)	Underground filled closure enclosing four cable ends with pair counts and gauges as shown.
HUO(24)	Underground filled fiber optic splice closure and organizer capable of accommodating a minimum of 24 fibers.

Section PM - MISCELLANEOUS ASSEMBLY UNITS

Consists of all labor and materials to construct and install the units defined individually below required for the installation and construction of the underground cable portions of the Project.

PM21 Cable Entrance – Consists of the necessary labor and material to terminate copper and/or fiber optic outside plant cables as shown on the detailed drawings as specified by the Engineer.

PM22 Grounding System – Consists of the necessary labor and material to construct a grounding system as shown on the detailed drawings as specified by the Engineer. This unit shall include all ground electrodes, trenching, backfilling, bonding the auxiliary ground electrodes to each other and to the primary ground electrodes, and bonding to the master ground bar (MGB).

Section UD - UNDERGROUND CONDUIT ASSEMBLY UNITS

Consists of one (1) foot [0.305 meters (m)] of single or multiduct conduit in place. This unit includes all material and labor for the placement of the conduit to the depth indicated in the specifications.

The assembly unit is defined as follows:

UD ( ) Underground Conduit

The number of conduits placed horizontally, and vertically, and the inside diameter (distance between opposite walls for square conduit), shall be indicated in the parentheses.

Options designated by the following suffixes apply:

Suffix	Description
E	This unit consists of necessary labor and materials to encase the conduit in concrete. (Encasement shall consist of a 2 inch (in.) [51 millimeters (mm)] minimum cover over the conduit(s), a minimum of 1-1/2 in. (38 mm) at the sides and a minimum of 2 in. (51 mm) for the base.)
S	This unit consists of the necessary labor and materials to encase the conduit in sand or fine earth. (Encasement shall consist of a 4 in. (102 mm) cover over the conduit(s), a minimum of 1-1/2 in. (38 mm) at the sides and a minimum of 3 in. (76 mm) for the base.)
B	This unit consists of the necessary labor and materials to provide a concrete base for the conduit assembly unit as determined by the Engineer. (Concrete base will be 3 in. (76 mm) in thickness for the width of the trench.)
C	This unit consists of the necessary labor and materials to provide a concrete cover for the conduit assembly unit as determined by the Engineer. (The concrete cover shall have a minimum thickness of 3 in. (76 mm) and shall be at least as wide as the conduit.)
A	This unit consists of the necessary labor and materials to remove and restore paved surfaces. All work shall be performed as required in accordance with federal, state and/or local construction standards in effect at the time of bid date.

V This unit consists of the necessary labor and materials to place one or more vacant innerduct(s) in a conduit. The parentheses for the UD unit shall indicate the number of innerducts followed by the inside diameter of the innerduct to be placed in new or existing conduit, including rodding and cleaning of the conduit if necessary.

A. This unit also includes:

(1) All labor and material required for conduit jointing, such as, conduit bends, couplings, adapters, fittings, plugs or seals, and spacers.

(2) All material and labor required in the repair of streets, roads, sidewalks, drives, fences, lawns, shrubbery, trees, watermains, pipes, pipelines and contents, underground power and telecommunications facilities, and any other incidental property damaged during the installation of underground conduit.

(3) All labor and material for trenching, shoring, backfilling, tamping, and disposal of water and excess or unusable material.

(4) All labor required for rodding and cleaning of conduit as specified by the Engineer. When rodding and cleaning are not specified by the Engineer, these actions shall be in accordance with Part III, Section 2.10.

B. The length of conduit for compensation purposes is determined by taking the sum of distances paralleling the conduit between manholes or between manholes and termination points as specified by the Engineer.

The following illustrations indicate the method of designating the material required.

UD(4x4-2)E	Indicates concrete encased conduit having four ducts horizontally by four ducts vertically, (16 ducts total), with each duct having an inside diameter of 2 in. (51 mm).
UD(4x3-3-1/2)B	Indicates a concrete base for a conduit having 4 ducts horizontally by 3 ducts vertically, (12 ducts total), with each duct having an inside diameter of 3-1/2 in. (89 mm).

UD(3-1.25)V	Indicates 3 innerducts of 1.25 in. (31 mm) inside diameter to be placed in a new or existing conduit.

Section UF - UNDERGROUND FILLED COPPER CABLE ASSEMBLY UNITS

Consists of 1 foot (0.305 m) of underground filled copper cable installed in underground conduits and manholes. This unit also consists of setting up the cable within the manhole, providing and placing cable supports and cable rack hooks, pulling-in wires, duct seals or plugs, cable tags, manhole cable racks and rodding and cleaning of ducts all as required in accordance with the detailed plans and specifications. This unit includes bonding together of all closures, but does not include cable closure assemblies or cable splicing in manholes. The splicing and closures will be specified separately. The length of cable for compensation purposes is determined by measuring the distances paralleling the cable plus the vertical lengths of cable installed on supporting structures. This unit shall include the cleaning out and/or pumping out of manholes when specified by the Engineer in advance of bidding.

Options designated by the following suffixes apply:

Suffix	Description
H	Screened cable designated for T1 carrier systems.
H1C	Screened cable designated for T1C carrier systems.

Each underground filled copper cable assembly unit is listed in accordance with the number of pairs and gauge of conductors. Each unit is prefixed by the letters UF. The following illustration indicates the method of designating the material required.

UF600-24H1C	A 600 pair, 24 gauge underground filled copper cable with a screen designated for T1C carrier systems.

Section UH - UNDERGROUND HANDHOLE ASSEMBLY UNITS

Consists of labor and material for one (1) underground handhole installed in place, including the base, top cover and mounting hardware, and pea gravel. The handhole size, amount of pea gravel and the installation shall be as specified by the Engineer. The handhole assembly unit shall be used only in areas of non-vehicular traffic. When required for use in areas of vehicular traffic, the handhole shall be rated to withstand vehicular traffic. Where specified, vehicular traffic rated handholes shall be suffixed with the letter "T".

The assembly units are defined as follows:

UHC( ) Underground Handhole for copper systems.
UHF( ) Underground Handhole for fiber optic systems.

The dimensions of length, width, and depth of the handhole shall be indicated in the parentheses in inches (millimeters).

Examples:

UHC(13x24X24) Underground handhole for copper systems with dimensions of 13 x 24 x 24 in. (330 x 610 x 610 mm)(approximate).

UHF(17x30x30)T Underground handhole for fiber optic systems with dimensions of 17 x 30 x 30 in. (432 x 762 x 762 mm) (approximate) which is rated for vehicular traffic.

Section UM - PRECAST MANHOLE ASSEMBLY UNITS

Consists of all labor and material necessary to install a precast concrete manhole in place. The unit shall include pit excavation, masonry materials, collar, manhole frame and cover, pulling-in irons, and other materials necessary to make an appropriate installation in accordance with the Construction Sheets. In addition, precast manhole assembly units also include all material and labor required in the repair and/or replacement of streets, roads, drives, fences, lawns, shrubbery, watermains, pipes, pipelines and contents, underground power and telecommunications facilities, buried sewerage and drainage facilities and any other property damaged during the construction of the manhole assembly unit. Backfilling shall include backfill compaction, removal of excess materials and site clearing. Each manhole is listed as a separate unit installed in place.

All manhole unit designations shall begin with the letters UM followed by a letter to indicate the type of the manhole and conduit arrangements shown in the unit drawings. The letters "A", "L", "T", "J", "X", or "Y" indicate rectangular manholes, and the letter "V" indicates a V-shaped manhole.

Immediately following the letter indicating the manhole type shall be a fourth letter, which shall indicate the type of frame, and cover with which the manhole is to be equipped. The letter "R" indicates a light duty frame and cover. The letter "B" indicates a heavy duty frame and cover. Following the letter indicating frame and cover type, and enclosed in parentheses shall be the nominal diameter of the frame opening in inches (millimeters).

Examples:

UM-AR(24)	Rectangular manhole equipped with a 24 in. (610 mm) light duty frame and cover.
UM-VB(30)	V shaped manhole equipped with a 30 in. (762 mm) heavy duty frame and cover.

UO - UNDERGROUND FILLED FIBER OPTIC CABLE ASSEMBLY UNITS

Consists of one (1) foot (0.305 m) of underground filled fiber optic cable installed in underground conduit and manholes. This unit also consists of setting up the cable within the manhole, providing and placing cable supports and cable rack hooks, pulling-in wires, duct seals or plugs, cable tags, manhole cable racks, and rodding and cleaning of ducts, all as required in accordance with the detailed plans and specifications. This unit does not include cable closure assembly or cable splicing. They will be specified separately. The length of cable for compensation purposes is determined by measuring the distances paralleling the cable plus the vertical lengths of cable installed on supporting structures. This unit shall include cleaning out and/or pumping out of manholes when specified by the Engineer in advance of bidding.

Each underground filled fiber optic cable assembly unit is listed in accordance with the number of optical fibers. Each unit is prefixed by the letters UO. The following illustration indicates the method of designating the material required.

UO24	An underground filled fiber optic cable with 24 fibers.

Part II - SPECIFICATION FOR MATERIALS

1. SCOPE

This part of the specification is concerned with the various materials required for the construction of underground plant of a rural telecommunications system as shown on the Plans, Specifications, and Construction Sheets.

2. GENERAL

All materials used in the construction of the rural telecommunications system except those listed in Paragraph 3 below shall be listed in RUS Informational Publication (IP) 344-2, "List of Materials Acceptable for Use on Telecommunications Systems of RUS Borrowers," unless specific written approval has been granted by the Administrator.

3. MISCELLANEOUS

Items which do not appear in RUS IP 344-2, "List of Materials Acceptable for Use on Telecommunications Systems of RUS Borrowers," shall be of a quality suitable for the application for which they are intended.

Part III - SPECIFICATIONS FOR CONSTRUCTION AND INSTALLATION

1. GENERAL

1.1 All construction and installation work shall be done in a thorough and workmanlike manner in accordance with the Plans, Specifications and Construction Sheets and shall be subject to acceptance by the Owner and the Administrator.

1.2 All material to be used in construction of the Project shall be stored so as to be protected from deteriorating effects of the elements.

1.3 All underground cables and accessory materials used in the construction of the Project shall be handled with care. Each reel of underground cable shall be inspected for damage. Prior to installation, all damage shall be repaired to the satisfaction of the Engineer. If reel wrap is present, the reel wrap shall remain intact on the reel until the cable is ready to be placed.

1.4 Deviations from the Plans, Specifications and Construction Sheets shall not be permitted except upon written permission of the Engineer.

1.5 The latest revision of the National Electrical Safety Code (NESC) and the National Electrical Code (NEC) shall be followed in every case except where local regulations are more stringent, in which case local regulations shall govern.

2. UNDERGROUND CONDUIT AND MANHOLES

2.1 The underground conduit and manhole system shall be constructed in accordance with the instructions given herein unless otherwise specified by the Engineer or unless state or local requirements are more stringent in which case the latter requirements will govern.

2.2 The Engineer shall determine the location of all conduit and manholes and shall specify size, type, position, and depth at which they are to be constructed. The size, type and location of all main conduit and subsidiary ducts, location of foreign structures where known; and applicable right-of-way restrictions shall be shown on the Construction Sheets. The size, type, and location of all conduit entrances and size and location of the manhole frame opening shall be shown on the Construction Sheets.

2.3 All parties associated with excavations for the conduit and manhole system shall follow well-established safety rules and regulations to safeguard the public and workmen.

2.3.1 Testing shall be conducted in excavations and manholes to determine if there is an oxygen deficiency or a presence of harmful gas, in accordance with federal, state, and/or local requirements.

2.3.2 Gas and oil mains shall be given special attention and precautions shall be taken to guard against the fire hazards they present. Excavations in public streets shall always be checked for gas leakage, even though gas mains or sewers are not directly encountered. No flame of any sort shall be permitted around excavations when the odor of gas is detected. Workmen shall not be allowed to smoke; and precautions shall be taken to prevent pedestrians from throwing lighted cigars, cigarettes, or burning matches into such excavations. The owning company shall be notified when excavation involving such structures is undertaken so that a representative may be present if desired.

2.3.3 The Contractor shall provide adequate shoring, warning signs, lights, no parking signs, barricades, and removal of excess water and excavated material. Flagmen and guards shall be provided where required to maintain safe conditions for the workmen and the public.

2.3.4 Blasting shall only be permitted with approval from state or local authorities and with the warning to and protection of workmen and the public.

2.3.5 Excavations shall be closed and/or barricaded for public protection prior to leaving the job site at night with warning lights and/or guards.

2.3.6 Accessibility to fire hydrants, fire alarm boxes, and private driveways shall be maintained using temporary bridges over trenches as required.

2.4 The Contractor shall notify utilities, local authorities, regulatory bodies, and others when construction is to commence. When conflicts are encountered involving the relocation of manholes or conduits, the Engineer shall be notified.

2.5 Where deviations from the Construction Sheets are necessary or desirable, such construction shall proceed only with prior approval by the Engineer.

2.6 The depth of the trench shall be sufficient to obtain a cover of at least 24 in. (610 mm) over the conduit formation including top protection where employed unless otherwise approved by the Engineer.

2.7 The trench route and manhole locations shall be clearly marked by the Engineer before excavation is started.

2.8 In preparing the trench bed for the conduit installation, the trench bed shall be leveled to form an even base. In some cases it may be necessary to provide sand or fine earth to establish an even base. If, upon excavation, the trench bed appears to be incapable of firmly supporting the conduit, the Engineer shall determine whether a concrete base is required.

2.9 Backfilling next to the conduit shall be free from stones or other material which might damage the conduit or conduit joints. Large boulders shall not be included in any part of the backfill. In tamping the backfill at the sides of the conduit, extreme care shall be used to avoid damage to the joints or shifts in the conduit structure. Backfilling and tamping alongside the conduit shall be done in layers only an inch or two in thickness until the level of the top of the conduit is reached. Backfilling around conduit joined with mortar bandages shall proceed as soon as the joints are completed. Troweled joints shall be allowed to set at least 24 hours before backfilling.

2.10 Upon completion of conduit sections, a test mandrel 1/4 in. (6.4 mm) smaller in diameter than the inside diameter of the conduit shall be pulled through all single duct conduit and through two diagonally opposite ducts in multiduct conduit formations to ensure proper alignment. In addition, all conduits shall be cleaned of loose materials such as concrete, mud, dirt, stones, etc. Pull wire (type as specified by the Engineer) shall be placed in conduit if so indicated by the Engineer on the Construction Sheets. The ends of the conduit shall be sealed to prevent the entrance of foreign matter and to protect against water or gas from entering manholes of buildings. All conduit entering central offices or other buildings shall be kept plugged at all times. If the work extends over several days, the conduits shall be plugged at night temporarily and permanently upon completion of the work.

2.11 Where sod and/or top soil has been removed, finish off the surface of the trench with top soil and/or sod as removed. This work shall be done to the satisfaction of the property owner and authorities.

2.12 All surplus material and debris shall be promptly cleared from the job site.

2.13 All cement used in underground construction shall be Portland cement and shall conform to the latest specification for Portland cement of the American Society for Testing and Materials.

2.14 Cement shall be kept dry at all times prior to use in order to prevent deterioration. No cement shall be used which contains lumps, which will not pulverize readily in the hand. The presence of such lumps indicates that the cement has absorbed moisture and has deteriorated.

2.15 To ensure that concrete used in manhole construction will be watertight, water shall be prevented from flowing through or over the freshly placed concrete and washing away the cement paste. Admixtures shall not be used for the purpose of producing watertight concrete.

2.16 Each precast manhole shall be provided with hardware and equipment as specified below and shown in the Construction Sheets.

2.16.1 Type A, L, T, J, and V manholes shall be provided with either 37-hole or 18-hole cable racks as shown in the Construction Sheets. When 18-hole racks are used, they shall be attached to cable rack supports with three cable rack supports required for each set of two 18-hole racks. Type X and Y manholes shall be

provided with 8-hole racks as shown in the Construction Sheets. The cable racks shall be attached to the supports by means of 1/2 in. x 1-3/4 in. (12.7 mm x 44.4 mm) galvanized machine bolts and nuts. The cable rack supports shall be secured to the manhole walls by means of 1/2 in. x 2-1/2 in. (12.7 mm x 63.5 mm) galvanized machine bolts screwed into metal inserts which shall be cast in the walls when the manhole is constructed.

2.16.2 Rectangular manholes, except Type X and Y, shall be provided with four cable racks or sets of cable racks as shown in the Construction Sheets. Type Y manholes shall be provided with two racks and Type X manholes shall be provided with one rack as shown on the Construction Sheets.

2.16.3 Type V manholes shall be provided with six cable racks or sets of cable racks as shown on the Construction Sheets.

2.16.4 One pulling-in iron shall be cast in the wall opposite each conduit with which it is associated and shall be installed in accordance with the Construction Sheets.

2.17 The frame shall be supported on a collar as shown in the Construction Sheets. The collar shall be of sufficient height to bring the cover flush with the grade of the street or surrounding earth.

2.18 The sump or drain shall be located directly under the manhole cover.

2.19 Pulling-in irons shall be placed so as to extend into the manhole far enough to permit a clear opening of approximately 3 in. (76.2 mm) in the eye.

2.20 When poured-in-place manholes are specified, the construction and installation of the poured-in-place manhole shall be as specified by the Engineer.

3. UNDERGROUND HANDHOLES

3.1 The underground handholes shall be installed in accordance with the instructions given herein unless otherwise specified by the Engineer unless state or local requirements are more stringent in which case the latter requirements will govern.

3.2 The Engineer shall determine the location of the handhole and shall specify type, position and depth of installation.

3.3 A hole shall be dug large enough to accommodate the handhole.

3.4 The handhole shall be positioned and a suitable backfill shall be tamped around the handhole.

3.5 Pea gravel should be placed inside of the handhole to minimize condensation problems.

3.6 The Engineer shall ensure that the dimensions of the handhole shall be large enough to accommodate the splice case installation and when required, cable slack.

4. UNDERGROUND CABLE PLACEMENT

4.1 Prior to entry, testing shall be conducted in excavations and manholes to determine if there is an oxygen deficiency or a presence of harmful gas, in accordance with federal, state, and/or local requirements.

4.2 When working in manholes, care shall be taken to prevent damage to the cables in setting up the pulling apparatus or in placing tools or hardware. Cables shall not be stepped upon when entering or leaving the manhole.

4.3 Cable reels, which are delivered to the work location and are not set up immediately for placing operations shall be securely blocked or secured to a substantial support to prevent rolling.

4.4 The Contractor and Engineer shall jointly verify distances between splice points prior to ordering cable in specific cut lengths.

4.5 The duct assignment for each individual cable for any conduit section shall be specified on the Construction Sheets. Cables shall not be placed in ducts other than those specified on the Construction Sheets without prior approval of the Engineer.

4.6 It shall be the Contractor's responsibility to determine whether ducts assigned for occupancy shall be rodded and cleaned.

4.7 All ducts containing earth, sand or gravel shall be cleaned. Ducts, which cannot be cleaned, shall be reported to the Engineer.

4.8 Reels shall be rolled in the direction indicated by the arrows painted on the reel flanges.

4.9 Cable reels shall be set up on the same side of the manhole as the conduit section in which the cable is to be placed. The reel shall be leveled and brought into proper alignment with the conduit section so that the cable pays off from the top of the reel in a long smooth bend into the duct without twisting. Under

no circumstances shall the cable be payed off from the bottom of a reel.

4.10 The Contractor shall check the equipment set up prior to beginning the cable pulling to avoid an interruption once pulling has started.

4.11 A cable feeder guide of suitable dimensions shall be used between the cable reel and the face of the duct to protect the cable and guide it into the duct as it is payed off the reel. Copper cable shall not be bent to a radius of less than 10 times the diameter of the cable. Fiber optic cable shall not be bent to a radius of less than 20 times the diameter of the cable.

4.12 The mechanical stress placed upon a cable during installation shall not be such that the cable is twisted or stretched. During installation, the Contractor shall not exceed the maximum pulling tension of the cable as specified by the cable manufacturer.

4.13 As the cable is payed off the reel, it shall be carefully inspected for jacket defects. If defects are noticed, the pulling operations shall be stopped immediately and the Engineer will determine what corrective action shall be taken.

4.14 As the cables are payed off the reel into the cable feeder guide, they shall be sufficiently lubricated with a type of lubricant recommended by the cable manufacturer. Where the cable is pulled through a manhole it shall also be sufficiently lubricated at the intermediate manhole.

4.15 Cable placement shall be stopped immediately if the cable on a reel binds or does not pay off freely. The cause of the binding must be cleared to the satisfaction of the Engineer before the pulling operation is continued.

4.16 When blowing of underground cable is specified, the installation shall be in accordance with the manufacturer of the blowing installation equipment.

4.17 Sufficient cable shall be provided in each manhole to properly rack and splice the cables as shown on the Construction Sheets.

4.18 All cable ends, shall be protected at all times with acceptable end caps except during actual splicing. During the splicing operations, protection shall be available for immediate installation in case water.

LIST OF CONSTRUCTION DRAWINGS AND PLANS

	Construction Guide Drawings
UM-A, L, T, J	Types A, L, T and J Precast Manholes
UM-V	Type V Precast Manhole
UM-X, Y	Types X and Y Precast Service Manholes

Typical Arrangements of Main Conduit
Entrances in Rectangular Precast Manholes

Type "A" Precast Manhole

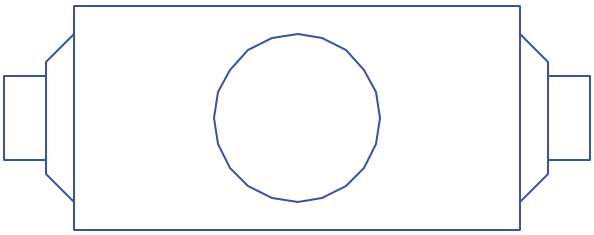

Type "L" Precast Manhole

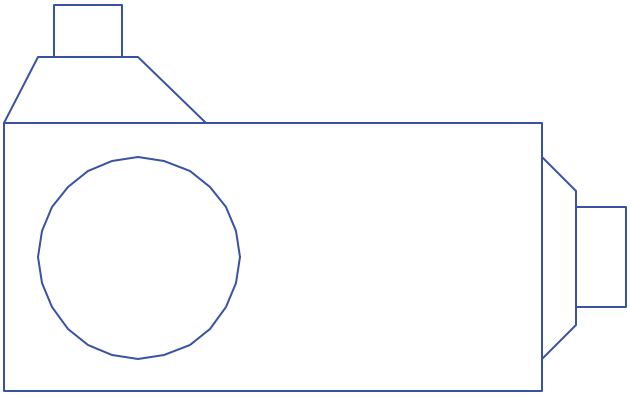

Type "T" Precast Manhole

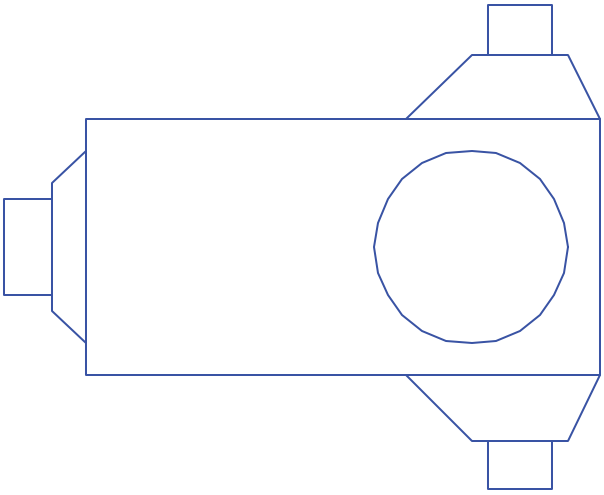

Type "J" Precast Manhole

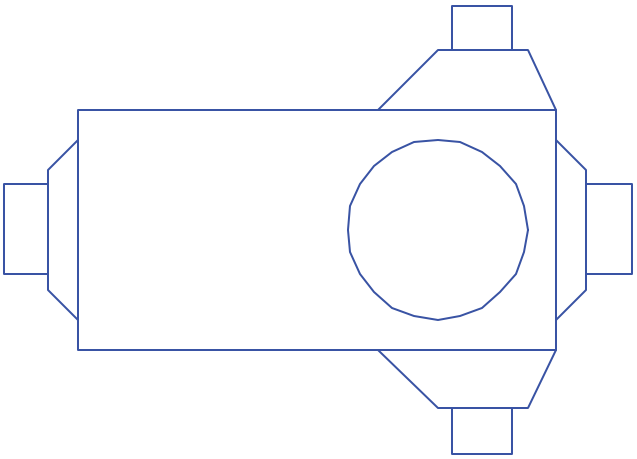

RURAL TELECOMMUNICATIONS CONSTRUCTION PRACTICES TYPES A, L, T AND J PRECAST MANHOLES		
Scale: NTS		March 2001
		UM-A,-L,-T,-J

Typical Arrangement of Main Conduit Entrances in Type "V" Precast Manholes

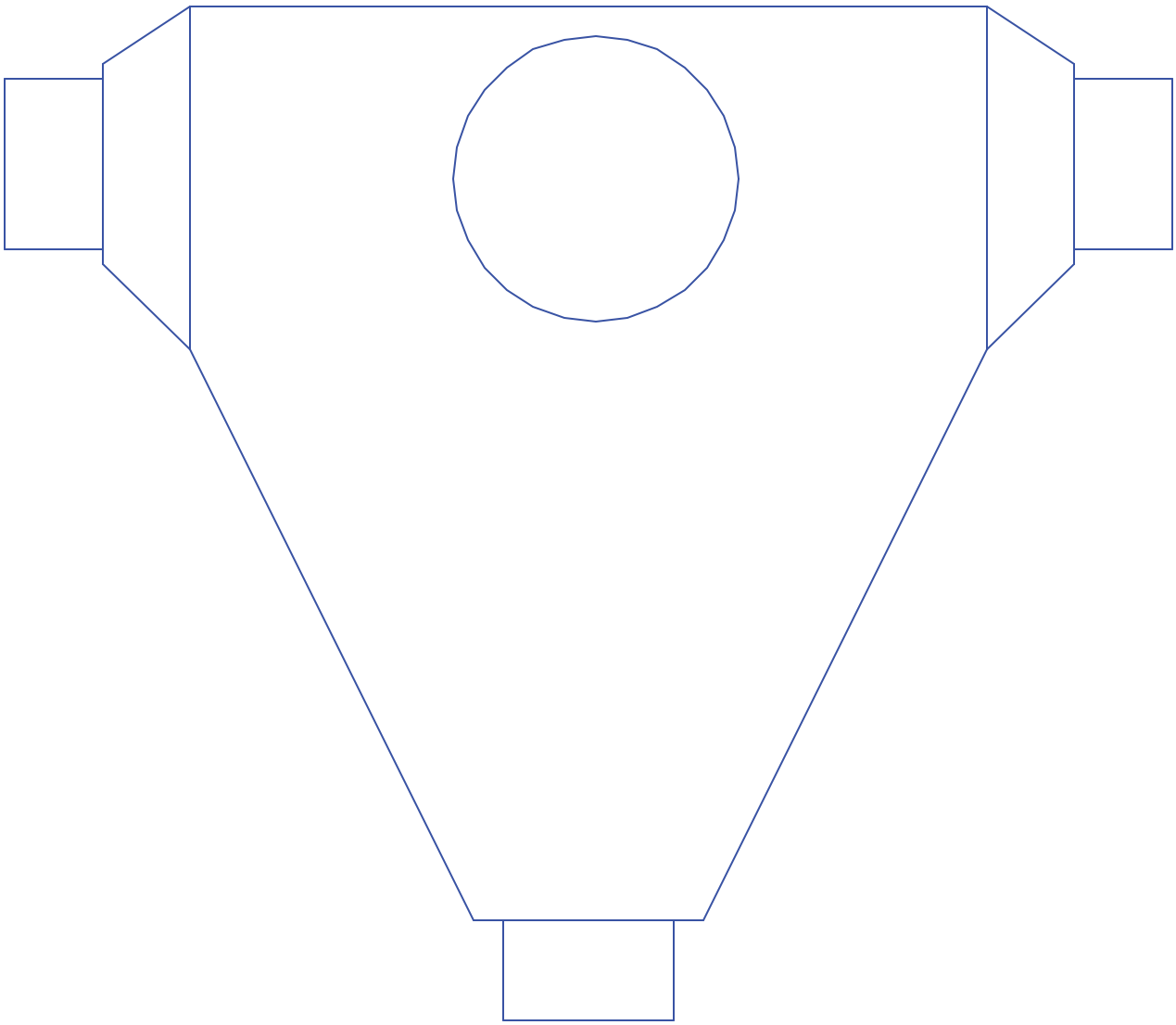

RURAL TELECOMMUNICATIONS CONSTRUCTION PRACTICES TYPE V PRECAST MANHOLE		
Scale: NTS		March 2001
		UM-V

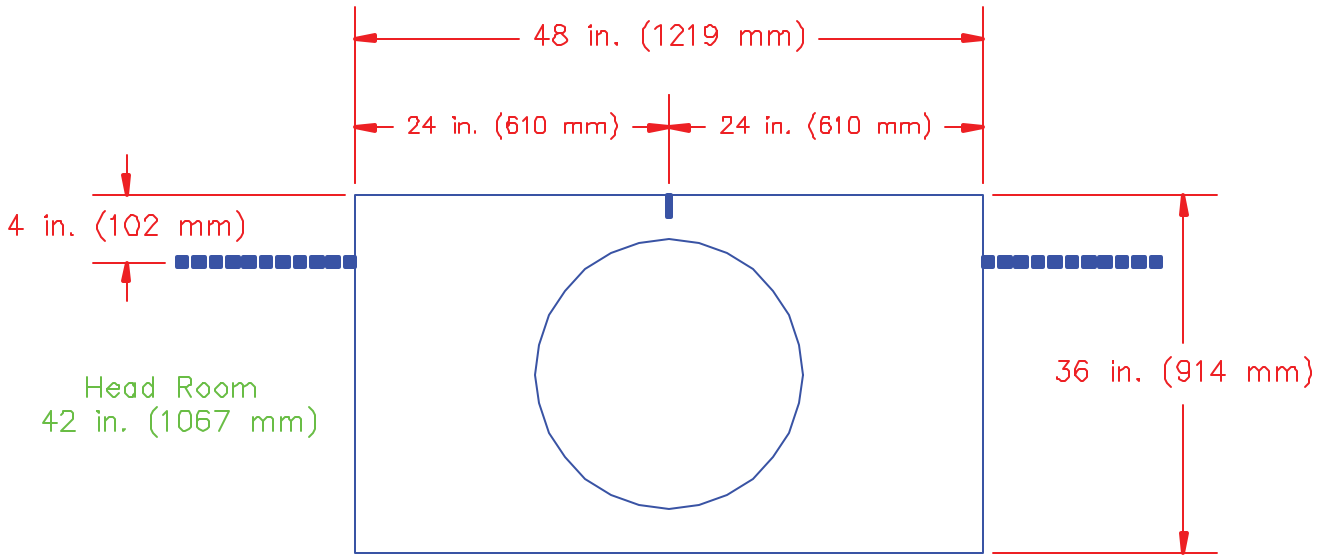

Type X Precast Service Manhole

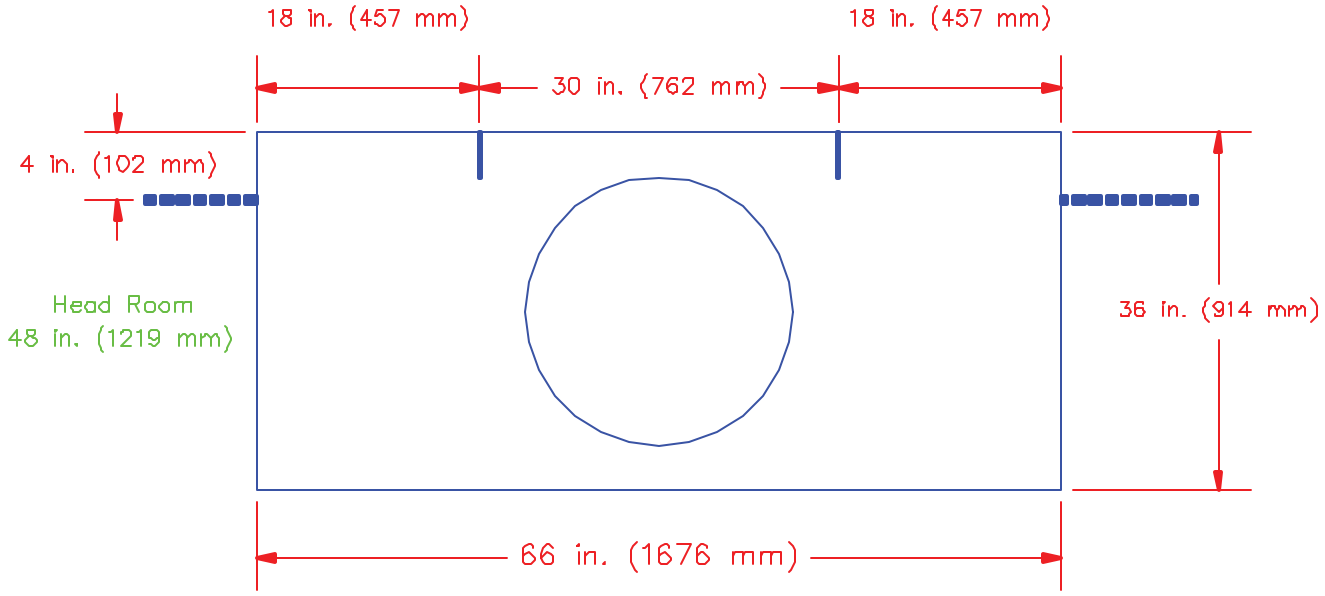

Type Y Precast Service Manhole

Note: All dimensions shown are recommended minimum inside dimensions.

RURAL TELECOMMUNICATIONS CONSTRUCTION PRACTICES TYPES X AND Y PRECAST SERVICE MANHOLES		
Scale: NTS		March 2001
		UM-X,-Y

Exhibit C

RUS Bulletin 1753F-152 (RUS Form 515c)
Specifications and Drawings for Construction of Aerial Plant

United States Department of Agriculture

Rural Utilities Service

RUS Bulletin 1753F-152
RUS Form 515c

September 2001

Specifications and Drawings for Construction of Aerial Plant

This page intentionally left blank

UNITED STATES DEPARTMENT OF AGRICULTURE
Rural Utilities Service

BULLETIN 1753F-152

SUBJECT: **Specifications and Drawings for Construction of Aerial Plant, RUS Form 515c**

TO: All Telecommunications Borrowers
RUS Telecommunications Staff

EFFECTIVE DATE: September 17, 2001

OFFICE OF PRIMARY INTEREST: Outside Plant Branch, Telecommunications Standards Division.

AVAILABILITY: This bulletin supersedes RUS Bulletin 345-153, Specifications and Drawings for Construction of Pole Lines, Aerial Cables and Wires, RUS Form 515f, issued May 25, 1989. This bulletin can be accessed via the Internet at http://www.usda.gov/rus/telecom/publications/bulletins.htm

PURPOSE: This specification provides Contractors, Engineers, and RUS Borrowers with assembly unit descriptions, materials, construction and installation, and drawings for aerial plant associated with RUS Form 515, Telecommunications System Construction Contract.

Roberta D. Purcell — 8/21/01

Roberta D. Purcell
Assistant Administrator
Telecommunications Program

Date

RUS Bulletin 1753F-152
Specifications and Drawings for Construction of
Aerial Plant, RUS Form 515c

TABLE OF CONTENTS

Page

List of Changes i
Part I - Description of Assembly Units and Proposal and Contract Sections 1
Part II - Specifications and Materials 14
1. Scope 14
2. General 14
3. Poles 14
4. Miscellaneous 14
Part III - Specifications for Construction and Installation 14
1. General 14
2. Pole Lines 15
3. Mounting Hardware and Guys 17
4. Anchors 17
5. Self Supporting Fiber Optic Cable 18
6. Suspension Strand 19
7. Filled Aerial Cable 20
8. Filled Aerial Cable Placement 20
9. Cable Splicing and Terminals 22
10. Clearing Right-of-Way 23
List of Construction Drawings and Plans 24

INDEX

ASSEMBLY UNITS:
Cable Plant, Aerial
CABLE:
Aerial Cable Plant Construction
Assembly Units
CONSTRUCTION:
Aerial Cable Plant
Fiber Optic Cable Plant
POLES LINES:
Design of
POLES:
Numbering
RIGHT-OF-WAY:
Clearing and Trimming Assembly Units
SPECIFICATIONS AND STANDARDS:
Outside Plant
WIRE:
Seven Wire Aluminum Clad Steel Strand
Steel, 7 Wire Galvanized Strand

LIST OF CHANGES

1. Modification of Pole Units from Section 1 to Section A.

2. Elimination of Section C and Section CF.

3. Addition of Section CFO, Self Supporting Filled Fiber Optic Cable Assembly Units.

4. Modification of CO and CW units as follows:
   (a) Provide for compensation on a per foot basis;
   (b) Redefined compensation to include the sum of the cable distances between supporting structures as indicated by the sequential foot markings;
   (c) Specified utility grade galvanized steel strand as the default type.

5. Elimination of suffixes "N" and "R" under Section HA. For ready access splice closures specified under the "R" suffix, a new unit designated HR was created.

6. Addition of Section HR, Ready Access Splice Closure Assembly Unit.

7. Modification of Section HC as follows:
   (a) Redefined unit to provide compensation on a single pair basis;
   (b) Created HC5 unit in order to provide compensation for terminating cable pairs on a terminal block within a ready access closure.

8. Modification of Section HO to provide compensation for testing a fiber.

9. Elimination of section PC and section PDS.

10. Modification of Section PE to indicate utility grade galvanized steel as the default type.

11. Elimination of Section PG. The terminal blocks are now included under Section PM.

12. Modification of PM21 and PM22 to provide for a more generalized description.

13. Addition of PM25, Filled Terminal Block Assembly Unit.

14. Modification of Section R to provide compensation on a per foot basis.

15. In part III, section 2, elimination of information on pole facing.

16. In part III, the Figure 8 cable was changed to describe Self Supporting Fiber Optic Cable.

17. In part III, eliminated references to load coils, pressurized cable, and air-core cable.

For editorial or other minor technical changes, refer to the body of the document.

Part I - DESCRIPTION OF ASSEMBLY AND PROPOSAL AND CONTRACT SECTIONS

The Contractor's Proposal form is divided into sections and the sections approved for construction shall be listed in the Construction Agreement by the Owner. The sections are as follows:

Section A	-	Pole Units
Section CFO	-	Self Supporting Filled Fiber Optic Cable Assembly Units
Section CO	-	Aerial Filled Fiber Optic Cable Assembly Units
Section CW	-	Aerial Filled Copper Cable Assembly Units
Section HA	-	Aerial Splice Closure Assembly Units
Section HC	-	Copper Splicing Assembly Units
Section HO	-	Fiber Optic Splicing Assembly Units
Section HR	-	Ready Access Closure Assembly Units
Section PE	-	Guy Assembly Units
Section PF	-	Anchor Assembly Units
Section PM	-	Miscellaneous Assembly Units
Section R	-	Right-of-Way Clearing and Trimming Units
Section W	-	Rearrangement Units
Section XX	-	Nonreusable Materials Removal Units
Section XZ	-	Reusable Materials Removal Units

Each assembly unit includes only the materials listed on the corresponding Installation and Construction Guide Drawings or description of unit where no drawing exists. The various installation and construction units, which are included in this Proposal and upon which quotations are required, are defined by the following descriptions:

Section A - POLE UNITS

Consists of one (1) pole in place. It does not include the pole top assembly units or other parts attached to the pole. Poles shall be of the height and class as designated by the Engineer. The pole plan, species of timber, kind of preservative and method of treatment are designated in the Proposal.

Example:

A35-7 A 35 foot [10.7 meters (m)] class 7 pole.

Section CFO - SELF SUPPORTING FILLED FIBER OPTIC CABLE ASSEMBLY UNITS

Consists of one (1) foot (0.305 m) of self supporting filled fiber optic cable in place including all supporting hardware, cable guards, insulating tapes, and bonding of the armor (when present) and supporting member in accordance with the Construction Sheets.

A. The length of the self supporting cable measured for compensation purposes includes the sum of the cable distances between supporting structures as indicated by the sequential foot markings.

B. This unit does not include labor and material for fiber splicing, splice closures, housings, or organizers. The labor and material for these items are provided for in other units.

C. This unit includes the spiraling of the self supporting cable in accordance with the method shown in the Construction Sheets.

Each self supporting filled fiber optic cable unit is listed in accordance with the number of optical fibers. Each unit is prefixed by the letters CFO. The following illustration indicates the method of designating the material required.

CFO16	A self supporting filled fiber optic cable with 16 fibers.

Section CO - AERIAL FILLED FIBER OPTIC CABLE ASSEMBLY UNITS

Consists of one (1) foot (0.305 m) of aerial filled fiber optic cable in place including supporting messenger of galvanized steel strand, lashing wire, attachments to strand, bonding of the armor (when present) and strand in accordance with the Construction Sheets.

Options designated by the following suffixes apply:

Suffix	Description
A	Aluminum-clad steel strand.
C	Class C galvanized steel utility grade strand for corrosion areas.

D Two or more cables are to be initially lashed to the same suspension strand.

E Cables are lashed to existing strand and cable(s).

A. The length of aerial cable measured for compensation purposes includes the sum of the cable distances between supporting structures as indicated by the sequential foot markings.

B. This unit does not include labor and material for fiber splicing, splice closures, housings or organizers. The labor and material for these items are provided for in other units.

C. Class A galvanized steel utility grade strand shall be provided unless another type is specified by the appropriate suffix.

Each aerial filled fiber optic cable assembly unit is listed in accordance with the number of optical fibers. Each unit is prefixed by the letters CO. The following illustrations indicate the method of designating the material required.

CO16(6M) An aerial filled fiber optic cable with 16 fibers, supported by 6000 pound (lbs) [26,688 Newtons (N)] Class A galvanized steel utility grade strand.

CO8E An aerial filled fiber optic cable with 8 fibers, lashed to existing strand and cables(s).

Section CW - AERIAL FILLED COPPER CABLE ASSEMBLY UNITS

Consists of one (1) foot (0.305 m) of aerial filled copper cable in place including supporting messenger of galvanized steel strand, lashing wire, attachments to strand, bonding of the shield and strand in accordance with the Construction Sheets.

Options designated by the following suffixes apply:

Suffix	Description
A	Aluminum-clad steel strand.
C	Class C galvanized steel utility grade strand is required for corrosion areas.
D	Two or more cables are to be initially lashed to the same suspension strand.
E	Cables are to be lashed to existing strand and cable(s).

H	Screened cable designated for T1 carrier systems.
H1C	Screened cable designated for T1C carrier systems.

A. This unit includes labor and material for installation of the splice closure, and other labor and materials for straight splicing cables of the same size and gauge required only for the purpose of joining such cables in one continuous length (reel ends).

B. When specified in the Proposal, this unit includes the spiraling of cable around the suspension strand at the locations shown on the Construction Sheets.

C. The length of aerial cable measured for compensation purposes includes the sum of the cable distances between supporting structures as indicated by the sequential foot markings.

D. Where aerial cables are supported by separate through-bolts on the same pole, messenger bonds required as shown on the Construction Sheets are included as a part of this unit.

E. Class A galvanized steel utility grade strand shall be provided unless another type is specified by the appropriate suffix.

Each aerial filled copper cable assembly unit is listed in accordance with the number of pairs and gauge of conductors. Each unit is prefixed by the letters CW. The following illustrations indicate the method of designating the material required.

CW50-24(6M)	A 50-pair, 24-gauge aerial filled copper cable supported by 6000 lbs (26,688 N) Class A galvanized steel utility grade strand.
CW50-24(6M)C	A 50-pair, 24-gauge aerial filled copper cable supported by 6000 lbs (26,688 N) Class C galvanized steel utility grade strand.

Section HA - AERIAL SPLICE CLOSURE ASSEMBLY UNITS

Consists of an aerial splice closure and the closure manufacturer’s provided encapsulating material if required, installed in place and the labor and material for setting up in preparation for installing the closure, such as, opening the sheath or jacket of the cable, bonding of cable shields, filling the closure if required, closing the closure, and, when applicable, pressure testing, all in accordance with the manufacturer's instructions. It also includes all necessary hardware items to support the cable adjacent to the closure and to

terminate the lashing wire. Cable splicing shall be compensated under the appropriate splicing units.

The assembly units are defined as follows:

HAC( )	Aerial Free-Breathing, Nonfilled Closure - A free-breathing, nonfilled splice closure with pair count and gauge for each cable to be spliced.
HAF( )	Aerial Filled Closure - A filled splice closure with pair count and gauge for each cable to be spliced.
HAP( )	Aerial Pressurized Closure - A pressurized splice closure with pair count and gauge for each cable to be spliced.

For Fiber Optic applications use the following suffix:

Suffix	Description
O	Splice closure and organizer for fiber optic cables. The closure manufacturer shall specify the appropriate organizer.

The following illustrations indicate the method of designating the material required.

HAC(100-24)	Aerial free-breathing, nonfilled splice closure enclosing two cable ends with same pair count and gauge.
HAF(100-24)(50-24)	Aerial filled splice closure enclosing two cable ends with different pair counts.
HACO(24)	Aerial free-breathing, nonfilled fiber optic splice closure and organizer capable of accommodating a minimum of 24 fibers.
HAP(100-24)	Aerial pressurized splice closure enclosing two cable ends with same pair count and gauge.
HAPO(12)	Aerial pressurized fiber optic splice closure and organizer capable of accommodating a minimum of 12 fibers.

Section HC - COPPER SPLICING ASSEMBLY UNITS

HC1 Consists of the labor and material necessary in the wire work and splicing of one (1) cable pair in any cable, including any non-working pair in an existing cable in accordance with RUS Splicing Standard Bulletin 1753F-401 (PC-2) using individual mechanical splicing connectors. The splice may be straight, bridged, or pieced out and bridged. Pairs that are to be tested, capped, or tested and capped, when specified by the Engineer are considered to be part of this unit. Only those pairs on which splicing, testing, and/or capping operations are performed are counted and each pair is counted only once at each location. On aerial inserts, each end of the fuse link is considered as a splice.

HC3 Consists of the labor and material necessary in the wire work and splicing of one (1) cable pair in any cable, including any non-working pair in an existing cable in accordance with RUS Splicing Standard Bulletin 1753F-401 (PC-2) using splicing modules. The splice may be straight, bridged or pieced out and bridged. Pairs that are to be tested, capped, or tested and capped, when specified by the Engineer are considered to be part of this unit. Only those pairs on which splicing, testing, and/or capping operations are performed are counted and each pair is counted only once at each location. On aerial inserts, each end of the fuse link is considered as a splice.

HC5 Consists of the labor and material necessary for terminating one (1) pair on a terminal block within a ready access closure, including a non-working pair in existing cables in accordance with RUS Splicing Standard Bulletin 1753F-401 (PC-2). Pairs that are to be tested, when specified by the Engineer, are considered to be part of this unit.

Section HO - FIBER OPTIC SPLICING ASSEMBLY UNITS

Consists of all labor and material necessary to splice and/or test one (1) glass fiber in any cable in accordance with RUS Splicing Standard Bulletin 1753F-401(PC-2). The labor shall include initial measurement, minimizing the attenuation, splicing and stowing the spliced fiber in a fiber organizer. The labor and material for the fiber organizer is part of the appropriate splice closure unit.

Suffix	Description
HO1	Fusion Splice
HO2	Mechanical Splice
HO3	Connector Splice

Section HR - READY ACCESS SPLICE CLOSURE ASSEMBLY UNITS

Consists of a ready access closure containing unprotected filled terminal blocks installed in place and includes the labor and material for setting up in preparation for installing the ready access closure, such as, opening the sheath or jacket of the cable, bonding of cable shields, and closing the closure in accordance with the manufacturer's instructions. It also includes all necessary hardware items to support the cable adjacent to the closure and to terminate the lashing wire. Cable splicing shall be compensated under the appropriate splicing units. When protected filled terminal blocks are to be specified, the unit shall be suffixed by the letter "P".

Ready access closures not containing filled terminal blocks shall be suffixed with the letter "U". Under this option, installation of filled terminal blocks shall be compensated under other units.

The assembly units are defined as follows:

HR1( )( ) A straight splice ready access closure.

HR2( )( ) A branch splice ready access closure.

The first set of parentheses shall indicate the main cable diameter (dia.), in inches (in.) [millimeters (mm)], as shown in the illustration. The second set of parentheses shall indicate the number of terminals within the ready access closure. When the unit is suffixed with the letter "U" the second set of parentheses is not applicable.

The following illustrations indicate the method of designating the material required.

HR1(2.0)(12) Ready access closure, accommodating a straight splice with a maximum cable diameter of 2.0 in. (50.8 mm), and equipped with filled terminal blocks with a total of 12 terminations.

HR2(1.0)(6)	Ready access closure, accommodating a branch splice with a maximum cable diameter of 1.0 in. (25.4 mm), and equipped with filled terminal blocks with a total of 6 terminations.
HR1(2.0)U	Ready access closure, accommodating a straight splice with a maximum cable diameter of 2.0 in. (50.8 mm), without any terminal blocks installed.

Section PE - GUY ASSEMBLY UNITS

Consists of strand and hardware; and insulators or ground connection where required. For guying purposes, when a cable messenger strand is extended one or more spans to a deadend structure, the strand in each such span shall be considered as an overhead guy for the appropriate size of strand used.

The assembly units are defined as follows:

PE1-2	Down Guy for 6M strand
PE1-3	Down Guy for 10M strand
PE1-4	Down Guy for 16M strand
PE1-2G	Down Guy, Ground Connection Type for 6M strand
PE1-3G	Down Guy, Ground Connection Type for 10M strand
PE1-4G	Down Guy, Ground Connection Type for 16M strand
PE2-2	Overhead Guy for 6M strand
PE2-3	Overhead Guy for 10M strand
PE2-4	Overhead Guy for 16M strand
PE2-2G	Overhead Guy, Ground Connection Type for 6M strand
PE2-3G	Overhead Guy, Ground Connection Type for 10M strand
PE2-4G	Overhead Guy, Ground Connection Type for 16M strand

Note: When the above Guy Assembly Units are to be installed on existing poles, the assembly unit designation is prefixed by the letter "N".

Unless otherwise indicated by an additional suffix, the strand furnished on the Project will be seven-wire, Class A galvanized steel utility grade. The following suffix may be used:

Suffix	Type of Strand
A	Aluminum - Clad steel
C	Class C galvanized steel utility grade

Section PF - ANCHOR ASSEMBLY UNITS

Consists of the anchor with rod, complete and in place, ready for attaching the guy strand.

The assembly units are defined as follows:

PF1-3	Expanding Anchor	-	6,000 lbs	(26,688 N)
PF1-5	Expanding Anchor	-	10,000 lbs	(44,480 N)
PF1-7	Expanding Anchor	-	16,000 lbs	(71,168 N)
PF2-3	Plate Anchor	-	6,000 lbs	(26,688 N)
PF2-5	Plate Anchor	-	10,000 lbs	(44,480 N)
PF2-7	Plate Anchor	-	16,000 lbs	(71,168 N)
PF3-3	Screw Anchor	-	6,000 lbs	(26,688 N)
PF3-5	Screw Anchor	-	10,000 lbs	(44,480 N)
PF3-7	Screw Anchor	-	16,000 lbs	(71,168 N)
PF5-3	Rock Anchor	-	3/4 in. dia. (19 mm) rod	
PF5-4	Rock Anchor	-	1 in. dia. (25.4 mm) rod	
PF6-3	Swamp Anchor	-	10 in. dia. (254 mm)	
PF6-4	Swamp Anchor	-	12 in. dia. (305 mm)	
PF6-5	Swamp Anchor	-	15 in. dia. (381 mm)	

Note: When twineye rods are required for the above anchor assembly units, the unit designation is suffixed by the letter "A".

Section PM - MISCELLANEOUS ASSEMBLY UNITS

Consists of all labor and materials to construct and install the units defined individually below required for the installation and construction of the aerial portions of the Project:

PM1	Pole Lightning Protection Assembly
PM2	Pole Ground Assembly
PM2-1	Auxiliary Ground Rod Assembly
PM2A	Ground wire assembly for bonding aerial cable strand or support wire to electric system neutral or pole ground assembly.
PM4	Cable Extension Arm (Short)
PM4A	Cable Extension Arm (Long)
PM5	Pole Stepping Assembly
PM6	One Wood Pole Key

PM7	Two Wood Pole Keys
PM8	One Wood Key and One Metal Expanding Key
PM9	Two Wood Keys and One Metal Expanding Key
PM11	Guy Guard
PM12( )	Consists of all labor and material to install a sidewalk guy arm. The guy, guy guard and anchor assembly units will be specified separately. The length in feet (meters) of a single piece of 2 in.(50.8 mm) galvanized steel pipe shall be indicated in the parentheses.
PM14	Push Brace Accessories
PM21	Cable Entrance - Consists of the necessary labor and material to terminate copper and/or fiber optic outside plant cables as shown on the detailed drawings as specified by the Engineer.
PM22	Grounding System - Consists of the necessary labor and material to construct a grounding system as shown on the detailed drawings as specified by the Engineer. This unit shall include all ground electrodes, trenching, backfilling, bonding the auxiliary ground electrodes to each other and to the primary ground electrodes, and bonding to the master ground bar (MGB).
PM25( )	Filled Terminal Block Assembly Unit - Consists of an unprotected filled terminal block, mounted in place in a ready access closure (separately specified) and connected to the conductors of the cable as specified by the Engineer. Splicing of the cable conductors shall be in accordance with RUS Splicing Standard Bulletin 1753F-401 (PC-2). The pair count of the terminal block shall be indicated in the parentheses. When protected filled terminal blocks are to be specified, the unit shall be suffixed by the letter "P".
PM52	Pole Marking, Per Pole, Route and Pole Number.

Section R - RIGHT-OF-WAY CLEARING AND TRIMMING UNITS
Aerial Plant

A. Clearing Units are defined as follows:

R1-5 Is one (1) foot (0.305 m) in length and 5 feet (1.52 m) in width (to be measured on one side of the pole line) of actual clearing of right-of-way. The unit applies to clearing right-of-way along new or existing telecommunications pole lines and along existing power pole lines. This includes clearing of underbrush, tree removal, and such tree trimming as may be required to leave an unobstructed right-of-way from the ground up on one side of the line of poles carrying wire or cable. The length of actual clearing shall be measured in a straight line parallel to the line between poles and across the maximum dimension of foliage cleared (not trunk) projected to the ground line. All trees and underbrush across the width of the right-of-way shall be considered to be grouped together as a single length in measuring the total length of clearing. Lengths along the right-of-way in which no trees are to be removed or trimmed or underbrush cleared shall be omitted from the total measurement. This unit includes the removal, or topping (cutting out the top of the tree so that if the remaining portions of the tree fall, they will not endanger the line) at the option of the Contractor, of danger trees outside of the right-of-way when so designated by the Engineer. (Danger trees are defined as dead or leaning trees, which, in falling, would affect the operation of the line.) The Contractor shall not remove or trim shade, fruit, or ornamental trees unless so directed by the Engineer.

R1-10 Identical to R1-5 except that width is 10 feet (3.05 m).

R2-5 Identical with R1-5, except that width 10 feet (3.05 m); to be measured 5 feet (1.52m) on each side of the pole line.

R2-10 Identical with Rl-5, except that width 20 feet (6.1 m), to be measured 10 feet (3.05m) on each side of the pole line.

Note: The letter "M" added as a suffix to the above "R" units designates units for reclearing existing right-of-way. With the

exception of the substitution of the word "reclearing" for "clearing", the remaining description of the "R" assembly units applies for the units suffixed with the letter "M".

B. The Trimming Unit is defined as follows:

R3-5 Is one (1) foot (0.305 m) in length and consists of the trimming of foliage and branches from trees growing on or adjacent to the right-of-way so as to provide a clearance of not less than 5 feet (1.52 m) in all directions from telecommunications cable. This unit is measured parallel to the pole line across the maximum width of foliage trimmed. All trees, underbrush or shrubbery across the width trimmed shall be considered to be grouped together as a single length in measuring the total length of trimming. Lengths along the right-of-way in which no trimming is performed shall be omitted from the total measurement. Any trimming included in Rl or R2 right-of-way clearing units, shall not be considered a part of the measurement of the unit. The Contractor shall not trim any shade, fruit or ornamental trees unless so directed by the Engineer. When so designated by the Engineer, a tree may be trimmed of its branches with the trunk left extending into the zone to be trimmed.

Section W - REARRANGEMENT UNITS

Specific rearrangement units shall be designated and described by the Engineer on the "List of Special Arrangement Units" table of RUS Form 515. Existing plant assembly units to be rearranged are designated by a prefix "W".

Section XX - NONREUSABLE MATERIALS REMOVAL UNITS

These units cover the furnishing of all labor for the removal of construction assembly units from existing lines, and transportation of the removed materials for proper disposal. The Contractor will be permitted to use the most economical method of removing these units. The removal units are designated by the prefix "XX" followed by the assembly unit designation of the unit to be removed.

Section XZ - REUSABLE MATERIALS REMOVAL UNITS

These units cover the furnishing of all labor for the removal of construction assembly units from existing lines and all labor and transportation of the removed materials to a location designated by the Owner. The Contractor will be charged by the Owner for

the materials removed under this section at the unit material values shown in column 2 of the "Value and Disposition of Units to be Removed" table of RUS Form 515. The number of units to be charged to the Contractor and the extended value of these units are shown in columns 3 and 4. Such charges will be placed against the Contractor as assembly units are removed and the unit material values will be deducted from the total value of assembly units constructed on this project for determination of the work accomplished for purposes of the monthly progress payments to the Contractor. Of the assembly units listed in the "Value and Disposition of Units to be Removed" table to be removed from existing lines certain units are to be reused in the construction of the project. The quantity of such units to be reused is listed in the "Value and Disposition of Units to be Removed" table, column 5. These units where installed in the project will be inventoried as new assembly units and compensated for at the unit bid prices. The quantity of assembly units listed in column 6 of the "Value and Disposition of Units to be Removed" table is the maximum quantity of removed assembly units that are to be returned to the Owner for credit which will be allowed at the unit material prices in column 2. Column 7 indicates the extended value of the units to be returned to the Owner. The Contractor will be allowed credit for assembly units listed in column 6 which, in the opinion of the Engineer, have not been damaged by the Contractor in removal and handling. Such credits will be allowed the Contractor as the assembly units are returned to a location designated by the Owner and shall be added to the total value of installed assembly units for determination of work accomplished for the purposes of the monthly progress payments to the Contractor. The removal units are specified by the prefix "XZ" followed by the assembly unit designation of the existing assembly unit to be removed.

Part II - SPECIFICATIONS FOR MATERIALS

1. SCOPE

This part of the specification is concerned with the various materials required for the construction of the outside aerial cable plant of the rural telecommunications system as shown on the Plans, Specifications, and Construction Sheets.

2. GENERAL

All materials used in the construction of the rural telecommunications system except those listed in Paragraph 4 below shall be listed in RUS Informational Publication (IP) 344-2, "List of Materials Acceptable for Use on Telecommunications Systems of RUS Borrowers," unless specific written approval has been granted by the Administrator.

3. POLES

3.1 The pole plan, method of treatment, kind of preservative and general procedure applying to all poles shall be in accordance with the latest RUS specifications for these items in effect at the time the bids are received. All poles shall be framed in accordance with the framing guide attached to the specifications.

3.2 Poles shall be of the length and American National Standards Institute, Inc. (ANSI) class specified in the Proposal.

4. MISCELLANEOUS

Items which do not appear in RUS IP 344-2, "List of Materials Acceptable for Use on Telecommunications Systems of RUS Borrowers," shall be of a quality suitable for the application for which they are intended.

Part III - SPECIFICATIONS FOR CONSTRUCTION AND INSTALLATION

1. GENERAL

1.1 All construction and installation work shall be done in a thorough and workmanlike manner in accordance with the Plans, Specifications and Construction Sheets and shall be subject to acceptance by the Owner and the Administrator.

1.2 All material to be used in construction of the Project shall be stored so as to be protected from deteriorating effects of the elements.

1.3 All guy strand, suspension strand, aerial cables, and accessory materials used in the construction of the Project shall be handled with care. Each reel of aerial cable shall be inspected for damage. All damage shall be repaired to the satisfaction of the Engineer and in accordance with the methods or other instructions described in the appropriate paragraphs of Part III. If reel wrap is present, the reel wrap shall remain intact on the reel until the cable is ready to be placed.

1.4 Deviations from the Plans, Specifications and Construction Sheets shall not be permitted except upon written permission of the Engineer.

1.5 The latest revision of the National Electrical Safety Code (NESC) and the National Electrical Code (NEC) shall be followed in every case except where local regulations are more stringent, in which case local regulations shall govern.

1.6 The Contractor shall maintain conductor polarity (tip and ring) identification at the main distributing frame, cable terminals, wire terminals, terminal blocks, and in the service entrance, all in accordance with the Specifications and Construction Sheets (see guide drawing 815).

2. POLE LINES

2.1 Poles shall be handled carefully. Damaged poles shall not be used.

2.2 The pole hole shall be of sufficient diameter to permit the pole to settle freely to the bottom of the hole without trimming the butt and still have sufficient space between the pole and the sides of the hole to permit proper tamping of the backfill at every point around the pole, and throughout the entire depth of the hole.

2.3 The setting depth, in feet (or meters), for poles of various lengths shall be as follows:

Length of Pole	Setting in Soil	Setting in Solid Rock
20 (6.10)	4.0 (1.22)	3.0 (0.91)
25 (7.62)	5.0 (1.52)	3.5 (1.07)
30 (9.14)	5.5 (1.68)	3.5 (1.07)
35 (10.67)	6.0 (1.83)	4.0 (1.22)
40 (12.19)	6.0 (1.83)	4.0 (1.22)
45 (13.72)	6.5 (1.98)	4.5 (1.37)
50 (15.24)	7.0 (2.13)	4.5 (1.37)
55 (16.76)	7.5 (2.29)	5.0 (1.52)
60 (18.29)	8.0 (2.44)	5.0 (1.52)

2.4 The "Setting in Soil" depth as shown in paragraph 2.3, shall apply where poles are to be set in soil only; where there is a layer of soil more than 2 feet (0.61 m) in depth over solid rock; or where the pole in solid rock is not substantially vertical or the diameter of the hole at the surface of the rock exceeds approximately twice the diameter of the pole at the same level.

2.5 The "Setting in Solid Rock" depth as shown in paragraph 2.3, shall apply where solid rock is encountered at the ground line and where the hole is substantially vertical, approximately uniform in diameter, and large enough to permit the use of tamping bars the full depth of the hole.

2.6 Where there is a layer of soil 2 feet (0.61 m) or less in depth over solid rock, the depth of the hole shall be the depth of the soil in addition to the depth specified in paragraph 2.3 under "Setting in Solid Rock," provided, however, that such depth shall not exceed the depth specified under "Setting in Soil."

2.7 On sloping ground the depth of the hole shall be measured from the low side of the hole. Where a pole is to be set on the side of a steep grade where soil erosion appears to be a consideration, the hole should be one (1) foot (0.305 m) deeper than specified in paragraph 2.3 under "Setting in Soil."

2.8 When an earth boring machine is employed for holes for guyed poles, the bottom of the hole shall be thoroughly tamped to compact any loose earth that may be present.

2.9 All holes shall be backfilled with soil or small rock and all pole holes in rock shall be inspected and approved by the Engineer before being backfilled.

2.10 Backfill shall be thoroughly tamped the full depth of the pole hole. Earth must be banked around the pole to a minimum height of 6 in. [15.24 centimeters (cm)] above ground level.

2.11 Holes in soil for poles at unguyed corners where the pole will not be keyed shall be one (1) foot (0.305 m) deeper than the "Setting in Soil" depth as shown in paragraph 2.3. For holes in solid rock the "Setting in Solid Rock" depth will apply.

2.12 The Contractor shall be responsible for setting poles in alignment according to the staking sheets. If the Contractor should find stakes out of alignment, the Engineer shall, upon request of the Contractor, realign the stakes according to the construction sheets.

2.13 Poles shall be set plumb except at corners where they shall be set and raked against the load so that the pole top will be in line after the load is applied. The rake in pole shall not exceed 6 in. (15.24 cm) for each 10 feet (3.05 m) of pole length after the conductors are installed at the required tension. Deadend shall be set so as to be plumb and in line after the load it applied.

2.14 Pole lightning protection shall be a #6 AWG bare copper wire installed in accordance with assembly unit drawing PM1.

3. MOUNTING HARDWARE AND GUYS

3.1 All bolts employed for the mounting of hardware items on poles shall be long enough to fully engage the nut (including locknut, where applicable) but shall not extend more than 2 in. (50.8 mm) beyond the nut after the nut is tightened. The ends of bolts shall not be cut.

3.2 The Engineer shall determine all guy locations and shall specify the type of guy. Guys shall be installed before conductors or cable suspension strands are placed.

4. ANCHORS

4.1 Anchor assembly units shall be installed at locations designated on the construction sheets.

4.2 All anchors and rods shall be in line with the load and shall be so installed that the eye of the rod is above grade. Not more than 6 in. (152 mm) of rod shall remain out of the ground after the load is applied.

4.3 When an expansion type anchor is used, the anchor shall be fully expanded and shall be expanded into undisturbed earth before backfilling the anchor hole.

4.4 Backfill shall be thoroughly tamped the full depth of all anchor holes.

4.5 Rock anchors shall be placed in accordance with the detailed instructions of the Engineer. Where a rock is encountered below the surface of the ground, instructions from the Engineer shall be obtained before placing an anchor at that location.

5. SELF SUPPORTING FIBER OPTIC CABLE

5.1 Where physical obstructions make it necessary to pull cable along the line from a stationary reel, cable stringing blocks shall be used to support the cable during all placing and tensioning operations. Ladders, cable cars and other equipment shall not be placed on or against the cable.

5.2 Splicing of the optical fibers shall be performed in accordance with RUS Splicing Standard Bulletin 1753F-401 (PC-2). Splicing of the support member shall be performed in accordance with the method specified by the Engineer.

5.3 During installation, maximum pulling tension and minimum bending radius of the self supporting fiber optic cable shall not exceed the cable manufacturer's recommendations.

5.4 Initial stringing tension, maximum permissible span length, and sagging shall be in accordance with the cable manufacturer's recommendations.

5.5 Self supporting fiber optic cable shall be spiraled in accordance with the method shown on Construction Guide Drawing 250-1. Spiraling of the cable shall be performed within 24 hours of the tensioning operation.

5.6 The insulation shall not be removed from the support member except at bonding and ground points; and at points where ends of the support member are terminated in splicing and deadend devices.

5.7 The support member of self supporting fiber optic cable shall be made electrically continuous throughout its entire length.

5.8 At junctions between self supporting fiber optic cable and aerial fiber cable, or buried fiber cable, the support messenger shall be bonded to the aerial cable strand or buried cable armor.

5.9 The support member of self supporting fiber optic cable shall be grounded at locations specified by the Engineer by connecting the support wire to a pole ground wire as shown on the Construction Sheets.

5.10 When specified by the Engineer, the insulation of the support member at deadend fittings, splices and bridged grounding connections shall be restored in accordance with the method shown in Construction Guide Drawing 360.

5.11 Damaged portions of the self supporting fiber optic cable shall be cut out and the support member spliced in accordance with the method specified by the Engineer.

6. SUSPENSION STRAND

6.1 The cable shall be installed within a reasonable time after the strand is installed and tensioned. If a delay in installing cable in excess of 24 hours is encountered, temporary dampers shall be installed on the strand.

6.2 When tensioning strand the cable suspension clamps shall be loose enough to allow free movement of the strand.

6.3 Suspension strand shall be placed in accordance with the Construction Sheets and shall be tensioned in accordance with instructions, which shall be furnished, to the Contractor by the Engineer.

6.4 The suspension strand shall be placed on the roadside of the pole line unless otherwise directed by the Engineer.

6.5 In tangent construction, the lip of the suspension strand clamp shall point toward the pole. At angles in the line, the suspension strand clamp lip shall point away from the load.

6.6 In level construction the suspension strand clamp shall be placed in such a manner that it shall hold the strand below the through-bolt. At points where there is an up-pull on the strand, the clamp shall be so placed that it shall support the strand above the through-bolt.

6.7 When a thimbleye bolt is used both to mount the suspension strand clamp and to make the guy attachment, the size of the suspension strand clamp shall be governed by the size of the thimbleye bolt required for the guy.

6.8 The air temperature at the time and place of tensioning the strand shall be determined by means specified by the Engineer.

6.9 The suspension strand shall be made electrically continuous throughout its entire length as indicated on the Construction Sheets.

6.10 Suspension strands shall be bonded to other bare cable suspension strands, and guys on the same pole and grounded by connection to ground leads at locations specified by the Engineer and in the manner specified by the Engineer. Where the strand is to be grounded to a multigrounded neutral on a pole which does not carry a vertical pole ground wire, a #6 AWG bare copper wire shall be left coiled and taped to permit it to be extended up the pole and connected to the multiground neutral by a representative of the power company.

7. FILLED AERIAL CABLE

7.1 The Contractor and Engineer shall jointly inspect all reels of cable for damage prior to installation.

7.2 Cable ends shall be kept sealed at all times, i.e., during transportation, in storage, and during cable placement to prevent moisture entry into the cable core. Acceptable cable end caps shall be used for this purpose.

7.3 Cable shall be taken from the reel only as it is placed. Bends of small radii and twists shall be avoided in handling cable.

7.4 If the jacket is deformed in handling the cable, the Engineer shall be notified. If directed by the Engineer, the deformed section of the jacket shall be removed; the insulation and conductors shall be examined and if damaged shall be repaired. The opening in the jacket shall then be closed by means of a suitable enclosure. Repairs so made shall be done in accordance with appropriate specifications.

8. FILLED AERIAL CABLE PLACEMENT

8.1 During placing operations, copper cables shall not be bent in a radius less than 10 times the outside diameter of the cable and fiber optic cables shall not be bent in a radius less than 20 times the outside diameter of the cable. Temporary supports where necessary, shall be placed sufficiently close together and proper tensioning of the cable shall be employed to prevent bending in excess of the above requirements.

8.2 In those instances where spiraling of cable is involved, the mounting of closures for purposes of splicing and distribution

shall be accomplished after the spiraling operation has been completed.

8.3 Cable guards shall be applied over the cable at points of potential abrasion such as at supports, and in locations where tree trimming is not permitted.

8.4 Cable shall be lashed with lashing wire to the suspension strand by means of a suitable lashing machine.

8.5 The pitch of the lashing wire may be from 10 to 15 in. (254 to 381 mm) but must be constant for any section of cable of the same size and gauge. For cables of 3/4 in. (19 mm) or larger in diameter, the lashing wire shall be placed with a tension of 35 to 40 lbs (156 to 178 N). Cables having a smaller diameter less than 3/4 in. (19 mm) shall be lashed with a lashing wire tension of 18 to 25 lbs (80 to 111 N).

8.6 During the placing operation, precautions shall be taken to prevent slippage of the cable sheath or jacket over the core.

8.7 The cable shall be snug against the suspension strand throughout the span. It shall be supported in a position directly below the strand insofar as possible, except where spiraling has been specified. Where more than one cable is placed on a strand, the cables shall be arranged as shown on the Construction Sheets so that the cables are snug against the suspension strand and against each other.

8.8 The lashing wire shall be terminated at each pole and the cable shall be supported and protected at the suspension clamp in accordance with the Construction Sheets.

8.9 At lashing wire terminating points, the tension placed in the lashing wire by the lashing machine shall be maintained. No slack in the lashing wire shall be permitted to run into the span.

8.10 When lashing wire is spliced in a span, the splice shall be made by means of a compression type splicing sleeve. The completed splice shall be placed on the strand in such a position that it shall not result in damage to the cable sheath or jacket.

8.11 Where suspension strand attachments such as suspension strand cross-over, suspension strand pull-offs, etc., are encountered in the span, a positive separation shall be provided between the suspension strand attachment and the cable, and the cable shall be supported and protected in accordance with the Construction Sheets.

8.12 At splices where the cable is not cut, no slack shall be left in the cable. So that no slack can run into the span, the lashing wire shall be securely clamped to the strand until the splice is completed, at which time the lashing wire shall be terminated in accordance with the Construction Sheets.

8.13 At cut splices in the cable, sufficient overlap shall be provided to permit splicing without piecing out the conductors.

8.14 Spiraling of lashed cable where specified shall be performed in accordance with the method shown on the Construction Guide Drawing 250. Spiraling of the cable shall be performed within 48 hours of the tensioning operation.

8.15 Where the new cable is to be lashed to existing strand and cable(s), the preceding requirements for placement of lashed cable shall also be adhered to, except as modified and/or supplemented as follows:

8.15.1 The cable shall be lashed to the existing strand and cable(s) so that it and the existing cable(s) shall be as snug against the existing strand as is practicable.

Note: If the existing cable is spiraled, the spiraling shall first be removed. The existing cable after unspiraling and the new cable shall then be lashed, without either being spiraled, to the existing strand in the same lashing operation.

8.15.2 The lashing wire shall be terminated on both sides of all splices and devices in/on the existing cable where interference with the lashing operation is encountered.

8.15.3 Cable spacers and cable straps, as required, shall be used at all points of lashing wire termination to maintain proper separation and support for the new cable.

8.15.4 Spacers shall be added to the existing suspension clamp mountings, where required, to maintain proper separation between the cable and the surface of the pole.

8.15.5 Ready-access closures to be installed on the new cable(s) shall be equipped with extension fittings so that they will be located below and separate from the existing cable.

8.16.6 The existing lashing wire, fittings and attachments shall be adjusted as necessary to maintain proper security of the new cable and the existing cable, and to maintain adequate separations and clearances.

9. CABLE SPLICING AND TERMINALS

9.1 Splicing for copper cable and fiber optic cable shall be in accordance with RUS Splicing Standard Bulletin 1753F-401 (PC-2).
9.2 Aerial cable terminals and ready-access closures equipped with filled terminal blocks shall be installed in accordance with the Construction Sheets and connected in accordance with the cable schematic drawings furnished by the Engineer. Splicing shall be performed in accordance with RUS Splicing Standard Bulletin 1753F-401 (PC-2).

10. CLEARING RIGHT-OF-WAY

10.1 In clearing the right-of-way, trees shall be removed or trimmed and underbrush cleared in accordance with the Construction Sheets. Trees fronting the side of the right-of-way shall be trimmed symmetrically unless otherwise directed by the Engineer.

10.2 Dead trees beyond the right-of-way, which would strike the line in falling, shall be removed.

10.3 Leaning trees beyond the right-of-way which would strike the line in falling and which would require topping if not removed, may be removed or topped at the option of the Contractor; however, the Contractor shall trim and not remove shade, fruit, or ornamental trees unless otherwise directed by the Engineer.

LIST OF CONSTRUCTION DRAWINGS AND PLANS

Assembly Unit Drawings

HR1	Ready-Access Enclosure, Lashed Cable Straight Splice
HR2	Ready-Access Enclosure, Lashed Cable Branch Splice
PE1-2, PE1-3, and PE1-4	Down Guy
PE1-2G, PE1-3G, and PE1-4G	Down Guy, Ground Connections
PE2-2, PE2-3, and PE2-4	Overhead Guy
PE2-2G, PE2-3G, and PE2-4G	Overhead Guy, Ground Connections
PF1-3, PF1-5, and PF1-7	Expanding Anchor Assembly
PF3-3, PF3-5, and PF3-7	Screw Anchor Assembly
PF5-3 and PF5-4	Rock Anchor Assembly
PF6-3, PF6-4, and PF6-5	Swamp Anchor Assembly
PM1	Pole Lightning Protection Assembly
PM2	Pole Ground Assembly
PM2-1	Auxiliary Ground Rod Assembly
PM2A	Ground Wire Assembly
PM4	Cable Extension Arm Assembly (Short)
PM4A	Cable Extension Arm Assembly (Long)
PM5	Pole Stepping Assembly
PM6 and PM7	Pole Key Assemblies
PM8 and PM9	Pole Key Assemblies
PM12	Sidewalk Guy Arm Assembly
PM14	Push Brace Accessories
PM52	Pole Marking

Construction Guide Drawings

201	Suspension Strand Mounting
201-1	Self Supporting Filled Fiber Optic Cable Support
202	Suspension Strand Mounting (Pull Away from Pole)
202-1	Suspension Strand Mounting (Pull Against Pole)
202-3	Self Supporting Filled Fiber Optic Cable Support, Corner

203	Suspension Strand Mounting (Corners)
203-1	Self Supporting Filled Fiber Optic Cable Support, Corner
204	Suspension Strand Deadend
206	Branch Suspension Strand
207	Branch Suspension Strand
208	Suspension Strand Pull-Off
209-1	Suspension Strand Bonding
211	False Deadend
212	Strand Layouts
214	Arrangement Details of Cables at Pole Supports
241	Lashed Cable Support at Pole
242	Lashing Wire Terminations
243	Lashing Wire Terminations at Suspension Strand Crossovers
250	Method of Spiraling Aerial Cable
250-1	Method of Spiraling Self Supporting Filled Fiber Optic Cable (Figure 8 Design)
312-1	Aerial Plastic Cable, Details of Wire Connections to Terminal blocks
360	Method of Restoring Insulation on Support Member of Self Supporting Filled Fiber Optic Cable (Figure 8 Design)
812	Guy Hook, Details of Installation
815	Conductor Polarity (Tip and Ring) Diagram (Aerial Plant)

NOTE: On the Assembly Unit or Guide Drawings an asterisk (*) in the ITEM column indicates items that are no longer listed in RUS IP 344-2, "List of Materials Acceptable for Use on Telecommunications Systems of RUS Borrowers."

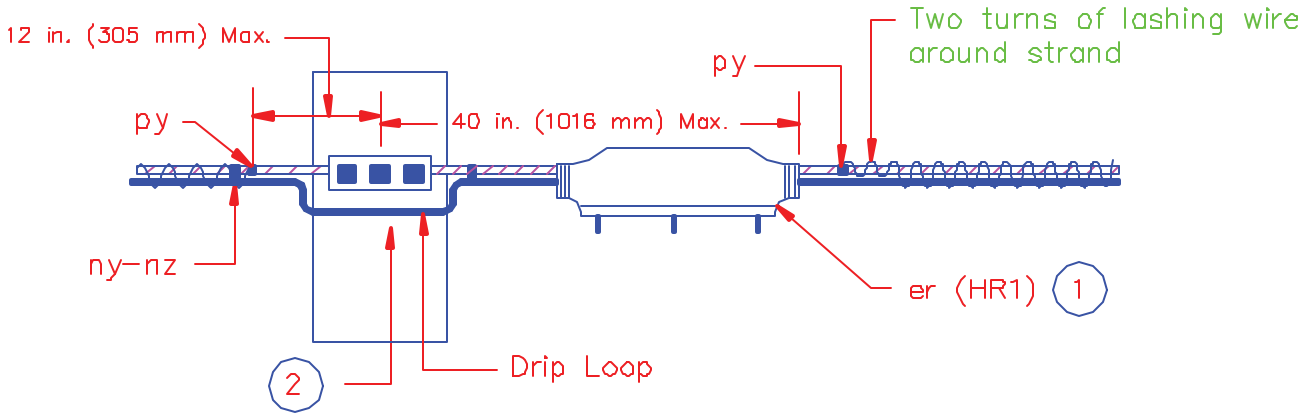

Notes:

1. Select enclosure size for the main cable diameter from 0.4 to 3.0 in. (10 to 76 mm) and install in accordance with the enclosure manufacturer's instructions.

2. Lashed cable supports with the proper size cable spacers shall be used to hold the cable parallel to the strand and clear of the hardware.

		HR1
ITEMS	MATERIALS	NO. REQUIRED
er	Enclosure, ready-access	1
*ny	Spacers, cable	As required
*nz	Supports, lashed cable	As required
*py	Clamps, lashing wire, terminating	As required

RURAL TELECOMMUNICATIONS CONSTRUCTION PRACTICES
READY-ACCESS ENCLOSURE
LASHED CABLE - STRAIGHT SPLICE

Scale: NTS		March 2001
		HR1

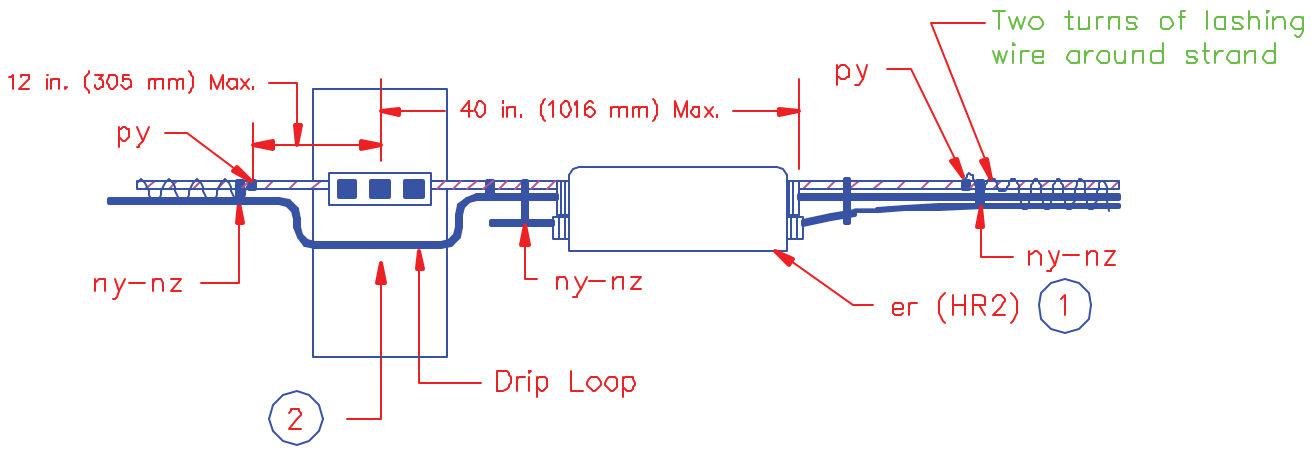

Notes:

1. Select enclosure size for the main cable diameter from 0.4 to 3.0 in. (10 to 76 mm) and install in accordance with the enclosure manufacturer's instructions.

2. Lashed cable supports with the proper size cable spacers shall be used to hold the cable parallel to the strand and clear of the hardware.

		HR2
ITEMS	MATERIALS	NO. REQUIRED
er	Enclosure, ready–access	1
*ny	Spacers, cable	As required
*nz	Supports, lashed cable	As required
*py	Clamps, lashing wire, terminating	As required

RURAL TELECOMMUNICATIONS CONSTRUCTION PRACTICES
READY–ACCESS ENCLOSURE
LASHED CABLE – BRANCH SPLICE

Scale: NTS		March 2001
		HR2

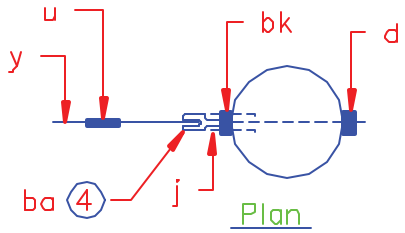

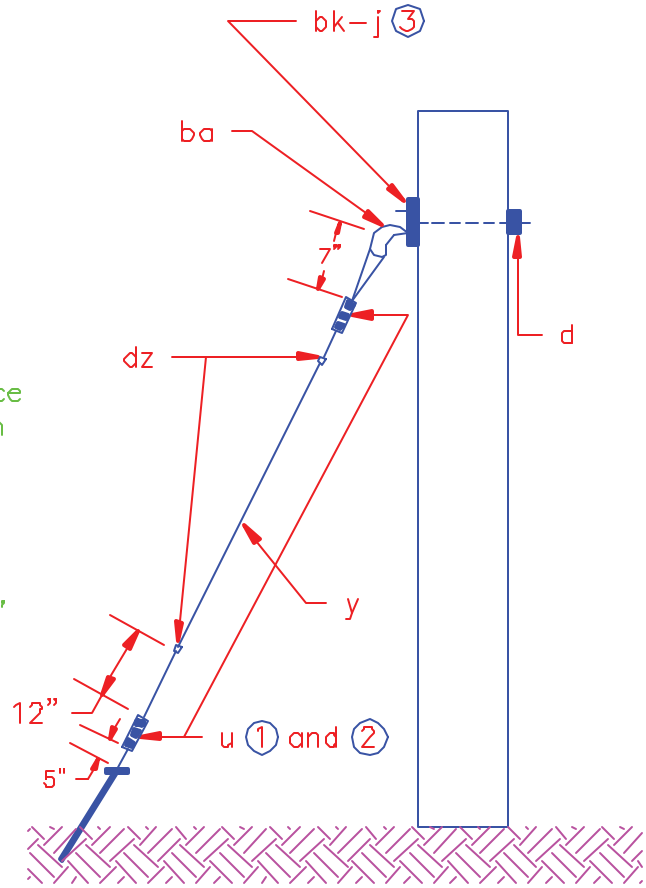

Notes:

1. An equivalent guy terminating device (mu) rated to develop the strength of the appropriate guy strand may be used in lieu of the 3–bolt guy clamps listed.

2. Where 3–bolt guy clamps are used, place 1 or 2 clamps depending on stand size.

3. For 6M sizes of guy strand, omit items bk and j and substitute a 2 1/2" x 2 1/2" x 3/16", 11/16" hole curved washer, item d.

4. If a guy hook is used in lieu of a thimbleye bolt refer to Guide Drawing 812 for installation details.

5. For converting English units to metric units use 1 in. = 25.4 mm and 1 ft = 0.3048 m.

		PE1–2	PE1–3	PE1–4
		6M	10M	16M
ITEMS	MATERIALS	NO. REQ'D	NO. REQ'D	NO. REQ'D
d	Washers, curved, 3" x 3" x 1/4", 13/16" hole	–	–	1
d	Washers, curved, 2 1/2" x 2 1/2" x 3/16", 11/16" hole	2	1	–
j	Screws, lag, 1/2" x 4"	–	2	2
u	Clamps, guy, 3–bolt	2	2	4
y	Strand, guy	req'd lgth	req'd lgth	req'd lgth
ba	Bolts, angle, thimbleye, 3/4" x req'd length	–	–	1
ba	Bolts, angle, thimbleye, 5/8" x req'd length	1	1	–
bk	Plates, lift, curved, 7" x 2 1/2" x 5/16"	–	–	1
bk	Plates, lift, curved, 7" x 2 1/2" x 1/4"	–	1	–
*dz	Clips, guy	2	2	2

RURAL TELECOMMUNICATIONS CONSTRUCTION PRACTICES
DOWN GUY

Scale: NTS | March 2001

PE1–2, –3, –4

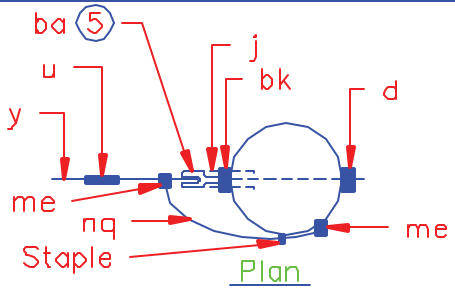

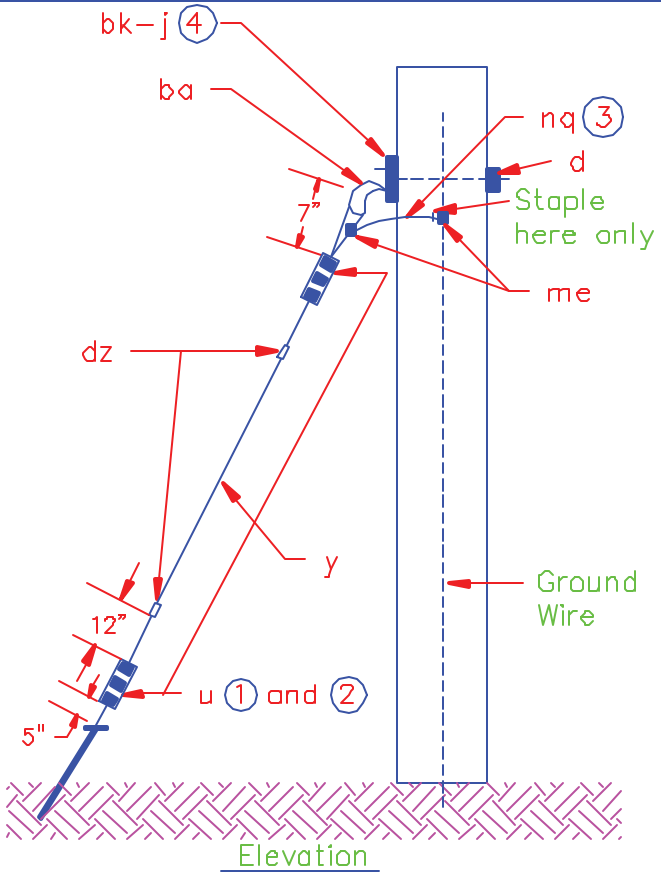

Notes:

1. An equivalent guy terminating device (mu) rated to develop the strength of the appropriate guy strand may be used in lieu of the 3–bolt guy clamps listed.
2. Where 3–bolt guy clamps are used, place 1 or 2 clamps depending on strand size.
3. On joint use poles where no vertical pole ground wire is present, leave enough length of #6 AWG copper ground wire (item nq) coiled and taped to enable it to be extended up the pole and connected to a multigrounded neutral by a representative of the power company.
4. For 6M sizes of guy strand, omit items bk and j and substitute a 2 1/2" x 2 1/2" x 3/16", 11/16" hole curved washer, item d.
5. If a guy hook is used in lieu of a thimbleye bolt refer to Guide Drawing 812 for installation details.
6. For converting English units to metric units use 1 in. = 25.4 mm and 1 ft = 0.3048 m.

		PE1–2G	PE1–3G	PE1–4G
		6M	10M	16M
ITEMS	MATERIALS	NO. REQ'D	NO. REQ'D	NO. REQ'D
d	Washers, curved, 3" x 3" x 1/4", 13/16" hole	–	–	1
d	Washers, curved, 2 1/2" x 2 1/2" x 3/16", 11/16" hole	2	1	–
j	Screws, lag, 1/2" x 4"	–	2	2
u	Clamps, guy, 3–bolt	2	2	4
y	Strand, guy	req'd lgth	req'd lgth	req'd lgth
ba	Bolts, angle, thimbleye, 3/4" x req'd length	–	–	1
ba	Bolts, angle, thimbleye, 5/8" x req'd length	1	1	–
bk	Plates, lift, curved, 7" x 2 1/2" x 5/16"	–	–	1
bk	Plates, lift, curved, 7" x 2 1/2" x 1/4"	–	1	–
*dz	Clips, guy	2	2	2
me	Connector, grounding	2	2	2
*nq	Wire, ground, bare #6 AWG copper	req'd lgth	req'd lgth	req'd lgth

RURAL TELECOMMUNICATIONS CONSTRUCTION PRACTICES
DOWN GUY, GROUND CONNECTIONS

Scale: NTS | March 2001

PE1–2G, –3G, –4G

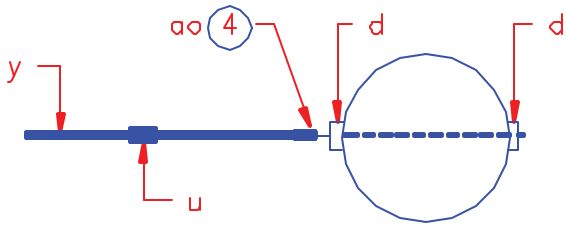

Plan of Pole "A"

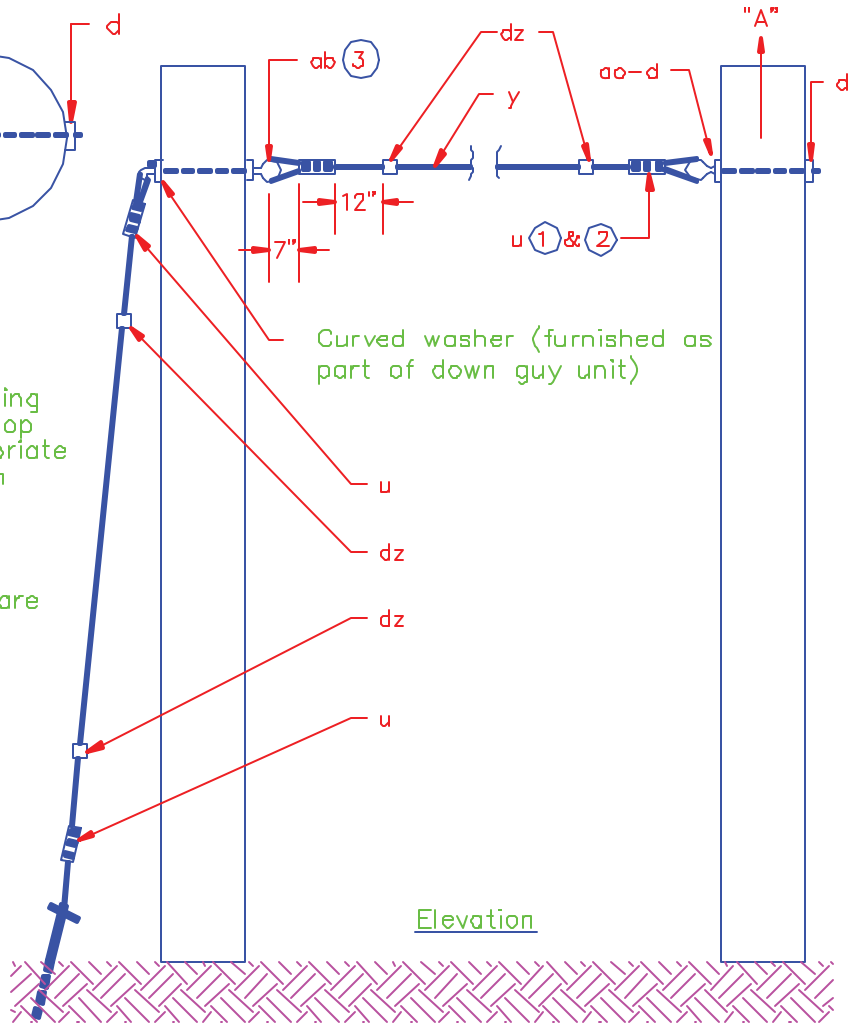

Elevation

Notes:

1. An equivalent guy terminating device (mu) rated to develop the strength of the appropriate guy strand may be used in lieu of 3-bolt guy clamps listed.

2. Where 3-bolt guy clamps are used, place 1 or 2 clamps depending on strand size.

3. Size of thimbleye nut is governed by size of thimbleye bolt used for down guy.

4. If a guy hook is used in lieu of a thimbleye bolt refer to Guide Drawing 812 for installation details.

5. For converting English units to metric units use 1 in. = 25.4 mm and 1 ft = 0.3048 m.

		PE2-2	PE2-3	PE2-4
		6M	10M	16M
ITEMS	MATERIALS	NO. REQ'D	NO. REQ'D	NO. REQ'D
ab	Nuts, thimbleye	1	1	1
ao	Bolts, thimbleye, 3/4" x req'd lgth.	–	–	1
ao	Bolts, thimbleye, 5/8" x req'd lgth.	1	1	–
d	Washers, curved, 3" x 3" x 1/4", 13/16" hole	–	–	2
d	Washers, curved, 2 1/2" x 2 1/2" x 3/16", 11/16" hole	2	2	–
*dz	Clips, guy	2	2	2
u	Clamps, guy, 3-bolt	2	2	4
y	Strand, guy	req'd lgth	req'd lgth	req'd lgth

RURAL TELECOMMUNICATIONS CONSTRUCTION PRACTICES
OVERHEAD GUY

Scale: NTS | March 2001

PE2-2, -3, -4

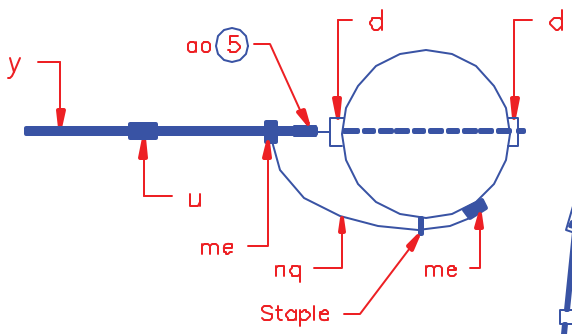

Plan of Pole "A"

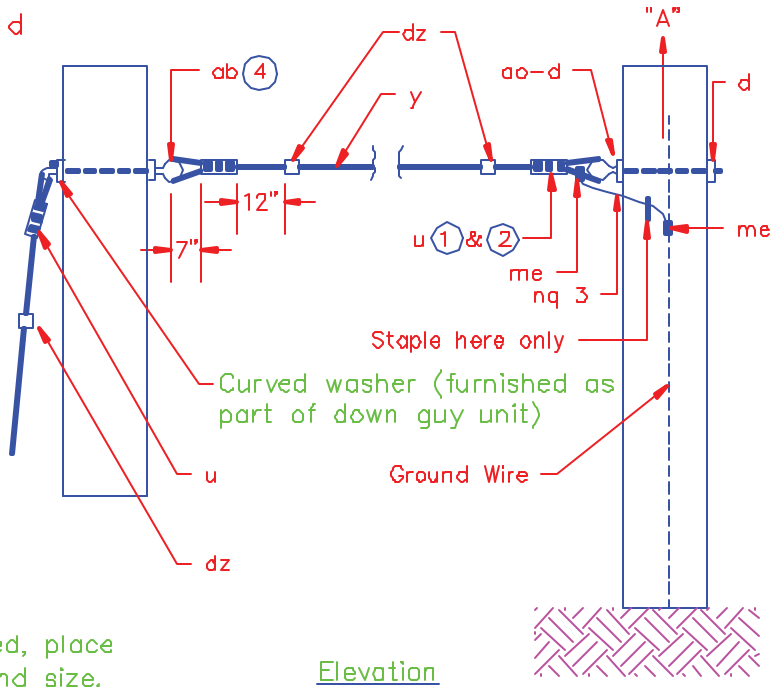

Elevation

Notes:

1. An equivalent guy terminating device (mu) rated to develop the strength of the appropriate guy strand may be used in lieu of 3-bolt guy clamps listed.

2. Where 3-bolt guy clamps are used, place 1 or 2 clamps depending on strand size.

3. On joint use poles where no vertical pole ground wire is present, leave enough length of #6 AWG copper ground wire (Item nq) coiled and taped to enable it to be extended up the pole and connected to a multigrounded neutral by a representative of the power company.

4. Size of thimbleye nut is governed by size of thimbleye bolt used for down guy.

5. If a guy hook is used in lieu of a thimbleye bolt refer to Guide Drawing 812 for installation details.

6. For converting English units to metric units use 1 in. = 25.4 mm and 1 ft = 0.3048 m.

		PE2-2G	PE2-3G	PE2-4G
		6M	10M	16M
ITEMS	MATERIALS	NO. REQ'D	NO. REQ'D	NO. REQ'D
ab	Nuts, thimbleye	1	1	1
ao	Bolts, thimbleye, 3/4" x req'd lgth.	–	–	1
ao	Bolts, thimbleye, 5/8" x req'd lgth.	1	1	–
d	Washers, curved, 3" x 3" x 1/4", 13/16" hole	–	–	2
d	Washers, curved, 2 1/2" x 2 1/2" x 3/16", 11/16" hole	2	2	–
*dz	Clips, guy	2	2	2
u	Clamps, guy, 3-bolt	2	2	4
y	Strand, guy	req'd lgth	req'd lgth	req'd lgth
me	Connectors, grounding	2	2	2
*nq	Wires, ground, bare #6 AWG copper	req'd lgth	req'd lgth	req'd lgth

RURAL TELECOMMUNICATIONS CONSTRUCTION PRACTICES
OVERHEAD GUY, GROUND CONNECTIONS

Scale: NTS | March 2001

PE2-2G, -3G, -4G

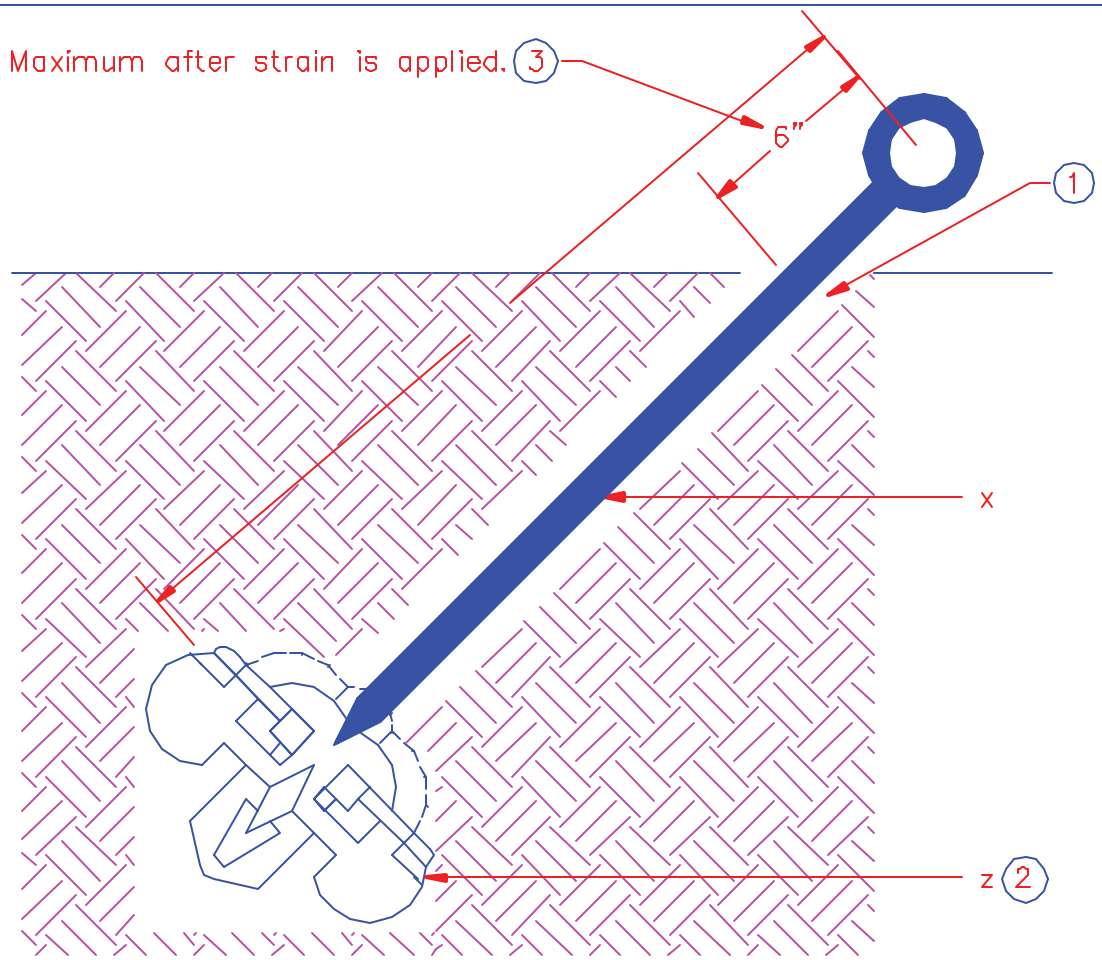

Notes:

1. Size of hole shall be governed by the diameter of the unexpanded anchor.
2. Expand the blades into undisturbed earth.
3. Eye of anchor rod shall not be below surface of ground.
4. For converting English units to metric units use 1 in. = 25.4 mm, 1 ft = 0.3048 m, and 1 lbf = 4.448 N.

		PF1-3	PF1-5	PF1-7
		6,000 lbf Holding Power	10,000 lbf Holding Power	16,000 lbf Holding Power
ITEMS	MATERIALS	NO. REQ'D	NO. REQ'D	NO. REQ'D
x	Rod, anchor, thimbleye type, 5/8" x 7'0"	1	–	–
x	Rod, anchor, thimbleye type, 3/4" x 8'0"	–	1	–
x	Rod, anchor, thimbleye type, 1" x 10'0"	–	–	1
z	Anchor, expanding	1	1	1

RURAL TELECOMMUNICATIONS CONSTRUCTION PRACTICES
EXPANDING ANCHOR ASSEMBLY

Scale: NTS | March 2001

PF1-3, -5, -7

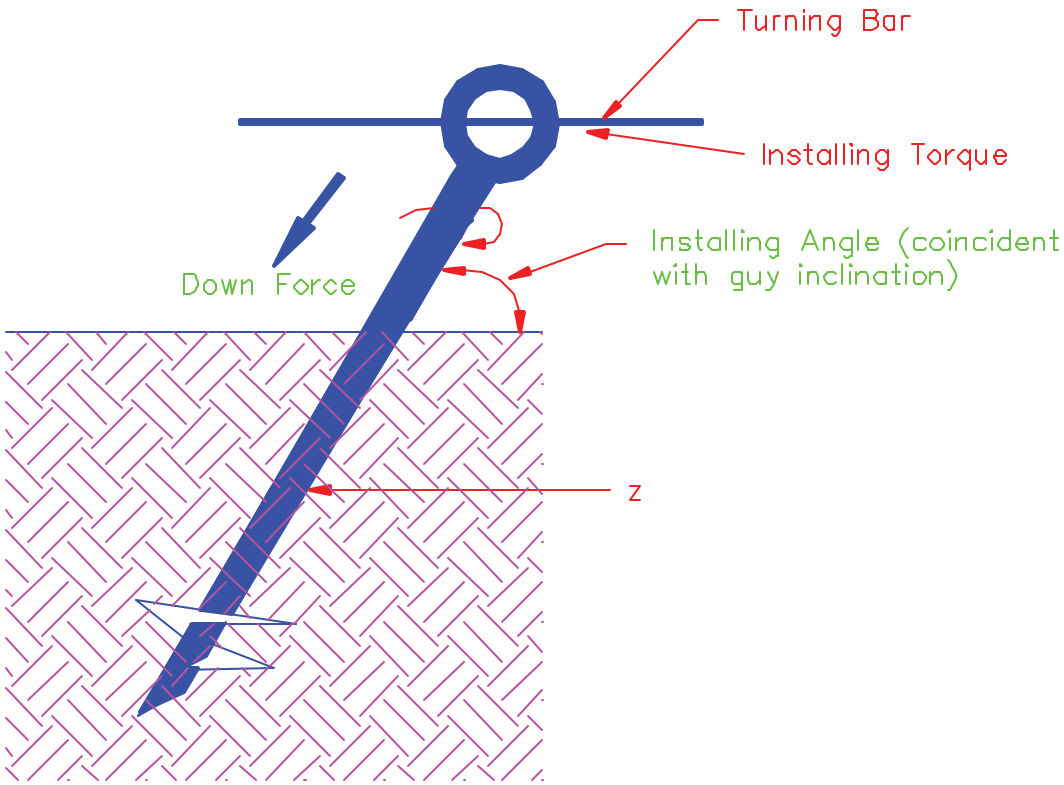

Note:

For converting English units to metric units use 1 in. = 25.4 mm and 1 lbf = 4.448 N.

		PF3–3	PF3–5	PF3–7
		6,000 lbf Holding Power	10,000 lbf Holding Power	16,000 lbf Holding Power
ITEMS	MATERIALS	NO. REQ'D	NO. REQ'D	NO. REQ'D
z	Anchor, screw – 8" (203 mm) helix dia.	1	–	–
z	Anchor, screw – 10" (254 mm) helix dia.	–	1	–
z	Anchor, screw – 12" (305 mm) helix dia.	–	–	1

RURAL TELECOMMUNICATIONS CONSTRUCTION PRACTICES
SCREW ANCHOR ASSEMBLY

Scale: NTS	March 2001
	PF3–3, –5, –7

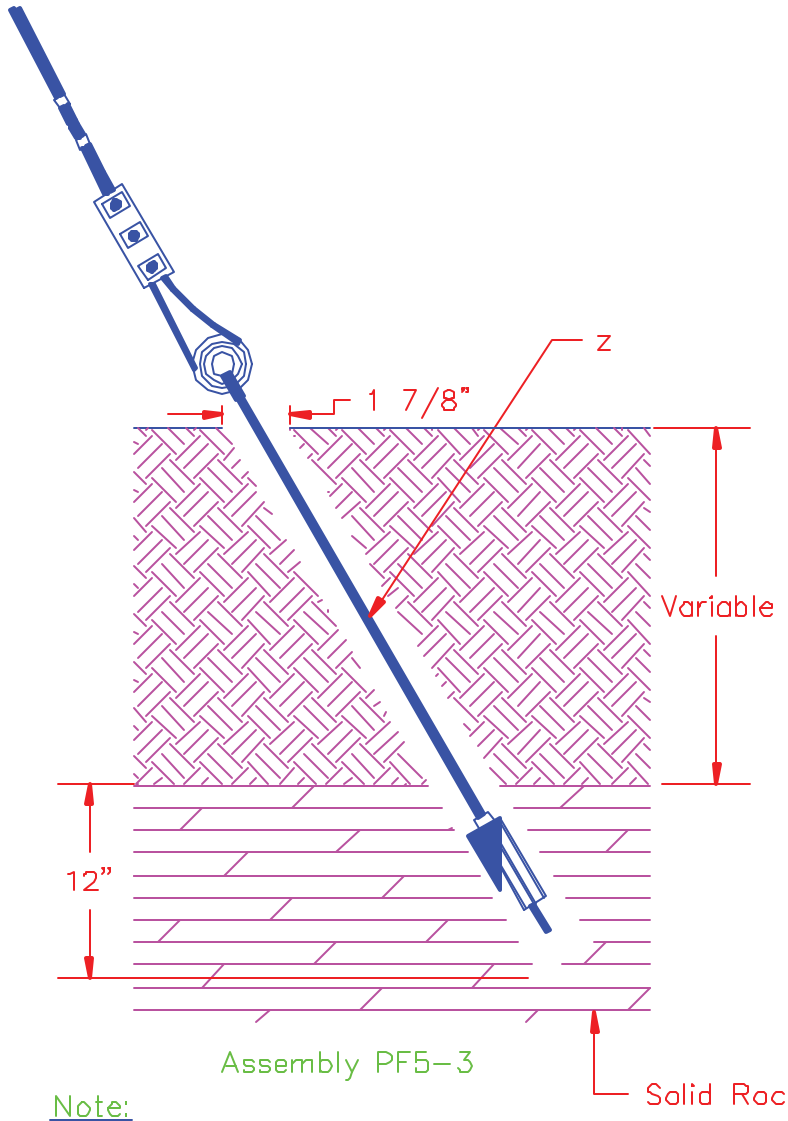

Assembly PF5-3

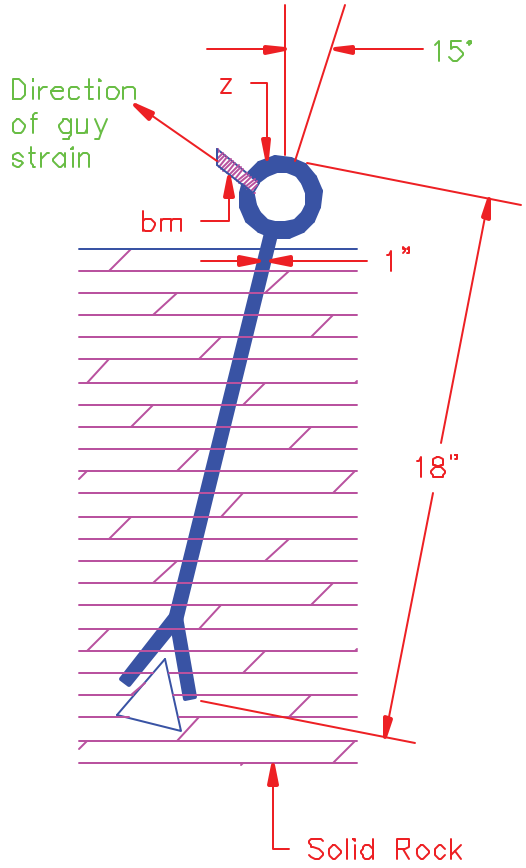

Assembly PF5-4

Note:

For converting English units to metric units use 1 in. = 25.4 mm and 1 lbf = 4.448 N.

		PF5-3	PF5-4
		16,000 lbf Holding Power	12,000 lbf Holding Power
ITEMS	MATERIALS	NO. REQ'D	NO. REQ'D
z	Anchor, rock, expanding	1	—
z	Anchor, rock, split wedge type	—	1
*bm	Thimble, guy	—	1

RURAL TELECOMMUNICATIONS CONSTRUCTION PRACTICES
ROCK ANCHOR ASSEMBLY

Scale: NTS		March 2001
		PF5-3, -4

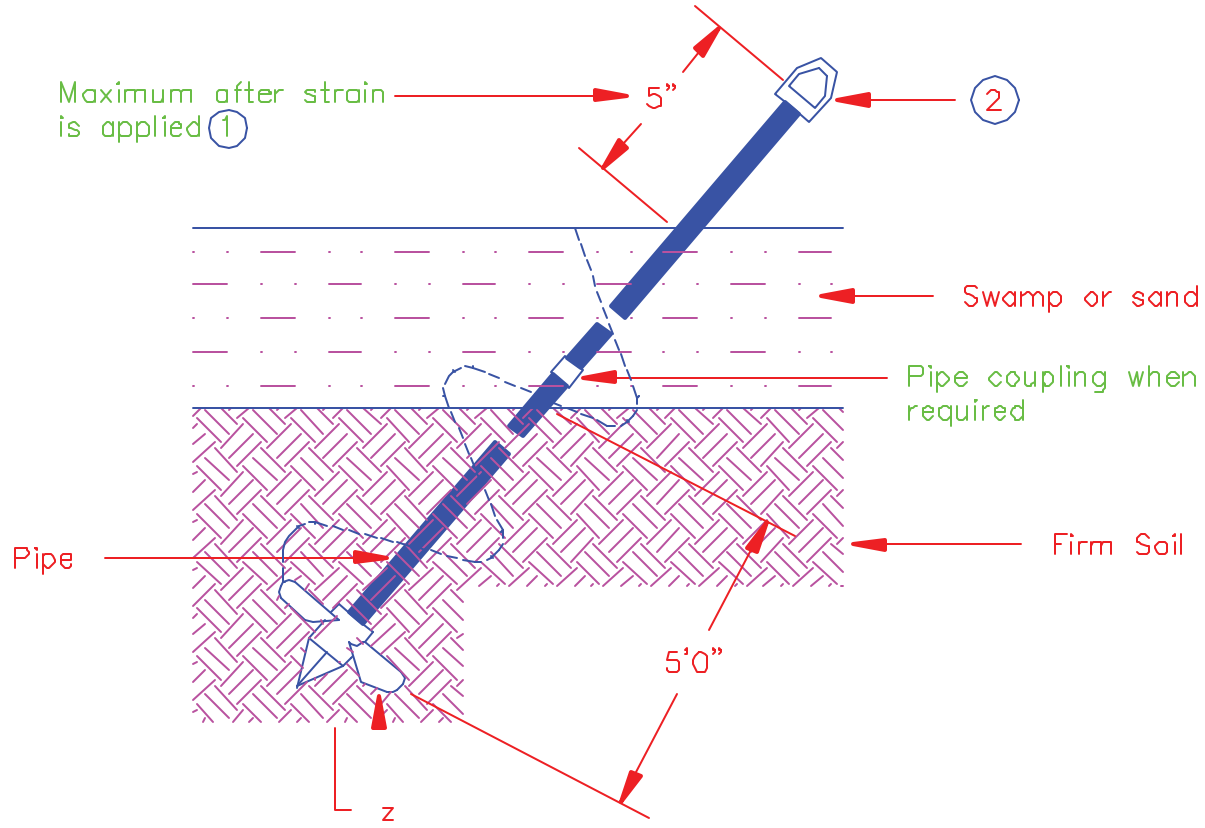

Notes:

1. Eye of anchor rod shall not be below surface of ground.
2. Anchor nut is furnished with anchor by manufacturer.
3. For converting English units to metric units use 1 in. = 25.4 mm, 1 ft = 0.3048 m, and 1 lbf = 4.448 N.

		PF6–3	PF6–4	PF6–5
		6,000 lbf Holding Power	8,000 lbf Holding Power	10,000 lbf Holding Power
ITEMS	MATERIALS	NO. REQUIRED	NO. REQUIRED	NO. REQUIRED
z	Anchor, swamp, 10"	1	–	–
z	Anchor, swamp, 12"	–	1	–
z	Anchor, swamp, 15"	–	–	1
–	Pipe, galvanized, 1 1/2", dia.	length as req'd	–	–
–	Pipe, galvanized, 2" dia.	–	length as req'd	length as req'd

RURAL TELECOMMUNICATIONS CONSTRUCTION PRACTICES
SWAMP ANCHOR ASSEMBLY

Scale: NTS	March 2001
	PF6–3, –4, –5

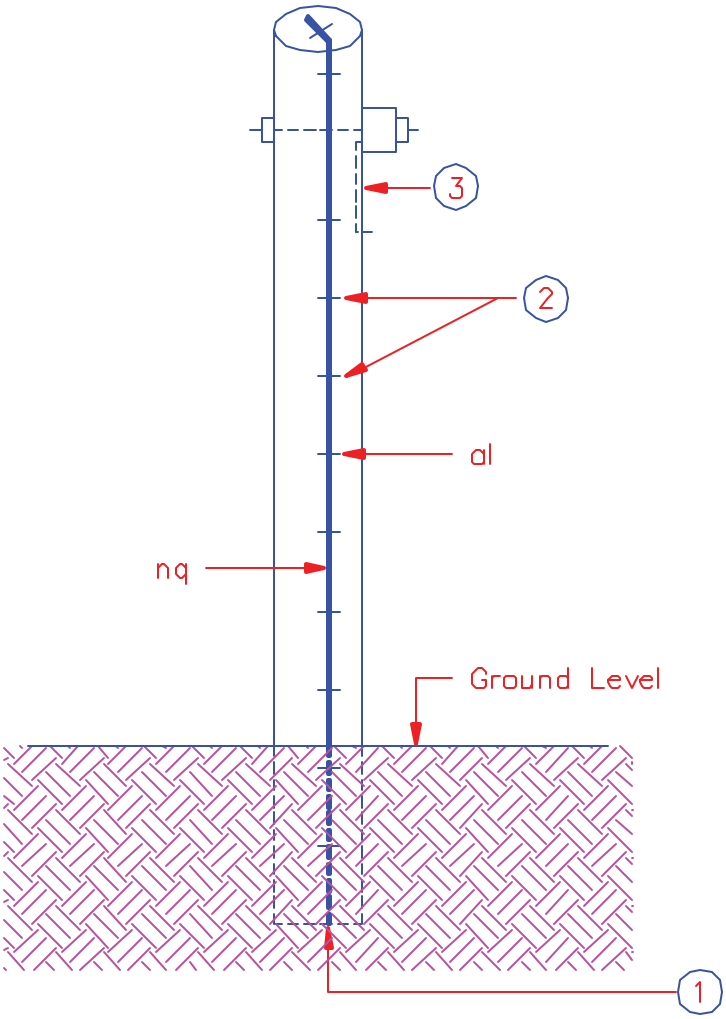

Notes:

1. Leave a sufficient length of wire at the bottom of the pole to form a "butt" ground.

2. Staples on ground wire should be about 18 in. (457 mm) apart.

3. Ground wire should clear all hardware by 2 in. (51 mm) minimum and be stapled to maintain this position.

ITEMS	MATERIALS	NO. REQ'D
*nq	Wire, ground, bare, #6 AWG copper	as required
*al	Staples, ground wire	as required

RURAL TELECOMMUNICATIONS CONSTRUCTION PRACTICES
POLE LIGHTNING PROTECTION ASSEMBLY

Scale: NTS	March 2001
	PM1

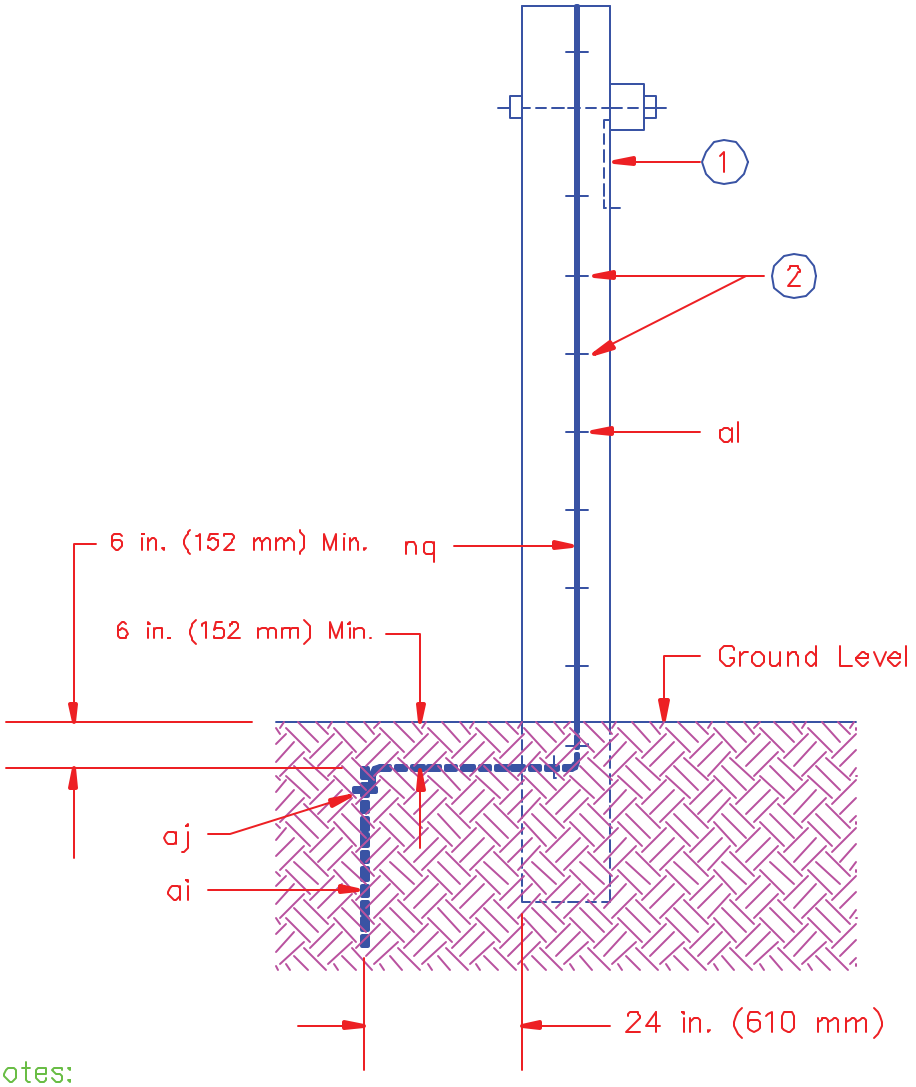

Notes:

1. Ground wire should clear all hardware by 2 in. (51 mm) minimum and be stapled to maintain this position.

2. Staples on ground wire should be about 18 in. (457 mm) apart.

ITEMS	MATERIALS	NO. REQ'D
ai	Rod, ground, 1/2 in. x 5 ft (13 mm x 1.5 m)	1
aj	Clamp, ground rod	1
*nq	Wire, ground, bare, #6 AWG copper	as required
*al	Staples, ground wire	as required

RURAL TELECOMMUNICATIONS CONSTRUCTION PRACTICES
POLE GROUND ASSEMBLY

Scale: NTS | March 2001

PM2

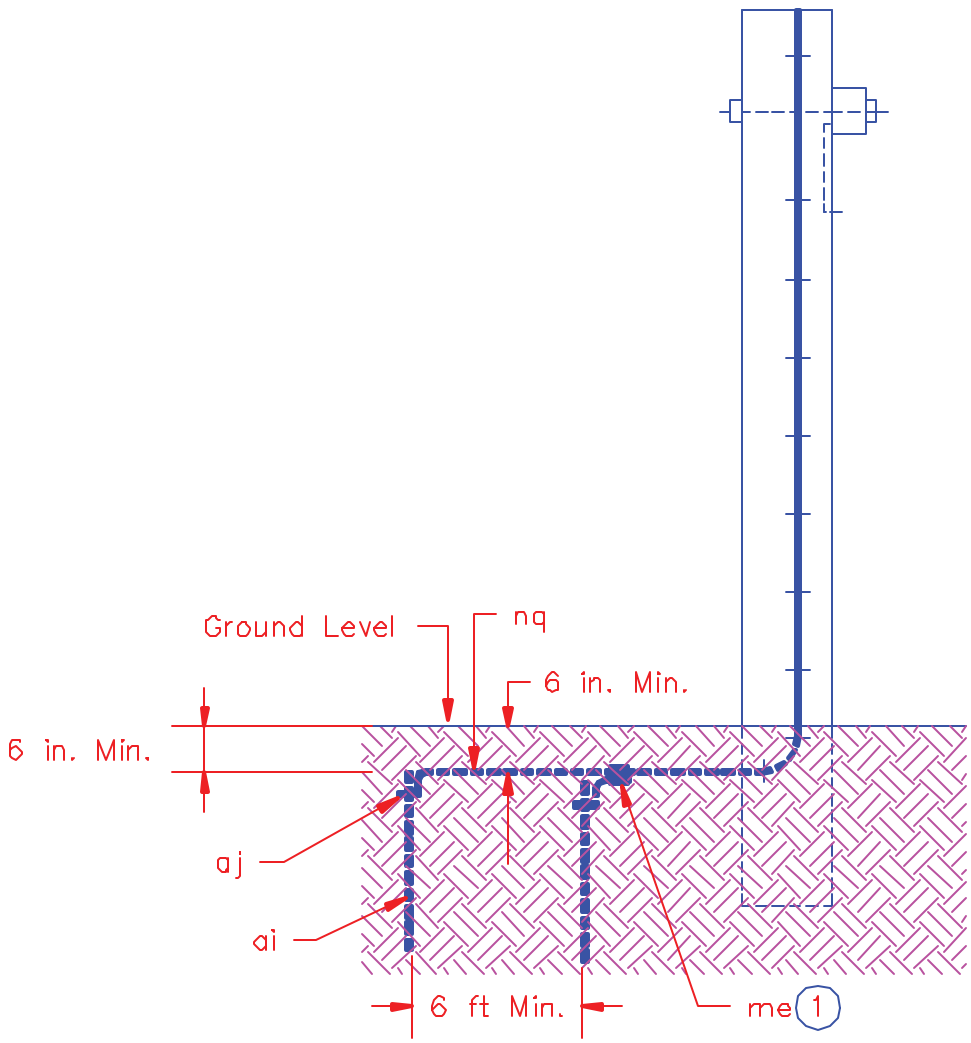

Notes:

1. Connector may be ommitted if pole ground wire is extended to last ground rod.

2. For converting English units to metric units use 1 in. = 25.4 mm and 1 ft = 0.3048 m.

ITEMS	MATERIALS	NO. REQ'D
ai	Rod, ground, 5/8 in. x 8 ft (16 mm x 2.4 m)	1
aj	Clamps, ground rod	1
*nq	Wire, ground, bare, #6 AWG copper	as required
me	Connector, grounding, compression type	1

RURAL TELECOMMUNICATIONS CONSTRUCTION PRACTICES
AUXILIARY GROUND ROD ASSEMBLY

Scale: NTS		March 2001
		PM2-1

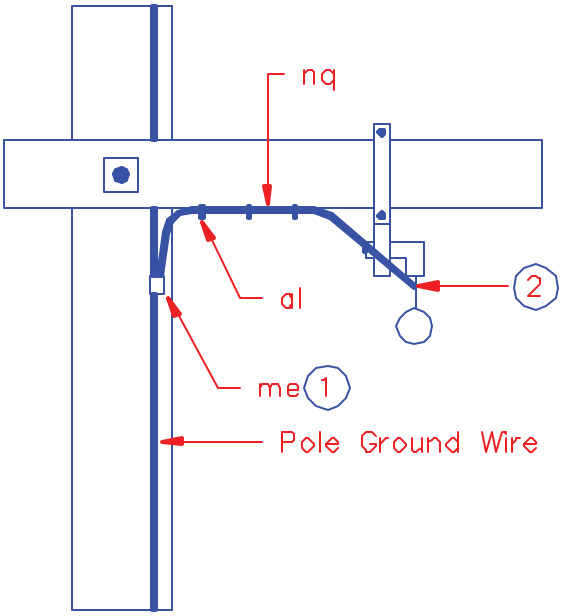

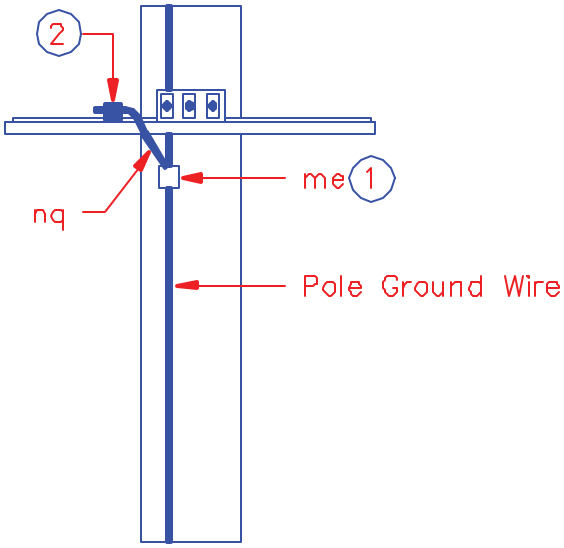

Notes:

1. Ground wire (item nq) shall be connected to the vertical pole ground wire of the multigrounded power system neutral or to the pole ground assembly (PM2 unit). If a multigrounded power system neutral is present on the pole but there is no vertical pole ground wire, a sufficient length of bare #6 AWG copper wire (item nq) shall be left coiled and taped to permit it to be extended up the pole and connected to the multigrounded neutral by a representative of the power company.

2. Carefully remove the insulation from the support wire or the strand to permit connection of the ground wire to the support wire or the strand by means of a grounding connector (item me). Where the insulation is required to be restored, refer to Guide Drawing 360 for restoration details.

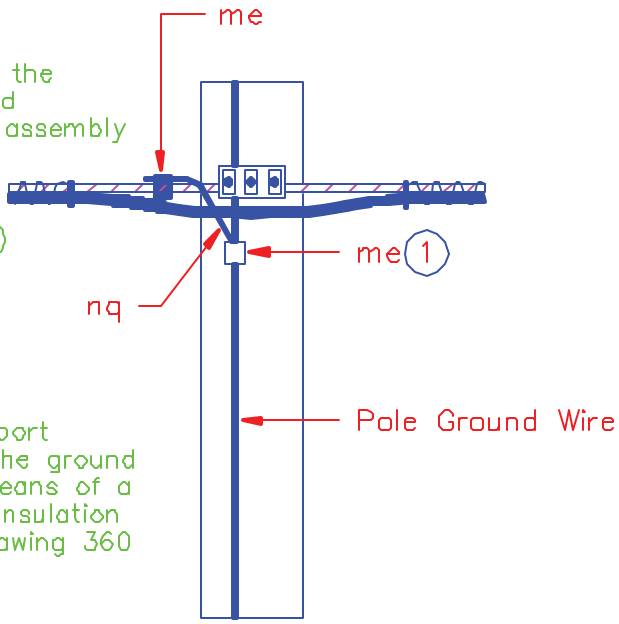

ITEMS	MATERIALS	NO. REQ'D
me	Connectors, grounding	2
*nq	Wire, ground, bare, #6 AWG copper	as required
*al	Staples, ground wire	as required

RURAL TELECOMMUNICATIONS CONSTRUCTION PRACTICES
GROUND WIRE ASSEMBLY

Scale: NTS | March 2001

PM2A

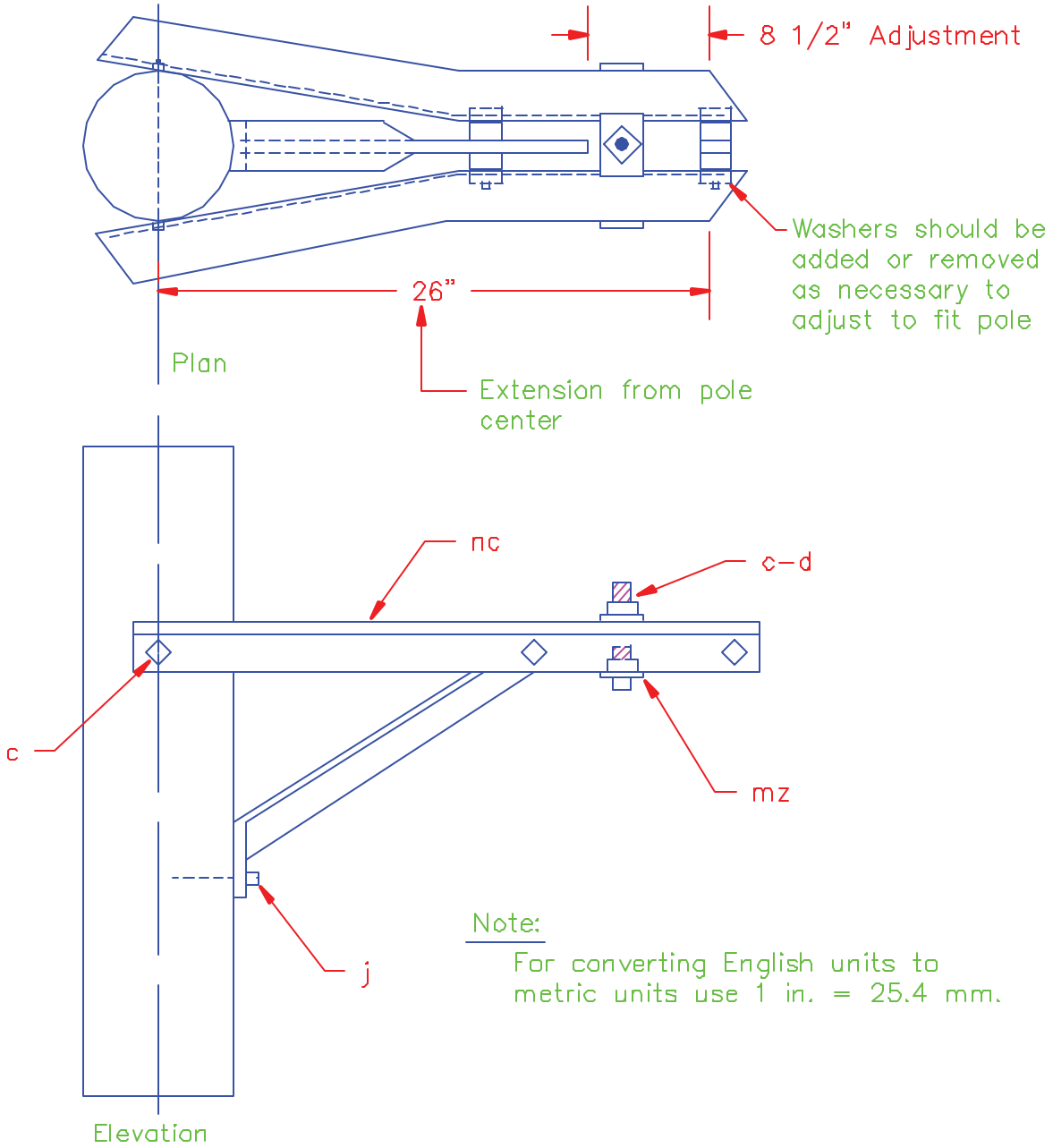

Note:
For converting English units to metric units use 1 in. = 25.4 mm.

ITEMS	MATERIALS	NO. REQ'D
*nc	Cable, extension arms, short	1
c	Bolts, machine, 5/8" x required length	2
mz	Clamps, cable, suspension	1
j	Screws, lag, 1/2" x 4"	1
d	Washers, flat, 2 1/4" x 2 1/4", 11/16" hole	1

RURAL TELECOMMUNICATIONS CONSTRUCTION PRACTICES
CABLE EXTENSION ARM ASSEMBLY (SHORT)

Scale: NTS | March 2001

PM4

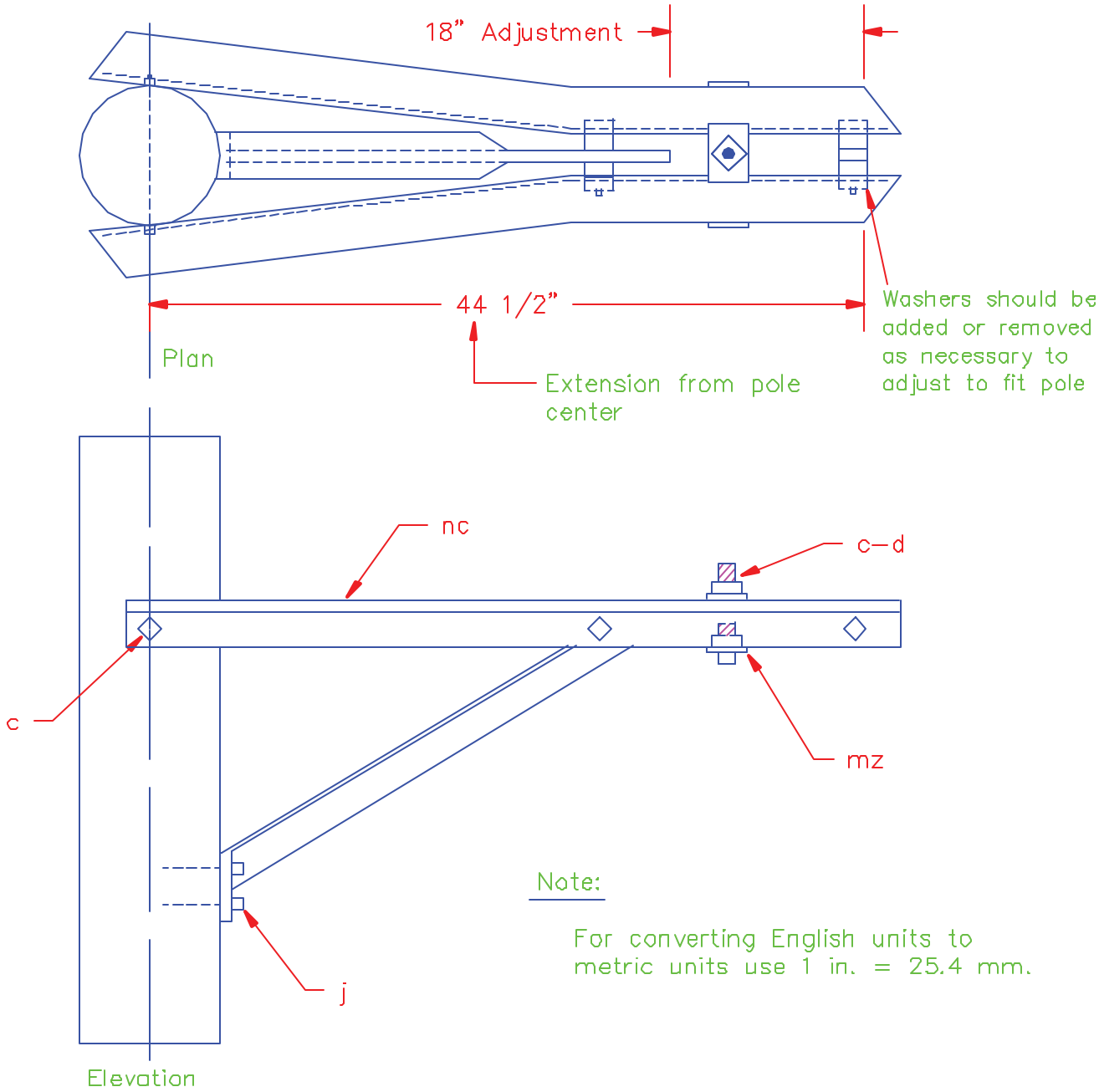

Note:

For converting English units to metric units use 1 in. = 25.4 mm.

ITEMS	MATERIALS	NO. REQ'D
*nc	Cable, extension arms, long	1
c	Bolts, machine, 5/8" x required length	2
mz	Clamps, cable, suspension	1
j	Screws, lag, 1/2" x 4"	2
d	Washers, flat, 2 1/4" x 2 1/4", 11/16" hole	1

RURAL TELECOMMUNICATIONS CONSTRUCTION PRACTICES
CABLE EXTENSION ARM ASSEMBLY (LONG)

Scale: NTS	March 2001
	PM4A

Pole Illustrated is 25 ft Pole Set 5 ft in soil with the Point of Attachment 13 in. from the Top of the Pole.

Notes:

1. Not more than 36 in. and not less than 18 in.
2. Place step 1/2 the distance between steps in Note 1.
3. The first pole plate below the 8 ft set of steps is to be placed on the same side of the pole as the first step above the 8 ft set.
4. When double steps occur at a point where the pole is less than 8 in. in diameter, place one of the steps about 1 in. below the opposite step.
5. Steps should be located in line with the lead unless otherwise specified by the Engineer.
6. 3/8 in. lead holes about 2 in. deep shall be bored in all species of poles to accomodate the lag screws used in mounting detachable step plates.
7. For converting English units to metric units use 1 in. = 25.4 mm and 1 ft = 0.3048 m.

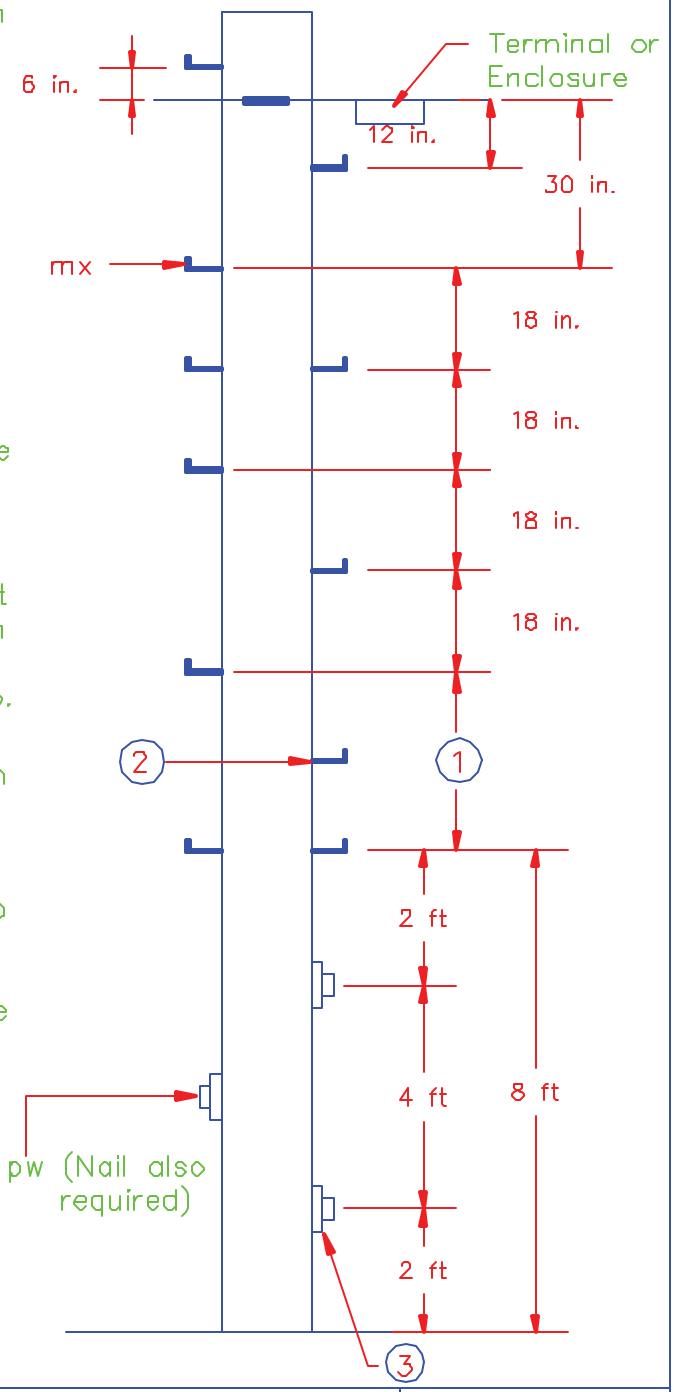

ITEMS	MATERIALS	NO. REQ'D
*mx	Steps, steel pole, 5/8 in. x 10 in.	as required
*pw	Steps, detachable pole (pole plate and lag screw only)	3
–	Nails, #20d galvanized	2

RURAL TELECOMMUNICATIONS CONSTRUCTION PRACTICES
POLE STEPPING ASSEMBLY

Scale: NTS	March 2001
	PM5

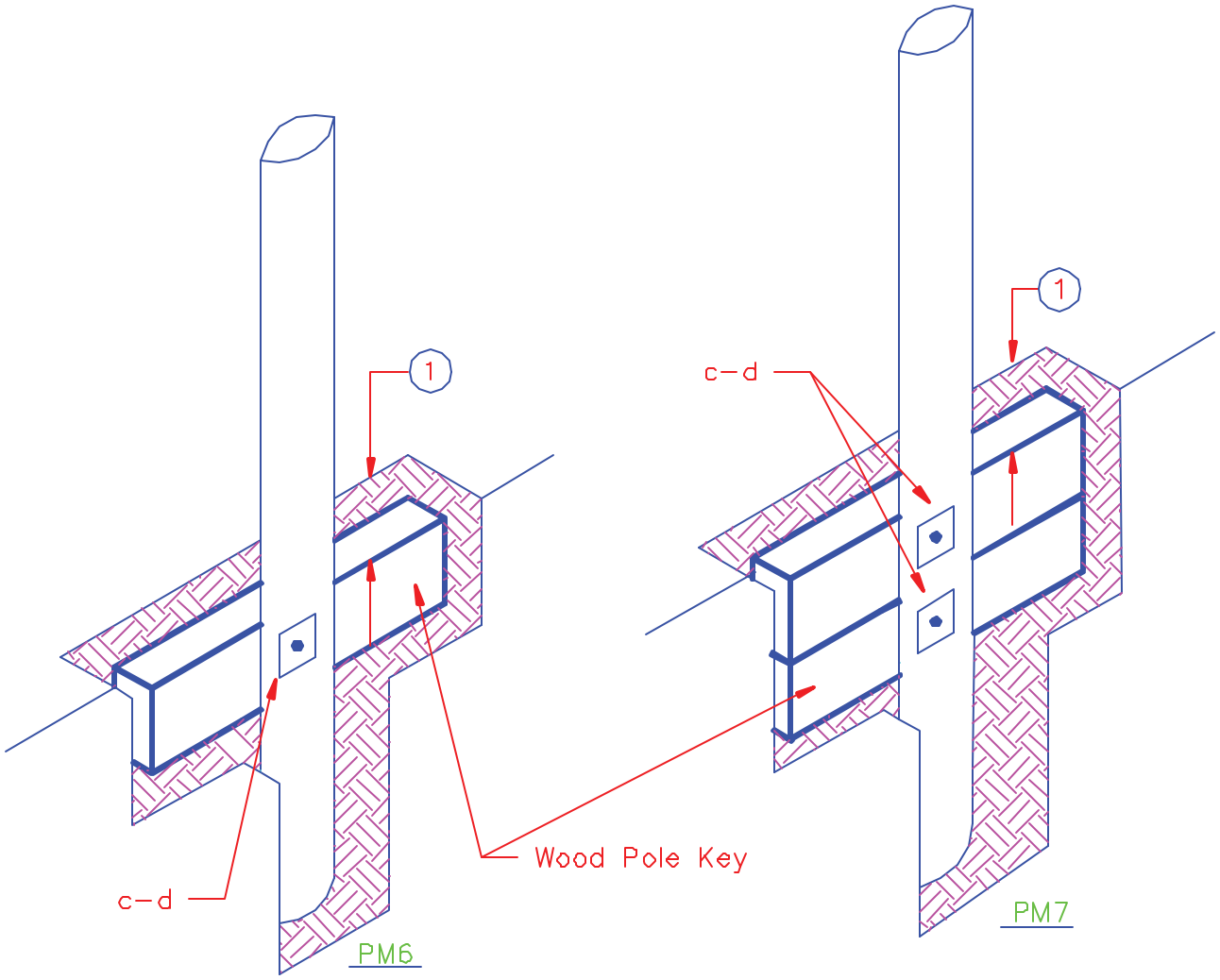

Notes:

1. Wood pole key should be placed 6 in. below the level of the ground.
2. For converting English units to metric units use 1 in. = 25.4 mm and 1 ft = 0.3048 m.

		PM6	PM7
ITEMS	MATERIALS	NO. REQ'D	NO. REQ'D
c	Bolts, machine, 5/8" x required length	1	2
d	Washers, 2 1/4" x 2 1/4" x 3/16", 11/16" hole	2	4
–	Key, pole, wood, treated, 3" x 12" x 3' 0"	1	2

RURAL TELECOMMUNICATIONS CONSTRUCTION PRACTICES
POLE KEY ASSEMBLIES

Scale: NTS

March 2001

PM6, PM7

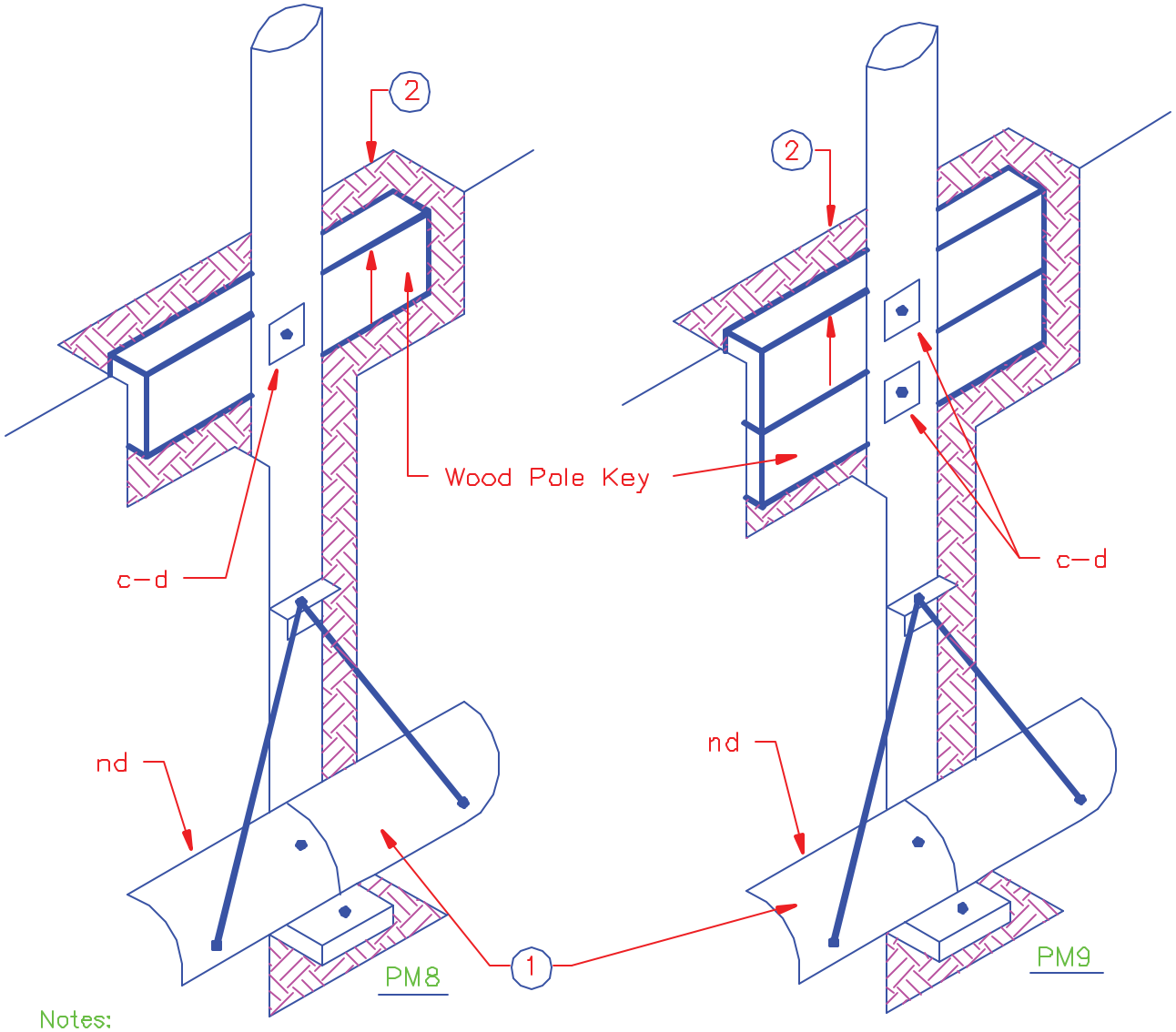

Notes:

1. Metal pole key shown in expanded position.
2. Wood pole key should be placed 6 in. below the level of the ground.
3. For converting English units to metric units use 1 in. = 25.4 mm and 1 ft = 0.3048 m.

		PM8	PM9
ITEMS	MATERIALS	NO. REQ'D	NO. REQ'D
c	Bolts, machine, 5/8" x required length	1	2
d	Washers, 2 1/4" x 2 1/4" x 3/16", 11/16" hole	2	4
–	Key, pole, wood, treated, 3" x 12" x 3' 0"	1	2
*nd	Key, pole, metal	1	1

RURAL TELECOMMUNICATIONS CONSTRUCTION PRACTICES
POLE KEY ASSEMBLIES

Scale: NTS | March 2001

PM8, PM9

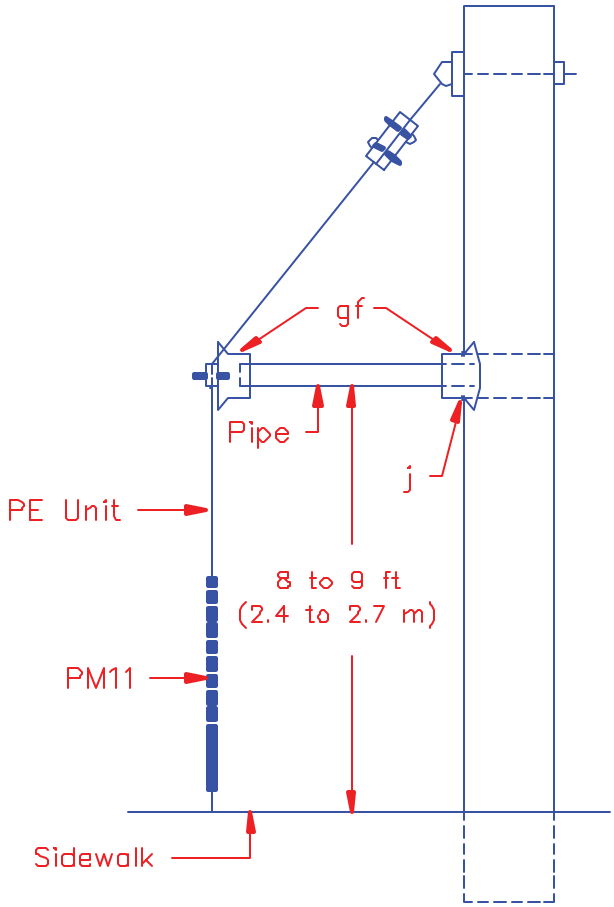

Note:

Where two guys are specified, the points of attachment of the two guy strands to the pole shall be separated by a minimum distance of 12 in. (305 mm) and the cable support clamp shall be placed on the thimbleye bolt for the lower guy.

ITEMS	MATERIALS	NO. REQ'D
*gf	Fittings, sidewalk guy arm	2
j	Screws, lag, 1/2 in. x 3 in. (13 mm x 76 mm)	as required
–	Pipe, galvanized steel, 2 in. (51 mm) ID, unthreaded, length as specified	1

RURAL TELECOMMUNICATIONS CONSTRUCTION PRACTICES
SIDEWALK GUY ARM ASSEMBLY

Scale: NTS | March 2001

PM12

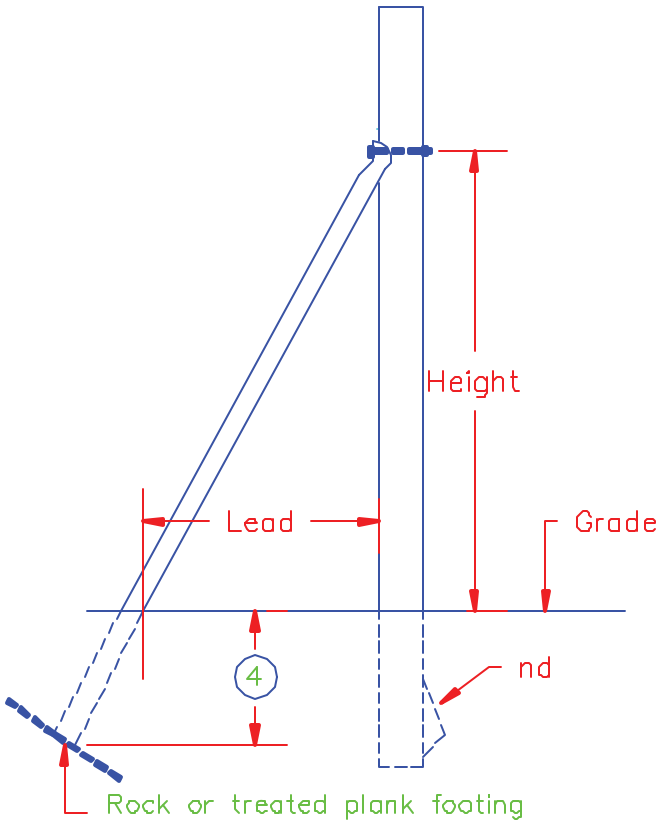

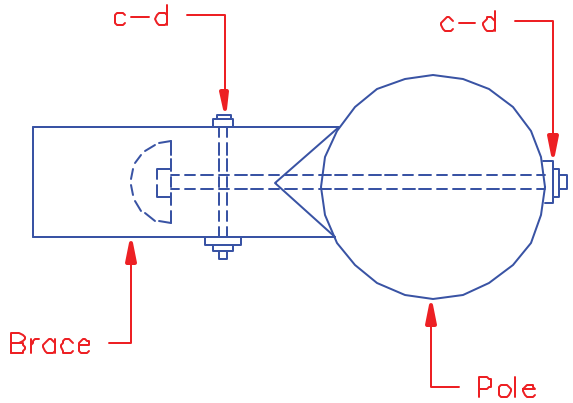

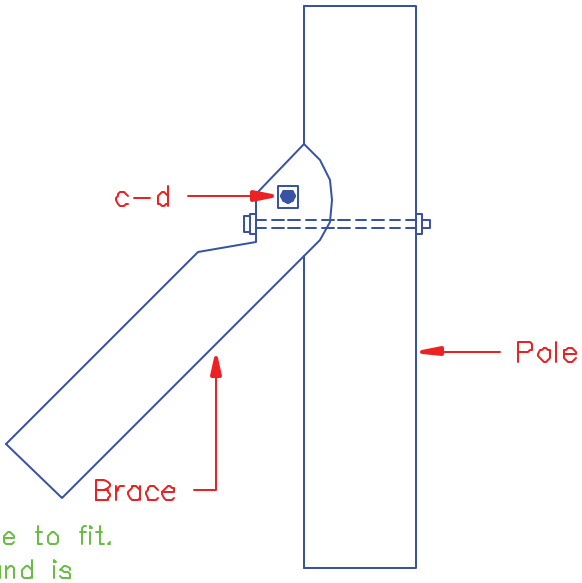

Notes:

1. Do not cut pole. Notch and frame brace to fit. Brace shall be of same class as pole and is considered to be a pole unit.
2. Lead to height ratio not to be less than 1/3.
3. A prefabricated metal push brace bracket, item gb, installed in accordance with the manufacturer's recommendations may be used in lieu of the method shown.
4. Depth to be determined by Engineer.
5. For converting English units to metric units use 1 in. = 25.4 mm and 1 ft = 0.3048 m.

ITEMS	MATERIALS	NO. REQ'D
c	Bolts, machine, 5/8" x required length	2
d	Washers, 2 1/4" x 2 1/4" x 3/16", 11/16" hole	4
*nd	Key, metal, pole	1
–	Plank, treated, 3" x 12" x 3' 0"	1
*gb	Bracket, push brace	See note 3.

RURAL TELECOMMUNICATIONS CONSTRUCTION PRACTICES
PUSH BRACE ACCESSORIES

Scale: NTS	March 2001
	PM14

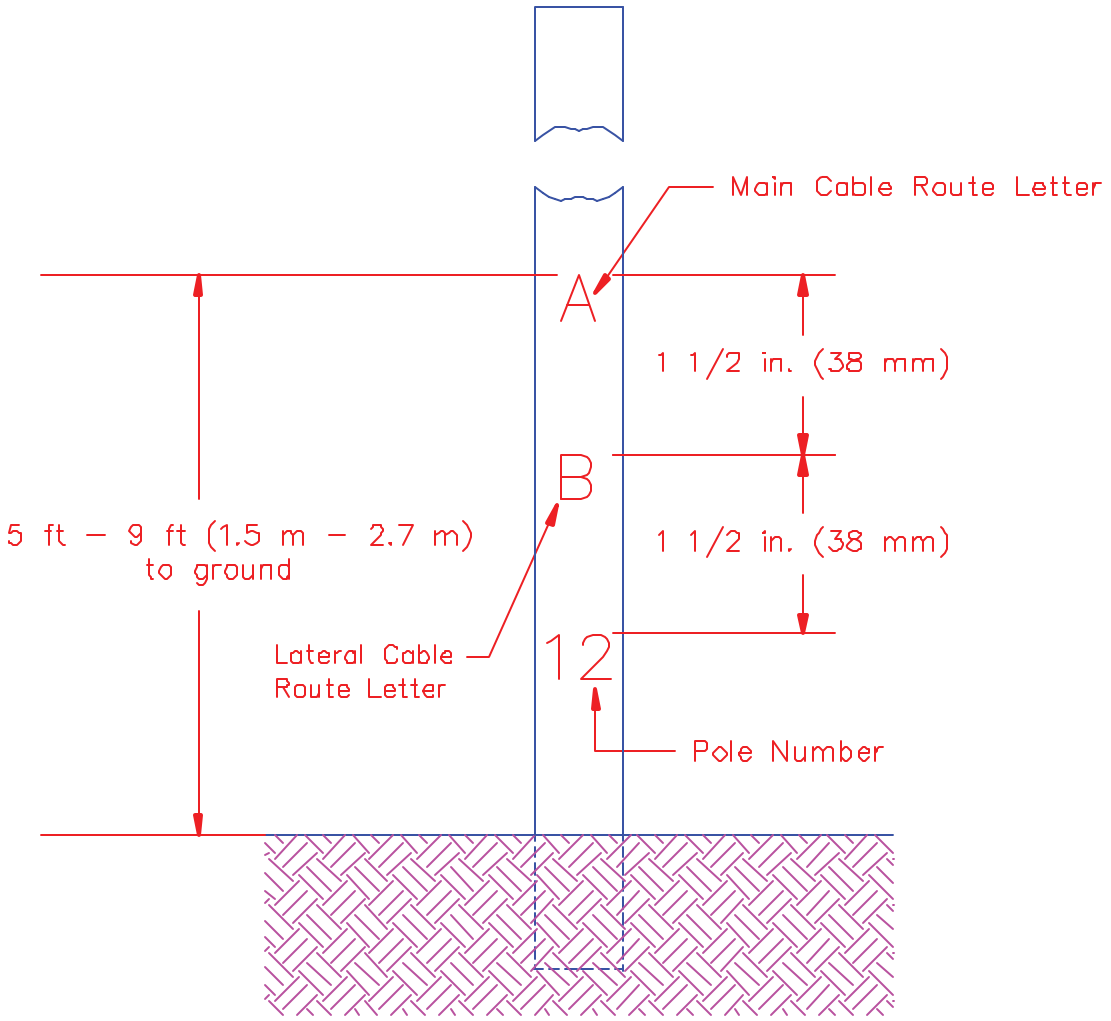

Notes:

1. All numbers and letters shall be installed so that they will face the road.
2. Where other pole numbering schemes are used, the Engineer shall revise the above labeling.

ITEM	MATERIAL	NO. REQ'D
az	Numbers, pole, 1 1/2 in. (38 mm) high	as required

RURAL TELECOMMUNICATIONS CONSTRUCTION PRACTICES
POLE MARKING

Scale: NTS

March 2001

PM52

6M Assembly

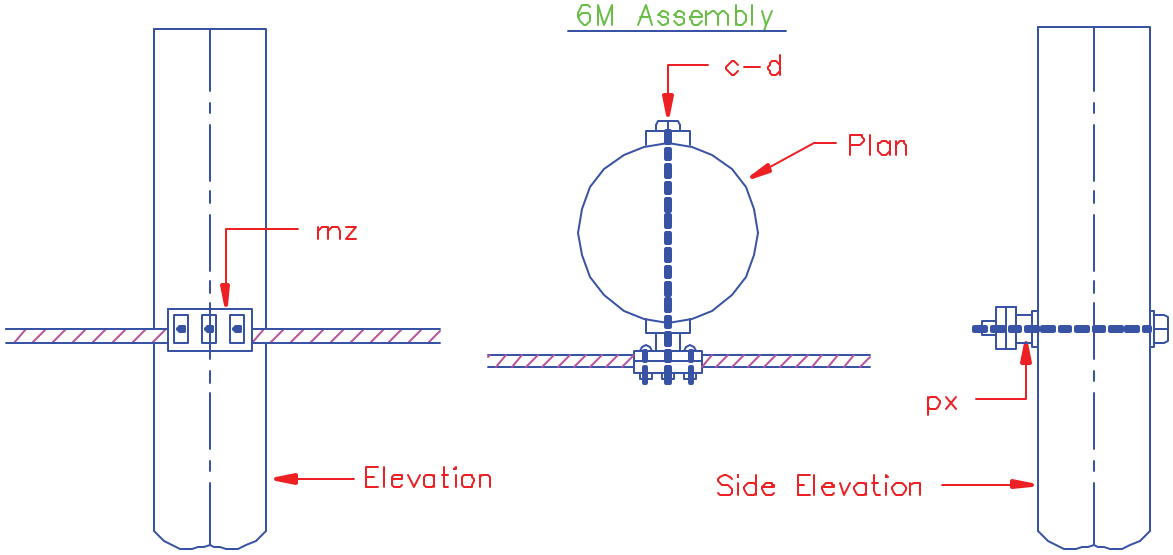

10M and 16M Assembly

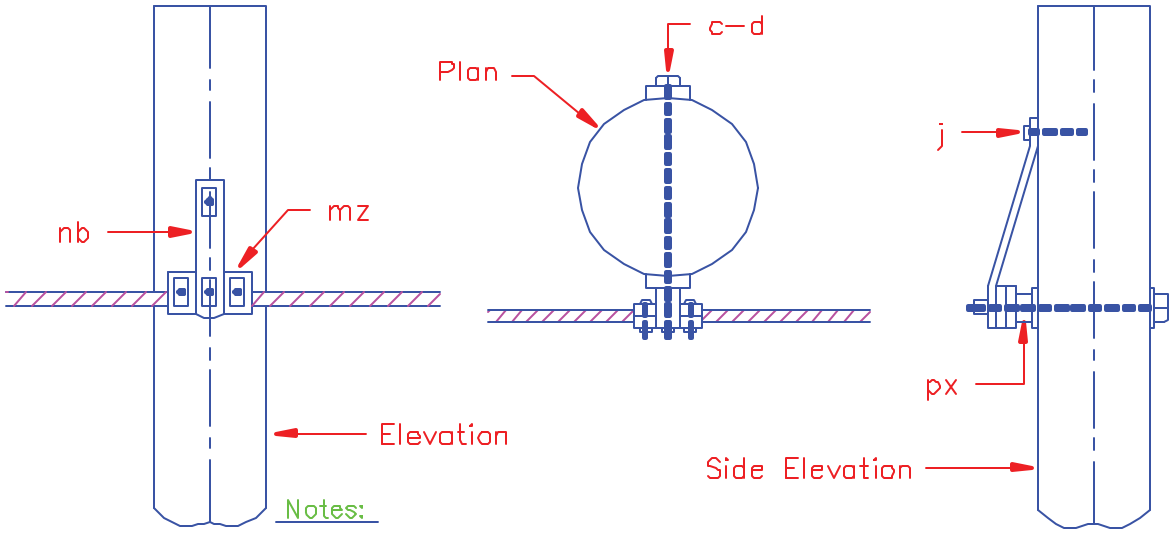

Notes:

1. Use for tangent to 15 degrees construction.
2. For converting English units to metric units use 1 in. = 25.4 mm.

ITEMS	MATERIALS	6M NO. REQ'D	10M NO. REQ'D	16M NO. REQ'D
c	Bolts, machine, 5/8" x required length	1	1	1
d	Washers, curved, 2 1/2" x 2 1/2" x 3/16", 11/16" hole	2	2	2
j	Screws, lag, 1/2" x 4"	–	1	1
px	Nuts, regular square, 5/8"	1	1	1
mz	Clamps, cable, suspension	1	1	1
nb	Straps, suspension clamp, reinforcement	–	1	1

RURAL TELECOMMUNICATION CONSTRUCTION PRACTICES
SUSPENSION STRAND MOUNTING

Scale: NTS | March 2001

201

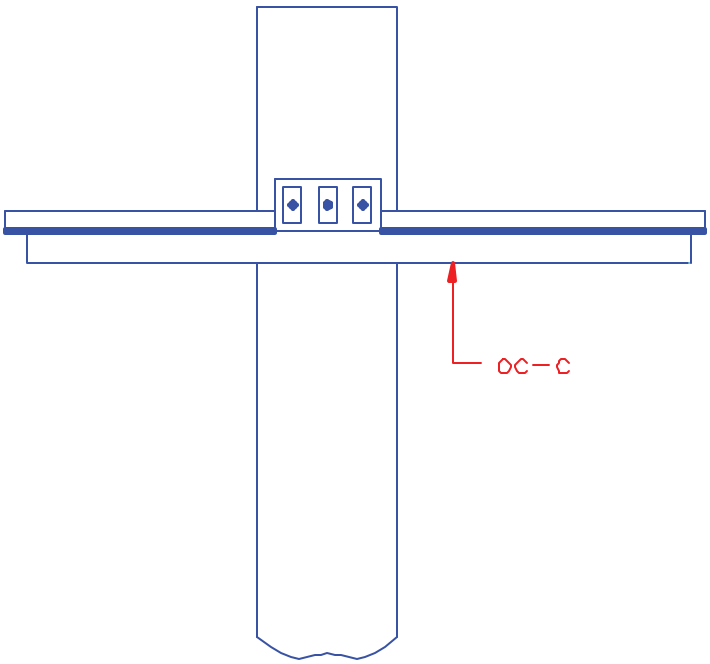

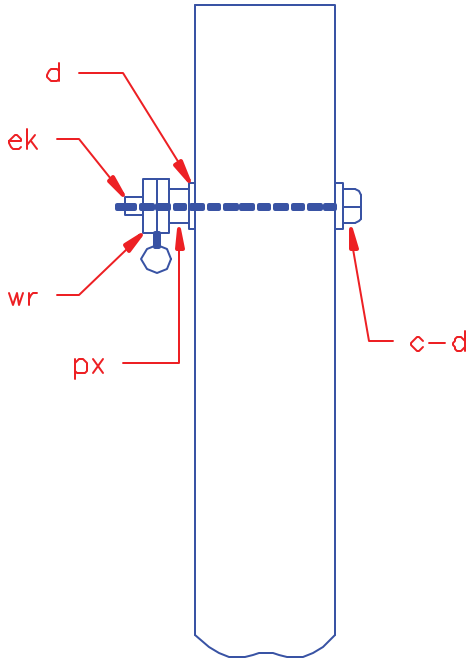

Notes:

1. Use for corners from 0 to 20 degrees.
2. Place cable in clamp without removing support wire insulation or slitting web.
3. For converting English units to metric units use 1 in. = 25.4 mm.

ITEMS	MATERIALS	NO. REQ'D
oc-c	Cable, filled, fiber optic, self-supporting (figure 8 design)	as required
*wr	Clamp, support, self-supporting, cable	1
c	Bolt, machine, 5/8" x required length	1
d	Washers, 2 1/4" x 2 1/4" x 3/16", 11/16" hole	2
px	Nut, square	1
ek	Locknut, 5/8"	1

RURAL TELECOMMUNICATIONS CONSTRUCTION PRACTICES
SELF-SUPPORTING FILLED FIBER OPTIC CABLE SUPPORT

Scale: NTS	March 2001
	201-1

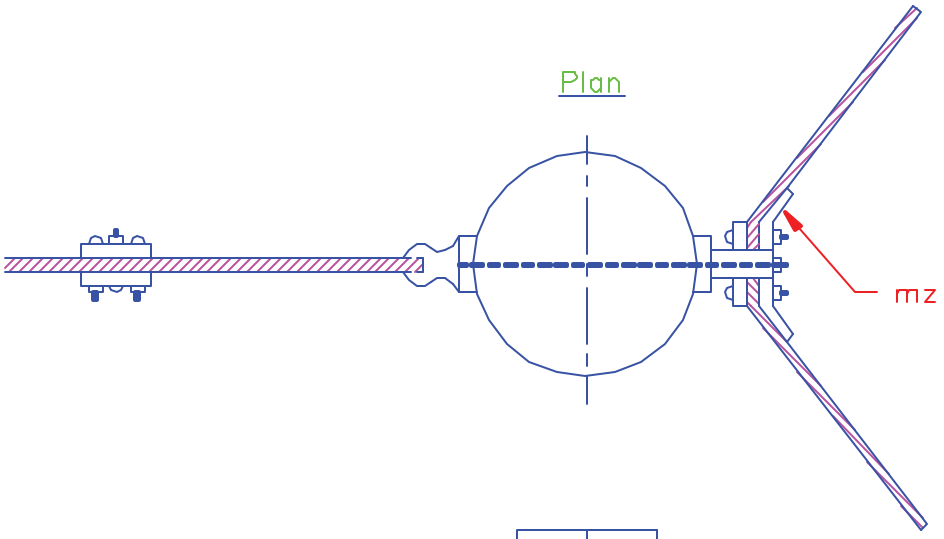

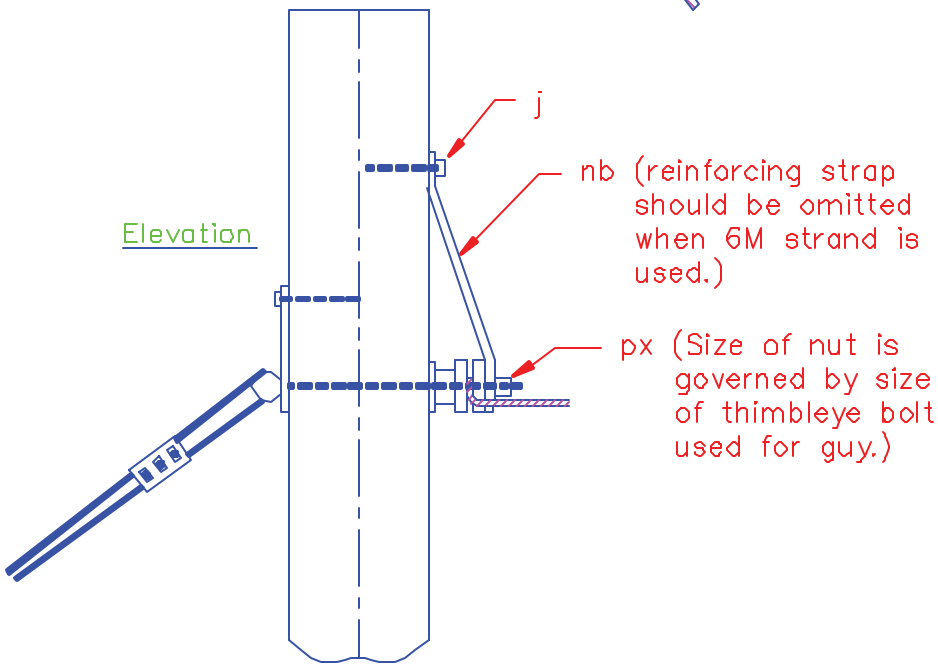

Notes:

1. Use for corners from 15 to 60 degrees.
2. See guy assembly drawings for guying, materials.

		6M	10M	16M
ITEMS	MATERIALS	NO. REQ'D	NO. REQ'D	NO. REQ'D
j	Screws, lag, 1/2 in x 4 in. (13 mm x 102 mm)	–	1	1
px	Nuts, regular square	1	1	1
mz	Clamps, corner suspension	1	1	1
nb	Straps, suspension clamp, reinforcement	–	1	1

RURAL TELECOMMUNICATIONS CONSTRUCTION PRACTICES
SUSPENSION STRAND MOUNTING
(PULL AWAY FROM POLE)

Scale: NTS | March 2001

202

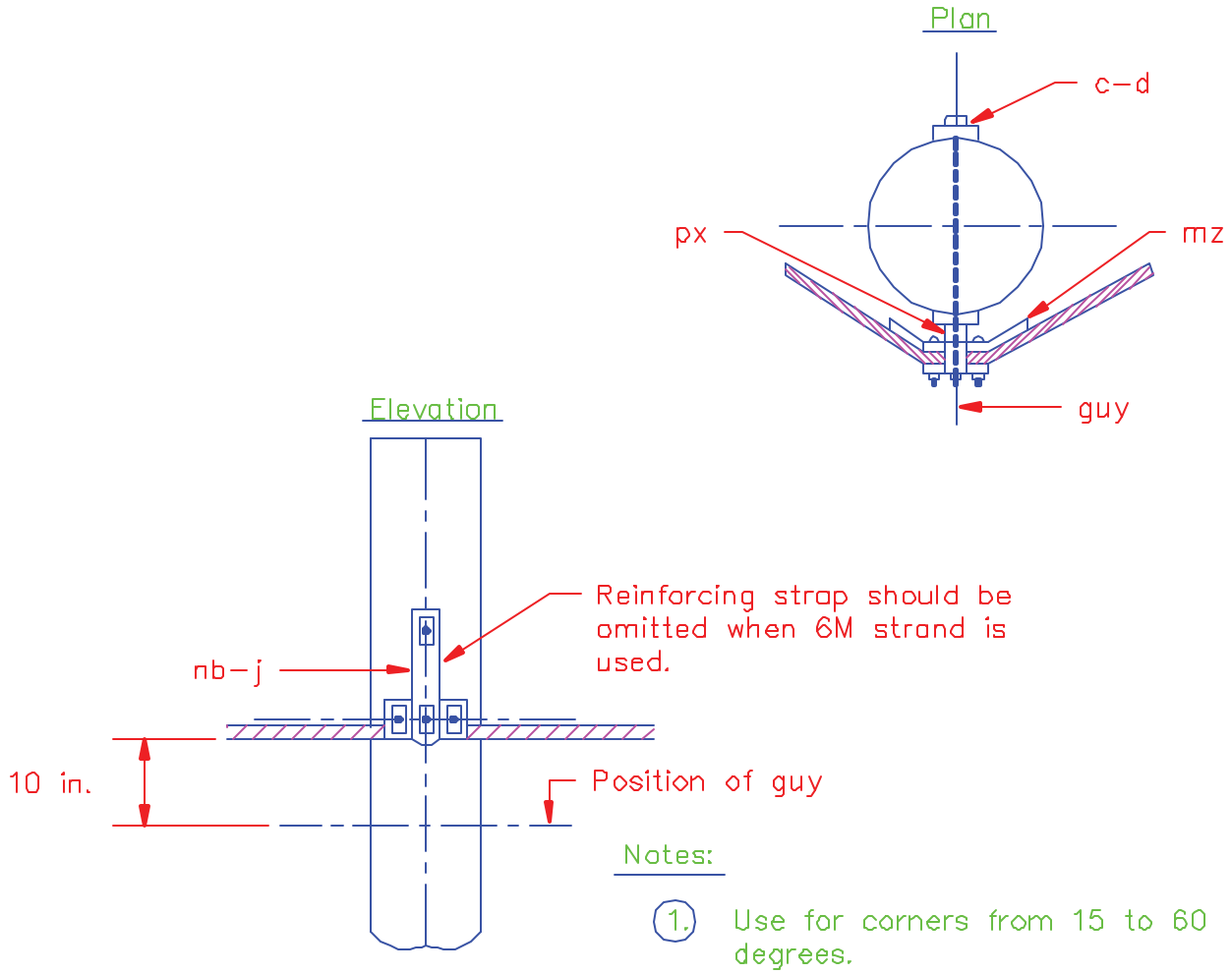

Notes:

1. Use for corners from 15 to 60 degrees.
2. For converting English units to metric units use 1 in. = 25.4 mm.

		6M	10M	16M
ITEMS	MATERIALS	NO. REQ'D	NO. REQ'D	NO. REQ'D
c	Bolts, machine, 5/8" x required length	1	1	–
d	Washers, curved, 2 1/2" x 2 1/2" x 3/16", 11/16" hole	1	1	–
px	Nuts, regular square, 5/8"	1	1	–
j	Screws, lag, 1/2" x 4"	–	1	1
nb	Straps, suspension clamp, reinforcement	–	1	1
mz	Clamps, corner suspension	1	1	1
c	Bolts, machine, 3/4" x required length	–	–	1
d	Washers, curved, 3" x 3" x 1/4", 13/16" hole	–	–	2
px	Nuts, regular square, 3/4"	–	–	1

RURAL TELECOMMUNICATIONS CONSTRUCTION PRACTICES
SUSPENSION STRAND MOUNTING
(PULL AGAINST POLE)

Scale: NTS | March 2001

202-1

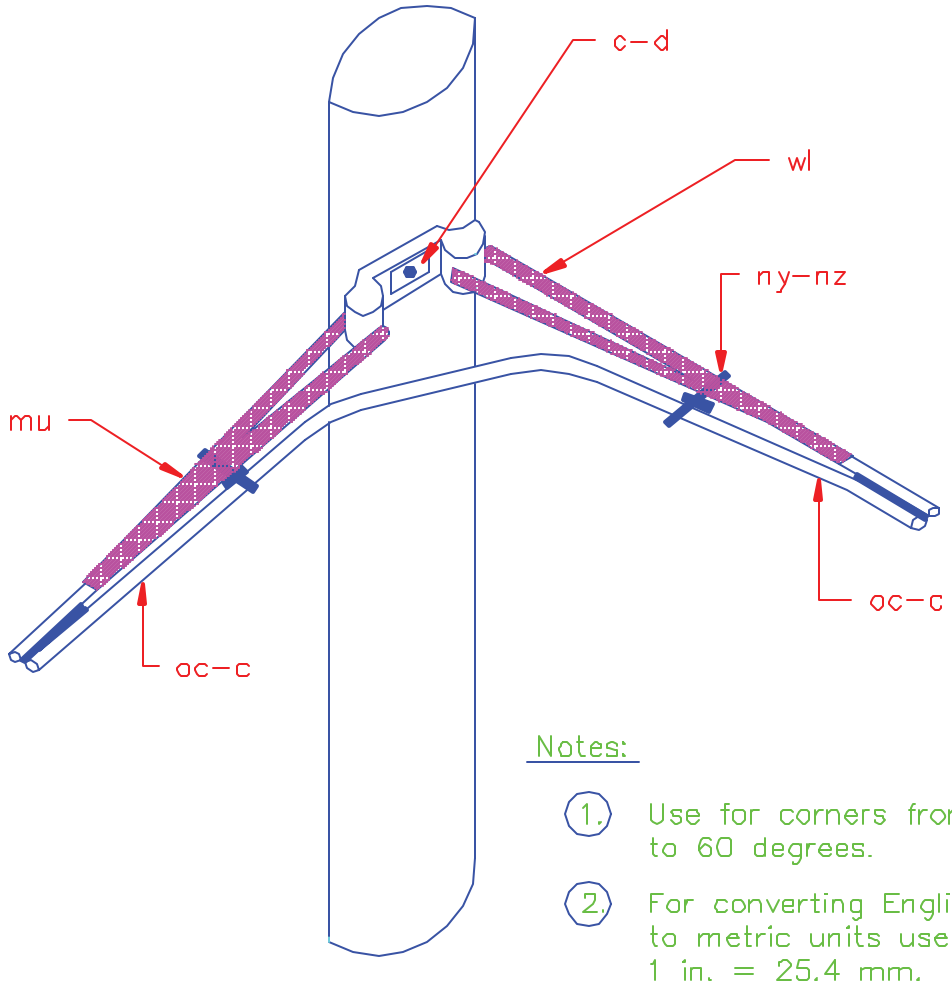

Notes:

1. Use for corners from 20 to 60 degrees.
2. For converting English units to metric units use 1 in. = 25.4 mm.

ITEMS	MATERIALS	NO. REQ'D
oc-c	Cable, filled, fiber optic, self-supporting (figure 8 design)	as required
*wl	Support, double deadend	1
*mu	Sleeves, splicing (deadending, preformed or automatic type)	2
*ny	Spacers, cable	2
*nz	Supports, lashed cable	2
d	Washers, 2 1/4" x 2 1/4" x 3/16", 11/16" hole	1
c	Bolts, machine, 5/8" x required length	1

RURAL TELECOMMUNICATIONS CONSTRUCTION PRACTICES
SELF-SUPPORTING FILLED FIBER OPTIC CABLE SUPPORT, CORNER

Scale: NTS		March 2001
		202-3

Notes:

1. Use for corners from 60 to 90 degrees.

2. An equivalent terminating device (mu) rated to provide the strength of the appropriate suspension strand may be used in lieu of 3-bolt guy clamps listed.

3. Square nut under eye nut may be omitted when length of bolt thread extending beyond pole is short enough to permit turning eye nut down to curved washer without interfering with the placing of strand.

4. Refer to guy assembly drawings PE1-2, -3, -4; PE1-2G, -3G, -4G; PE2-2, -3, -4; and PE2-2G, -3G, -4G for for guying materials.

5. Size of thimbleye nut is governed by size of thimbleye bolt used for guys.

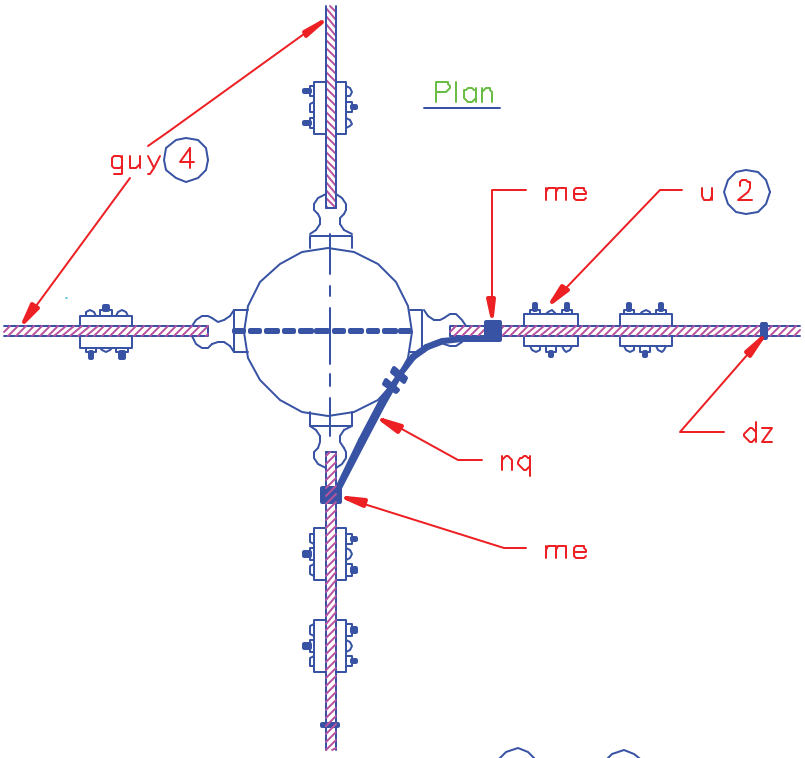

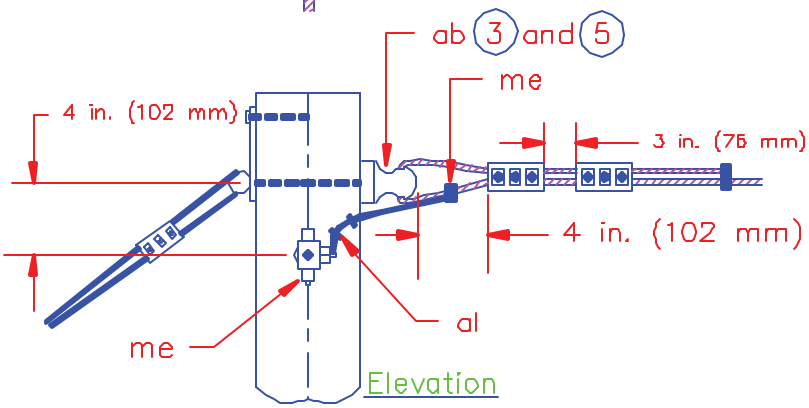

		6M	10M	16M
ITEMS	MATERIALS	NO. REQ'D	NO. REQ'D	NO. REQ'D
u	Clamps, guy, 3-bolt	1	1	2
ab	Nuts, thimbleye	1	1	1
*dz	Clips, guy	1	1	1
me	Connectors, grounding	2	2	2
*al	Staples, ground wire	as req'd	as req'd	as req'd
*nq	Wire, ground, bare, #6 AWG copper	as req'd	as req'd	as req'd

RURAL TELECOMMUNICATIONS CONSTRUCTION PRACTICES
SUSPENSION STRAND MOUNTING (CORNERS)

Scale: NTS | March 2001

203

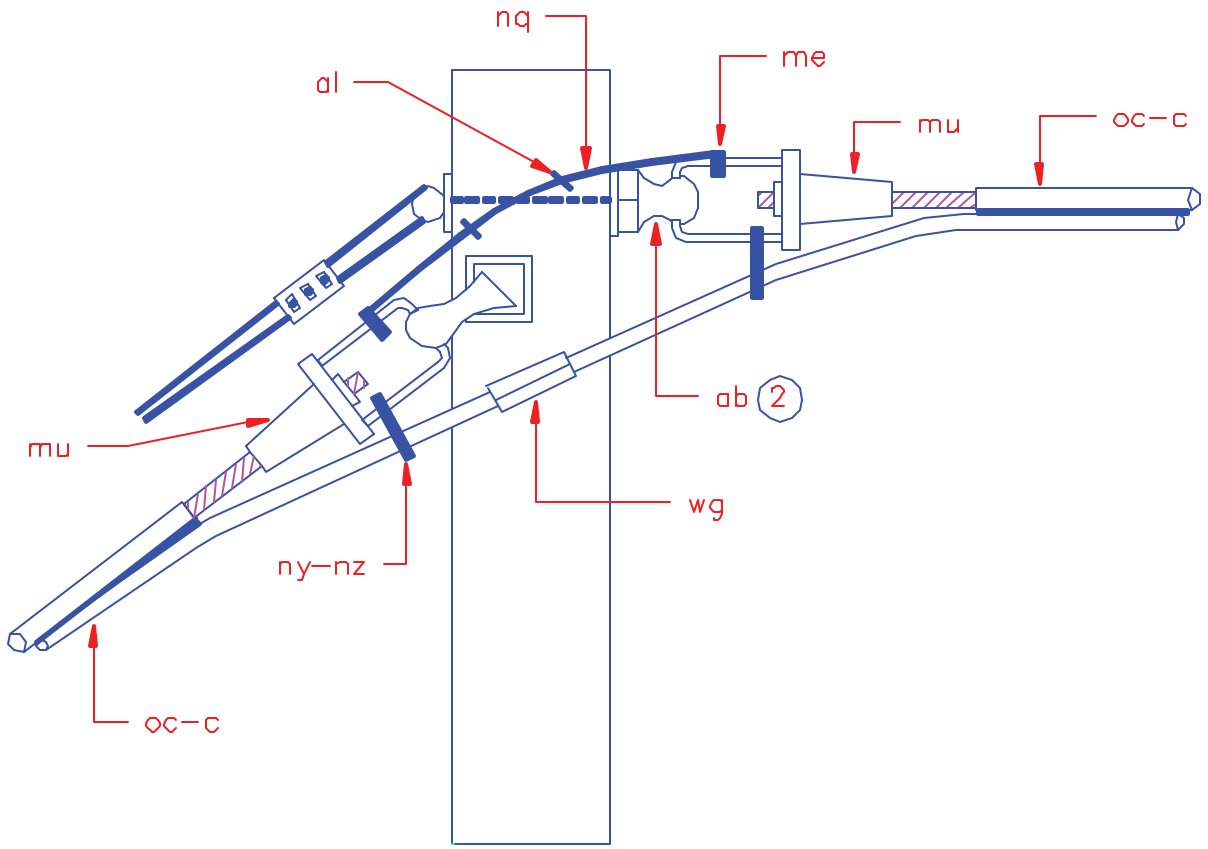

Notes:

(1.) Use for corners from 60 to 90 degrees.

(2.) Size of thimbleye nut is governed by size of thimbleye bolt used for guy.

ITEMS	MATERIALS	NO. REQ'D
oc-c	Cable, filled, fiber optic, self-supporting (figure 8 design)	as required
*mu	Sleeves, splicing (deadending, preformed or automatic type)	2
*ny	Spacers, cable	2
*nz	Supports, lashed cable	2
wg	Guard, plastic, cable	1
*nq	Wire, ground, bare, #6 AWG copper	as required
me	Connectors, grounding	2
ab	Nuts, thimbleye	2
*al	Staples, ground wire	as required

RURAL TELECOMMUNICATIONS CONSTRUCTION PRACTICES
SELF-SUPPORTING FILLED FIBER OPTIC CABLE SUPPORT, CORNER

Scale: NTS		March 2001
		203-1

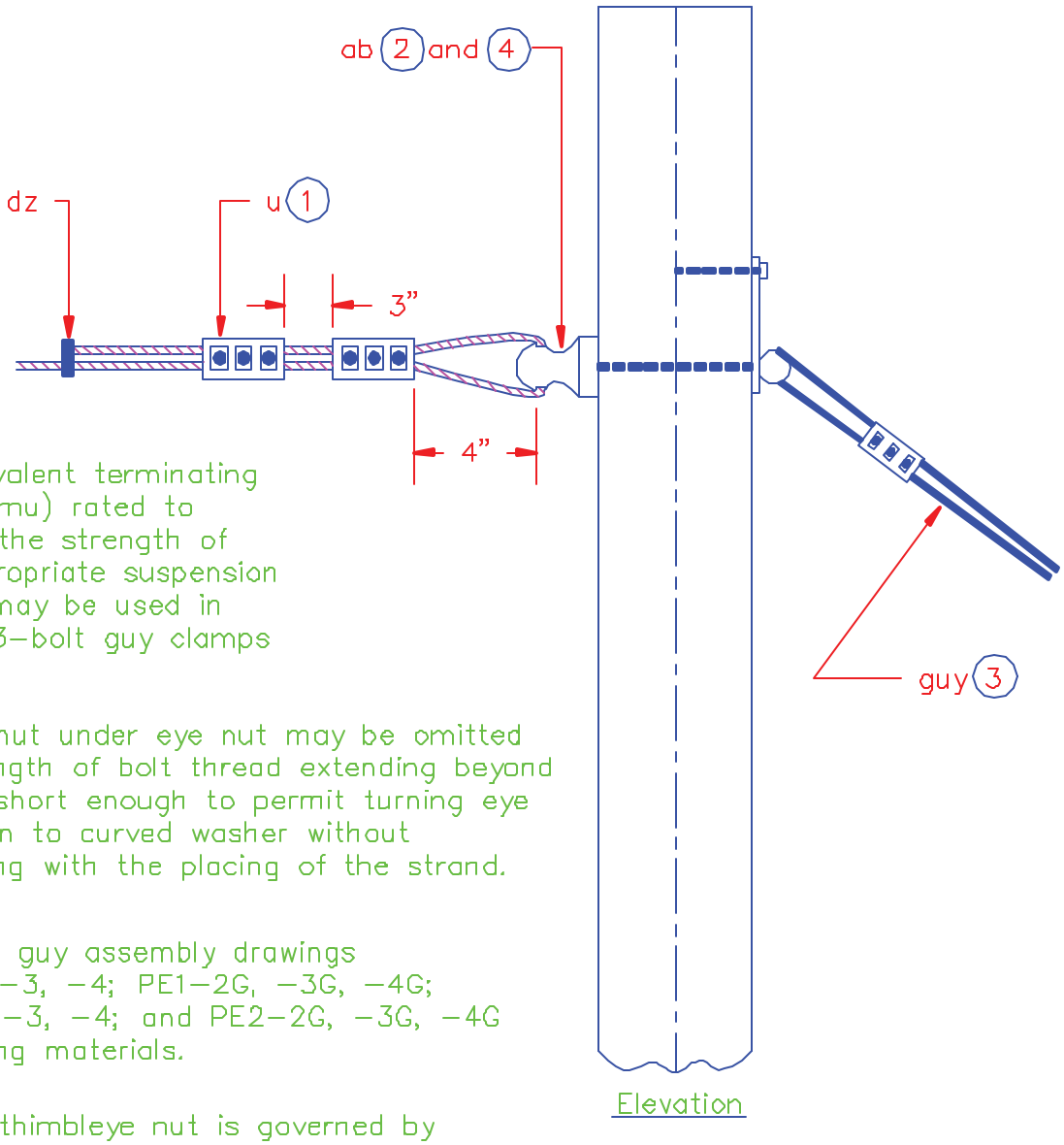

Elevation

Notes:

1. An equivalent terminating device (mu) rated to provide the strength of the appropriate suspension strand may be used in lieu of 3-bolt guy clamps listed.

2. Square nut under eye nut may be omitted when length of bolt thread extending beyond pole is short enough to permit turning eye nut down to curved washer without interfering with the placing of the strand.

3. Refer to guy assembly drawings PE1-2, -3, -4; PE1-2G, -3G, -4G; PE2-2, -3, -4; and PE2-2G, -3G, -4G for guying materials.

4. Size of thimbleye nut is governed by the size of the thimbleye bolt used for the guys.

5. For converting English units to metric units use 1 in. = 25.4 mm.

		6M	10M	16M
ITEMS	MATERIALS	NO. REQ'D	NO. REQ'D	NO. REQ'D
u	Clamps, guy, 3-bolt	1	1	2
ab	Nuts, thimbleye	1	1	1
*dz	Clips, guy	1	1	1

RURAL TELECOMMUNICATIONS CONSTRUCTION PRACTICES
SUSPENSION STRAND DEADEND

Scale: NTS | March 2001

204

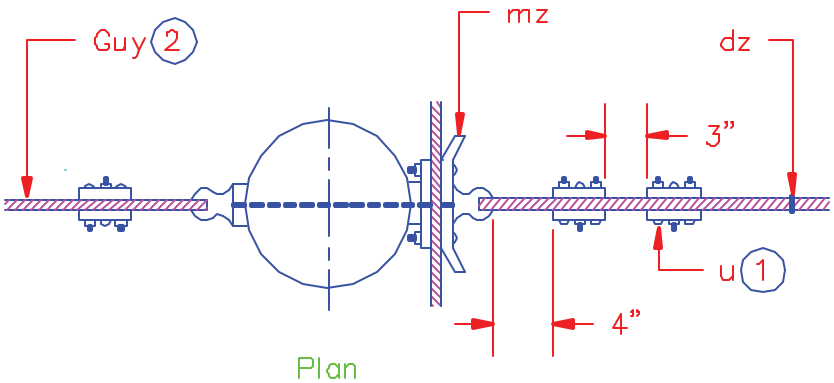

Plan

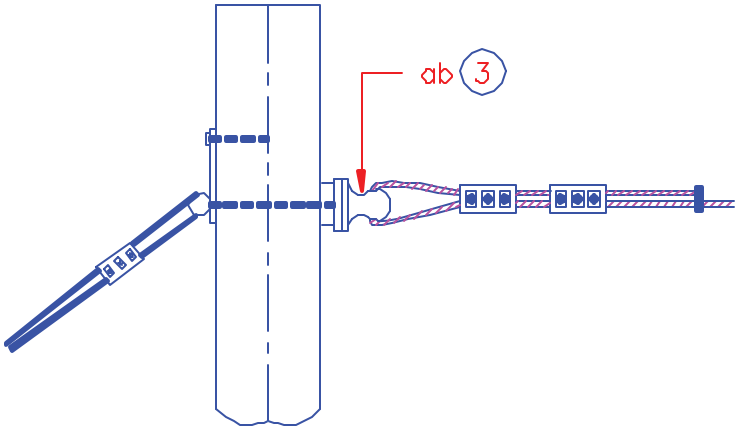

Elevation

Notes:

1. An equivalent terminating device (mu) rated to provide the strength of the appropriate suspension strand may be used in lieu of 3-bolt guy clamps listed.

2. Refer to guy assembly drawings PE1-2, -3, -4; PE1-2G, -3G, -4G; PE2-2, -3, -4; and PE2-2G, -3G, -4G for guying materials.

3. Size of thimbleye nut is governed by the size of the thimmbleye bolt used for the guys.

4. For converting English units to metric units use 1 in. = 25.4 mm.

		6M	10M	16M
ITEMS	MATERIALS	NO. REQ'D	NO. REQ'D	NO. REQ'D
u	Clamps, guy, 3-bolt	1	1	2
ab	Nuts, thimbleye	1	1	1
*dz	Clips, guy	1	1	1
mz	Clamps, suspension, corner	1	1	1

RURAL TELECOMMUNICATIONS CONSTRUCTION PRACTICES
BRANCH SUSPENSION STRAND

Scale: NTS | March 2001

206

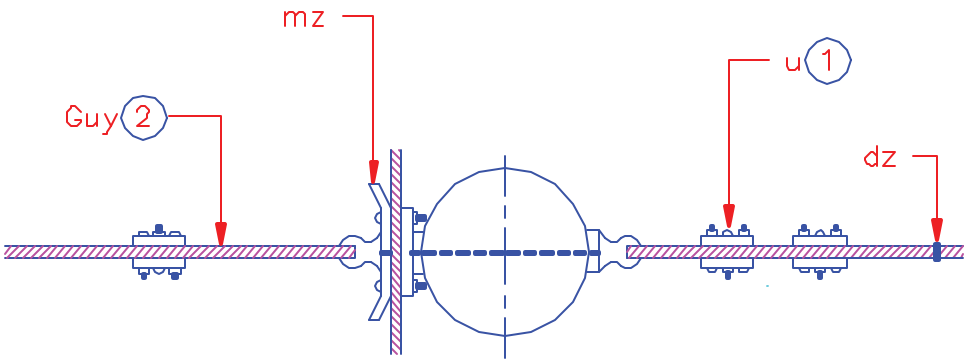

Plan

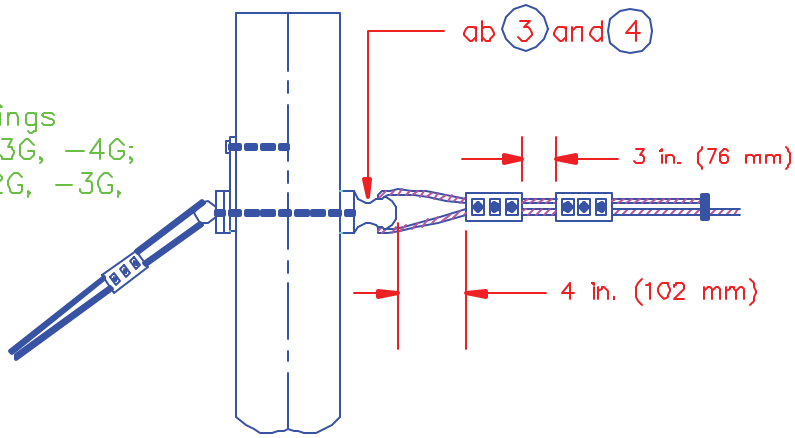

Elevation

Notes:

1. An equivalent terminating device (mu) rated to provide the strength of the appropriate suspension strand may be used in lieu of 3-bolt guy clamps listed.

2. Refer to guy assembly drawings PE1-2, -3, -4; PE1-2G, -3G, -4G; PE2-2, -3, -4; and PE2-2G, -3G, -4G for guying materials.

3. Size of the thimbleye nut is governed by the size of the thimbleye bolt used for the guys.

4. Square nut under eye nut may be omitted when length of bolt thread extending beyond pole is short enough to permit turning eye nut down to curved washer without interfering with the placing of strand.

		6M	10M	16M
ITEMS	MATERIALS	NO. REQ'D	NO. REQ'D	NO. REQ'D
u	Clamps, guy, 3-bolt	1	1	2
ab	Nuts, thimbleye	1	1	1
*dz	Clips, guy	1	1	1
mz	Clamps, suspension, corner	1	1	1

RURAL TELECOMMUNICATIONS CONSTRUCTION PRACTICES
BRANCH SUSPENSION STRAND

Scale: NTS | March 2001

207

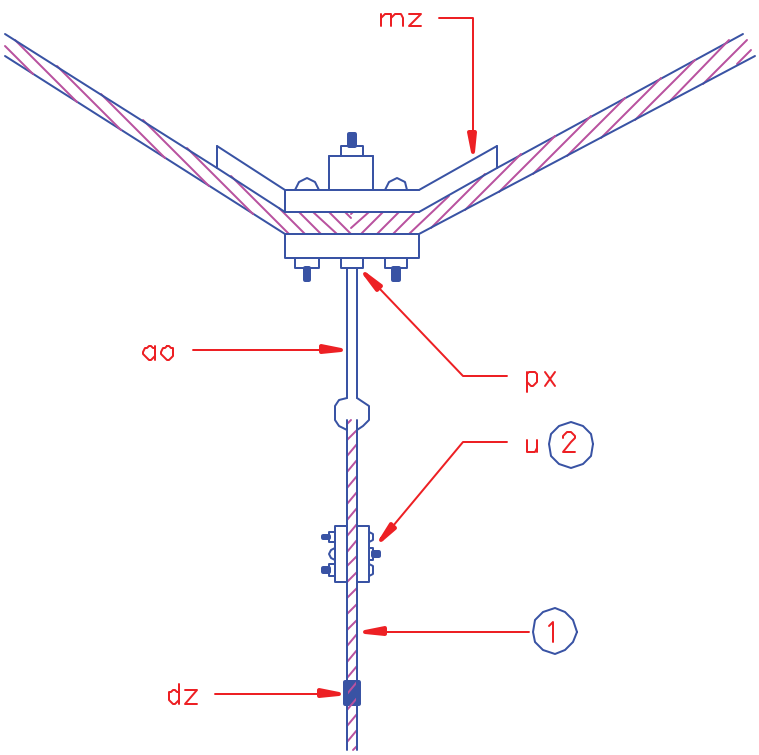

Plan

Notes:

1. Assembly unit designations refer to this strand.

2. An equivalent terminating device (mu) rated to provide the strength of the appropriate suspension strand may be used in lieu of 3-bolt guy clamps listed.

ITEMS	MATERIALS	6M NO. REQ'D	10M NO. REQ'D	16M NO. REQ'D
mz	Clamps, corner suspension	1	1	1
u	Clamps, guy, 3-bolt	1	1	2
*dz	Clips, guy	–	–	1
ao	Bolts, thimbleye, 3/4 in. (19 mm) diameter	–	–	1
ao	Bolts, thimbleye, 5/8 in. (16 mm) diameter	1	1	–
px	Nuts, regular square, 5/8 in. (16 mm)	1	1	–
px	Nuts, regular square, 3/4 in. (19 mm)	–	–	1

RURAL TELECOMMUNICATIONS CONSTRUCTION PRACTICES
SUSPENSION STRAND PULL-OFF

Scale: NTS | March 2001

208

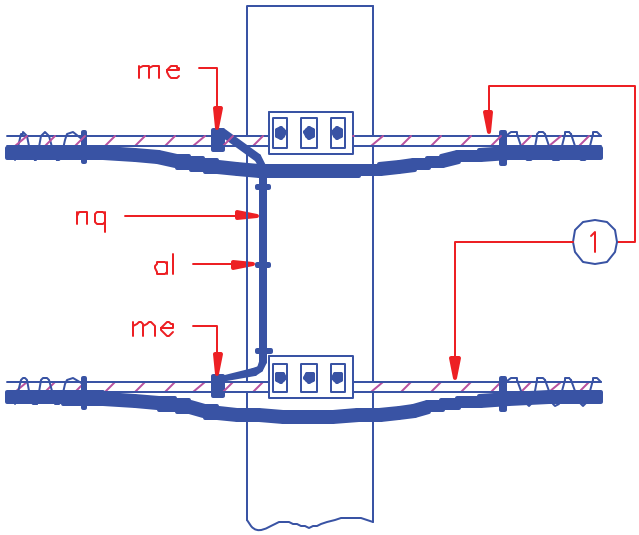

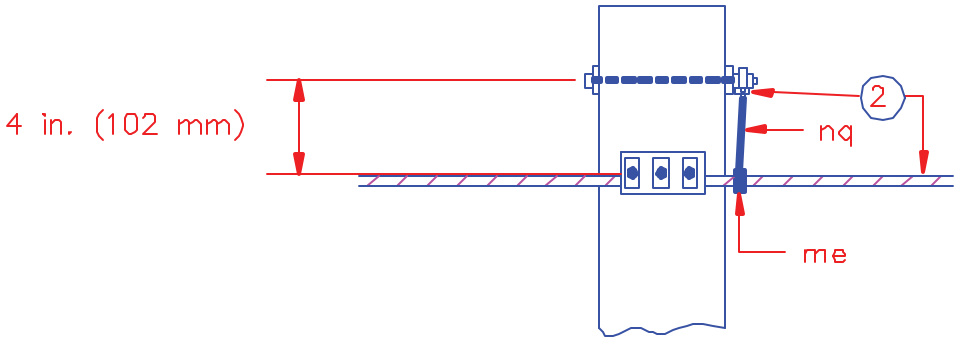

Notes:

1. On pole lines carrying two strand-mounted cable leads and paralleling each other, the suspension strands shall be bonded at each end of the joint section and at approximately 1/4-mile (402 m) intervals as directed by the Engineer.

2. Where two cable leads cross each other at a pole, the two strands shall be bonded as shown.

ITEMS	MATERIALS	NO. REQ'D
me	Connectors, grounding	2
*nq	Wire, ground, bare, #6 AWG copper	as required
*al	Staples, ground wire	as required

RURAL TELECOMMUNICATIONS CONSTRUCTION PRACTICES
SUSPENSION STRAND BONDING

Scale: NTS

March 2001

209-1

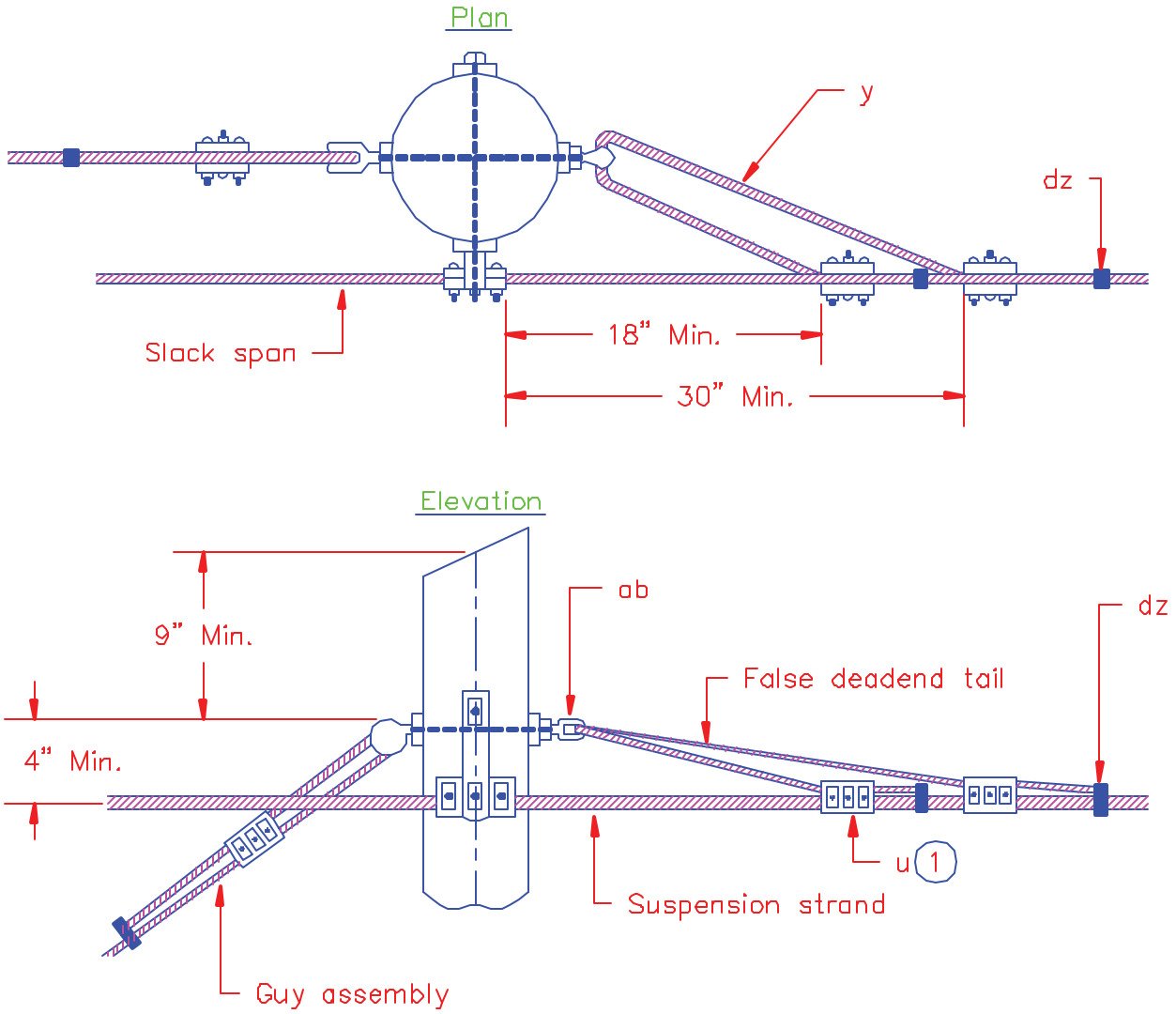

Notes:

1. An equivalent terminating device (mu) rated to provide the strength of the appropriate suspension strand may be used in lieu of 3-bolt guy clamps listed.

2. For converting English units to metric units use 1 in. = 25.4 mm.

		6M	10M	16M
ITEMS	MATERIALS	NO. REQ'D	NO. REQ'D	NO. REQ'D
u	Clamps, guy, 3-bolt	2	2	2
y	Strand, as required	6M	10M	16M
ab	Nuts, thimbleye, for 5/8 in. (16 mm) bolt	1	1	—
ab	Nuts, thimbleye, for 3/4 in. (19 mm) bolt	—	—	1
*dz	Clips, guy	2	2	2

RURAL TELECOMMUNICATIONS CONSTRUCTION PRACTICES
FALSE DEADEND

Scale: NTS

March 2001

211

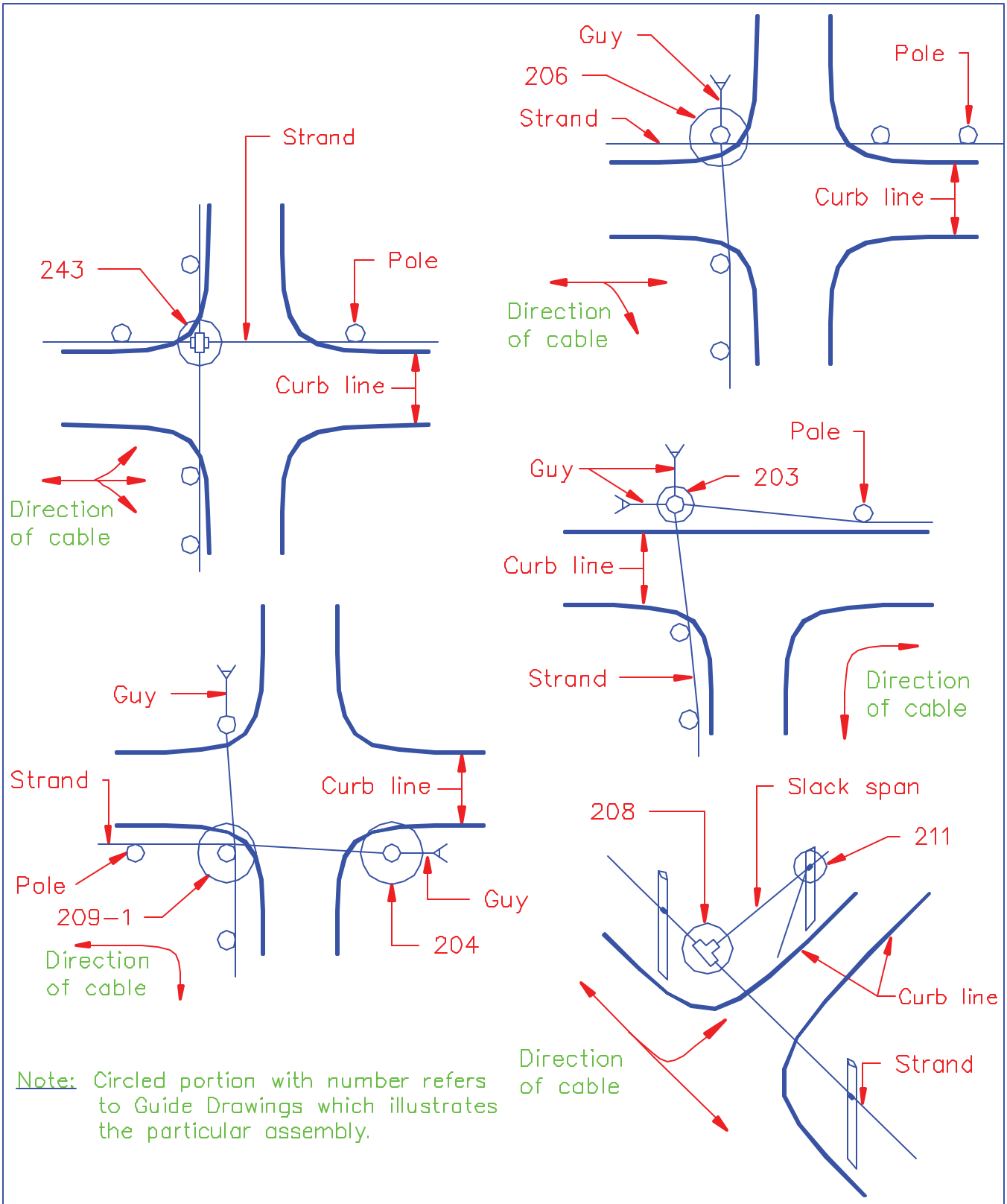

Note: Circled portion with number refers to Guide Drawings which illustrates the particular assembly.

RURAL TELECOMMUNICATIONS CONSTRUCTION PRACTICES STRAND LAYOUTS		
Scale: NTS		March 2001
		212

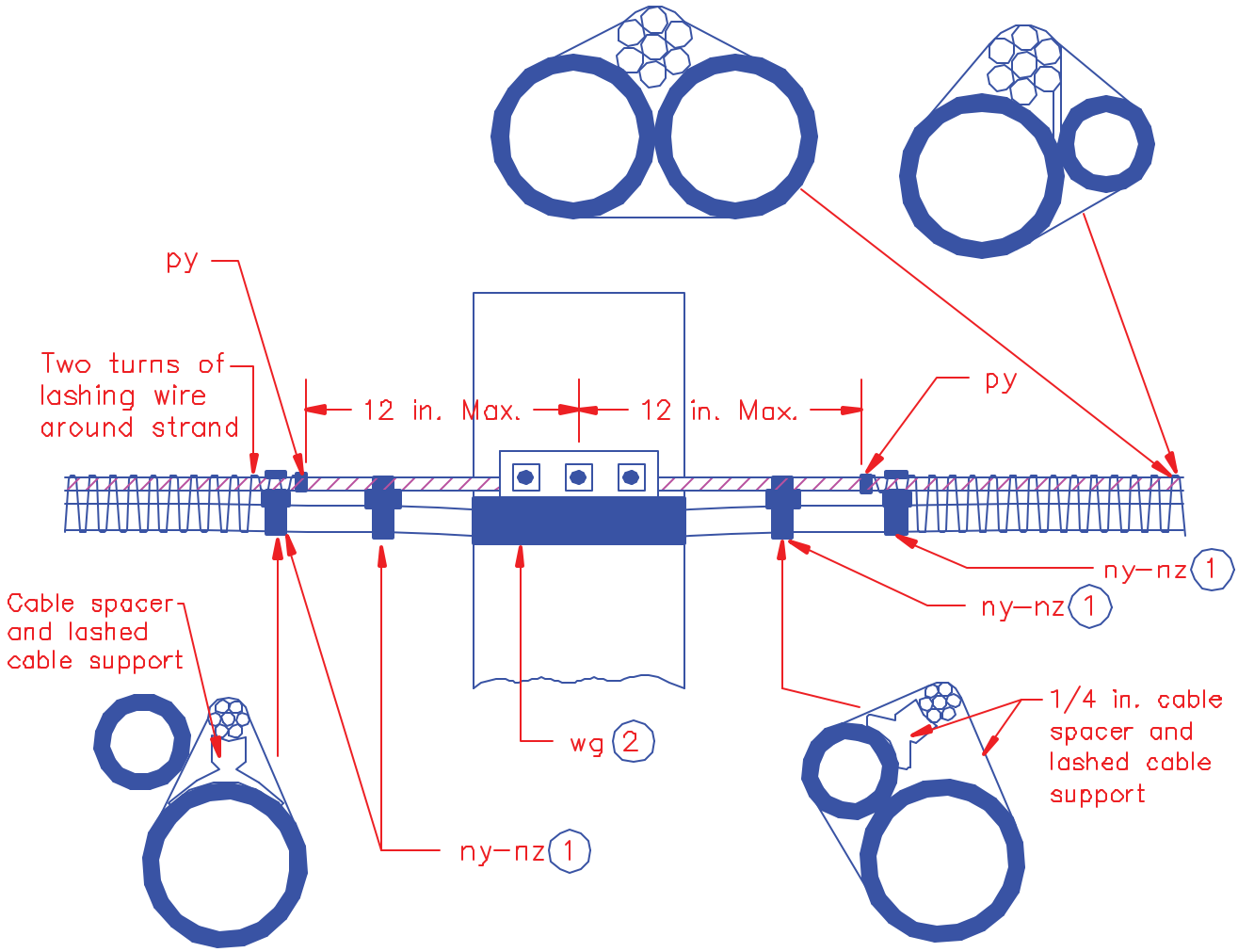

Notes:

1. Install cable spacers and lashed cable supports as needed to hold cable in position.
2. Place split cable guard around cable at point of contact with suspension clamp to prevent abrasion of cable. Secure split cable guard to cable by means of 3 full layers of vinyl tape.
3. For converting English units to metric units 1 in. = 25.4 mm.

ITEMS	MATERIALS
*py	Clamps, terminating, lashing wire
*ny	Spacers, cable, 1/4"
*nz	Supports, lashed cable
wg	Guards, cable, split

RURAL TELECOMMUNICATIONS CONSTRUCTION PRACTICES
ARRANGEMENT DETAILS OF CABLES AT
POLE SUPPORTS

Scale: NTS		March 2001
		214

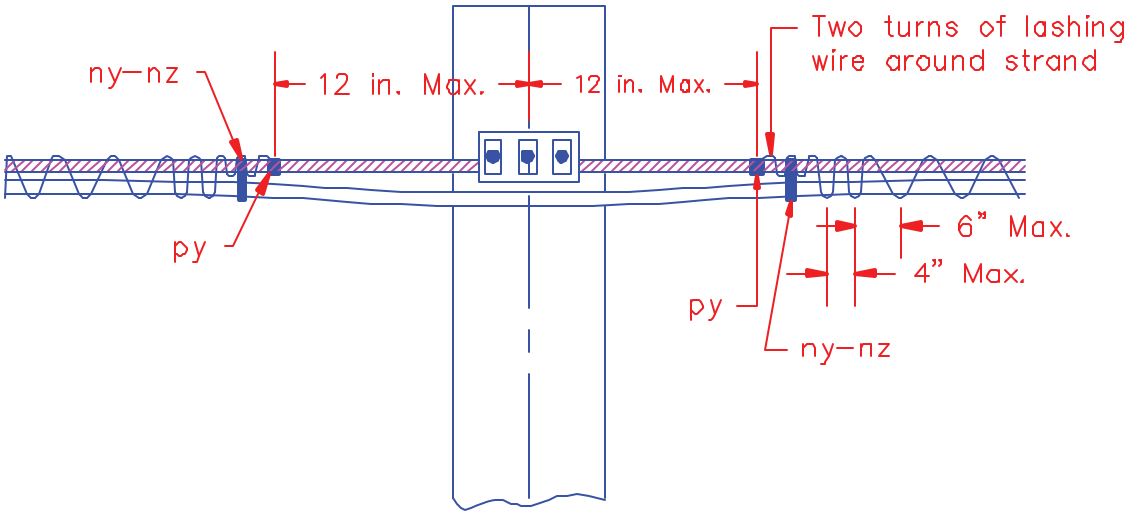

No Splice at Pole

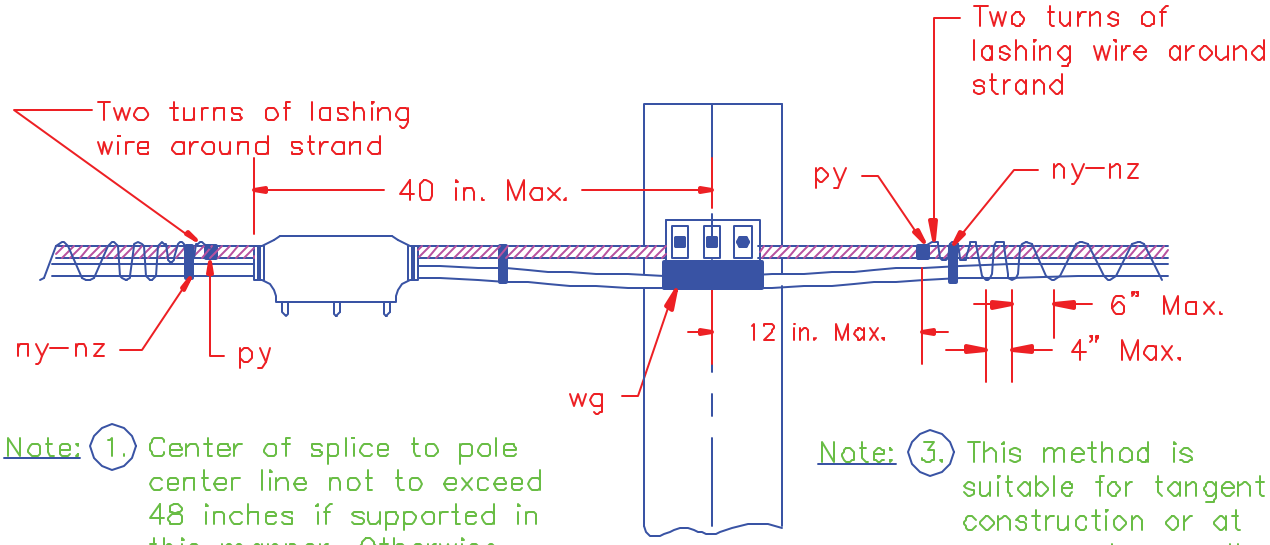

Note: (1.) Center of splice to pole center line not to exceed 48 inches if supported in this manner. Otherwise treat as a midspan splice.

Note: (2.) For converting English units to metric units use 1 in. = 25.4 mm.

Note: (3.) This method is suitable for tangent construction or at corners where pull is away from pole.

Splice at Pole

ITEMS	MATERIALS	NO. REQ'D
*ny	Spacers, cable	2
*nz	Supports, lashed cable	2
*py	Clamps, terminating, lashing wire	2
wg	Guard, cable, plastic	1

RURAL TELECOMMUNICATIONS CONSTRUCTION PRACTICES
LASHED CABLE SUPPORT AT POLE

Scale: NTS | March 2001

241

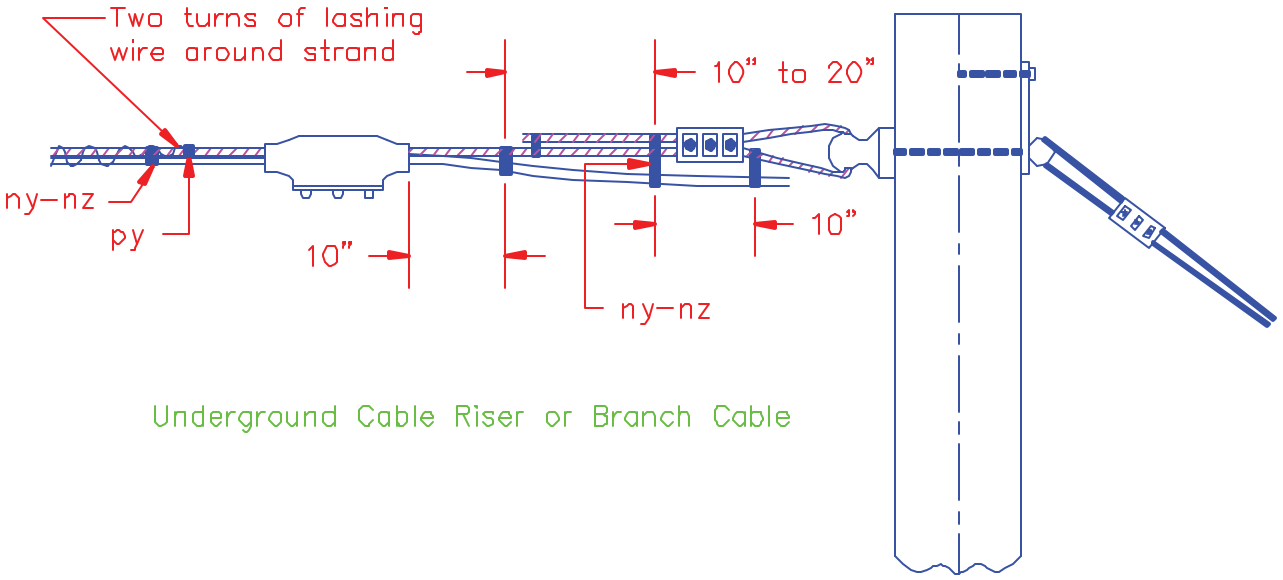

Underground Cable Riser or Branch Cable

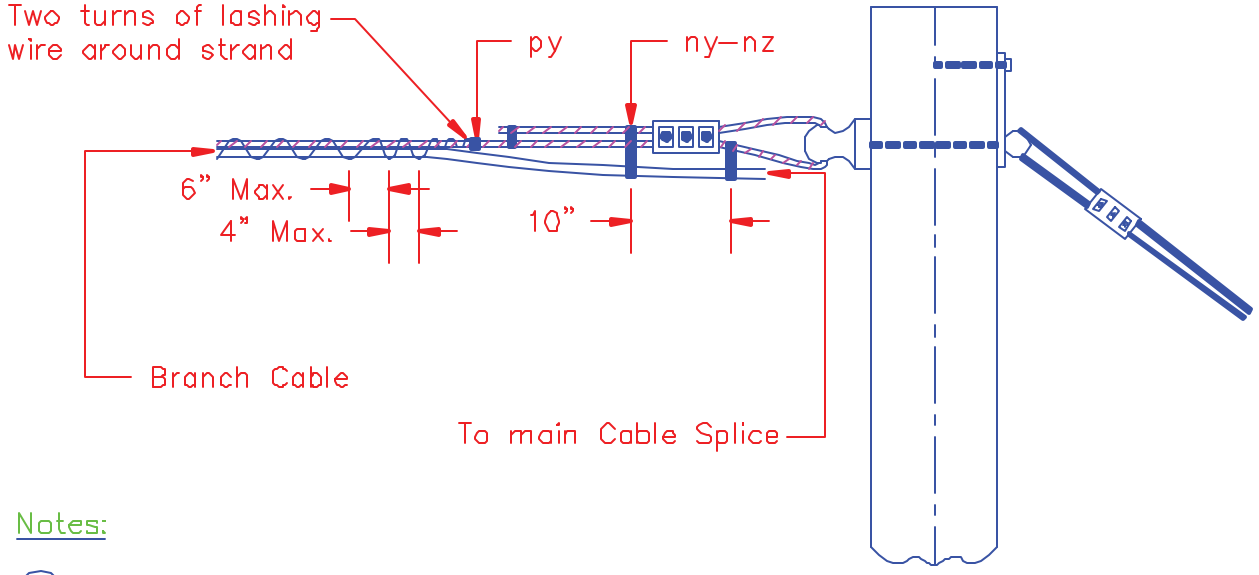

Notes:

1. For converting English units to metric units use 1 in. = 25.4 mm.
2. This method of terminating lashing wire should be used at deadend junction of aerial cable and underground riser, and junction of branch and main cable.

ITEMS	MATERIALS	NO. REQ'D
*ny	Spacers, cable	as required
*nz	Supports, lashed cable	as required
*py	Clamps, terminating, lashing wire	1

RURAL TELECOMMUNICATIONS CONSTRUCTION PRACTICES
LASHING WIRE TERMINATIONS

Scale: NTS | March 2001

242

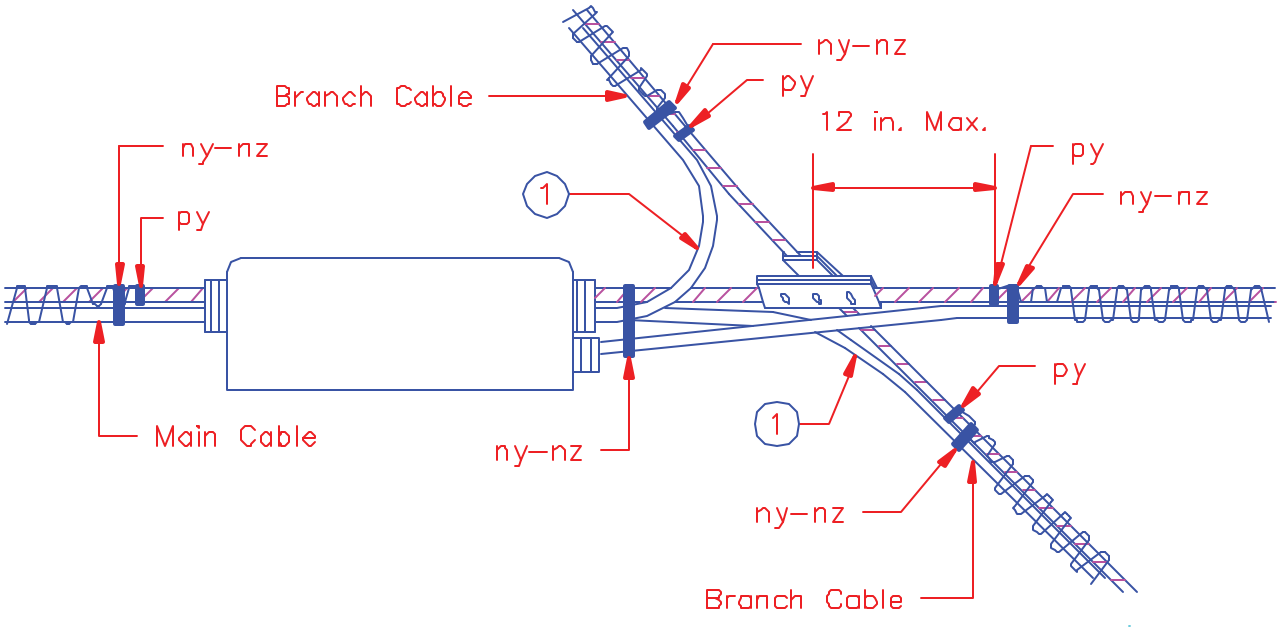

Notes:

1. The radius of bend shall not be less than 10 times the outside diameter for copper cables. THe radius of bend shall not be less than 20 times the outside diameter for fiber optic cables.

2. For converting English units to metric units use 1 in. = 25.4 mm.

ITEMS	MATERIALS	NO. REQUIRED
*ny	Spacers, cable	5
*nz	Supports, lashed cable	5
*py	Clamps, terminating, lashing wire	4

RURAL TELECOMMUNICATIONS CONSTRUCTION PRACTICES
LASHING WIRE TERMINATIONS AT
SUSPENSION STRAND CROSSOVERS

Scale: NTS		March 2001
		243

Spiraling Operation Detail

Step (1) Place split cable guards. (plastic)

Step (2) Loosen lashing wire clamps as required to allow for movement of lashing wire.

Step (3) Support and position cable as necessary for operation, using truck mounted derrick, block and tackle, or other means.

Step (4) Remove suspension clamp from through bolt allowing cable and strand to swing free.

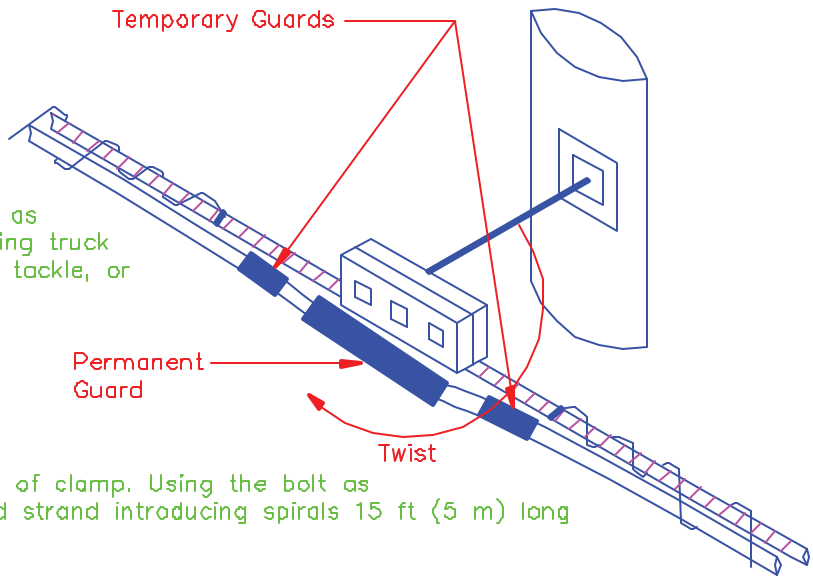

Step (5) Place a bolt in center hole of clamp. Using the bolt as a lever, twist the cable and strand introducing spirals 15 ft (5 m) long in the adjacent spans.

Step (6) In the spiraling operation, lashing wire will tighten in the span on one side of pole and loosen on the other. Lashing wire clamps shall be adjusted to allow for this movement. After spiraling, the lashing wire shall be adjusted, tapping on the strand as the lashing wire is pulled up or adjusted and clamps tightened to hold cable firmly in place.

Step (7) Reattach cable and remove temporary cable guards.

Step (8) A split cable guard shall also be installed on the cable at each tangent pole adjacent to the pole on which spiraling has been performed.

Position of Cable after Spiraling Operation

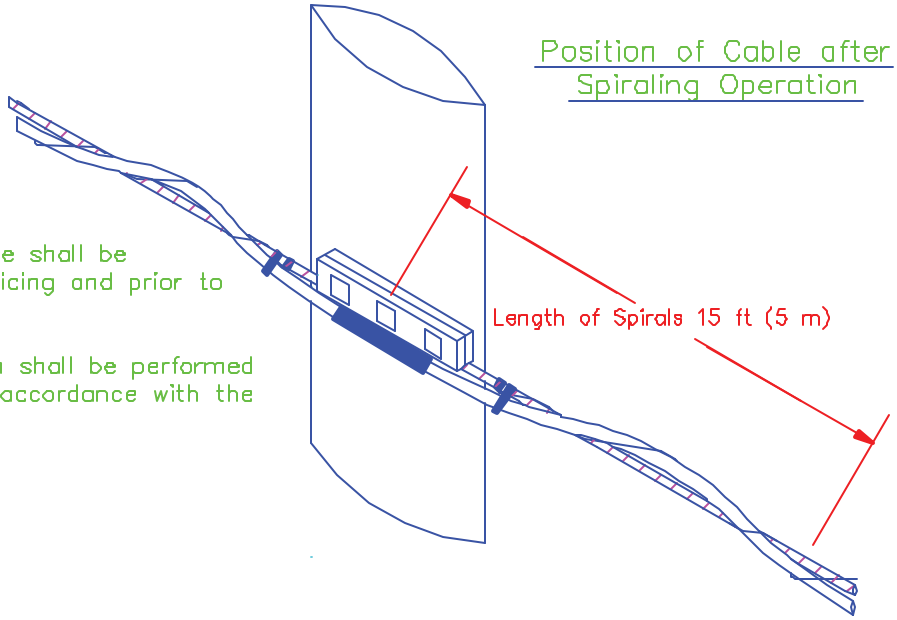

Notes:

1. Spiraling of aerial cable shall be performed prior to splicing and prior to mounting of terminals.
2. The spiraling operation shall be performed on alternate poles in accordance with the steps shown above.

RURAL TELECOMMUNICATIONS CONSTRUCTION PRACTICES METHOD OF SPIRALING AERIAL CABLE		
Scale: NTS		March 2001
		250

Spiraling Operation Detail

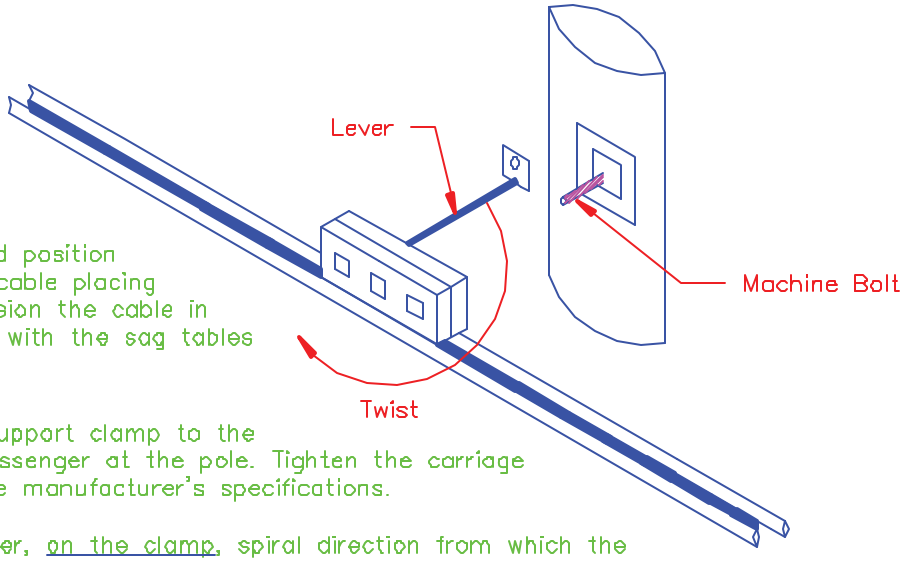

Step (1) Support and position cable with cable placing blocks. Tension the cable in accordance with the sag tables specified.

Step (2) Fasten a support clamp to the support messenger at the pole. Tighten the carriage bolts to the manufacturer's specifications.

Step (3) Using a lever, on the clamp, spiral direction from which the previous adjacent spiraling operation was performed. If the adjacent spans are unequal, use the shorter span for determining the number of spirals.

Step (4) Place the clamp on the machine bolt and tighten nuts to the manufacturer's specifications.

Position of Cable after Spiraling Operation

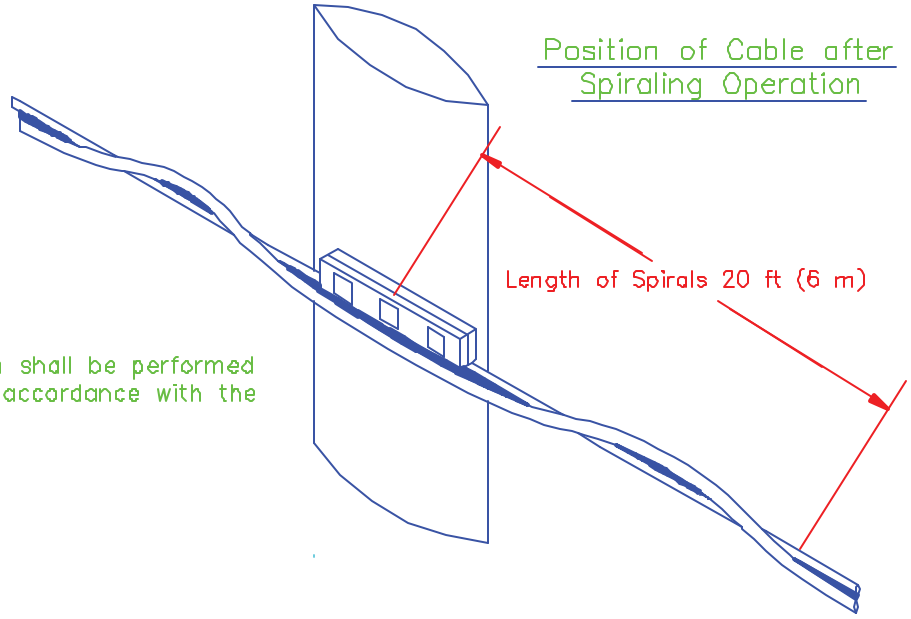

Note:

1. The spiraling operation shall be performed on alternate poles in accordance with the steps shown above.

RURAL TELECOMMUNICATIONS CONSTRUCTION PRACTICES METHOD OF SPIRALING SELF-SUPPORTING FILLED FIBER OPTIC CABLE (FIGURE 8 DESIGN)		
Scale: NTS		March 2001
		250-1

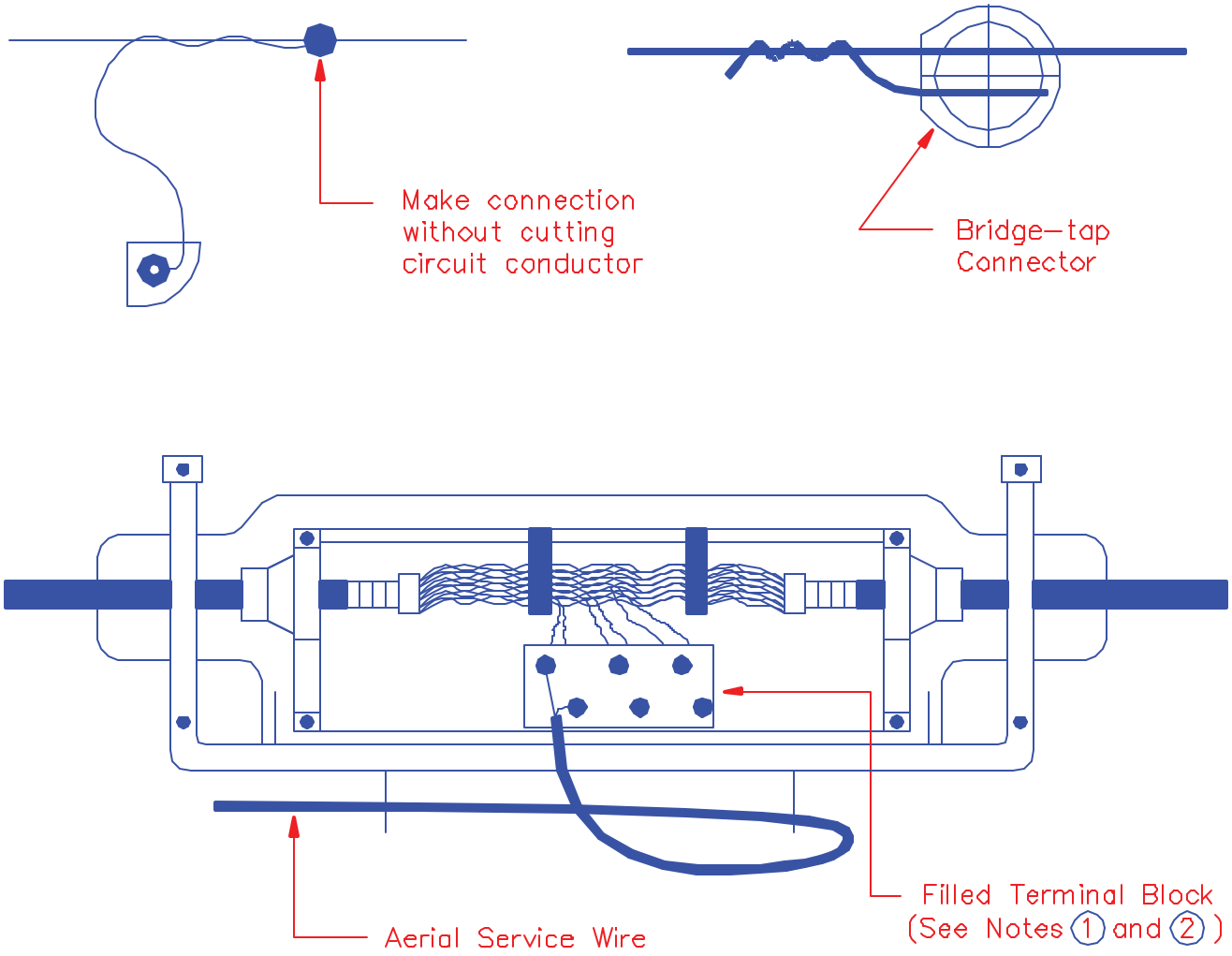

Notes:

1. Where aerial service wire connections are made along aerial plastic cable, unprotected filled terminal blocks equipped with lead-out wires shall be used.

2. Conductors of the aerial service wire shall be connected directly to the binding posts of the filled terminal block.

RURAL TELECOMMUNICATIONS CONSTRUCTION PRACTICES AERIAL PLASTIC CABLE DETAILS OF WIRE CONNECTIONS TO FILLED TERMINAL BLOCKS		
Scale: NTS		March 2001
		312-1

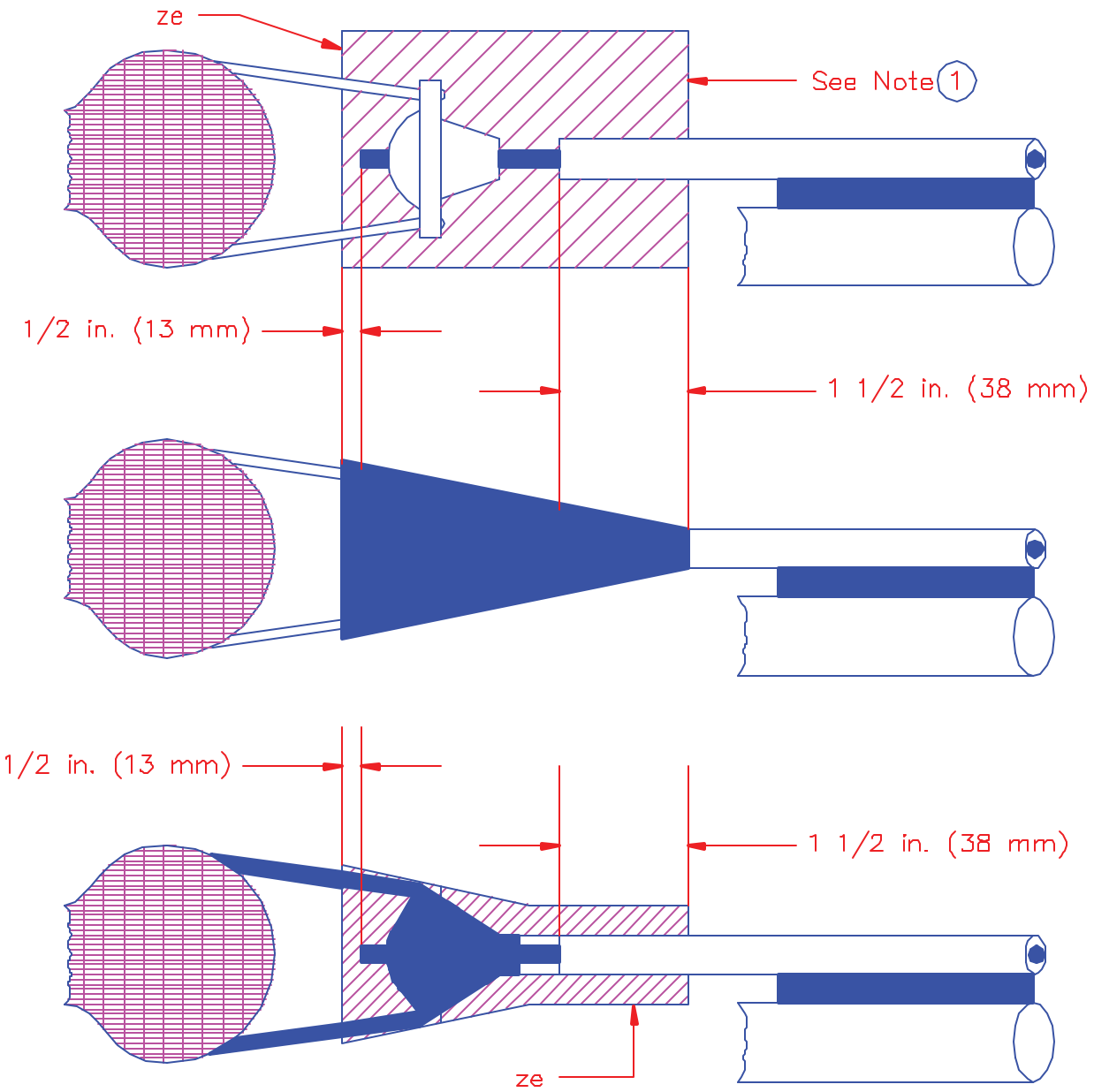

Note:

1. Mold sealing compound with fingers to provide a tight seal and a neat appearance. Restoration of the insulation on support wire in places other than at deadends shall be accomplished in a similar manner.

ITEM	MATERIAL	NO. REQUIRED
*ze	Compound, sealing	As required

RURAL TELECOMMUNICATIONS CONSTRUCTION PRACTICES
METHOD OF RESTORING INSULATION ON SUPPORT MEMBER OF SELF-SUPPORTING FILLED FIBER OPTIC CABLE (FIGURE 8 DESIGN)

Scale: NTS	March 2001
	360

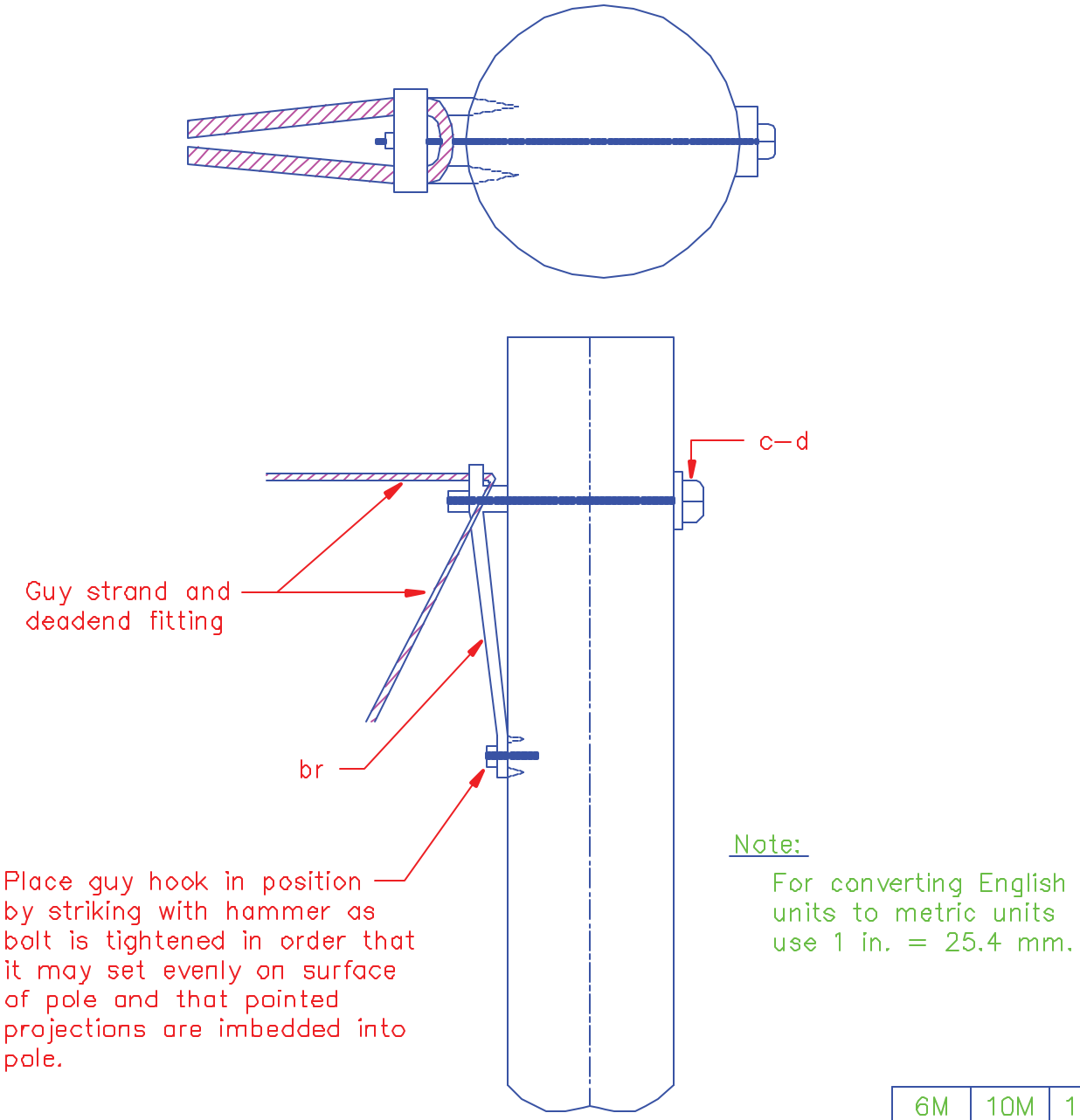

Note:

For converting English units to metric units use 1 in. = 25.4 mm.

ITEMS	MATERIALS	6M NO. REQ'D	10M NO. REQ'D	16M NO. REQ'D
br	Hook, guy	1	1	1
c	Bolts, machine, 5/8" x required length	1	1	–
d	Washers, curved, 3" x 3" x 1/4", 13/16" hole	–	–	1
c	Bolts, machine, 3/4" x required length	–	–	1
d	Washers, curved, 2 1/2" x 2 1/2" x 3/16", 11/16" hole	1	1	–

RURAL TELECOMMUNICATIONS CONSTRUCTION PRACTICES
GUY HOOK, DETAILS OF INSTALLATION

Scale: NTS

March 2001

812

Conductor Polarity Diagram For NID Incorporating Fuseless Station Protector

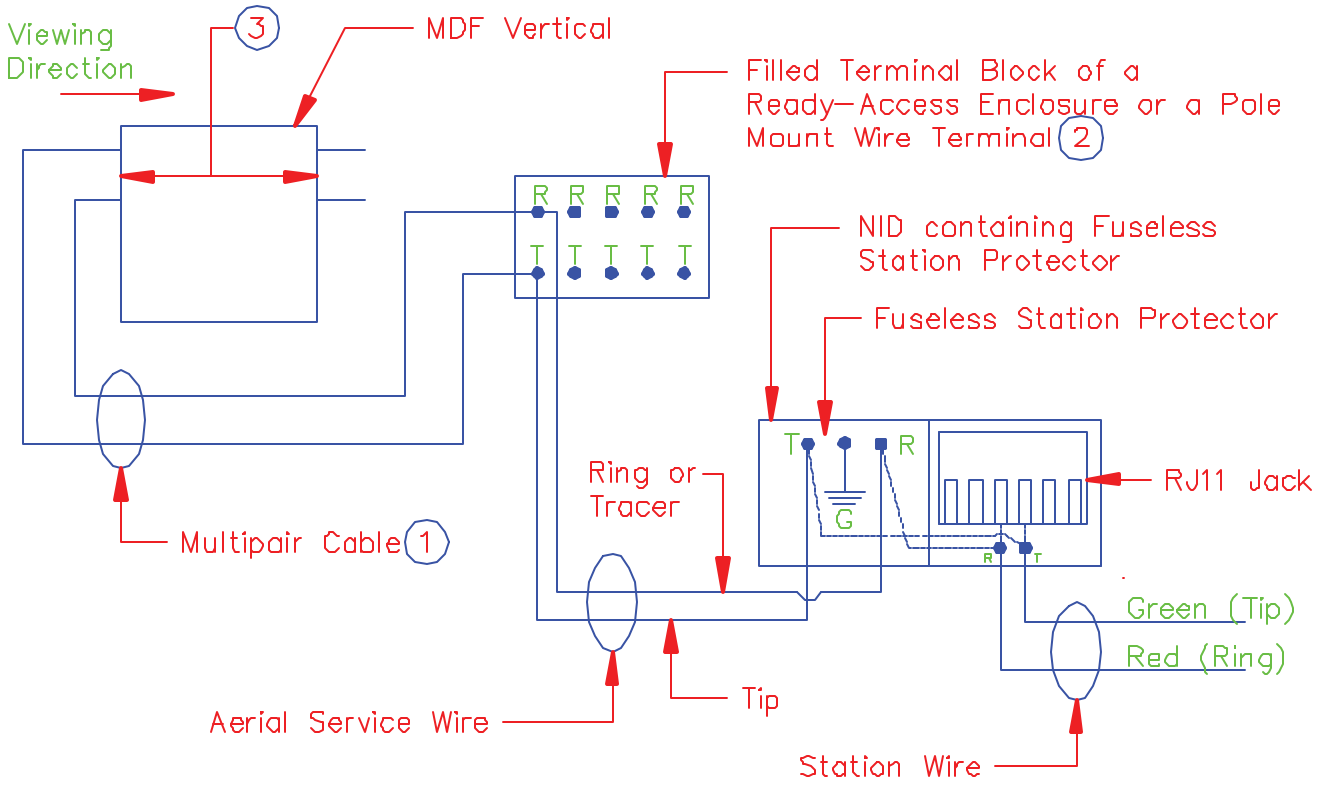

Conductor Polarity Diagram For Fused Station Protector

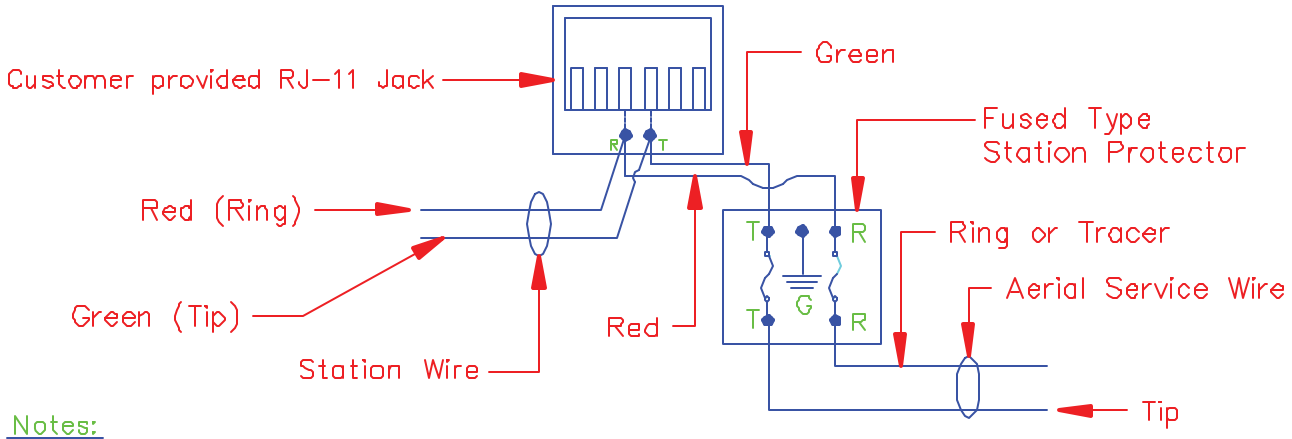

Notes:

1. Refer to appropriate cable specifications for tip and ring conductor identification.
2. When facing the cable terminal the positive (tip) is on the left and the negative (ring) is on the right side of the pair.
3. Connections to be made in accordance with the manufacturer's instructions.

	RURAL TELECOMMUNICATIONS CONSTRUCTION PRACTICES CONDUCTOR POLARITY (TIP AND RING) DIAGRAM (AERIAL PLANT)	
	Scale: NTS	March 2001
		815