QUALCOMM Incorporated

1730 Pennsylvania Ave., NW ■ Suite 850 ■ Washington, DC 20006 ■ Tel: 202.263.0020 www.qualcomm.com

February 19, 2014

Ms. Marlene Dortch
Secretary
Federal Communications Commission
445 12th Street, SW
Washington, DC 20554

Re: Expanding the Economic and Innovation Opportunities of Spectrum Through Incentive Auctions -- GN Docket No. 12-268

Dear Ms. Dortch:

QUALCOMM Incorporated ("Qualcomm") hereby responds to a January 30, 2014 *ex parte* filing from Google and Broadcom in the above-referenced docket. In the attached slides, Qualcomm demonstrates that inserting unlicensed services in the 600 MHz band — without unduly expanding the size of the guard band(s) and duplex gap (and thus violating the voluntary incentive auction statute) — will impair the adjacent mobile spectrum blocks and effectively destroy the fungibility of the licensed mobile spectrum that the Commission is working so hard to repurpose through the upcoming voluntary incentive auction.

Qualcomm explains that the Google/Broadcom filing only analyzed a single use case, *i.e.*, the adjacent channel out-of-band emissions ("OOBE") of the unlicensed device into an LTE user device, and completely overlooked the impact of blocking. Unlicensed operations in the guard band or duplex gap will block the LTE UE attempting to receive on the adjacent spectrum, unless the guard band or duplex gap is substantially enlarged and unlicensed base station power is restricted. We believe that inserting unlicensed services in the 600 MHz band would be unwise from both technical and economic perspectives, will create wide areas of interference and impair the value of the adjacent licensed spectrum, and should therefore be avoided.

Respectfully submitted,

Dean R. Brenner
Senior Vice President, Government Affairs

cc.	Gary Epstein	Paul Murray
(via email)	AJ Glusman	Jeffrey Neumann
	Chris Helzer	Louis Peraertz
	Matthew Hussey	Alan Stillwell
	Ira Keltz	Roger Sherman
	John Leibovitz	Edward Smith
	Uri Livnat	Jennifer Tomchin
	Madelaine Maior	Hugh Van Tuyl
	Geraldine Matise	Robert Weller
	Erin McGrath	

February 19, 2014

Discussion of Google / Broadcom *Ex Parte*

QUALCOMM®

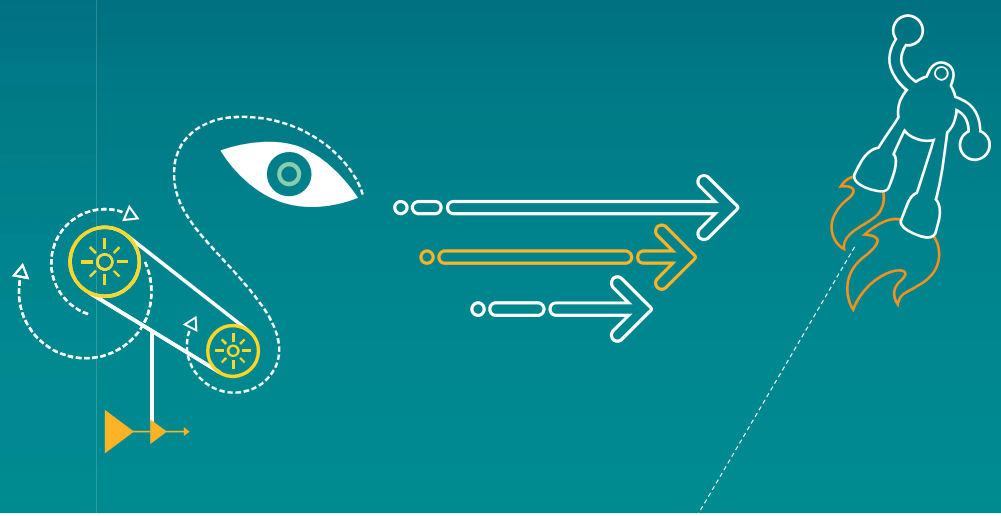

Google / Broadcom January 30, 2014 *Ex Parte*

- Broadcom only analyzed a single use case – the adjacent channel OOBE of the portable TVBD device into LTE UE – and overlooked the impact of blocking

- There are several other potentially relevant use cases
  - TVBD portable device uplink blocking of LTE UE < 7.5 MHz offset, Case 1 [1.]
  - TVBD portable device uplink device blocking LTE UE < 15 MHz offset, Case 2 [1.]
  - TVBD base station blocking of LTE UE < 7.5 MHz offset, Case 1 [1.]
  - TVBD base station blocking of LTE UE < 15 MHz offset, Case 2 [1.]

- Good electromagnetic compatibility requires a 1 m separation distance between portables and between TVBD base station and LTE UE

[1.] 3GPP T S 36.101 V11.2.0 (2012-09), Tables 7.6.1.1-1 and 1-2: In-band blocking

QUALCOMM

Potential Locations for “Guard Band Services”

- There are three potential locations for unlicensed spectrum
- The figure below depicts those potential locations in a schematic sense

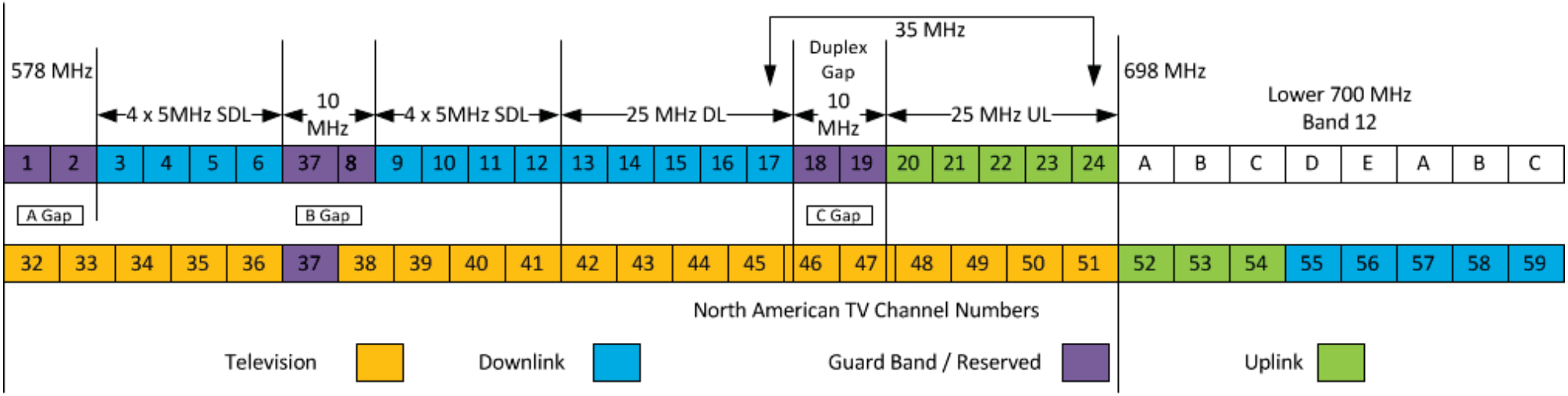

- A Gap - Between TV stations and LTE SDL
- B Gap - Associated with Channel 37 WMTS Services
- C Gap - Duplex Gap

Propagation Model for Unlicensed <–> LTE UE

- For the analysis of LTE device interference, the path loss is modeled as n=2 (free space) and then n=4
- The transition distance is defined as

$$\frac{4\,h_b h_m}{\lambda}$$

- The heights are set to 2 m and 1.5 m (UE) for unlicensed base station to UE, respectively, else 1.5 m for UE to UE
- See ITU-R 1411-2 Sec 4.1 or ITU-R P.341 for details

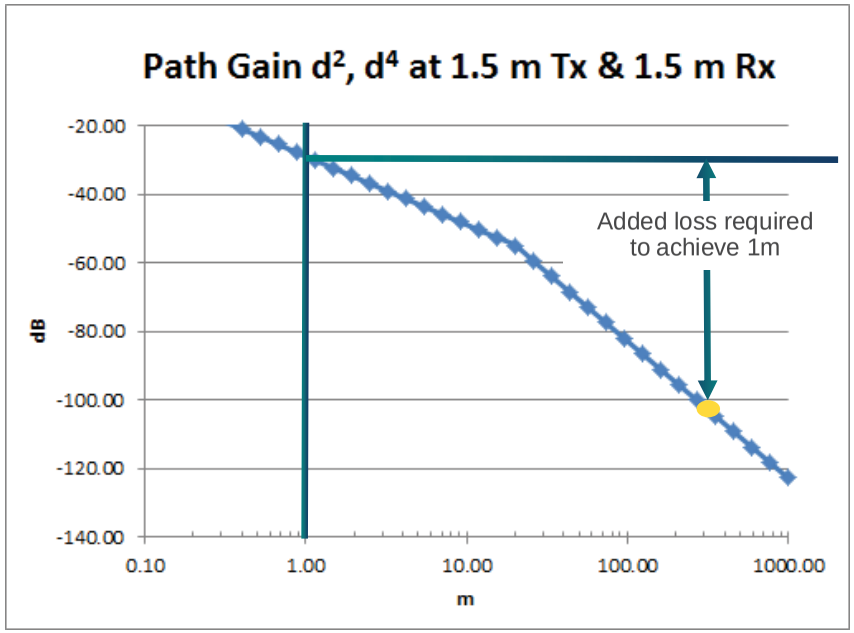

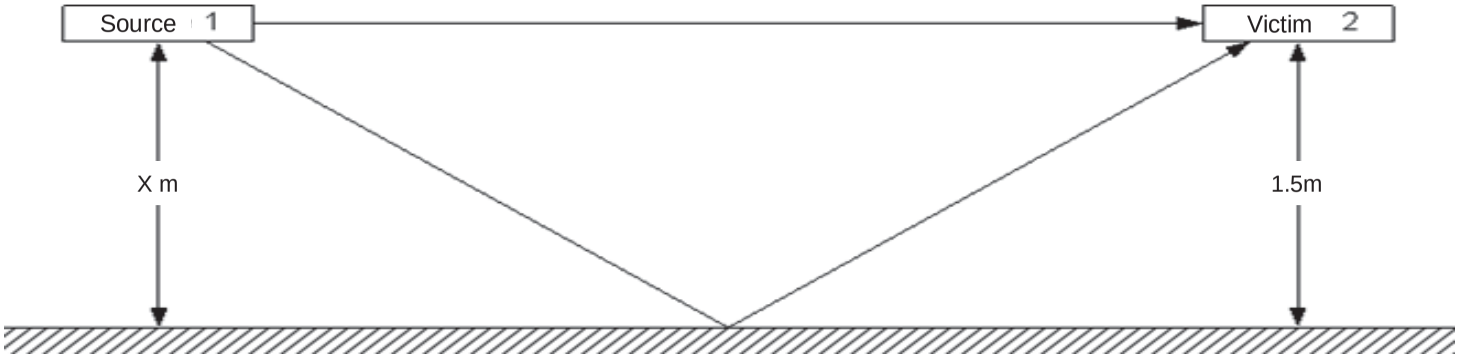

Unlicensed Base Station Block of LTE UE Case 1

- Unlicensed base station can block an LTE UE up to 138 m away
- Potentially blocked radius is defined as area with received undesired signal strength greater than that defined as blocking in the LTE specification Case 1, -56 dBm

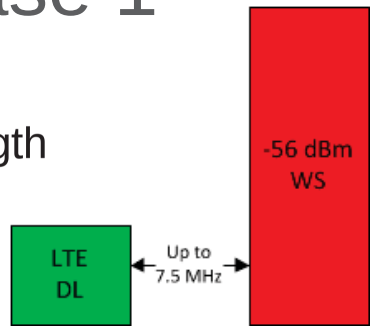

Parameter	Value	Units
Unlicensed Transmit Height	2	m
LTE UE Receive Height	1.5	m
RF Frequency	665	MHz
Unlicensed Blocking Level	-56	dBm
Unlicensed Base Station EIRP	36	dBm
UE Antenna Efficiency	-6	dB
Blocking Path Loss	86	dB
Distance to Path Loss	138	m

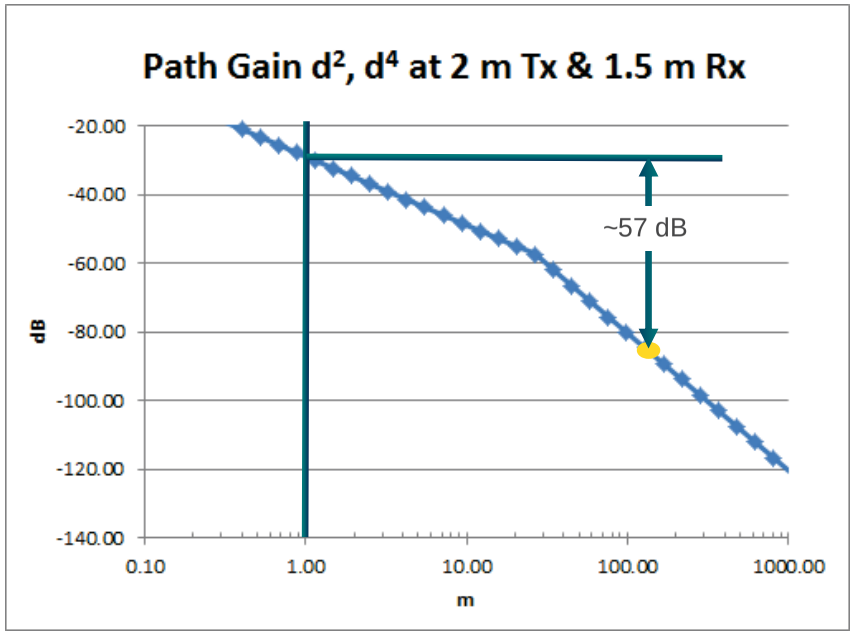

Unlicensed Base Station Block of LTE UE Case 2

- Unlicensed base station can block an LTE UE up to 69 m away
- Potentially blocked radius is defined as area with received undesired signal strength greater than that defined as blocking in the LTE specification Case 2, -44 dBm

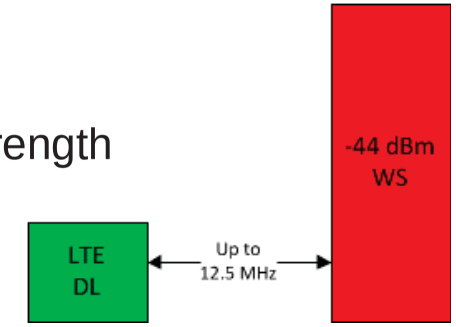

Parameter	Value	Units
Unlicensed Transmit Height	2	m
LTE UE Receive Height	1.5	m
RF Frequency	665	MHz
Unlicensed Blocking Level	-44	dBm
Unlicensed Base Station EIRP	36	dBm
UE Antenna Efficiency	-6	dB
Blocking Path Loss	74	dB
Distance to Path Loss	69	m

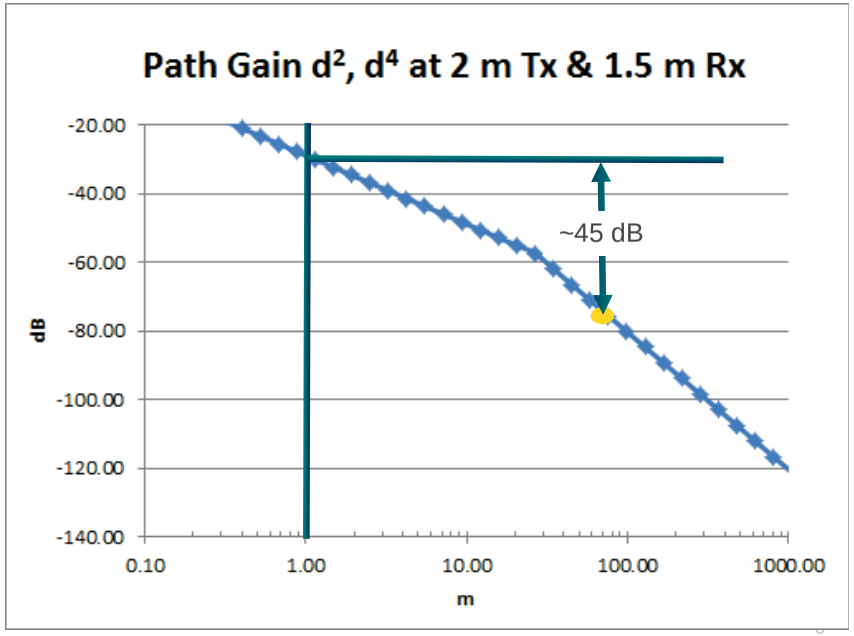

QUALCOMM

Unlicensed UE Block of LTE UE Case 1

- Unlicensed base station can block an LTE UE up to 38 m away
- Potentially blocked radius is defined as area with received undesired signal strength greater than that defined as blocking in the LTE specification Case 1, -56 dBm

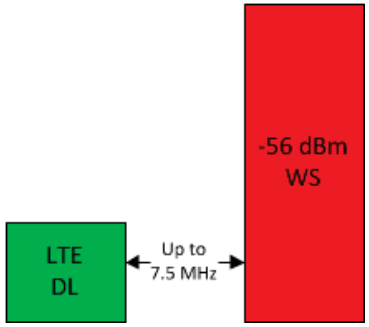

Parameter	Value	Units
Unlicensed UE Transmit Height	1.5	m
LTE UE Receive Height	1.5	m
RF Frequency	665	MHz
Case 1 Blocking Level	-56	dBm
Unlicensed UE EIRP	16	dBm
UE Antenna Efficiency	-6	dB
Blocking Path Loss	66	dB
Distance to Path Loss	38	m

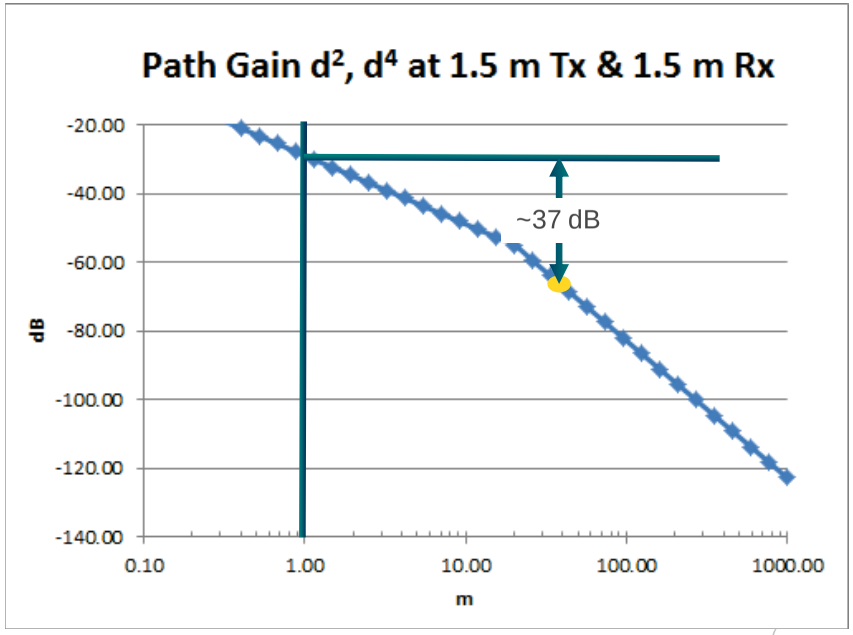

QUALCOMM

Unlicensed UE Block of LTE UE Case 2

- Unlicensed UE can block a LTE UE up to 18 m away
- Potentially blocked radius is defined as area with received undesired signal strength greater than that defined as blocking in the LTE specification Case 2, -44 dBm

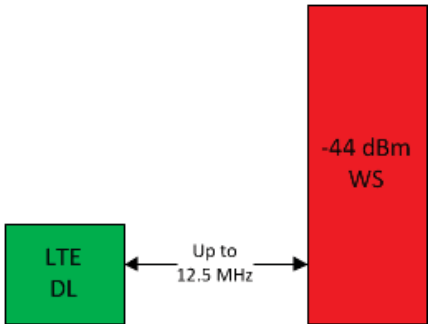

Parameter	Value	Units
Unlicensed UE Transmit Height	1.5	m
LTE UE Receive Height	1.5	m
RF Frequency	665	MHz
Case 2 Blocking Level	-44	dBm
Unlicensed UE EIRP	16	dBm
UE Antenna Efficiency	-6	dB
Blocking Path Loss	54	dB
Distance to Path Loss	18	m

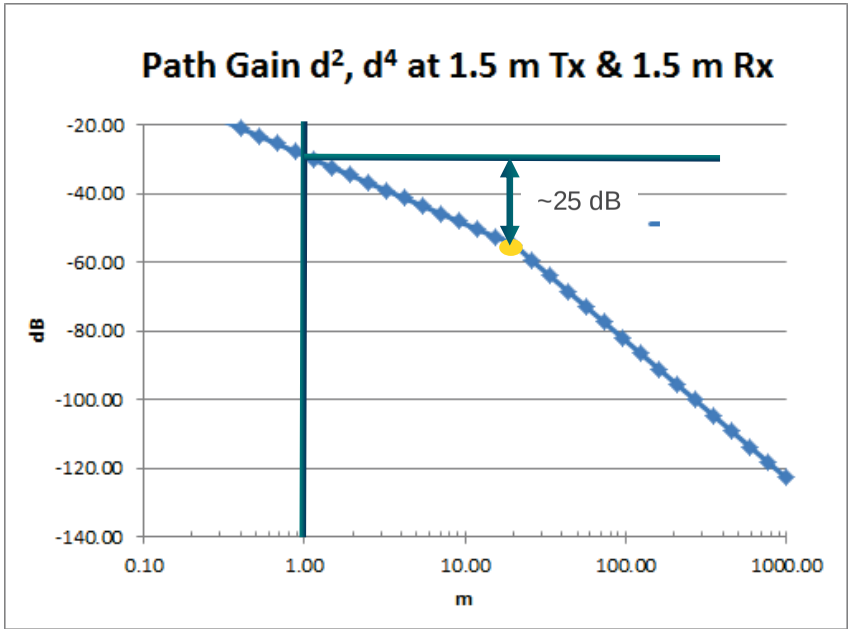

QUALCOMM

Possible Means to Address LTE Downlink Blocking

- Based on feedback from major SAW filter vendors, undesired signal attenuation capability for 25 MHz wide 600 MHz filters

Band Edge Separation	Achievable Average Loss for Unlicensed Signal
8 MHz	24 dB
10 MHz	30 dB
12 MHz	36 dB

- Applying 24 dB attenuation, and 8 MHz separation distance to Case 2 analysis
  - This is the least stringent jamming spec (-44 dBm); other use cases have more stringent spec
  - If the frequency separation is less than 7.5 MHz, the blocking requirement becomes 12 dB more difficult (-56 dBm) and even a very optimistic set of assumptions does not allow this to function

Use Case	Blocking Distance (m)
Unlicensed Base Station, +36 dBm, Case 2	11.4
Unlicensed UE, +16 dBm, Case 2	1.14

- Restricting unlicensed base stations to +16 dBm EIRP (20 dB reduction) to improve electromagnetic compatibility, still requires at least 8 MHz of separation to all LTE down links
- As a result, the minimum necessary guard band is at least 14 MHz (6 + 8 MHz)

QUALCOMM

Why 10 to 12 MHz Duplex Gap was recommended

- Duplexer technology for 600 MHz range is limited to 4% bandwidth (UL or DL); thus filter implementation with max ~25 MHz bandwidth is expected, regardless of final band plan
- For such filters, it takes a minimum 10 MHz duplex gap (the C gap on slide 3) to get acceptable duplexer isolation, and 12 MHz duplex gap to fully optimize insertion loss
- In addition, antenna bandwidth feasibility limits 600 MHz band plans to no more than ~10% bandwidth (UL + DL end to end). This also implies a duplex gap of ~10 MHz for the 25 MHz or 35 MHz FDD plans under consideration

Implication of Wi-Fi in Duplex Gap

- If Wi-Fi operations are permitted in the duplex gap, then the Wi-Fi transmit plus LTE Uplink can create an IM3 product that falls in LTE downlink band
- To avoid this issue completely, for a 2 x 35 MHz FDD plan, when a 6 MHz Wi-Fi channel is placed immediately below the UL, the duplex gap would have to be 47 MHz wide to move the IM3 product out of the downlink band
  - This configuration cannot be supported by known filter or antenna technologies

Summary

- At least 8 MHz separation between the band edge of unlicensed services and that of the LTE downlink is required to prevent blocking of the LTE UE, so the guard band must be at least 14 MHz wide (6+8 MHz)
- In addition to necessitating a wider guard band, a substantial power restriction (20 dB) on unlicensed base stations is required to prevent blocking by the unlicensed services
- Attempting to insert as little as 6 MHz of unlicensed spectrum in a guard band at 600 MHz can require 22 MHz of total guard band (2 x 8 + 6 MHz), if the guard band (the B gap) is in between two LTE DL blocks
- The required guard band between LTE downlink and broadcast TV (the A gap) – with no unlicensed operations – is 10 MHz
- Inserting unlicensed service into the duplex gap (the C gap) requires a minimum guard band of 47 MHz for a 2 x 35 MHz FDD band plan

Summary (Cont'd)

- Inserting unlicensed services in the 600 MHz band – without unduly expanding the size of the guard band(s) and duplex gap in violation of the statute – will impair the adjacent mobile spectrum blocks and thus destroy the fungibility of the mobile spectrum
- Inserting unlicensed service(s) in the 600 MHz band (without enlarging the guard band(s) and duplex gap) creates wide areas of spectrum interference to other services and impairs the value of the adjacent licensed spectrum
- Inserting unlicensed services in the 600 MHz band is a poor choice from both technical and economic perspectives and is strongly counter recommended
- To the extent anything is placed in the guard band or duplex gap, wireless microphones and WMTS are preferable, because their operations can be limited to certain geographic areas
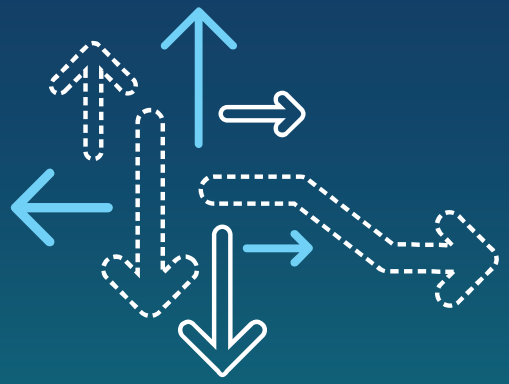
Thank You