BROADCOM CORPORATION
5300 California Avenue
Irvine, CA 92617
Phone: 949-926-5000
Fax: 949-926-5203

March 3, 2014

VIA ELECTRONIC FILING

Ms. Marlene Dortch
Secretary
Federal Communications Commission
445 12th Street, SW
Washington, DC 20554

Re: Expanding the Economic and Innovation Opportunities of Spectrum Through Incentive Auctions -- GN Docket No. 12-268

Dear Ms. Dortch:

This letter responds to the materials filed by QUALCOMM Incorporated ("Qualcomm") on February 19, 2014.

Qualcomm wrongly asserts that the January 30, 2014 *ex parte* notice filed by Broadcom Corporation ("Broadcom") only analyzed a single use case and overlooked the impact of blocking. As noted in that filing, Broadcom considered LTE adjacent channel rejection (adjacent channel selectivity and in band blocking), but found that out-of-band emissions ("OOBE") constitute the dominant factor with respect to Wi-Fi interference into LTE.[1]

Broadcom's analysis was based on Broadcom products that exceed the 3GPP specifications used in Qualcomm's analysis. We expect this to be the case with other manufacturers as well because field deployments and testing by operators typically require better blocking performance (see "LTE Blocking Analysis" in the Appendix). As such, Qualcomm's response does not address or refute Broadcom's findings with respect to the viability of 802.11af devices operating at 40-100 mW transmit power in a technically reasonably sized guard band and duplex gap (*e.g.*, 10-12 MHz).

Notably, Qualcomm agrees that with proper implementation, a TVWS device could operate at a certain gap from LTE.[2] Although Broadcom agrees conceptually with this, we take issue with the underlying assumptions that led to Qualcomm's conclusion that the minimum necessary guard band is 14 MHz.

---

[1] *See* Notice of *Ex Parte* by Google Inc. and Broadcom Corporation, at 16 (Jan. 30, 2014) ("To assess real world performance we studied the adjacent channel rejection performance of an LTE product and the OOBE of a WiFi design conforming to FCC TVWS regulations….After analyzing both factors, we concluded that a LTE receiver becomes impacted first by in-band noise due to OOBE before being impacted by the adjacent channel signal power.").

[2] *See* Qualcomm Inc. Letter, at 10 (February 19, 2014).

As a global leader in wired and wireless communication using licensed and unlicensed spectrum, Broadcom believes it is vital that the FCC regulate in a manner that is consistent with technological advancements (and not on standards that are published and soon exceeded in a real world environment) to ensure that all of this public resource is fully used.

We look forward to working with the Commission should it have any questions with respect to this filing.

Sincerely,

/s/ Jennifer K. Bush
Associate General Counsel

CC via email:

Gary Epstein
AJ Glusman
Chris Helzer
Matthew Hussey
Ira Keltz
John Leibovitz
Uri Livnat
Madelaine Maior
Geraldine Matise
Erin McGrath
Paul Murray
Jeffrey Neumann
Louis Peraertz
Alan Stillwell
Roger Sherman
Edward Smith
Jennifer Tomchin
Hugh Van Tuyl
Robert Weller

BROADCOM CORPORATION
LTE BLOCKING ANALYSIS

March 3, 2014

© 2014 Broadcom Corporation. All rights reserved.

ANALYSIS OF ADJACENT CHANNELS REJECTION

- **In preparation for our January 30th filing we analyzed the adjacent channel rejection (adjacent channel selection(1) and in-band blocking(2)) and concluded that this is not the dominant factor irrespective of the separation gap between WiFi and LTE.**
- **Two factors contribute to this conclusion:**
  - LTE device performance that currently exceeds 3GPP specifications - products expected to provide at least 10dB improved adjacent channel rejection ability without compromising receiver sensitivity; and
  - SAW filters/duplexers that attenuate out-of-band signals such as WiFi and TV.
- **In the following slides, we provide two examples from our analysis that demonstrate that LTE devices enjoy significant blocking margin when assuming that WiFi EIRP values are determined by OOBE.**

(1) **3GPP 36.101 table 7.5.1-2 ACS case 1**

(2) **3GPP 36.101 table 7.6.1.1-1, 7.6.1.1-2 in band blocking**

© 2014 Broadcom Corporation. All rights reserved.

TYPICAL LTE DEVICE BLOCKER HANDLING

- **Field deployments and testing by operators typically require significantly better adjacent channel selectivity and in-band blocking capability than is specified by 3GPP. LTE devices are built to meet those requirements including strong out-of-band and strong in-band signals from adjacent channel operators' nearby high power base stations (>1kW ERP).**
- **The following table shows examples of US operators requirements in the 700MHz spectrum exceeding 3GPP 36.101 ACS, in-band and out-of-band Blocking:**

	From 2 US Operators *	3GPP 36.101
ACS Applicability (0MHz to 1MHz Gap)	-44dBm LTE Blocker at 0.5MHz gap (within the Rx Band)	-51.5dBm LTE Blocker at 0MHz Gap
	-35dBm ATSC Blocker at 1MHz gap from the Band Edge	
In-Band Blocking (5MHz Gap)	-44dBm LTE Blocker at 6.5MHz gap (within the Rx Band) **	-56dBm LTE Blocker at 5MHz Gap
Out-of-Band Blocking (15MHz to 60MHz Gap)	-15dBm ATSC Blocker at 18MHz gap from the Band Edge	-44dBm CW Blocker between 15MHz & 60MHz from the Band Edge
	-30dBm CW Blocker at 13MHz gap from the Band Edge	

- **In summary:**
  - Operators' ACS is required to be 10.5dB higher than 3GPP ACS spec;
  - Operators' in-band Blocking is required to be 7dB higher than 3GPP in-band blocking spec; and
  - Operators' out-of-band Blocking is required to be 32dB higher than 3GPP out-of-band blocking spec.
- **Hence, in the following analysis, we conservatively assume LTE devices to have 10dB better blocking performance than 3GPP 36.101.**

* For all operator tests, unless otherwise noted, the desired signal is set 3dB lower than for 3GPP tests.

** Desired signal set 5dB higher than 3GPP test.

© 2014 Broadcom Corporation. All rights reserved.

REMINDER - OUR JANUARY 30TH ANALYSIS

- **In subsequent slides we analyze an example of 48dB attenuation between WiFi and LTE devices operating at 2m of separation as demonstrated in the table below .**

Frequency	665MHz	
LTE device to WiFi device distance	2m	3m
Free space loss	35dB	38.5dB
Body loss	3dB	
Antenna polarization mismatch	2dB	
Shadowing	3dB	
LTE antenna Gain	-5dB	
Total propagation Loss	48dB	51.5dB
LTE noise level	-101.5dBm	
Interference level 3dB higher	-98.5dBm	
Allowed WiFi noise level into LTE band	-50.5dBm	-47dBm

- **In subsequent slides we analyze two cases – 0MHz and 4MHz – the resulting WiFi EIRP based on OOBE is 7.6dBm and 15.3dBm respectively.**

Integrated OOBE into LTE 4.5MHz BW and resulting allowed WiFi EIRP			
LTE device to WiFi device distance		2m	3m
WiFi 6MHz to LTE 5MHz channels gap	Integrated WiFi OOBE into LTE	Maximum WiFi EIRP	
0MHz	-58.2dBr	7.6dBm	11.1dBm
1MHz	-60.2dBr	9.6dBm	13.1dBm
2MHz	-62.5dBr	11.9dBm	15.4dBm
3MHz	-64.3dBr	13.7dBm	17.2dBm
4MHz	-65.9dBr	15.3dBm	18.8dBm
6MHz	-69.2dBr	18.6dBm	22.1dBm

© 2014 Broadcom Corporation. All rights reserved.

SAW FILTER ASSUMPTIONS

- **Filter assumptions are shown below and are based on a leading SAW filter vendor.**
  - Conservative – yellow line.
  - Typical – B20 red line.

ANT-Rx filter attenuation of leading SAW vendor B12 Duplexer: 13MHz duplex gap (699-716MHz UL, 729-746MHz DL).
ANT-Rx filter attenuation of leading SAW vendor B20 Duplexer: 11MHz duplex gap (791-821MHz DL, 832-862MHz UL).

Conservative ANT-Rx filter assumption: 30dB Att. at 10MHz from band bdge.
Typical ANT-Rx filter assumption: B20 Duplexer typical attenuation was used.

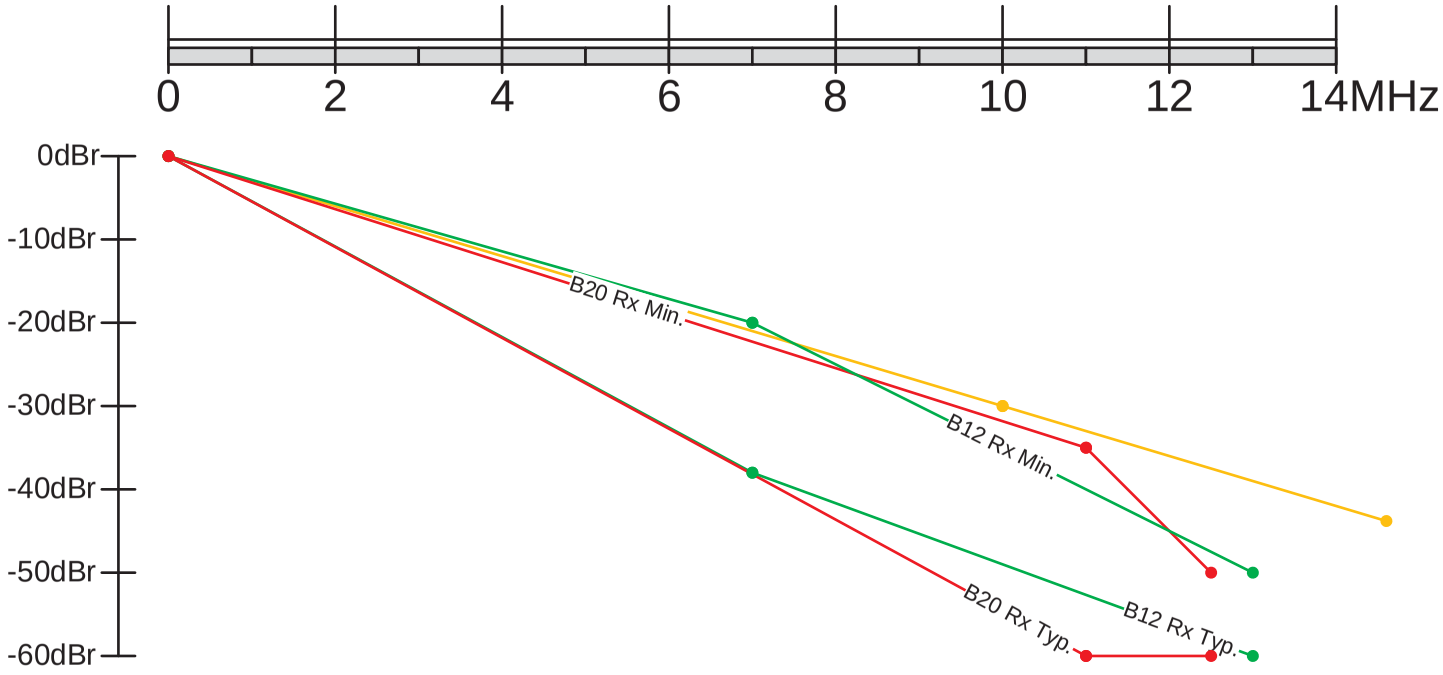

- **The average attenuation across a 5MHz WiFi signal bandwidth is calculated based on the WiFi to LTE separation gap and shown in the following analysis.**

© 2014 Broadcom Corporation. All rights reserved.

ACS

- **3GPP specifies -51.5dBm as the required ACS threshold for signals adjacent to LTE. This, coupled with our assumption from slide 3 leads to a device ACS capability of -41.5dBm.**
- **The bottom row shows that:**
  - With a conservative filter assumption: There is 5.9dB ACS margin relative to OOBE-based EIRP limits; and
  - With a typical filter assumption: There is 9.6dB ACS margin relative to OOBE-based EIRP limits.

WiFi to LTE channel gap	0MHz
Total path loss assumed @ 2m	48dB
Allowed WiFi EIRP	7.6dBm
WiFi signal at LTE device antenna connector	-40.4dBm
Average filter attenuation [Conservative Typical]	[7 10.7]dB
WiFi signal power after filter [Conservative Typical]	[-47.4 -51.1]dBm
LTE device performance threshold	-41.5dBm
Margin relative to LTE device [Conservative Typical]	[5.9 9.6]dB

© 2014 Broadcom Corporation. All rights reserved.

IN-BAND BLOCKING

- **3GPP specifies -56dBm as the required blocking threshold at 5MHz separation. Our analysis here assumes 4MHz separation; to compensate for the 1MHz difference we estimate 1-2dB difference relative to the specification and use the value -58dBm threshold. This, coupled with our assumption from slide 3 leads to a device blocking capability of -48dBm.**
- **The bottom row shows that:**
  - With a conservative filter assumption: There is 3.7dB Blocking margin relative to OOBE-based EIRP limits; and
  - With a typical filter assumption: There is 17.2dB Blocking margin relative to OOBE-based EIRP limits.

WiFi to LTE channel gap	4MHz
Total path loss assumed @ 2m	48dB
Allowed WiFi EIRP	15.3dBm
WiFi signal at LTE device antenna connector	-32.7dBm
Average filter attenuation [Conservative Typical]	[19 32.5]dB
WiFi signal power after filter [Conservative Typical]	[-51.7 -65.2]dBm
LTE device performance threshold	-48dBm
Margin relative to LTE device [Conservative Typical]	[3.7 17.2]dB

© 2014 Broadcom Corporation. All rights reserved.

IM3 ISSUES

- **We have tested the case where a WiFi signal and LTE UL signal create a 3rd order inter-modulation product falling into the LTE DL channel, as shown in the 600 MHz band plan scenario below.**

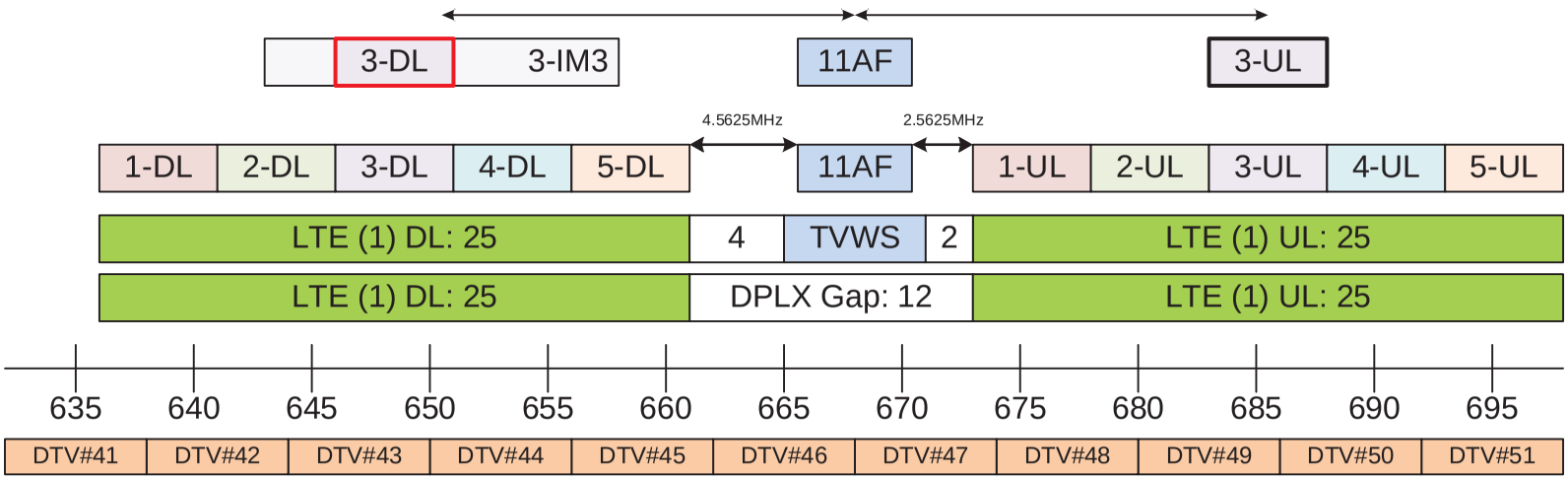

- **The test was performed in a very similar LTE Band 20, which leads to nearly identical attenuation slope in the duplex gap for both bands:**
  - DL spectrum below UL spectrum for both bands;
  - Rx filters fractional BW nearly identical at 3.8%; and
  - 11MHz Duplex Gap in B20.
- **The test was performed according to 3GPP in-band blocking test procedures but with the LTE UL signal set at max power (23dBm, QPSK, 25RB). The test passed with WiFi signal levels above -10dBm at the LTE device antenna connector.**
- **We conclude that IM3 issues are, by a wide margin, not the dominant factor since the WiFi OOBE-based limit of -33dBm is much lower (see previous slide).**

© 2014 Broadcom Corporation. All rights reserved.

CONCLUSIONS

- **Field deployments of LTE systems present high levels of in-band and out-of-band interference. Devices are designed to operate in such environments.**
- **Hence, operation of low power (<100mW) WiFi in the guard band and duplex gap is not fundamentally different than adjacent channel interference from cellular or other systems and doesn't destroy the fungibility of the LTE spectrum.**
- **Moreover, the received signal power from WiFi as shown on slides 6 and 7 is easily within the range of the expected adjacent channel LTE interference.**
- **The strict TVWS OOBE requirement (-47dBm/MHz in the adjacent channel of a 40 mW class device) renders OOBE to be the limiting factor of the interference analysis.**
  - As noted in our January 30th filing, devices that meet this requirement will have further reduced OOBE at 4MHz gap.

© 2014 Broadcom Corporation. All rights reserved.