1200 G Street, NW
Suite 500
Washington, DC 20005

P: 202-628-6380
F: 202-393-5453
W: www.atis.org

ATIS Board Officers

Chair
Stephen Bye
Sprint

First Vice Chair
Marian Croak
AT&T

Second Vice Chair
Thomas Sawanobori
Verizon

Treasurer
Joseph Hanley
Telephone and Data Systems

President & Chief Executive Officer
Susan M. Miller
ATIS

March 13, 2014

Via Email
Marlene H. Dortch
Secretary
Federal Communications Commission
445 12th Street, S.W.
Washington, D.C. 20554

Re: *Ex Parte*, GN Docket No. 13-5, WC Docket No. 12-353

Dear Ms. Dortch:

On March 11, 2014, representatives from the Alliance for Telecommunications Industry Solutions (ATIS) and the SIP Forum met with Priscilla Argeris, Legal Advisor to Commissioner Jessica Rosenworcel.

The purpose of the meeting was to discuss the joint ATIS-SIP Forum work to develop a detailed specification related to IP network-to-network interconnection (NNI). The written presentation discussed during the meeting is attached hereto.

In attendance at this meeting were: Susan Miller, ATIS President and CEO; Richard Shockey, Chairman of the Board of Directors of the SIP Forum; Andrew White, ATIS Vice President of Technology and Standards; and Thomas Goode, ATIS General Counsel.

A copy of this letter is being submitted on the record in the above-referenced dockets. If there are any questions, please contact the undersigned.

Sincerely,

Thomas Goode
ATIS General Counsel

cc: Priscilla Argeris, Legal Advisor to Commissioner Rosenworcel

Enabling the All-IP Transition

March 11, 2014

The IP-NNI Initiative

In December 2013, the Alliance for Telecommunications Industry Solutions (ATIS) and the SIP Forum launched a joint task force to develop detailed specification of IP-NNI (Network-to-Network Interface) for all North American Service Providers.

- ATIS is a global standards development organization that develops technical and operations standards for information, entertainment, and communications technologies.
- ATIS' Packet Technology and Systems Committee (PTSC) develops standards and technical reports related to services, architectures, and signaling, including IP Interconnection.
- The SIP Forum advances the adoption of products and services based on the Session Initiation Protocol (SIP), and maintains and serves a global community of commercial SIP-based service and technology providers.

It started with one service.

Standard User Interface + Common Platform = Global Communications

- Uniform addressing plan
- Single, automated user interface
- Attach anywhere, call anybody
- On demand, scalable

Then it got more complicated.

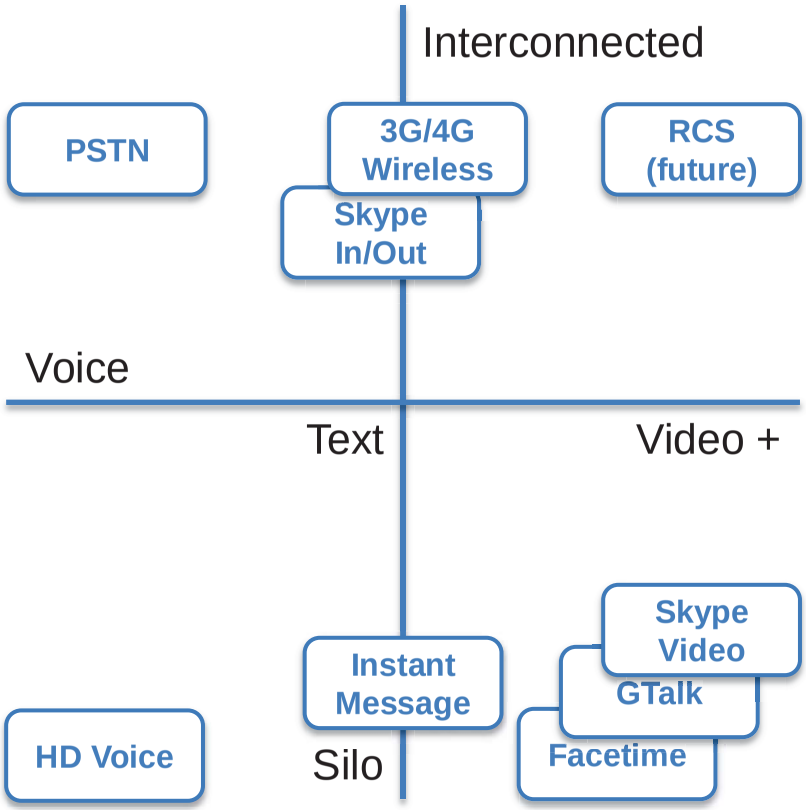

- Available services have evolved from the PSTN.
  - Text, Video, and Multimedia
  - Available in Silos
- Interoperable services are limited to voice and text.
- Technologies such as Rich Communications Services (RCS) promise interoperable evolution.
- Work is required to gain consensus on implementation.
  - Web
  - Wireline
  - Wireless

Business agreement is required on interconnection and interoperability.

ATIS Program for Transition to All-IP

Executive Leadership and Engagement

- ATIS Board of Directors
- Technology and Operations Council

Architecture and Services

- Wireless, Fixed, and Cable Architecture and Interconnection
- Emergency Services including Multimedia and SMS
- Lawful Intercept
- Communications APIs

Information Infrastructure

- Telephone Numbering Evolution
- SMS/800 Number Administration and Evolution
- Inter-provider Ordering and Billing
- Inventory Management

Operational Excellence

- Next Generation Interconnection and Interoperability
- Network Reliability in conjunction with FCC Network Outage Reporting System
- Synchronization

SIP Forum Program

Task Force

- ATIS/SIP Forum IP-NNI Joint Task Force (100+ current participants)

Task Groups

- Fax-over-IP [FoIP] Task Group
- SIPconnect Task Group
- SIPconnect Interoperability Certification [SC-IT] Task Group
- SIP Over IPv6 [IPv6] Task Group
- User Agent Configuration [UA-Config] Task Group
- Video Relay Services [VRS] Task Group (created specifically at the request of the FCC CTO)
- WebRTC Task Group

Events

- SIPit, SIPconnect-IT and RTCWeb-it Interop Testing Events
- SIPNOC “SIP Network Operator’s Conference”

IP-NNI Initiative

- Through this initiative, ATIS and the SIP Forum will jointly develop a detailed specification that promotes communications interoperability and addresses key industry challenges.
  - Accelerate standards-based IP interconnection.
    - IP interconnection is slowed by unique bilateral agreements that lack the efficiencies gained by industry standardization.
  - Address differences in how SIP works “on the wire” that have been exposed by deployment experience.
    - Every instance of IP interconnection is a one-off, requiring a detailed engineering analysis and often involving “protocol normalization” between service providers.
  - Agree to methodology to translate E.164 numbers for SIP routing data.

IP-NNI Initiative

- The initiative will allow the industry to continue to support key principles:
  - Universal connectivity to next generation broadband networks and services;
  - The protection of consumers, including safeguards against fraudulent, deceptive and unfair business practices;
  - Uninterrupted, seamless access to public safety, national security, emergency preparedness/response services;
  - Continued network reliability and robustness; and
  - The facilitation of competition and innovation.

Leaders, Membership and Process

- The initiative is co-lead by:
  - Martin Dolly, AT&T
  - Chris Wendt, Comcast
  - John Barnhill, GENBAND
- The initiative is open to members of ATIS and the SIP Forum.
- There is broad industry participation from wireline providers (LECs, cable and broadband), wireless providers, and vendors.
- Work is being completed through face-to-face and virtual meetings with decisions being made via consensus.

What is Network Interconnection?

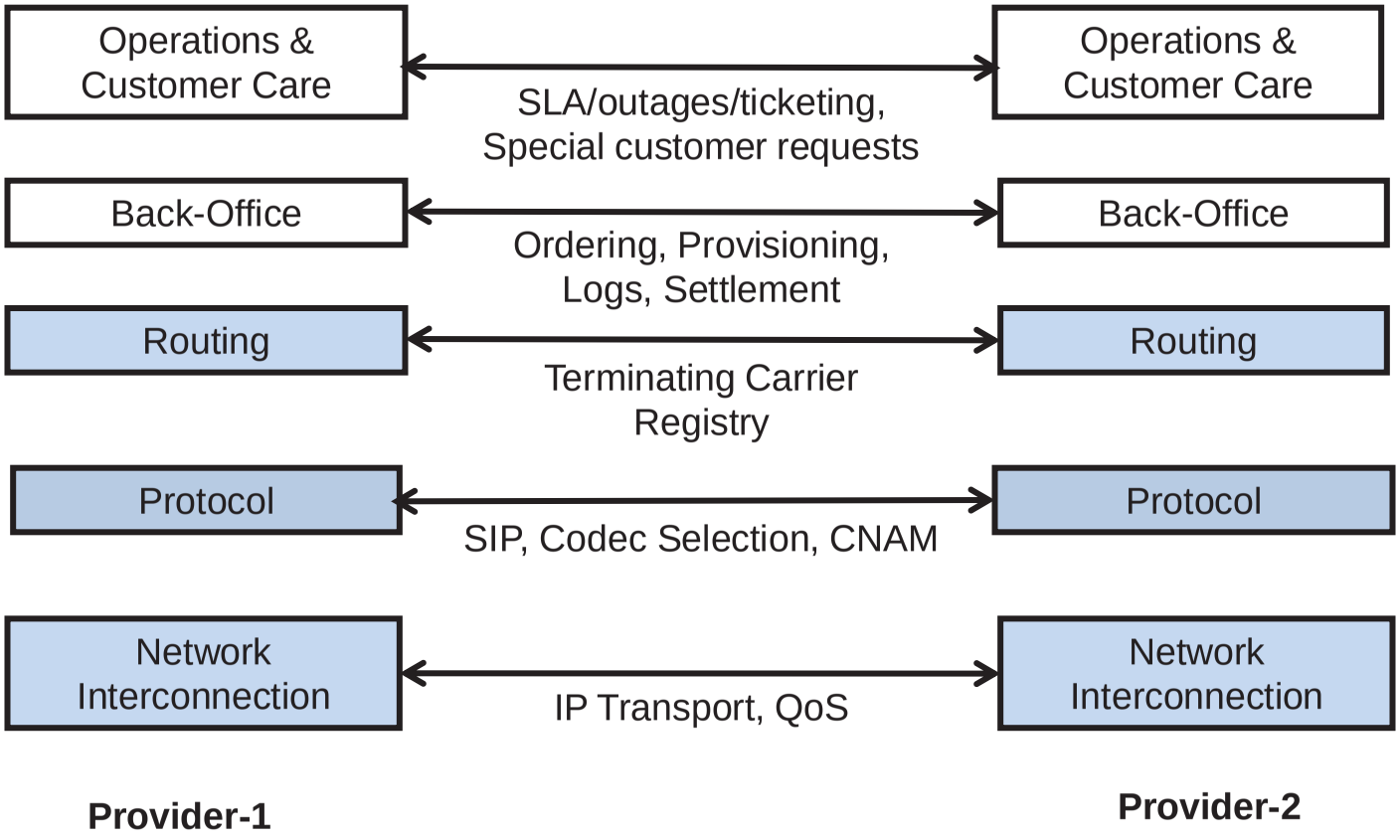

The ATIS and SIP Forum collaboration focuses on SIP protocol interoperability.

Scope: Protocol

- Define reference architecture with functional entities necessary for IP-based interconnection.
- Provide exact specification for all protocols at the NNI:
  - SIP options that MUST be supported;
  - SIP options that SHOULD be supported;
  - Limit protocol options where necessary for interoperability; and
  - Provide additional detail to resolve ambiguity.
- Specify methods for negotiating protocols, protocol extensions, and exchanging capability information between carriers.
  - Specify consensus methods of formulating SIP protocol messages where multiple options exist in standards.
- Specify the exact presentations of Fully Qualified Domain Names in “From:”, “To:” and “PAI” fields.

Scope: Routing

- Define the architecture for a shared “Thin” Registry(s) of NNI interconnection data.
  - Determine if/how Infrastructure ENUM is used.
- Specify a mechanism for using the shared registry(s) to identify the terminating carrier of record.
- For IP-originated calls, specify the preferred header for Calling Name (CNAM) data, and specify how that data is presented to the terminating proxy (*i.e.*, format, syntax and processing of such data).
  - The expectation is that the signaling of CNAM would not survive interworking to SS7.

Proposed Milestones

Dec	2013:	Kick-Off Meeting.
March	2014:	Goals and Requirements for NNI Architecture.
June	2014:	Initial Readout on Progress on Routing Framework and IP Interconnect Protocol.
Feb	2015:	Network-to-Network Interface Profile.

Conclusion

- The complex transition to the All-IP Network needs to accelerate.
- Many standards exist, but companies must agree on an interoperable implementation.
- Through this initiative, ATIS and the SIP Forum are developing detailed specifications that define the protocol implementation.
- ATIS and SIP Forum look forward to working with the Commission to facilitate the transition to an All-IP Network.

Questions

Susan Miller
President and CEO
ATIS
smiller@atis.org

Richard Shockey
Chairman of the Board of Directors
SIP Forum
richard@shockey.us

Andrew White
Vice President of Technology and Standards
ATIS
awhite@atis.org

For more information about ATIS, please visit: www.atis.org.
For more information about SIP Forum, please visit: http://www.sipforum.org.

Supplementary Material

SIP Forum Background

- Founded in 2000
- Non-Profit IP Communications Industry Association
- Membership ranks include:
  - Corporate “Full Members” that pay annual dues and support the work of the Forum
  - Academic Institutions and Research Orgs
  - Individual “Participant” Members (>15K)

SIP FORUM

SIP FORUM Full Member Companies

(as of 1-23-2014)

Alcatel·Lucent
Broadvox EXPERIENCE MATTERS.
ERICSSON
Polycom
Sorenson Communications
aspect
CableLabs
GENBAND
ROGERS
TalkTalk Business
CBEYOND
AVAYA
HUAWEI
Sagemcom
TECNOTREE
CISCO
bandwidth.com Complete business communications
Microsoft
SAMSUNG
telecom
Bell
comcast
snom VoIP phones
MITEL
UNIFY
COX
BROADSOFT Innovation calling.
Broadview NETWORKS
edgewater NETWORKS
NOKIA CONNECTING PEOPLE
Sonus NETWORKS
iol

SIP Forum Academic/Institutional Members

Columbia University:

The Fu Foundation
School of Engineering & Applied Science

FOKUS
Fraunhofer Institute for Open Communication Systems

TEXAS A&M UNIVERSITY

ILLINOIS INSTITUTE OF TECHNOLOGY

University of Glamorgan
because great minds don't think alike

Georgetown UNIVERSITY est. 1789

Gradiant

Copyright © 2014 SIP Forum

ATIS' INDUSTRY MEMBERSHIP

ADTRAN
Alcatel·Lucent
APPLIED COMMUNICATION SCIENCES
at&t
Bell
BlackBerry
BROCADE
bright house NETWORKS
CenturyLink
ciena
CISCO
c spire wireless
COX
dish NETWORK
EarthLink BUSINESS
ERICSSON
FairPoint communications
FUJITSU
HARRIS
Hawaiian Telcom
HITACHI Inspire the Next
hp invent
intel
INdigital telecom
JUNIPER NETWORKS
LG
Microsoft
MOTOROLA SOLUTIONS
MVT internet
neustar
nii
Nokia Siemens Networks
PMC PMC-SIERRA
QUALCOMM
ROGERS
SAMSUNG
Sprint
SouthernLINC Wireless
Symmetricom
Syniverse
TDS
T-Mobile
TELUS
Time Warner Cable
Underwriters Laboratories
verizon
WestCarolinaTel YOUR COMMUNICATIONS COOPERATIVE

atis