SIDLEY AUSTIN LLP
SIDLEY

SIDLEY AUSTIN LLP
1501 K STREET, N.W.
WASHINGTON, D.C. 20005
(202) 736 8000
(202) 736 8711 FAX

BEIJING
BOSTON
BRUSSELS
CHICAGO
DALLAS
FRANKFURT
GENEVA
HONG KONG
HOUSTON
LONDON
LOS ANGELES
NEW YORK
PALO ALTO
SAN FRANCISCO
SHANGHAI
SINGAPORE
SYDNEY
TOKYO
WASHINGTON, D.C.

dlawson@sidley.com
(202) 736 8088

FOUNDED 1866

March 14, 2014

Via Electronic Filing

Marlene Dortch, Secretary
Federal Communications Commission
445 12th Street, S.W.
Washington, D.C. 20554

Re: *Policies Regarding Mobile Spectrum Holdings*, WT Docket No. 12-269

Dear Ms. Dortch:

Various parties to this proceeding – most recently Sprint[1] – have proposed some form of frequency-biased spectrum screen, in which the Commission would count lower-frequency spectrum more heavily than (or separately from) higher-frequency spectrum. AT&T and others have previously shown that these proposals are fundamentally and irredeemably flawed and that any frequency-weighted (or separate low-frequency) screen would be unlawful. AT&T now submits two new expert reports that further demonstrate that there is no economic, engineering, factual or logical basis for a screen that discriminates on the basis of frequency.[2]

First, the whole concept of a screen weighted by deployment costs is incompatible with basic principles of economics. The argument underlying all of these proposals is the same: lower-frequency spectrum is more valuable because its propagation and building penetration characteristics support larger maximum cell sizes and thus deployment requires fewer base stations and lower cost. As Drs. Katz, Haile, Israel and Lerner explain, even if it were always true that high-frequency spectrum costs much more to deploy, expected deployment costs, like other factors that affect value, are reflected in spectrum costs: if some spectrum is less valuable because it will cost more to deploy, then, all else equal, it will sell for less. Because an operator's competitiveness turns on *total* cost – spectrum plus deployment cost – there is no

[1] *See* Letter and Report from Lawrence R. Krevor, Vice President for Legal and Government Affairs, Sprint, to Marlene H. Dortch, Secretary, Federal Communications Commission (Feb. 11, 2014) ("*Sprint 2/11/14 Ex Parte*").

[2] *See* Michael L. Katz, Philip A. Haile, Mark A. Israel, and Andres V. Lerner, "Sprint's Proposed Weighted Spectrum Screen Defies Economic Logic and Is Inconsistent with Established Facts" (March 13, 2014) ("Katz/Haile/Israel/Lerner Decl.") (attached); Jeffrey H. Reed and Nishith D. Tripathi, "The Value Of Spectrum: A Response To Dr. Kostas Liopiros' Paper" (March 13, 2014) (Reed/Tripathi Decl.") (attached).

Sidley Austin LLP is a limited liability partnership practicing in affiliation with other Sidley Austin partnerships

rational basis for attempting to capture the competitive impact of different bands of spectrum by focusing only on deployment costs, and once all of the relevant costs are counted, there is simply no basis for the proposition that high-frequency spectrum is always worse for competitive entry and expansion than low-frequency spectrum.[3] Sprint's latest proposal, like the other deployment cost-based proposals, "acts as if spectrum rights were free," "ignores the power of markets in determining equilibrium prices," and has "no defensible economic basis."[4]

Second, as Drs. Reed and Tripathi explain, maximum propagation distances are not the only, or even necessarily the most important, determinant of spectrum "value," and there are a number of other factors that cut in favor of high-frequency spectrum. These include: (1) higher-frequency spectrum is typically available in larger contiguous blocks that can support faster, more spectrally efficient services; (2) a provider typically prefers spectrum compatible with its existing spectrum holdings that can be integrated into its network at lower cost and that can be used by its base of devices; (3) higher frequency spectrum employs smaller antenna elements that can provide significantly better antenna gain and take better advantage of performance-enhancing technologies such as Multiple Input Multiple Output (MIMO), beamforming, and spatial multiplexing; (4) high frequency spectrum is often subject to less stringent build-out and other regulatory requirements that can significantly impact costs; and (5) high frequency spectrum is in use throughout the world, which fosters faster development of devices and equipment, with lower costs from greater economies of scale and international standardization.[5] It would be arbitrary to construct a spectrum screen based on only the supposed benefits of low-frequency spectrum while ignoring the countervailing benefits of high-frequency spectrum.[6]

Third, with soaring wireless demand, network investment is now typically driven by capacity, not coverage, concerns, and all operators are rapidly "densifying" their networks to meet capacity needs. AT&T, for one, is adding 10,000 macrocells, 40,000 small cells and over a

---

[3] Katz/Haile/Israel/Lerner Decl. ¶ 7 ("From an economic and public-interest perspective, Sprint's selective inclusion of some costs (*e.g.*, cell site rental fees) and exclusion of others (*e.g.*, spectrum license fees) is arbitrary, unjustifiable, and economically unsound.").

[4] Katz/Haile/Israel/Lerner Decl. ¶¶ 3, 11, 13; *id.* ¶ 10 ("This conclusion does not depend on an assumption of perfectly competitive markets or any particular market structure; it applies whatever the nature of competitive interaction in the marketplace."). *See also United States Telecom Ass'n* v. *FCC*, 290 F.3d 415, 425, 429 (D.C. Cir. 2002) ("naked disregard of the competitive context" is arbitrary).

[5] *See* Reed/Tripathi Decl. at 9.

[6] *See, e.g.*, *Nat'l Ass'n of Regulatory Util. Comm'rs* v. *Dep't of Energy*, 680 F.3d 819, 824-25 (D.C. Cir. 2012) (agency cannot lawfully consider only factors that cut one way and ignore factors that cut the other way).

thousand distributed antenna systems ("DAS") as part of its Project VIP expansion. In today's capacity-driven environment, cells are rarely sized to reflect the maximum achievable cell size of a theoretical coverage-driven deployment. And in capacity-driven areas where cell sizes must be small and are only getting smaller, the propagation "advantage" of low-frequency spectrum is actually a *dis*advantage, because it causes more interference between base stations.[7]

Fourth, a myopic focus on theoretical benefits of low-frequency spectrum in hypothetical single-band, coverage-only, green-field scenarios arbitrarily ignores the impact of existing spectrum holdings on network design. Real-world wireless networks are not pure low or high frequency deployments. Each of the four largest operators has a mix; indeed, each has more high than low-frequency spectrum. Thus, as Drs. Reed and Tripathi explain, even the cell sites of operators that have substantial low-frequency holdings typically transmit both low and high-frequency signals and must be engineered to reflect the weaker propagation of high-frequency spectrum, not to take full advantage of the greater propagation of low-frequency spectrum.[8] In addition, when operators acquire spectrum, they deploy it in their existing, already dense cell grids, not in green-field deployments built from scratch, and thus, in most instances, it is simply not correct that a network operator's valuation of spectrum will be driven predominantly by the need to build and operate new base stations at new cell site locations. "An agency's use of a model is arbitrary if that model bears no relationship to the reality it purports to represent."[9]

Fifth, even if the spectrum screen could rationally be based on an engineering evaluation of cell-site deployment costs, none of the frequency-weighting proposals actually reflects any such evaluation. To the contrary, as Drs. Reed and Tripathi show, the large cost differences used as the foundation for these proposals are the product of overly simplistic, one-sided calculations that ignore basic engineering facts that substantially reduce or eliminate frequency-dependent cell size and cost differences. For example, Sprint assumes that low-frequency spectrum is *always* better at penetrating buildings and that high-frequency spectrum holders must therefore build nearly *three times* as many cell sites in urban areas to achieve the same in-building coverage. But the very study on which Sprint's expert relies concludes that building penetration is a mainly a function of the materials used in the building and that, in fact, *high*-frequency spectrum often has the advantage in penetrating the steel and reinforced-concrete construction

---

[7] Reed/Tripathi Decl. at 7-8, 16. *See also Sprint 2/11/14 Ex Parte* at 19 ("The propagation characteristics of higher-frequency spectrum also offer certain competitive advantages in specific circumstances. The greater attenuation of these signals permits greater frequency re-use, allowing more cell-splitting in very dense urban areas producing greater capacity for more customers in a small area").

[8] *See* Reed/Tripathi Decl. at 3, 7-8.

[9] *Columbia Falls Aluminum Co.* v. *EPA*, 139 F.3d 914, 923 (D.C. Cir. 1998) (internal quotes omitted).

that is common in the dense urban areas where Sprint proposes that the Commission base screen weighting on building penetration capabilities.[10] High-frequency spectrum also has other advantages, such as increased antenna gain and decreased inter-cell interference, that can compensate (even entirely) for any propagation-related differences in building penetration.[11] Moreover, as Drs. Reed and Tripathi show, most urban buildings will generally be close enough to a cell site that they can be adequately penetrated by high or low-frequency signals. The potential "problem" buildings are likely to be a relatively small subset of buildings nearer to the cell edge (or obstructed), and in those cases, network operators use efficient in-building solutions, such as the deployment of femtocells, DAS and small cells (as both AT&T and Sprint do today), not a costly doubling or tripling of macro cell sites, as Sprint's analysis assumes.[12]

These same errors infect the suburban/rural analyses. For example, Sprint defines "suburban" areas to be census tracts with population densities lower than 10,000 people/square mile. By that definition, about half of downtown Washington, D.C., the densely populated Virginia and Maryland suburbs, most of downtown Atlanta, parts of New York City, many crowded commuting corridors and countless other areas where cell density is plainly capacity driven are incorrectly assumed to be solely coverage-driven. Moreover, even in areas where network design is coverage driven, the failure to account for antenna size, gain, and downtilt, terrain and other relevant factors, inflates the supposed frequency-dependent coverage results in these analyses beyond all reason. As Drs. Reed and Tripathi show, the application of real-world network design tools that properly account for these factors confirms that even in a hypothetical green-field, coverage-only comparison of pure low- and high-frequency operators, the frequency-dependent cell size (and cost) differences are small fractions of the enormous multiples the frequency-weighting proposals assume.[13] Moreover, because a screen that applies

---

[10] *See Comparison of Radio Propagation Characteristics at 700 and 2,500 MHz Pertaining to Macrocellular Coverage*, Ottawa (April 2011) at 24-25, *available at* https://www.ic.gc.ca/eic/site/smt-gst.nsf/vwapj/smse-005-11-bell-apndix3.pdf/$FILE/smse-005-11-bell-apndix3.pdf ("CCRC Report") ("the frequency dependence of penetration loss appears to be strongly dependent on the type of building construction. . . . Industrial and commercial buildings . . . are often of steel-framed construction, and the corresponding predominant building materials are reinforced concrete, steel, and aluminum; loss through these materials is relatively much higher, and the dominant penetration mode is through slots such as windows and other frame openings, or even through grid openings in steel-reinforced concrete slabs. Losses associated with propagation through slots tend to be strongly frequency-selective, and overall decrease with increasing frequency, as the slot dimensions become larger in terms of the wavelength.").

[11] *See* Reed/Tripathi Decl. at 14-15.

[12] *See* Reed/Tripathi Decl. at 4.

[13] *See* Reed/Tripathi Decl. at 18-24.

different weights in arbitrarily-defined "rural," "suburban," and "urban" areas is entirely impractical, the actual proposals are for one-size-fits-all blended "average" weighting schemes that assume the same frequency-dependent disparities in cell sizes and deployment costs in Montana and Manhattan. This is obviously indefensible.

In the end, as Drs. Reed and Tripathi show, none of these frequency-based screen proposals can be squared with reality. If it were really the case, as Sprint and others have argued, that a provider using high-frequency spectrum would need to deploy many times more base stations than a provider using low-frequency spectrum, one would expect to see evidence of that in the real world. Yet empirical data confirm that AT&T (the operator with the highest average low-frequency holdings) and Sprint and T-Mobile (the operators with the heaviest concentration in high-frequency spectrum) have cell densities that are roughly *equal* – and not just in urban areas, but throughout entire CMAs of greatly varying population density. In fact, AT&T has *more* cell sites than Sprint in almost all of the top 100 CMAs (which account for nearly two-thirds of the U.S. population), and more than T-Mobile in about half of those. Where Sprint and T-Mobile do have more cell sites, they typically have 20 to 30 percent more, not many times more, as the frequency-based screen proposals would predict. The Commission cannot lawfully apply weights in the spectrum screen that are derived from assumptions that high-frequency deployments require many times the number of cell sites as low-frequency deployments when there is no such disparity in the real world.

As Drs. Katz, Haile, Israel and Lerner explain, a weighted screen would undermine the competition-related purposes of the screen and cause substantial other public interest harms. It would "harm consumers of mobile wireless services by inefficiently increasing service providers' costs of expansion, distorting network investment, and weakening competition, all of which would lead to higher quality-adjusted prices."[14] At the same time, it would largely insulate those with relatively more high-frequency spectrum from any spectrum aggregation review at all; for example, Sprint's recent proposal, on its face, would permit a single carrier to acquire more than 99 percent of the high-frequency spectrum included in the current screen (nearly two-thirds of all spectrum in the screen) without even triggering Commission scrutiny. Indeed, under Sprint's proposal, it could contend that a *combined* Sprint/T-Mobile with spectrum holdings that would dwarf all others would be comfortably below the one-third screen in every single county and CMA in the country (even after adding the 2.5 GHz and AWS-4 spectrum). A frequency-based screen would also jeopardize the success of the Commission's 600 MHz auction, not only by limiting bidding competition, but by using regulation to diminish the value of low-frequency spectrum. Devaluing low-frequency spectrum will inevitably result in lower prices for such spectrum at auction, which in the case of the 600 MHz auction, increases the

[14] Katz/Haile/Israel/Lerner Decl. ¶ 33.

chance of auction failure or a decreased amount of spectrum freed up for mobile broadband use.[15]

There is simply no basis to skew the spectrum screen rules so one-sidedly in favor of Sprint and T-Mobile (which together hold *more* spectrum than AT&T and Verizon combined), particularly when it is clear that both companies have the wherewithal to compete in the marketplace and in the Commission's spectrum auctions without special regulatory assistance.[16] Indeed, regulation that is so nakedly designed to reduce the value of low-frequency spectrum and to penalize *existing* holders of that spectrum after the fact would be improperly retroactive.[17] It would be deeply arbitrary and unfair to change the rules of the game with regard to low-frequency spectrum after carriers have invested billions of dollars acquiring it and building it out.

Rather than changing how the spectrum screen works, the Commission should instead focus on updating the screen to include all spectrum that is "suitable" and "available" for mobile wireless use. There is no possible justification for continuing to exclude any portion of Sprint's BRS/EBS spectrum. Sprint is using that spectrum today for its "Spark" service, which it claims can "deliver[] peak wireless speeds of 60Mbps today on capable devices, with the potential for speeds three times as fast by late next year."[18] Sprint continues to insist, however, that the

---

[15] Katz/Haile/Israel/Lerner Decl. ¶ 45 ("the proposed screen would be likely to yield a triple blow to the 600 MHz auction: reduced competition as a result of fewer bidders and fewer licenses pursued by each bidder; reduced willingness to pay among the bidders that do compete; and an increased supply of low-frequency spectrum on secondary markets, further reducing willingness to pay at auction"). For example, Sprint's weighted screen would appear to leave AT&T with less than 10 MHz of screen "headroom" going into the 600 MHz action in 70 of the top 100 CMAs (even after including 2.5 GHz and AWS-4 spectrum).

[16] *See* Harro Ten-Wolde, Reuters, "Deutsche Telekom to Pour More Cash into T-Mobile in US," Reuters (March 6, 2014), *available at* http://uk.reuters.com/article/2014/03/06/uk-deutschetelekom-results-idUKBREA250A720140306 ("'We currently don't have any problem to be competitive in the U.S. and to grow our business there,' CEO Hoettges said"); *see also* Sue Marek, "Softbank Will Invest $16 Billion in Sprint, Open R&D Center in Silicon Valley," Fierce Wireless, July 8, 2013, http://www.fiercewireless.com/story/softbank-will-invest-16b-sprint-open-rd-center-silicon-valley/2013-07-08.

[17] *See, e.g.*, *U.S. Airwaves, Inc.* v. *FCC*, 232 F.3d 227, 235 (D.C. Cir. 2000) ("we start from the intuitive premise that an agency cannot, in fairness, radically change the terms of an auction after the fact").

[18] Press Release, Sprint, Sprint's All-New Network Brings Sprint Spark and HD Voice to Philadelphia and Baltimore (Feb. 11, 2014), http://newsroom.sprint.com/news-releases/sprints-all-new-network-brings-sprint-spark-and-hd-voice-to-philadelphia-and-baltimore.htm.

Commission should exclude its 120 MHz of EBS spectrum in its entirety,[19] or, if it is included, apply a 5 percent discount for use by educational licensees, another 16 percent discount for gaps in coverage (white spaces), and exclude altogether any portion of that spectrum that cannot be combined into 20 MHz contiguous blocks.[20] As Drs. Reed and Tripathi note, almost every spectrum band has similar, surmountable "impairments" – Cellular spectrum is subject to special power limits, Lower 700 MHz A block is subject to large exclusion zones, the Lower 700 MHz D and E blocks are unpaired, and the PCS H block is only 10 MHz – and yet the Commission includes such spectrum in the screen with no discount.[21] It would be arbitrary to grant Sprint special discounts for its EBS spectrum and fail to provide discounts for all of the other spectrum bands that face limitations of a similar or greater magnitude.[22]

But whatever decisions the Commission ultimately reaches on how much of the spectrum in each band to include in the screen, the Commission must reject the proposals by Sprint and others to treat the low-frequency spectrum that is included in the screen differently than higher-frequency spectrum.

Sincerely,

/s/ David L. Lawson
David L. Lawson
Counsel for AT&T

---

[19] *Sprint 2/11/14 Ex Parte* at 28-30.

[20] *Sprint 2/11/14 Ex Parte* at 31-36.

[21] Reed/Tripathi Decl. at 27-28.

[22] If the Commission does adopt a frequency-weighting scheme, however, it is clear under the weighted screen proponents' own cell size rationale that the unpaired Lower 700 MHz D and E blocks could not rationally be treated as low-frequency spectrum that supports very large cell sizes. As Drs. Reed and Tripathi explain, Lower 700 MHz D and E block spectrum is suitable for supplemental downlink capacity through carrier aggregation technologies that bond it to high-frequency spectrum. Accordingly, these bonded spectrum bands must be deployed on a cell grid that accounts for the weaker propagation of the high-frequency spectrum. Reed/Tripathi Decl. at 9. For the same reasons, if the Commission establishes a separate low-frequency spectrum screen, the Lower 700 MHz D and E blocks should not be included in that screen.

SPRINT'S PROPOSED WEIGHTED SPECTRUM SCREEN DEFIES ECONOMIC LOGIC AND IS INCONSISTENT WITH ESTABLISHED FACTS

Declaration of

Michael L. Katz, Philip A. Haile, Mark A. Israel, and Andres V. Lerner[1]

MARCH 13, 2014

[1] Katz: Sarin Chair in Strategy and Leadership, University of California Berkeley; Haile: Ford Foundation Professor of Economics, Yale University; Israel: Executive Vice President, Compass Lexecon; Lerner: Executive Vice President, Compass Lexecon.

CONTENTS

I. INTRODUCTION 1

II. SPRINT'S PROPOSAL IS BASED ON AN ARBITRARY AND UNJUSTIFIABLE DEFINITION OF THE COSTS OF DEPLOYING AND OPERATING A WIRELESS SERVICES NETWORK 2

III. SPRINT'S PROPOSAL IS CONTRARY TO FUNDAMENTAL ECONOMIC LOGIC AND MARKET BEHAVIOR 4

IV. SPRINT'S SPECTRUM SCREEN PROPOSAL IS BASED ON FLAWED ASSUMPTIONS THAT MAGNIFY THE DISTORTIONARY EFFECTS OF SPRINT'S ARBITRARY EXCLUSION OF SPECTRUM COSTS 6

A. SPRINT'S PROPOSAL IS BASED ON THE FALSE ASSUMPTION THAT THE PURPOSE OF ALL DEPLOYMENTS IS TO EXPAND COVERAGE 6

B. SPRINT'S PROPOSAL FAILS TO ACCOUNT FOR THE EFFECTS OF OPERATORS' EXISTING SPECTRUM HOLDINGS AND NETWORK DEPLOYMENTS 8

C. SPRINT'S PROPOSAL OVERSTATES THE ADVANTAGES OF LOW-FREQUENCY SPECTRUM AND UNDERSTATES THE ADVANTAGES OF HIGH- FREQUENCY SPECTRUM IN OTHER WAYS 9

V. SPRINT'S "AVERAGED" WEIGHTED SPECTRUM SCREEN IS INCONSISTENT WITH ITS OWN PROPOSAL AND WOULD MAGNIFY THE ECONOMIC INEFFICIENCIES OF ITS APPROACH 11

VI. SPRINT'S PROPOSAL WOULD HARM CONSUMERS, DISTORT COMPETITION, AND REDUCE EXPECTED AUCTION REVENUES 14

A. SPRINT'S PROPOSAL WOULD HARM CONSUMERS AND DISTORT COMPETITION IN WIRELESS SERVICES MARKETS 14

B. SPRINT'S PROPOSAL WOULD REDUCE EXPECTED AUCTION REVENUES, DISTORT THE REALLOCATION OF SPECTRUM FROM BROADCAST TELEVISION TO MOBILE WIRELESS SERVICES, AND INCREASE THE LIKELIHOOD OF AUCTION FAILURE 17

VII. CONCLUSION 21

I. INTRODUCTION

1. Sprint Corporation ("Sprint") has proposed a spectrum screen in which low-frequency spectrum is assigned greater weight than high-frequency spectrum.[2] Sprint asserts that low-frequency spectrum gives rise to lower costs of deployment and operation and, thus, is of greater competitive significance than high-frequency spectrum. We have been asked by counsel for AT&T to assess the economic logic of this proposal and the likely implications of its adoption.

2. Our central finding is that Sprint's proposal runs counter to fundamental economic principles, ignores market forces, and is based on flawed engineering assumptions that lead to misleading economic conclusions. If enacted, Sprint's proposal would harm competition, reduce consumer welfare, increase the risk of auction failure, and distort the reallocation of spectrum from broadcast television to mobile wireless services.

3. Our specific findings are as follows:

- Sprint's proposal is based on arbitrarily and unjustifiably excluding the cost of acquiring spectrum from the calculation of the cost of deploying and operating a wireless services network. In effect, the proposal acts as if spectrum rights were free, despite abundant evidence that they are not.
- The calculations Sprint makes based on its arbitrary exclusion of license costs are especially misleading because fundamental market forces cause the relative prices for licenses to different spectrum bands to offset differences in other costs or benefits associated with deployment and operation of wireless networks using those bands.

---

[2] *Ex Parte* Submission of Sprint Corporation, Sprint's Competition-Based Framework For A Weighted Wireless Broadband Spectrum Screen, WT Docket No. 12-269 (filed February 11, 2014) (hereinafter *Sprint Submission*).

Sprint's proposed weights rely on calculations that systematically exclude these offsetting effects.

- Even if one were to accept Sprint's flawed premise that the costs of spectrum licenses should be ignored, Sprint's proposal is based on additional flawed assumptions that lead to incorrect and misleading economic conclusions. Notably, Sprint's proposal ignores the evidence that high-frequency spectrum can be more cost-effective to deploy than low-frequency spectrum because of factors such as differences in propagation and antenna characteristics and differences in the relationship to a network operator's existing bands.
- Implementing Sprint's proposal would harm consumers of mobile wireless services by distorting investment decisions by, and competition among, service providers.
- Sprint's proposed weighting scheme would reduce expected auction revenues and increase the likelihood that the 600 MHz auction will fail. And, even if the weighting scheme did not lead to complete failure of the auction, it could inefficiently diminish the reallocation of spectrum from broadcast television to higher-valued mobile wireless use.

4. The remainder of this declaration explains these findings in greater depth and provides details of the facts and analysis that underlie them.

II. SPRINT'S PROPOSAL IS BASED ON AN ARBITRARY AND UNJUSTIFIABLE DEFINITION OF THE COSTS OF DEPLOYING AND OPERATING A WIRELESS SERVICES NETWORK

5. Sprint describes its proposal as a "competition-based screen."[3] As we will explain below, Sprint's proposal, in fact, has no foundation in a sound assessment of competition. Instead,

[3] *Sprint Submission* at iii.

Sprint's proposal attempts to replace market-determined valuations with a purely "engineering analysis" of the value of high- and low-frequency spectrum coupled with arbitrary choices about which costs to count and which to ignore.[4]

6. According to Sprint, its "proposal would weight spectrum [in a given band] based on the cost to deploy and operate using that band, recognizing the reality that low-band spectrum is typically significantly more cost-effective to deploy than higher-frequency spectrum."[5] Sprint provides the following rationale for its proposed approach:[6]

> The actual cost to deploy and operate a particular band – and even the timeliness of doing so, which can vary by band – directly affects the competitive ability of a carrier in the downstream market. The availability and cost of equipment is another key factor impacting the cost to deploy and operate using a particular band.

7. Inspection of the calculations underlying Sprint's proposed weights reveals that it has *not* based these weights on the "actual cost" of deploying and operating a wireless network on a given frequency band. In particular, Sprint's cost calculations entirely exclude the cost of the spectrum itself. From an economic and public-interest perspective, Sprint's selective inclusion of some costs (*e.g.*, cell site rental fees) and exclusion of others (*e.g.*, spectrum license fees) is arbitrary, unjustifiable, and economically unsound.[7]

8. In actuality, "whether competing firms retain the ability to enter a market or expand output swiftly and effectively in response to one or more firms' attempt to exercise market

---

4 *Sprint Submission* at iii.

5 *Sprint Submission* at iii.

6 *Sprint Submission* at 12.

7 It is not arbitrary in terms of its effects on Sprint. Sprint's proposed weighted screen ensures that Sprint is found not to have excessive spectrum holdings, despite holding licenses for more spectrum than any other wireless carrier in the United States.

power"[8] depends on the *full* cost of entry and/or expansion, including the combined cost of spectrum and associated buildout. Sprint provides no justification for its assumption that rivals' ability to enter and expand output is driven by the costs of plant, equipment, power, and labor but not by the cost of spectrum. Indeed, no justification is possible.

9. The brevity of our discussion of this point does not mean that it lacks importance; to the contrary, it is an indication of how clear and fundamental Sprint's error is. The arbitrariness of Sprint's definition of costs alone renders its proposal economically unsound. This error is compounded by Sprint's failure to account at the most basic level for how markets function; a failure to which we now turn.

III. SPRINT'S PROPOSAL IS CONTRARY TO FUNDAMENTAL ECONOMIC LOGIC AND MARKET BEHAVIOR

10. Sprint's proposal is inconsistent with the fundamental economic logic that more valuable assets sell for higher equilibrium prices. Hence, if, as Sprint claims, low-frequency spectrum is more valuable than high-frequency spectrum because it is less costly to deploy, then low-frequency spectrum licenses will sell for higher prices. As a result, the total cost of entry and expansion using either high- or low-frequency spectrum will generally tend to equalize because, if they did not, then demand for spectrum would tend to shift to the type that permitted less-costly entry and expansion, pushing the price up for that type of spectrum. This conclusion does not depend on an assumption of perfectly competitive markets or any particular market structure; it applies whatever the nature of competitive interaction in the marketplace. When all of the relevant costs are counted, there is no basis for the proposition that high-frequency spectrum is always worse for competitive entry and expansion than is low-frequency spectrum.

[8] *Sprint Submission* at 22.

11. In attempting to replace sound economic reasoning with engineering-based calculations, Sprint's proposal ignores the power of markets in determining equilibrium prices. As a result, Sprint's weighting scheme ignores the role of prices in accomplishing exactly what it claims to be the objective of a weighted scheme: to have relative total costs of using high- versus low-frequency spectrum reflect its assertion that low-frequency spectrum requires greater network investment.[9] The author of the report appended to Sprint's proposal, Dr. Liopiros, has explicitly recognized this point elsewhere:[10]

> A spectrum band that requires more capital investment to deploy a broadband network is less valuable than a spectrum band that requires less capital investment for the same coverage and service. *Any cost differences from deploying one spectrum band over another will translate into a difference in the value of the spectrum bands.* [emphasis added]

12. Sprint cites previous filings in these proceedings by Professor Jon M. Peha and by the U.S. Department of Justice to suggest that spectrum price differences may not fully reflect differences in buildout costs.[11] In previous filings in these proceedings, we have explained the major errors in the economic analysis of the Peha and Department of Justice filings.[12] And, in any case, a failure of prices fully to adjust would not justify ignoring price differences altogether as Sprint does.

---

9 *Sprint Submission* at 16 and footnote 35.

10 Dr. Kostas Liopiros, "Value and Utility of the U.S. 2.5 GHz Spectrum Band," prepared for Sprint Nextel, 27 February 2013, *available at* http://newsroom.sprint.com/images/9004/press/25GHzValueUtilityAnalysisMarch2013.pdf, site visited February 24, 2014, at 21-22.

11 Jon M. Peha, "Bringing Weight to the Spectrum Screen: A Response to AT&T," WT Docket No 12-269, March 31, 2013.

12 Michael L. Katz, Philip A. Haile, Mark A. Israel, and Andres V. Lerner, "Comments on Appropriate Spectrum Aggregation Policy with Application to the Upcoming 600 MHz Auction," WT Docket No. 12-269, June 13, 2013. Michael L. Katz, Philip A. Haile, Mark A. Israel, and Andres V. Lerner, "Comments on the Submission of the U.S. Department of Justice Regarding Auction Participation Restrictions," WT Docket No. 12-269, June 13, 2013.

13. In sum, just as there is no defensible economic basis for ignoring spectrum costs when evaluating the costs of entry or expansion using high- versus low-frequency spectrum, there is no sound economic justification for ignoring the *differences* in these costs; yet doing both is the core logic of Sprint's proposal.

IV. SPRINT'S SPECTRUM SCREEN PROPOSAL IS BASED ON FLAWED ASSUMPTIONS THAT MAGNIFY THE DISTORTIONARY EFFECTS OF SPRINT'S ARBITRARY EXCLUSION OF SPECTRUM COSTS

14. Even accepting Sprint's flawed premise—that only deployment costs should matter in determining the competitive significance of a particular spectrum band, to the exclusion of the cost of the spectrum itself—Sprint's proposal is based on flawed assumptions that lead to incorrect and misleading economic conclusions. In particular, Sprint (i) incorrectly assumes that the purpose of all deployments in all geographic areas is to expand coverage, not increase capacity; (ii) fails to account for operators' existing spectrum holdings and network deployments; and (iii) overstates the advantages of low-frequency spectrum and understates the advantages of high-frequency spectrum in various other ways. These erroneous assumptions magnify the distortionary effects of Sprint's arbitrary exclusion of spectrum costs and, in turn, exacerbate the harms to consumers and competition that Sprint's proposed screen would cause.

A. SPRINT'S PROPOSAL IS BASED ON THE FALSE ASSUMPTION THAT THE PURPOSE OF ALL DEPLOYMENTS IS TO EXPAND COVERAGE

15. A fundamental flaw in Sprint's proposed weighting scheme is its premise that the only factor that determines the value of spectrum is its propagation characteristics, with low-frequency spectrum able to propagate farther than high-frequency spectrum. The implicit

assumption behind Sprint's premise is that all spectrum is used to expand coverage rather than to expand capacity. Sprint asserts:[13]

> the propagation characteristics of a particular band serve as the most significant factor affecting the cost to deploy and operate that spectrum in a wireless network and thus its competitive utility. Notably, these characteristics include attenuation of signals as they travel through space, which determines the maximum range and coverage of a cell site, and the ability of radio signals to penetrate objects such as exterior walls, which determines coverage inside buildings.

16. Although coverage needs may be the primary driver of wireless network design in rural areas, capacity needs generally drive the number and size of cells in urban areas. Capacity builds require many more (and smaller) cells than would be required solely to provide coverage. Hence, in urban areas, either low- or high-frequency spectrum can serve a geographic area with roughly the same number of cells. Despite this established fact, Sprint incorrectly claims that low-frequency spectrum is more cost-effective than high-frequency spectrum, even in urban areas (which Sprint defines as areas with greater than 10,000 people per square mile).

17. In suburban and rural areas of the country, Sprint's implicit assumption that *all* incremental network build-outs are to increase coverage is similarly misguided. Large portions of urban and suburban areas are high-demand areas that have long been capacity driven (and are increasingly so), requiring dense cell networks regardless of frequency.[14]

18. In today's wireless marketplace, investment is increasingly driven by capacity rather than coverage needs because of the significant increase in demand for mobile wireless services,

---

[13] *Sprint Submission* at 18.

[14] Jeffrey H. Reed and Nishith D. Tripathi, "The Value of Spectrum: A Response to Dr. Kostas Liopiros' Paper," WT Docket No 12-269, March 13, 2014 (hereinafter *Reed and Tripathi*) at 11. Of course, in areas with very sparse users, network design may be driven primarily by coverage needs and a high-frequency network may require more cell sites to provide the same coverage as a low-frequency one.

driven by the growth of wireless broadband use. Sprint asserts that a new, weighted spectrum scheme is needed because the "shift in consumers' use of and expectations for wireless communications capabilities has radically changed the way operators build their networks, including their choice of spectrum bands over which to offer service in a particular location or environment."[15] Sprint's premise about radically changing wireless usage is correct, but its conclusion from this premise is exactly backward: The principal effect of the growth of broadband has been to increase the need for additional capacity, not coverage, which further invalidates the rationale for Sprint's proposal.

B. SPRINT'S PROPOSAL FAILS TO ACCOUNT FOR THE EFFECTS OF OPERATORS' EXISTING SPECTRUM HOLDINGS AND NETWORK DEPLOYMENTS

19. Sprint's weighting scheme also fails to account for the real-world effects of operators' existing spectrum holdings and network deployments. In particular, Sprint ignores that most carriers, including AT&T and Verizon Wireless, have a mix of low- and high-frequency spectrum. Because carriers typically deploy both high- and low-frequency spectrum on the same cell towers, cell sizes are designed to account for the propagation characteristics of the high-frequency spectrum, and not simply to the full propagation potential of low-frequency spectrum.[16]

20. Moreover, Sprint's focus on the relative cost of deploying high- versus low-frequency spectrum ignores the fact that when network operators obtain additional spectrum rights, they typically use those rights in areas where they already have deployed wireless networks. To the extent that lower-frequency spectrum is deployed on towers initially built to carry higher-

---

[15] *Sprint Submission* at 10.

[16] *Reed and Tripathi* at 4, 10-11.

frequency spectrum or that already support a mix of low- and high-frequency spectrum, the relative value of high- and low-frequency spectrum is unlikely to be driven significantly by the cost of building and operating new base stations, as Sprint's proposal assumes.[17]

21. These factors lead Sprint to further overestimate the value of low-frequency spectrum relative to high-frequency, and further magnify the distortions that would be created by Sprint's weighted-screen proposal.

C. SPRINT'S PROPOSAL OVERSTATES THE ADVANTAGES OF LOW-FREQUENCY SPECTRUM AND UNDERSTATES THE ADVANTAGES OF HIGH- FREQUENCY SPECTRUM IN OTHER WAYS

22. Sprint's assumptions regarding the relative costs of deploying high- versus and low-frequency spectrum are also incorrect because Sprint focuses on factors that make high-frequency spectrum more expensive to deploy relative to low-frequency spectrum while ignoring the factors that make low-frequency relatively more expensive to deploy.

23. First, Sprint and its expert, Dr. Liopiros, assume that low-frequency spectrum is superior to high-frequency spectrum in urban areas because of the ability of low-frequency to "penetrate objects such as exterior walls, which determines coverage inside buildings."[18] This claim is based on a misreading of the evidence. Dr. Liopiros cites a Canadian survey of the engineering literature in support of his claim that low-frequency spectrum has a superior ability to penetrate

---

[17] *Reed and Tripathi* at 10-11.

[18] *Sprint Submission* at 18; Kostas Liopiros, Formulation of a Weighted Spectrum Screen, WT Docket No 12-269, February 11, 2014 (hereinafter *Liopiros Paper*). As Professor Reed and Dr. Tripathi report, Dr. Liopiros assumes that to address that in-building coverage disadvantage, a high-frequency provider must build nearly three times as many cell sites as a low-frequency provider in even the most urban, capacity-driven areas. (*Reed and Tripathi* at 2.)

buildings.[19] However, as explained by Professor Reed and Dr. Tripathi, the survey does *not* conclude that low-frequency spectrum has a uniform building-penetration advantage as assumed by Dr. Liopiros.[20] Rather, the survey concluded that either low- or high-frequency spectrum can be superior depending on the building material. In fact, the article points out that, for the materials typically used in urban buildings, high-frequency spectrum is often better in terms of penetration.[21]

24. In addition, where network operators do face in-building coverage issues, they typically respond with targeted in-building solutions such as femtocells, picocells, Distributed Antenna Systems, and Wi-Fi, not the much more costly doubling or tripling of the number of outdoor base stations Sprint's analysis assumes.[22]

25. High-frequency spectrum has additional advantages in urban areas beyond building penetration. In particular, because capacity needs require very small cells in high-density areas, low-frequency network operators must often employ engineering strategies to avoid inter-cell interference, while operators of high-frequency networks face fewer such constraints.[23] Sprint itself acknowledges certain advantages of high-frequency spectrum, stating that:[24]

---

19 Comparison of Radio Propagation Characteristics at 700 and 2,500 MHz Pertaining to Macrocellular Coverage, Communications Research Centre Canada, Ottawa, April 2011 ("*Canadian Survey*").

20 *Reed and Tripathi* at 12-13.

21 *Canadian Survey* at 24-25; *Reed and Tripathi* at 13.

22 *Reed and Tripathi* at 4, 17.

23 *Reed and Tripathi* at 8, 16. Similarly, it is our understanding that the smaller antenna size for high-frequency networks means that high-frequency operators have much greater flexibility to employ antenna techniques that can substantially increase antenna gain and improve high-frequency signal strength. (*Reed and Tripathi* at 15.)

24 *Sprint Submission* at 19. The Commission also has recognized the advantages of high-frequency spectrum, stating:

> The propagation characteristics of higher-frequency spectrum also offer certain competitive advantages in specific circumstances. The greater attenuation of these signals permits greater frequency re-use, allowing more cell-splitting in very dense urban areas producing greater capacity for more customers in a small area.

Nevertheless, Sprint ignores these advantages of high-frequency spectrum in deriving its weighted spectrum scheme even for dense, urban areas. Sprint's omission of the relative advantages of high-frequency spectrum leads Sprint to overstate further the value of low-frequency relative to high-frequency spectrum, and magnifies its erroneous conclusions regarding the competitive significance of different spectrum bands.

V. SPRINT'S "AVERAGED" WEIGHTED SPECTRUM SCREEN IS INCONSISTENT WITH ITS OWN PROPOSAL AND WOULD MAGNIFY THE ECONOMIC INEFFICIENCIES OF ITS APPROACH

26. Even if one were to accept the claim that Sprint's analysis reflects the actual deployment costs of high- and low-frequency spectrum, and that these differences provide a sound basis for a weighted screen, Sprint's actual proposal is quite different from Sprint's stated approach. A foundational premise of Sprint's technical analysis is that weights in a spectrum screen should be based on the cost of building a network using a particular band of spectrum. And Sprint recognizes that frequency-related network-cost differences are highly dependent upon where the spectrum is deployed (*e.g.*, urban versus rural areas). But Sprint ultimately abandons a scheme

---

> Although higher-frequency spectrum does not provide the same level of coverage or in-building penetration as lower-frequency spectrum, in some instances, *higher-frequency spectrum may be just as effective, or more effective, for providing significant capacity, or increasing capacity, within smaller geographic areas.* For instance, AT&T has noted that it cannot be assumed that lower frequency bands will require fewer cells or be more economical to deploy because other factors also affect propagation – including the presence of large buildings in urban areas or other physical impediments. In addition, capacity enhancement technologies such as multiple-input and multiple-output (MIMO) may perform better at higher frequencies. [emphasis added]

Fifteenth CMRS Competition Report, ¶ 296.

that takes into account geographical distinctions as impractical. Instead, Sprint proposes an *average* weighting spectrum screen, which would apply the *same* spectrum weights everywhere, notwithstanding the wide variation in deployment cost differences across areas that its own analysis finds.[25]

27. Not only is Sprint's proposed application of the same weights to all areas of the country inconsistent with its stated approach, it is also fundamentally flawed. The use of an average calculated across all "rural," "suburban," and "urban" areas, which would have disparate relative frequency-dependent deployment costs, necessarily leads to weights that are incorrect in the vast majority of areas and do not reflect actual deployment costs.

28. For instance, Sprint's proposal assumes that the deployment costs of a 2.5 GHz network in an urban area would be 6.4 times higher than those of a 700 MHz network, even though its own analysis claims that the relative cost difference would be only about 2.5 times (and despite the lack of evidence of any cost advantage of low-frequency spectrum in urban areas, as we discussed above).[26] This large discrepancy between the deployment cost difference estimated by Sprint itself and the assumed deployment cost difference implicit in Sprint's proposal is driven by the fact that its proposed weight for urban areas (such as New York City) is driven in large part by Sprint's estimated cost differences for rural areas (such as North Dakota) and suburban areas.[27]

---

[25] *Sprint Submission* at 23-24.

[26] See *Reed and Tripathi* at 24-25. As Professor Reed and Dr. Tripathi explain, the 2.5 multiple is itself significantly overstated. (*Reed and Tripathi* at 24.)

[27] Sprint defines Census tracts with more than 10,000 people per square mile as "urban," those with fewer than 100 people per square mile as "rural," and everything else (covering the vast majority of the U.S. population) as "suburban." Sprint then computes the percentage of the U.S.

29. The incorrect weights proposed by Sprint would have serious adverse consequences on competition and consumers, in the ways described in Section VI below. Importantly, setting a weight that is lower than would be implied by Sprint's approach in some areas (*e.g.*, rural areas) would not offset the consumer welfare harms from setting a weight for low-frequency spectrum that is too high in other areas (*e.g.*, urban areas). The adverse economic impact of these incorrect weights is especially significant because the use of weights that are arbitrarily high in urban areas (even according to Sprint's approach), where spectrum scarcity is a significant issue, will cause significant harm to consumers and competition.

30. The fact that Sprint feels compelled to apply the same weights to all areas of the country reveals the complexity in designing a scheme that captures the deployment costs of different spectrum bands (even if one accepts, *arguendo*, Sprint's premise that a weighted screen should reflect such costs). In fact, the problem goes beyond geographic variation—following Sprint's own logic, the appropriate weights in a given area would have to change over time, as the need for capacity versus coverage builds changes, the status of existing tower buildouts changes, antenna technology changes, and so on. This logic thus leads to an intractable situation in which, either a changing spectrum screen would need to be applied retroactively, or the historical screen that influenced current spectrum holdings would not reflect current competitive conditions.

31. Fortunately, the infirmities of Sprint's proposal do not imply the absence of a workable alternative. The solution lies in the power of market prices, which constantly adjust on their own to reflect the value of different types of spectrum in a given geographic area at a given point in

---

population that falls into each of those arbitrary buckets, and applies those percentages to its rural, suburban, and urban spectrum weights to obtain a single "weighted average" spectrum weight for each spectrum band. (*Sprint Submission* at 21.)

time. A screen based on equal weights that relies on market forces to equilibrate values is the most appropriate approach, and the most straightforward to implement.

VI. SPRINT'S PROPOSAL WOULD HARM CONSUMERS, DISTORT COMPETITION, AND REDUCE EXPECTED AUCTION REVENUES

32. Above, we demonstrated that Sprint's proposed spectrum screen has no foundation in sound economics or the assessment of competition. Instead, Sprint's proposed screen: (a) is based on arbitrary and unjustifiable choices about which costs to count and which to ignore; (b) is contrary to fundamental economic logic and market behavior; (c) attempts to replace market-determined valuations with a flawed "engineering analysis" that ignores the evidence that high-frequency spectrum can sometimes be more cost-effective to deploy than low-frequency spectrum because of differences in the prices of the underlying spectrum rights, differences in propagation characteristics, and other factors; and (d) is internally inconsistent. In sum, Sprint's proposed screen would not improve the Commission's assessment of competitive effects and, thus, would generate no public-interest benefits. In the present section, we demonstrate that, due to these flaws, Sprint's proposal would give rise to public-interest harms to competition, consumers, and taxpayers if implemented.

A. SPRINT'S PROPOSAL WOULD HARM CONSUMERS AND DISTORT COMPETITION IN WIRELESS SERVICES MARKETS

33. The proposed spectrum screen would harm consumers of mobile wireless services by inefficiently increasing service providers' costs of expansion, distorting network investment, and weakening competition, all of which would lead to higher quality-adjusted prices.

34. In particular, when assessing the costs and benefits of a spectrum acquisition, a rational wireless network operator will take into account the likelihood that some or all of the acquisition

will be blocked by the Commission. The screen plays an important role as a safe harbor and a signal to network operators regarding which acquisitions will face close scrutiny and may not be approved. Blocked transactions can be very costly to firms due to administrative costs, breakup fees, and—perhaps most important—potentially huge disruptions to business planning and operations. Hence, transactions that exceed the screen face a significant tax due to regulatory uncertainty and the possibility of having to bear the costs of unwinding or modifying a transaction. It is important to recognize that these ill effects can arise even if, ultimately, a spectrum transaction is allowed to proceed: The delay associated with an extensive review is itself costly and an economically rational firm will base its initial decision whether to enter into the transaction on *expected* costs, including both the costs associated with delay and those that would arise if the transaction were denied or modified weighted by the perceived probability that the transaction will be denied or modified.

35. Under Sprint's proposed screen, network operators clearly would have reduced incentives to acquire low-frequency spectrum to expand their services to consumers. Perhaps less obviously, under Sprint's proposed screen, carriers also could have reduced incentives to acquire high-frequency spectrum to expand their services to consumers. An example illustrates why. Consider a network operator that needs an additional 10 MHz license to meet its capacity demands but is at the screen threshold under Sprint's proposal. In order to obtain the additional 10 MHz of high-frequency spectrum, the operator might conclude that it had to divest 20 MHz of low-frequency spectrum and then acquire 30 MHz of high-frequency spectrum to attain a net gain of 10 MHz while staying under the threshold as calculated using Sprint's proposed weights. Such a set of transactions would be more complex and very likely more costly than simply purchasing a license for an additional 10 MHz of spectrum. There also almost certainly would

be greater costs associated with network investment and possibly handsets. These additional costs constitute a tax on expansion using high-frequency spectrum.

36. This implicit tax on low- and high-frequency spectrum acquisition harms consumers because it raises the cost of expansion through business strategies that require additional spectrum, including strategies that involve offering innovative new services that are highly valued by consumers and generate significant demands for additional network capacity. It is a well-established economic principle that raising a network operator's costs of expansion, whether through a tax or some other policy, will induce the operator to compete less aggressively for consumers, raise its quality-adjusted prices, and reduce its investment in innovative new services. Moreover, competing network operators will have incentives to raise their prices as well in the face of weakened competition.[28]

37. A properly designed screen can play a useful role in providing transparency and in reducing the social and private costs of a transaction by focusing attention on those areas in which additional information would be most useful to making a proper assessment of the public-interest effects of the proposed transaction. That is, a well-designed screen can minimize the tax and impose the tax only where genuine competitive concerns exist. However, a screen such as

[28] Spectrum acquisition and network buildout decisions are often made in the context of long-term strategies, and the costs of expansion depend, in part, on long-term considerations, including regulatory uncertainty. The (unsound) logic of Sprint's proposal would create long-term uncertainty that would harm competition and consumers through the same mechanisms identified above. In particular, a weighting scheme based on engineering calculations would frequently have to be updated as technology and other factors changed the relative deployment costs of low- and high-frequency spectrum.

the one proposed by Sprint, which focuses on the wrong criteria, can be expected to harm consumer welfare and distort competition.[29]

38. Moreover, Sprint's screen is more restrictive than the current screen for carriers with significant low-frequency license holdings, which increases the extent to which the expansion tax comes into play. Sprint presents analysis indicating that, even when the AWS-4 and 2.5 GHz bands are included in the denominator of its proposed screen, AT&T would be found to exceed the threshold in counties covering 27.2 percent of the U.S. population,[30] while the corresponding figure under the Commission current screen is 14.3 percent.[31] There is no public-interest reason to bear the harms associated with Sprint's proposal. As we have shown in earlier filings, a weighted screen is not an efficient and effective way to address any foreclosure concerns that may exist.

B. SPRINT'S PROPOSAL WOULD REDUCE EXPECTED AUCTION REVENUES, DISTORT THE REALLOCATION OF SPECTRUM FROM BROADCAST TELEVISION TO MOBILE WIRELESS SERVICES, AND INCREASE THE LIKELIHOOD OF AUCTION FAILURE

39. In addition to harming consumers by directly distorting and weakening competition in mobile wireless services markets, Sprint's proposal would also generate public-interest harms in auction markets by reducing expected auction revenues, distorting the reallocation of spectrum from broadcast television to mobile wireless services, and increasing the likelihood of auction failure.

---

[29] In addition, a poorly conceived screen can harm consumers by diverting scarce investigative resources to the wrong issues, increasing the likelihood that the Commission will make the wrong decision regarding whether to approve a transaction or not.

[30] *Sprint Submission*, Table 6.

[31] *Sprint Submission*, Table 7.

40. As we have explained in earlier filings, a weighted spectrum cap or screen such as the one proposed by Sprint would be expected to weaken bidding competition and, thus, reduce expected auction revenues.[32] Indeed, at its core, the rationale underlying Sprint's proposal to apply a weighted screen to auction purchases is that doing so would "disincentivize" AT&T and Verizon from outbidding Sprint and other carriers for low-frequency spectrum licenses.[33] Sprint attempts to justify this reduction in auction competition by saying that it is necessary to prevent foreclosure.[34] However, as we have also explained in our earlier filings, this claim does not stand up to scrutiny.[35]

41. It is useful to elaborate on the mechanism by which Sprint's proposal will reduce expected revenues from the upcoming 600-MHz auction. As explained in the previous section, the most obvious and direct effect of the screen is that a network operator already at or near the screen threshold would effectively face a tax on any license purchases that put the operator over

---

32 See Michael L. Katz, Philip A. Haile, Mark A. Israel, and Andres V. Lerner, "Spectrum Aggregation Policy, Spectrum-Holdings-Based Bidding, and Unlicensed Spectrum," March 12, 2013, Exhibit B to Reply Comments of AT&T Inc., GN Docket No. 12-268 (hereinafter *Katz, Haile, Israel, Lerner Declaration*), ¶¶ 26-29 and ¶¶ 31-35, where we explain that restrictions on auction participation would be expected to reduce auction revenues. For the reasons described in the present paper, Sprint's proposed screen would have effects similar to those of reducing auction participation.

33 According to Sprint,

> Because any new low-band allocations (for instance, the 600 MHz band) would be weighted to reflect their greater competitive utility, carriers with considerable amounts of sub-1 GHz spectrum would be disincentivized, if not prevented, from acquiring additional low-band spectrum simply to foreclose rival carriers from that critical input."

(*Sprint Submission* at 17.)

34 *Sprint Submission* at 17.

35 See Mark A. Israel and Michael L. Katz, "Economic Analysis of Public Policy Regarding Mobile Spectrum Holdings," November 28, 2012, ¶¶ 26-32; Michael L. Katz, Philip A. Haile, Mark A. Israel, and Andres V. Lerner, "Spectrum Aggregation Policy, Spectrum-Holdings-Based Bidding, and Unlicensed Spectrum," March 12, 2013, Exhibit B to Reply Comments of AT&T Inc., GN Docket No. 12-268, ¶¶ 9-13.

the threshold. Even firms with current spectrum holdings well below the threshold would be discouraged from filling their available headroom with 600 MHz licenses because doing so would affect their future ability to expand their spectrum holdings.[36] Thus, a likely direct effect of the proposed screen would be both a reduction in the number of firms bidding and a reduction in the number of licenses pursued by those firms that do bid.

42. An analysis of past Commission spectrum auctions has demonstrated that even moderate restrictions on the demand of larger mobile wireless network operators could have enormous effects on auction revenues.[37] For example, a one-half reduction in the value-weighted quantity of spectrum pursued by AT&T and Verizon was estimated to result in auction revenue losses of between $6.7 billion to $13.4 billion, depending on the total number of MHz cleared. And such reductions in competition are only one component of the harm to auction revenues.

43. A second way in which Sprint's proposed screen would drive down network operators' willingness to bid would be by creating an artificial pattern of substitution between low- and high-frequency spectrum that leads to lower valuations of spectrum. Consider, for example, a network operator that needs additional spectrum to expand its offerings to consumers and is choosing whether to purchase a 10-MHz license in either the Lower 700 MHz band or the AWS-1 band. The low-frequency, 700 MHz strategy would push the firm toward the screen threshold

---

36 Moreover, bidders face another source of uncertainty in the case of the 600 MHz auction: the denominator of the spectrum-screen calculation will not be known until the auction is over, because only then will the quantity of 600 MHz spectrum allocated to mobile wireless services be known. This creates substantial risk for bidders because the proposed forward auction rules require bidders to make binding offers before knowing how much spectrum will be cleared. Bidders may be reluctant to bid for spectrum not knowing whether post-auction this new spectrum would put the bidder over the screen, potentially forcing costly divestitures.

37 See Philip A. Haile, Maya Meidan and Jonathan M. Orszag, "The Impact on Federal Revenues from Limiting Participation in the FCC 600 MHz Spectrum Auction," GN Docket No. 12-268, filed October 30, 2013.

nearly four times as quickly as would the high-frequency, AWS-1 strategy, which drives down the value of a low-frequency license relative to a high-frequency license in both primary auctions and secondary markets.

44. Lastly, a network operator at or near the screen threshold may be forced to *divest* substantial quantities of low-frequency spectrum simply to expand capacity sufficiently to meet the growing bandwidth demands of its existing customers. Thus, the supply of low-frequency spectrum on secondary markets will be driven up at the same time that demand for low-frequency spectrum is driven down. The result will be lower prices for low-frequency spectrum in secondary markets, lowering all bidders' willingness to pay for low-frequency spectrum offered in primary auctions.

45. In summary, the proposed screen would be likely to yield a triple blow to the 600 MHz auction: reduced competition as the result of fewer bidders and fewer licenses pursued by each bidder; reduced willingness to pay among the bidders who do compete; and an increased supply of low-frequency spectrum on secondary markets, further reducing willingness to pay in primary auctions.

46. In addition to reducing the revenues of the U.S. Treasury, these effects would distort the reallocation of spectrum from broadcast television to mobile wireless services and increase the likelihood of auction failure. As specified by the Spectrum Act, only when revenues from the "forward auction" (in which mobile wireless providers offer to buy licenses) are sufficient to cover the associated prices offered in the "reverse auction" (in which broadcast television licensees offer to sell their licenses) will all spectrum offered in the forward auction actually be sold. Shortfalls in revenue automatically lead to reductions in the quantity of spectrum bought

and sold.[38] Thus, Sprint's proposed screen, which will depress bidders' willingness to pay for spectrum, risks driving down the quantity of 600 MHz spectrum re-allocated to mobile wireless use. Ironically, although Sprint's proposal is predicated on the claim that access to additional low-frequency spectrum is essential to competition, this would very likely *reduce* the amount of low-frequency spectrum available to the mobile wireless industry.

VII. CONCLUSION

47. Sprint's proposed weighting scheme is not well-founded and is inconsistent with fundamental economic principles and marketplace evidence. The Commission should not adopt Sprint's proposed weighting scheme or any other scheme that attempts to declare some frequencies used to provide mobile wireless services more important for competition than others when implementing the spectrum screen.

---

[38] Middle Class Tax Relief and Job Creation Act of 2012, Pub. L. 112-96 (Feb. 22, 2012). The auction revenues also have to cover certain other costs, including those of FirstNet.

I declare, under penalty of perjury, that the foregoing is true and correct.

Michael L. Katz

March 13, 2014

I declare, under penalty of perjury, that the foregoing is true and correct.

Phil A. Haile

March 13, 2014

I declare, under penalty of perjury, that the foregoing is true and correct.

Mark A. Israel

March 13, 2014

I declare, under penalty of perjury, that the foregoing is true and correct.

Andres V. Lerner

March 13, 2014

THE VALUE OF SPECTRUM

A RESPONSE TO Dr. KOSTAS LIOPIROS' PAPER

Jeffrey H. Reed and Nishith D. Tripathi[1]

Reed Engineering

Abstract. This paper responds to a paper by Dr. Kostas Liopiros ("KL Paper") submitted by Sprint in support of changes to the spectrum screen the Federal Communications Commission ("FCC") uses to evaluate requests by mobile network operators to increase their spectrum holdings. Currently, the FCC counts all spectrum frequency bands included in its screen equally. The KL Paper argues that the propagation and building penetration characteristics of lower-frequency spectrum justify a "weighted" screen such that 1 MHz of lower-frequency spectrum counts as much as 6.4 MHz of higher-frequency spectrum. We disagree. Low- and high-frequency spectrum are substitutable for offering wireless communications services, and to the extent frequency-dependent differences impact network cost or service quality, those differences should be accounted for in the relative prices network operators are willing to pay for spectrum in different frequency bands. Furthermore, propagation is just one of many factors that influences spectrum value. Even if spectrum value were determined solely by propagation characteristics not reflected in spectrum prices, the KL Paper's simplistic formulas for estimating the "maximum cell size" for a spectrum frequency band ignore many of the key frequency-dependent characteristics of spectrum that, in real-world deployments, substantially reduce or even eliminate cell size and building penetration differences. The KL Paper also fails to account for practical considerations that negate the theoretical propagation benefits upon which its weighting scheme is based. For example, all major cellular service operators today rely heavily upon high-frequency spectrum and must therefore design their networks to reflect high-frequency propagation characteristics even if they also hold low-frequency spectrum. Finally, the KL Paper's predictions that a high-frequency network requires many times more cell sites than a low-frequency network are inconsistent with empirical observations that throughout the top 100 CMAs (which account for nearly two-thirds of the U.S. population), AT&T (the operator with the highest average holdings of low-frequency spectrum) typically has as many or more cell sites than Sprint (the operator with the highest average holdings of high-frequency spectrum).

---

[1] Professor Jeffrey H. Reed is the Director of Wireless at Virginia Polytechnic Institute and State University ("Virginia Tech") and the Willis G. Worcester Professor of Electrical and Computer Engineering at Virginia Tech. Professor Nishith Tripathi is a principal consultant at Award Solutions, a provider of technical consulting and specialized technical training for wireless communications. Dr. Tripathi is also an Adjunct Assistant Professor at Virginia Tech. Professor Reed and Dr. Tripathi previously filed a paper in this docket, attached to AT&T's January 7, 2013 Reply Comments. Their vitas are attached thereto.

1. EXECUTIVE SUMMARY

AT&T has asked us to examine the paper by Dr. Kostas Liopiros filed by Sprint in FCC Docket No. 12-269 on February 11, 2014. The KL Paper proposes a propagation-based "weighted" spectrum screen for determining whether a wireless operator's aggregation of spectrum may foreclose competitors from expanding the capacity of their networks.

To derive spectrum weights, the KL Paper argues that low-frequency signals propagate farther and penetrate buildings better than high-frequency signals, and that a network operator must therefore build and operate many times more cell sites to deploy high-frequency spectrum.[2] The KL paper then equates predicted cell site counts to total network deployment costs and concludes that high-frequency network costs are many times greater than low-frequency network costs. For example, in rural areas, the KL Paper argues that a 2.5 GHz deployment requires about 14 times more cell sites than a Lower 700 MHz deployment, and therefore that an operator using 2.5 GHz spectrum would experience costs of providing service that are about 14 times higher than those of an operator utilizing Lower 700 MHz spectrum. The KL paper makes similar predictions for suburban (7 times more) and urban (3 times more) deployments. The KL Paper then argues that the FCC's spectrum screen should reflect these differences, so that, for example, in rural areas, Lower 700 MHz spectrum would be given 14 times greater weight than 2.5 GHz spectrum. The KL Paper recognizes, however, that it would not be practical to apply separate rural, suburban, and urban weights in the FCC's spectrum screen. Accordingly, the KL Paper proposes to use a weighted average of the rural, suburban, and urban weights, based on Census tract population density statistics. As a result of this averaging, the KL Paper proposes, for example, that the FCC should assume that a network operator using 2.5 GHz spectrum would require 6.4 times more cell sites than a network operator using Lower 700 MHz spectrum everywhere, even though its own analysis showed that the difference in urban areas would be less than half that amount.

We disagree with the KL Paper's analysis. As a preliminary matter, we agree with the economic testimony in this proceeding that there is no reason to try to incorporate deployment cost differences into the FCC's spectrum screen because these cost differences should already be reflected in the prices of spectrum. If it actually costs six times as much to deploy spectrum in one frequency relative to another (and if, as the KL Paper assumes, that is the only spectrum characteristic that affects value), sophisticated network operators would be unwilling to pay more than one-sixth the price for the former relative to the latter. Thus, as the economists explain, basic principles of economics dictate that the *overall* costs of deployment (spectrum costs plus build-out costs) should equalize. It is thus difficult to conceive a reason why any such cost differences should be counted a second time in the spectrum screen.

---

[2] Prior submissions in this proceeding have argued for a less granular distinction between high- and low-frequency spectrum in the FCC's screen. These submissions generically defined high-frequency spectrum to be spectrum above 1-GHz and low-frequency spectrum to be spectrum below 1 GHz. The KL Paper, by contrast, proposes relative weights for each frequency band, including Lower 700 MHz, Upper 700 MHz, 800 MHz, AWS-1, PCS, WCS, and BRS.

The focus of this paper, however, is on the numerous *engineering* flaws in the KL Paper's analysis.

First, the KL Paper's relative weighting scheme is based on the erroneous assumption that the only spectrum characteristic that determines value is its relative propagation characteristics. In fact, propagation is just one of many factors that determine the value of spectrum in a particular deployment. To name just a few other examples, the value of spectrum also depends on channel bandwidth, compatibility and contiguity with the operator's other spectrum holdings, the ability to implement capacity-enhancing technologies (*e.g.,* MIMO), and international harmonization of spectrum bands. Moreover, in the current environment where wireless demand is rapidly increasing and network investment is typically driven by capacity (as opposed to coverage) needs, relative propagation advantages are often relatively unimportant. In fact, propagating farther in small cell environments is a disadvantage, because it creates greater in-network interference. Thus, estimating relative "values" of high- and low frequency spectrum based solely on the ability of lower-frequency spectrum to support larger maximum theoretical cell sizes (or stronger in-building signal levels) in pure coverage-driven green-field deployments, as the KL Paper does, significantly overstates any differences.

Second, even if the value of spectrum were determined solely by propagation and hence the theoretical minimum number of cell sites, the KL Paper's simplistic formulas for estimating the relative number of cell sites for high- and low-frequency deployments significantly overstate the differences by ignoring key frequency-dependent factors that, in real world deployments, substantially reduce differences in maximum cell size. For example, in the case of urban areas, the KL Paper contends that high-frequency deployments require many more cell sites than low-frequency deployments to achieve similar in-building quality of service (QoS). But, as the article cited in the KL Paper states, building penetration is mainly a function of the materials used in the building. As the article also points out, empirical observations indicate that high-frequency spectrum usually has the advantage in terms of penetration of the steel and reinforced concrete construction that is common in the very dense urban areas where the KL Paper proposes to increase the weighting of low-frequency spectrum to reflect supposed building penetration advantages.

The KL Paper also ignores that the smaller wavelengths of high-frequency spectrum permit the use of much smaller antenna elements, both at the base station and in the mobile device, and that the use of smaller antenna elements provides numerous advantages – *e.g.,* increased antenna gain, improved throughput due to lower correlation of signals received by multiple antennas, and improved MIMO performance. These antenna-related advantages can be large enough to offset any building penetration disadvantages of the magnitudes that the KL Paper assumes. The KL Paper also erroneously assumes that any absolute difference in indoor signal levels will result in QoS differences that require remediation. In fact, QoS is driven by the *ratio* of the desired signal level to the undesired signal level (*i.e.,* signal-to-interference-plus-noise ratio, or SINR), not absolute signal levels. A building that is less "porous" to high-frequency spectrum will have less of both the desired and undesired high-frequency signals, which means that the low and high-frequency SINRs in a building could end up being not materially different. In addition, by focusing on absolute signal levels, the KL Paper fails to account for the fact that

in small cell urban environments, buildings will generally be near a cell site and thus adequately penetrated by both high and low-frequency signals, and that the potential "problem" buildings are likely to be nearer to the cell edge (or obstructed), and not, as the KL Paper appears to assume, *every* building constructed of materials that are more easily penetrated by low-frequency signals. Furthermore, even in the subset of urban buildings where in-building coverage is an issue that requires remediation, network operators use far more efficient and targeted techniques than the costly doubling or tripling of macro cell sites that the KL Paper assumes, such as the deployment of femtocells, DAS and small cells (in addition to the use of higher-gain antennas, which is feasible for high-frequency spectrum), as both AT&T and Sprint are doing today.

Even in more suburban and rural areas where frequency-dependent propagation characteristics may play a more significant role in network design, the formulas used in the KL Paper significantly overstate the relative cell site and cost differences. To illustrate this point, we asked AT&T engineers to mimic the hypothetical coverage-only, green-field deployments in the KL Paper using the sophisticated models AT&T uses in the ordinary course to engineer deployments, and the results confirm that the expected cell site and cost differences are small fractions of those predicted by the simplified model used in the KL Paper.

Third, KL's theoretical propagation analysis is inconsistent with real world deployment in additional respects. There are no pure low or high frequency network operators; rather all network operators have a mix and, indeed, both Sprint and AT&T hold the majority of their spectrum in high-frequency bands. As a result, to prevent coverage holes in their capacity layers of spectrum all network operators generally must account for high-frequency propagation limits and thus build a cell grid defined more by the propagation characteristics of the highest frequency band in their spectrum portfolios than by the lowest frequency band. Moreover, as noted, all operators are "densifying" their networks today to meet capacity needs, and, in practice, cells are rarely spaced to reflect the maximum achievable propagation distance of a coverage-driven deployment. The KL Paper – by focusing on the cost of base stations as a proxy for relative value – also mistakenly assumes a "green-field" deployment. In fact, most operators, including AT&T and Sprint, will generally have base stations in the areas where they would deploy new spectrum, and their valuation of new spectrum thus would not likely be driven primarily by the need to build base stations at brand new cell sites. The business of most operators would not be driven by pure coverage considerations.

Fourth, empirical data confirms our conclusions that the KL Paper greatly overstates the frequency dependent cost differences in deploying spectrum. As noted, the KL Paper predicts that high-frequency spectrum will require many times the number of cell sites compared to low-frequency spectrum. Based upon our review of relative cell site counts throughout the top 100 CMAs, which account for nearly two-thirds of the U.S. population (almost 200,000,000 people), however, AT&T (the operator with the highest average holdings of low-frequency spectrum) typically has more cell sites than Sprint (the operator with the highest average holdings of high-frequency spectrum). These empirical data also show that AT&T has as many as or more cell sites than T-Mobile, which currently operates networks on *only* high-frequency spectrum, in half of the top 100 CMAs, and that in CMAs where T-Mobile does have more cell

sites, it typically has only 20 to 30 percent more, not several times more as the KL Paper's formulas would predict. The empirical data on the number of cell sites encountered during the drive tests highlights the gross inaccuracy of the predictions of the simplified analysis of the KL Paper.

The remainder of this paper is organized as follows.

In Section 2, we address various overarching conceptual flaws with the approach used by the KL Paper that greatly inflate its estimated relative costs of deploying high- and low-frequency spectrum. We show that the KL Paper fails to account for the many non-propagation related characteristics of spectrum that contribute to value, ignores the fact that most network operators deploy mixed-spectrum networks which requires enough cell sites to support high-frequency spectrum, and that base station costs are unlikely to be a large contributor to value in most instances anyway because network operators typically already have base stations in most areas where new spectrum would be deployed.

In Section 3, we address the misguided argument that low frequency spectrum is inherently more competitively valuable in urban areas due to more favorable building penetration characteristics. We show that the KL paper overstates building penetration differences, erroneously focuses on absolute in-building signal levels rather than SINR, fails to account for the offsetting frequency-specific characteristics that give high-frequency spectrum in-building advantages, and fails to account for widespread and increasing use of small cell and other technologies used to address in-building performance in modern networks.

In Section 4, we address the incorrect argument that the relative propagation characteristics of high- and low-frequency spectrum result in much lower deployment costs (measured by the number of cell sites needed). We show that the KL Paper relies on an oversimplified model that overstates the benefits of propagation, and we confirm, using more sophisticated modeling tools and empirical evidence, that the relative number of cell sites computed by this simplified model greatly overstates the differences in the number of cell sites needed for high- and low-frequency deployments even in the KL Paper's purely hypothetical single band, coverage-only, green-field suburban and rural area scenarios.

In Section 5, we address the errors in the KL Paper's attempts to create a composite weighting scheme from the separate rural, suburban, and urban weights. This composite weighting scheme, which effectively treats New York City and Idaho the same, produces clearly incorrect results.

In Section 6, we address the fact that there is significant spectrum that is currently being used for mobile broadband services that should be part of the FCC's spectrum screen calculations, including spectrum in the AWS-4 and EBS/BRS bands. We also explain that H-Block, AWS-3, and 600 MHz spectrum bands should be added to the screen once the appropriate service rules are finalized and the auctions have been conducted. We further explain that Sprint's position that the FCC should exclude all or part of the EBS spectrum on the grounds that such spectrum is subject to certain potential impairments (*e.g.,* potential for coverage holes) would result in significant inconsistencies in the FCC treatment of spectrum. For example, Cellular and Lower

700 MHz A Block spectrum are subject to coverage gaps, but the FCC has included these bands in their entirety in the screen. If the FCC begins recognizing factors such as these as grounds for a discount, consistency would require the FCC to re-examine every band and impose similar discounts for all suitable and available spectrum. Finally, we explain that if the FCC does employ a weighted spectrum screen that is premised on relative numbers of cell sites required to deploy spectrum in a real network, it should not weight the Lower 700 MHz D and E blocks as "low-frequency" that requires fewer cell sites. The unpaired Lower 700 MHz D and E Block spectrum is typically suitable only for supplemental downlink capacity when bonded with high-frequency spectrum such as 2.1 GHz AWS spectrum. Hence, under Sprint's weighting theory that uses weights reflective of theoretical maximum cell sizes, lower 700 MHz D and E Block spectrum should have a maximum weight that is no higher than that given to the high frequency spectrum with which it is bonded.

2. CONCEPTUAL FLAWS WITH THE ANALYSIS PRESENTED IN THE KL PAPER

The KL paper computes the relative costs of deploying high- and low-frequency spectrum based entirely on the estimated number of base stations that would be needed to deploy a network using each spectrum frequency band in a hypothetical single band, purely coverage-driven, green-field deployment.[3] As the KL Paper states, the "metric use[d]" to compute relative competitive values of high- and low- frequency spectrum is "the number of base stations required to meet the coverage and penetration requirements in different propagation environments."[4] From a wireless engineering standpoint, this approach is conceptually flawed and is not a valid method for ascertaining spectrum values in commercial deployment scenarios.

2.1. The Various Factors That Affect Spectrum Value

The relative number of base stations that must be deployed for high- and low-frequency spectrum is only one of many factors that affect the cost of deploying spectrum, and other factors favor high-frequency spectrum. The KL Paper ignores these other factors and thus significantly exaggerates any actual relative cost differences when deploying high- and low-frequency spectrum.

First, a network operator typically would place a higher value on spectrum that is compatible with spectrum already deployed in its network because it is usually much more efficient to

---

[3] A coverage-driven deployment simply ensures a high probability that a user at the cell edge is able to connect with a minimum target quality of service. Such a deployment is inadequate where the population density is relatively high (or expected consumer demand is otherwise relatively high) because limited base station resources would need to be shared among multiple simultaneously active users, degrading the user experience. In practice, both coverage and quality of service at expected peak demand must be considered to ensure a satisfactory user experience. A green-field deployment means that no legacy infrastructure exists and brand new cell sites and related infrastructure must be built from scratch.

[4] KL Paper, at 7.

deploy compatible spectrum frequency bands than entirely new ones that are widely separated from the existing ones. A network operator that has an existing AWS network but no 700 MHz facilities, for instance, may place greater value on AWS spectrum than on 700 MHz spectrum in a given area, because the network operator can integrate additional AWS spectrum into its network at a lower cost and, importantly, can ensure backward compatibility with the AWS-compatible devices used by its existing customer base.[5]

Second, network operators typically place a significant premium on spectrum that is available in large contiguous blocks, because mobile broadband services can typically make much more efficient use of large contiguous blocks of spectrum.[6] Higher-frequency spectrum is typically available in larger contiguous blocks than lower-frequency spectrum, which is a factor that increases the valuation of high-frequency spectrum relative to low-frequency spectrum.[7]

Third, the value of low-frequency spectrum may be discounted relative to higher-frequency spectrum – especially in areas where small cells are needed to meet high capacity demands – to account for inter-cell interference issues. In a cellular network using technologies such as LTE, adjacent cells use the same radio channel (*e.g.*, a 10 MHz channel within the 700 MHz band for LTE). It is therefore important that networks are designed in a manner that minimizes the

---

[5] For example, additional RF filters, duplexers, and antennas would be needed to support an additional 700 MHz frequency band, while the same RF filters, duplexers, and antennas would suffice in the existing and new devices and base stations for the AWS band. The legacy AWS devices would be able to exploit the added AWS spectrum without any hardware change. In contrast, legacy devices configured for AWS spectrum could not take advantage of the new 700 MHz spectrum.

[6] For example, LTE can be deployed much more efficiently with large, contiguous spectrum blocks. LTE supports channel bandwidths of up to 20 MHz, and LTE-Advanced will support total channel bandwidth as wide as 100 MHz. LTE uses scalable Orthogonal Frequency Division Multiple Access (OFDMA) that provides larger cell throughput (and end user throughput) for larger bandwidths. Narrower channel bandwidth is one of the main reasons why most current and planned near term LTE deployments cannot realize the full potential of LTE. Furthermore, a contiguous bandwidth of a certain size is more efficient than two non-contiguous channels that total the same size. The use of contiguous blocks permits the network operator to allocate less spectrum to overhead and support. For example, if a network operator deploys two separate LTE channels, some overhead – such as synchronization signals, the physical broadcast channel, and system information – would be effectively duplicated on two channels, thus reducing the achievable throughput.

[7] Larger contiguous blocks also have other benefits. For a given number of users generating a given amount of traffic, a low-frequency network with smaller total channel bandwidth would be loaded more than a high-frequency network with relatively larger total channel bandwidth. That loading difference means that the amount of interference relative to the thermal noise floor would be less for the high-frequency network and hence the target throughput could be achieved more easily.

extent to which signals generated from a base station in one cell extend into another cell.[8] The signal(s) from the base station(s) in the adjacent cell(s) constitute interference, and excessive interference results in degraded throughput and decreased capacity.

As a general matter, mitigating inter-cell interference is more challenging for low-frequency deployments, because low-frequency spectrum propagates farther than high-frequency spectrum and thus is more likely to enter adjacent cells at higher signal levels. To mitigate inter-cell interference, network operators tune various parameters of their network (*e.g.,* antenna down-tilting or power reduction). Because more extreme mitigation measures are often needed to mitigate inter-cell interference for low-frequency networks, it will more often be the case that the limits of mitigation techniques will be reached before inter-cell interference is sufficiently mitigated, and in these instances, low-frequency networks are subject to greater interference than high-frequency networks. As network operators continue to expand and rely more heavily on "small cell" technologies, these inter-cell interference considerations become even more important, because small cells are subject to interference from, and can cause interference to, both macro cells and other small cells. These factors tend to reduce the value of low-frequency spectrum relative to high-frequency spectrum, especially as cell sizes decrease.

Fourth, high-frequency spectrum has significant advantages over low-frequency spectrum in terms of the ability to implement and achieve the maximum benefits from advanced LTE technologies that significantly increase throughput and reliability. For example, the benefits of Multiple Input Multiple Output (MIMO) systems – which permit greater capacity and reliability – increase substantially as the number of antennas deployed in base stations and mobile devices increases. High-frequency spectrum requires much smaller antenna elements than low-frequency spectrum, which means that high-frequency deployments can more effectively implement higher order MIMO systems – *i.e.,* systems with more antennas – thus allowing high-frequency deployments to support greater capacity with fewer cells sites (both macro and small cells). Note that higher-frequency signals permit the use of more antenna elements for any given antenna size, which can lead to significant antenna gain advantages, which provides further benefits, including further enhancing MIMO performance.

Fifth, a single duplexer can cover a far greater range of high-frequency spectrum than low-frequency spectrum. As a result, network operators using high-frequency spectrum may be able to use fewer duplexers than network operators using low-frequency spectrum.[9] This is

---

[8] In Release 8 LTE, which has been widely deployed in commercial cellular networks, a device has one serving cell that provides the desired signal to the device. Signals from all other cells in the vicinity of the device constitute interference and will interfere with the device's ability to communicate with the base station of the serving cell, resulting in degraded throughput and decreased capacity.

[9] A typical duplexer can support bandwidth of up to 4% of the carrier frequency. Hence, a duplexer operating at high-frequency spectrum can support larger bandwidth compared to a duplexer operating at low-frequency spectrum. Depending upon the exact bandwidth that an

especially true as the range of available low frequency spectrum expands to the 600 MHz range. Each duplexer also creates insertion loss and increases power consumption. The need for fewer duplexers can thus increase the relative value of high-frequency spectrum to low-frequency spectrum.

Sixth, high-frequency spectrum that is used internationally (*e.g.,* AWS and 2.5 GHz) can have significant advantages relative to low-frequency spectrum that is used only in the U.S. (*e.g.,* 700 MHz). Frequencies that are used internationally can benefit from lower equipment costs associated with economies of scale, faster-paced development and implementation of new technologies and corresponding standards, and more efficient international roaming solutions.

Seventh, the value of spectrum in a particular band can be significantly impacted by regulatory or other limitations on the use of that spectrum that are independent of propagation characteristics. For example, 700 MHz D and E Block spectrum is unpaired and thus cannot be used as base spectrum for two-way mobile wireless services in frequency division duplex ("FDD") deployments.[10] Rather, that spectrum is effectively limited to supplemental downlink capacity for FDD-based networks through the use of recently developed carrier aggregation bonding technologies. In addition, due to interference issues, Lower 700 MHz D and E Block spectrum can only be bonded to high-frequency spectrum (AT&T, for example, plans to bond it to AWS spectrum) in typical currently available commercial products. Therefore, for all practical purposes, a network operator must treat D and E block spectrum as if it had the propagation characteristics (and limits) of the high-frequency spectrum to which it is bonded in establishing the cell grid on which that spectrum will be deployed.

Eighth, other regulatory requirements can also have a significant impact on a network operator's valuation of spectrum. For example, as we understand the FCC's build-out requirements, 700 MHz A and B block licensees are required to build out a network that covers 35 percent of the *geographic area* where the spectrum licenses are held within 4 years, and 70 percent of the geographic area by the end of the lease term.[11] By contrast, the FCC's rules for some high-frequency spectrum bands require only that the network operator offer "substantial service" by the end of the licensed term, which can be 10 or more years.[12] These differences can result in higher costs for low-frequency spectrum license holders than for high-frequency spectrum license holders. Likewise, we understand that cellular 850 MHz spectrum is subject to

---

operator needs to support, more duplexers may therefore be necessary in case of low-frequency spectrum.

[10] While a time division duplex (TDD) network could potentially be deployed in unpaired spectrum, spectrum plans, existing networks, and the availability of commercial products usually dictate the deployment of a frequency division duplex (FDD) network.

[11] *See* 47 C.F.R. §27.14.

[12] *See id*.

special "Maximum ERP," "Height-power," and "out of band emissions" limitations that have the effect of reducing power limits for this spectrum.[13]

2.2. Spectrum Value When Networks Use Both High- And Low-Frequency Spectrum

Even if spectrum value were determined solely by propagation characteristics as the KL Paper erroneously assumes, the KL Paper still greatly exaggerates the difference in the number of cell sites that that network operators would use in any real-world deployment. The KL Paper ignores that U.S. network operators today usually have a *mix* of low and high-frequency spectrum. From a wireless engineering standpoint, the most efficient way to deploy multiple bands of spectrum in a single network is to build a cell site grid that facilitates a near one-to-one overlap of coverage for all spectrum frequency bands (to the extent possible). In other words, a network operator that deploys both 700 MHz and AWS (1700/2100 MHz) bands will typically prefer to deploy a cell grid to ensure full (or nearly full) coverage using the AWS spectrum, even if fewer cell sites could have been used for a 700 MHz-only deployment. Network operators typically engineer their networks in this way because it greatly simplifies network engineering (thus reducing costs), and because it provides greater network performance. Absent a near one-to-one overlap of different spectrum frequency bands, a network operator would be forced (i) to invest more RF engineering efforts in troubleshooting and (ii) to manage more complex and performance-degrading handovers between spectrum frequency bands, which would redirect network resources – including bandwidth – away from customers and significantly increase network engineering and management costs.[14]

2.3. The Need For New Cell Sites For New Spectrum

---

[13] *See* 47 C.F.R. §§ 22.913, 22.917.

[14] A network that failed to reflect this design principle would require devices to switch frequently between the high-frequency spectrum and the low-frequency spectrum as they move between the areas that are served by both frequencies and the areas served by only one of the frequencies. Managing such inter-frequency handovers would require more overhead compared to intra-frequency handovers, thus resulting in sub-optimal use of the spectrum. A single-receiver LTE device (or User Equipment ("UE")) can be present on only one carrier frequency at a time. To enable a UE to move seamlessly across different carrier frequencies, LTE allows the eNodeB (*i.e.,* the LTE base station) to configure a UE with a measurement pattern that includes a gap during which the UE being served on a carrier frequency, say frequency "fx", can make measurements of a different carrier frequency, say frequency "fy". During such gaps, the UE is absent from the air interface of the serving frequency fx and no uplink or downlink data transfer can occur. The average throughput is thus lower compared to the intra-frequency scenario that does not need any such measurement gaps. Two measurement patterns are defined in LTE with the same gap of 6 ms but with two different measurement cycles of 40 ms and 120 ms. The "overhead" is thus 5% or 15% depending upon the configured measurement cycle, and throughput is reduced approximately by these amounts. Since the UE needs to switch between the frequencies, it would also consume more processing power.

The premise of the KL Paper is that network operator valuations of spectrum are driven mainly by the green-field costs of building and operating base stations needed to deploy that spectrum. But base station costs could only be a primary driver of spectrum valuation if an operator would have to build all new base stations when deploying new spectrum. In the real world, network operators typically already have all or most of the cell sites needed to support newly acquired spectrum and network engineers will seek to maximize the reuse of those existing cell sites. Consequently, valuation of spectrum is rarely likely to be driven primarily by the cost of building new base stations. Even in cases where a network operator does not have the required base stations in a particular area, in many instances the network operator will be able to collocate its equipment at *existing* base stations owned by other network operators or by leasing companies. The network operator will need to build new base stations at new cell sites only where deploying the new frequency band on existing sites leads to coverage holes (or capacity constraints) or where collocation at existing base stations is not feasible (*e.g.*, because of space or weight limitations on the tower). Thus, in most instances, it is simply not correct that a network operator's valuation of spectrum will be driven predominantly by the need to build and operate new base stations at new cell site locations.

3. THE RELATIVE VALUE OF SPECTRUM IN URBAN AREAS

In urban environments, cell size – and hence the number of cell sites needed to meet the desired quality of service – is typically driven by demand for capacity and throughput, not by the link budget-dictated propagation path loss. To meet the demand for capacity and throughput in urban areas, cell sizes must be small, which negates any propagation benefits of low-frequency spectrum related to the required number of base stations, because essentially the same number of cell sites have to be used, regardless of frequency, to meet QoS performance targets. For example, consider an area that could be covered by one low-frequency cell site or by two high-frequency cell sites. If the demand for capacity exceeds that which can be provided using one cell site, the low-frequency network will have to deploy a second cell site, thus negating any propagation advantage – two cell sites will be used for both the low- and high-frequency deployments due to the need to meet capacity demands.

The KL Paper acknowledges this fact,[15] and thus presents an alternative theory as to why a network operator using high-frequency spectrum might deploy more cell sites in urban environments than a network operator using low-frequency spectrum. The KL Paper argues that low-frequency spectrum is better at penetrating buildings compared to high-frequency spectrum, and that a network operator using high-frequency spectrum will thus require more cell sites to achieve equivalent indoor quality of service (QoS) compared to a network operator using low-frequency spectrum.[16] In making this argument, the KL Paper uses a formula that

[15] KL Paper, at 11-13.

[16] KL Paper, at 11 & n.23 ("[t]he difference in building penetration capability among spectrum bands translates into a requirement for more intensive deployment of higher frequency (mid-band and high-band) urban cell sites to maintain an equivalent indoor coverage as a low-band network.").

assumes a uniform relationship between spectrum frequency ("f") and the reduction in power level (measured in dB) when penetrating buildings: (Penetration Loss) = -15.8+7.15log(f). The KL Paper thus assumes that high-frequency signals will be significantly weaker than low-frequency signals in *all* buildings and then assumes that the high-frequency operator would respond by adding many more costly macro cell sites.

There are several flaws with this analysis. As we explain below, there is no such fixed relationship between spectrum frequency and building penetration, and, in fact, high-frequency spectrum penetrates some common building types *better* than low-frequency spectrum. There is also no engineering basis to conclude that high-frequency building penetration will be uniformly so poor as to require remediation even with respect to building types where low-frequency spectrum does have penetration advantages. And there is likewise no engineering basis to conclude that any operator would respond to in-building coverage issues in a subset of buildings with a network design that required doubling or tripling the number of cell sites.

For example, the KL Paper's formula predicts that a network operator using PCS (1900 MHz) spectrum would need to deploy twice as many cell sites in an urban area than a network operator using Lower 700 MHz spectrum. The notion that an efficient network operator using PCS spectrum would need to use double the number of cell sites compared to a Lower 700 MHz deployment in an urban area is not credible. As the KL Paper acknowledges, in urban areas, cell sizes are very small, which means that there will be cell sites very close to most buildings. As a result, in the vast majority of buildings, signal levels and signal to interference plus noise ratios (SINRs) will be sufficient to achieve desired QoS levels for both high- and low-frequency deployments. Differences in building penetration levels become an issue only closer to cell edges. And, for these buildings, there are far more efficient ways to address building penetration issues that might arise, including the use of in-building technologies, as we discuss below.

3.1. The Relative Ability Of High- And Low-Frequency Spectrum To Penetrate Buildings

There is no established formula for computing penetration loss for buildings that is based solely on frequency, as the KL Paper suggests. To the contrary, empirical studies and lab tests have confirmed time and again that building penetration loss is a problem for both high- and low-frequency spectrum, and its relative impact on high- and low-frequency spectrum deployments depends largely on the *type of construction materials* used in the relevant buildings. In fact, these studies show that for some common construction materials – and, in particular, construction materials typically used in urban areas – high-frequency spectrum can be better at penetrating buildings than low-frequency spectrum. Thus, the KL Paper's assumption that low-frequency spectrum will always have an advantage in penetrating buildings is not true.

The KL Paper cites to a report by the Communications Research Centre Canada Canada titled *Comparison of Radio Propagation Characteristics at 700 and 2,500 MHz Pertaining to Macrocellular Coverage* ("CRCC Report"). According to the KL Paper, the CRCC Report "shows that residential building penetration losses are estimated to be about 4 dB greater at the highest frequency commercial mobile band (2.5 GHZ) than the lowest frequency commercial

mobile band (lower 700 MHz)."[17] In fact, the CRCC Report explains that empirical studies and lab tests have shown that penetration loss for high- and low-frequency spectrum is "almost the same" for the materials typically used in residential buildings, with the exception of two material types, *i.e.,* "red brick" and "cinder block."[18] More importantly, however, the KL Paper ignores that the CRCC Report also explains that studies have shown that the types of materials typical in *urban buildings* (including in high-rise urban residential buildings) are different than the materials used in residential buildings, and that, for these common urban materials, higher-frequency signals can actually experience *less* penetration loss than lower-frequency signals:

> [These urban buildings] are often of steel-framed construction, and the corresponding predominant building materials are reinforced concrete, steel, and aluminum; loss through these materials is relatively much higher, and the dominant penetration mode is through slots such as windows and other frame openings, or even through grid openings in steel-reinforced concrete slabs. Losses associated with propagation through slots tend to be strongly frequency-selective, and overall decrease with increasing frequency, as the slot dimensions become larger in terms of wavelength.[19]

In quantitative terms, as shown in Table 5 of the CRCC Report, some studies have shown that, for the types of materials that dominate urban areas, 2.5 GHz spectrum can experience about 4.3 dB or 37% *less* signal penetration loss compared to 700 MHz spectrum.[20]

A number of other studies have also found that high-frequency spectrum can experience less building penetration loss than low-frequency spectrum. A 1992 study measured the average building penetration loss at the ground floor of buildings to be 14.2 dB at 900 MHz, 13.4 dB at 1800 MHz, and 12.8 dB at 2300 MHz.[21] A 1993 study examined building penetration loss in Philadelphia, Pennsylvania, and found that the average building penetration loss was 19.2 dB at

---

[17] KL Paper, at 12, n.26.

[18] CRCC Report, at 24.

[19] CRCC Report, at 24-25; *see also id.* at 24 ("several researchers have reported measurements indicating that building penetration loss decreases with increasing frequency"); *id.* ("Apparently conflicting results have been reported in the literature concerning the dependence of building penetration loss on frequency [13–15]. While several researchers have reported measurements indicating that building penetration loss decreases with increasing frequency in the VHF and UHF range [14], results by other researchers suggest the opposite, for example see [13, 16–18], or that there is no significant dependence on frequency at all [11].").

[20] CCRC Report, at 25.

[21] A. F. de Toledo and A. M. D. Turkmani, "Propagation Into And Within Buildings At 900, 1800, And 2300 MHz," IEEE 42nd Vehicular Technology Conference, pp. 633- 636 (May 1992).

880 MHz and 15.7 dB at 1922 MHz.[22] And an earlier 1987 study in Liverpool, England found building penetration loss to be 16.4 dB at 441 MHz, 11.6 dB at 896.5 MHz, and 7.6 dB at 1400 MHz.[23]

We do not suggest that low-frequency spectrum will never penetrate urban buildings better than high-frequency spectrum, but an analysis that assumes that low-frequency spectrum will *always* experience materially lower penetration loss, as the KL Paper does, is not supportable.

3.2. The KL Paper's Failure To Account For SINR

The KL Paper also erroneously assumes that in buildings where low-frequency spectrum penetrates more effectively than high-frequency spectrum, a low-frequency deployment will necessarily produce a higher in-building QoS than a high-frequency deployment. This is also incorrect and reflects fundamental wireless engineering errors.

First, the KL Paper incorrectly assumes that QoS levels are driven by the absolute power levels of in-building signals. In fact, QoS in mobile wireless networks is typically governed by the SINR, *i.e.,* the *ratio* of power of the desired signal to the power of the undesired signals. Therefore, even in cases where high-frequency signals achieve lower absolute in-building signal levels than low-frequency signals, that fact alone does not determine which network will achieve better in-building QoS, because that depends also on the relative levels of *undesired* signals in the building. If the materials of a particular building are "more porous" (*i.e.,* permit less penetration loss) to low-frequency signals, then the low-frequency deployment will experience higher levels of both desired and undesired signals. At the same time, the high-frequency network will experience lower levels of both the desired and undesired signals. Because the SINR is the ratio of the power of the desired signal to the power of the undesired signals, the SINR for both deployments could be quite similar. By focusing solely on absolute in-building power levels and ignoring SINR levels, the KL Paper offers no basis for concluding that low-frequency deployments systematically offer better in-building performance even in all buildings that are more porous to low-frequency signals.

Second, the KL Paper ignores important frequency-dependent benefits of high-frequency spectrum that have the potential to mitigate or even fully offset relative penetration losses of the magnitudes suggested in the KL Paper. Higher-frequency signals have smaller wavelengths and therefore require smaller antennas, which can lead to significant antenna gain advantages. An antennas is comprised of multiple antenna elements. Increasing the number of antenna elements results in greater antenna gain, and thus increases its range. As a matter of physics, higher-frequency spectrum requires smaller antenna elements, which means that more antenna elements can be used in a given antenna size for high-frequency spectrum compared

---

[22] William J. Tanis II and Glenn J. Pilato, "Building Penetration Characteristics of 880 MHz And 1922 MHz Radio Waves," IEEE 43rd Vehicular Technology Conference, pp. 206-209 (May 1993).

[23] A. M. D. Turkmani, J. D. Parson, and D. G. Lewis, "Radio Propagation Into Buildings at 441, 900, and 1400 MHz," Proceedings of 4th International Conference on Land Mobile Radio (December 1987).

to low-frequency spectrum. As a result, high-frequency deployments can achieve higher antenna gains – both at the handset and at the base station.

This engineering fact is confirmed by the specifications provided by suppliers of base station antennas. As the attached specification sheets show, the antenna gains for a six-foot antenna operating at 2.3 GHz offer 3 dB greater antenna gain than the same antenna operating at 700 MHz.[24] Similarly, 2-3 dB relative antenna gain increases can be expected from antennas contained within handsets.[25] Taken together, it is clearly possible to achieve cumulative increased gains of several dB for spectrum in the 2-2.5 GHz range compared to spectrum in the 700 MHz range. Consequently, even if it were true that high-frequency signals always experience about 4 dB more building penetration loss compared to low-frequency signals, as the KL Paper assumes, that building penetration loss could be easily offset by the high-frequency spectrum antenna gain advantages.

In addition, because higher-frequency spectrum requires smaller antenna elements than lower-frequency spectrum, the use of high-frequency spectrum allows for lower correlation of the signals being received by the antenna elements (*i.e.,* the antenna elements receive a greater diversity of signals). With modern technologies, this lower correlation can lead to higher SINRs and greater QoS. For example, when implementing antenna techniques such as transmit and receive diversity and spatial multiplexing, the use of smaller antennas and the corresponding reduced correlation may result in better overall performance. More scattering of the signals in the vicinity of the receive antenna and relatively independent fading of the signals on different antennas make such techniques perform better. For example, within the limited antenna space, the spatial multiplexing technique will be able to distinguish between two antenna signals carrying two independent streams of data better at a high frequency compared to a low frequency, resulting in fewer errors and hence higher throughput.

The smaller antenna elements needed for higher-frequency deployments also permit significantly increased beamforming gain relative to low-frequency deployments, thus providing higher-frequency deployments with improved relative SINR and greater throughput. In a traditional 120° sectorized network, the signal for a given cell or sector is transmitted (and received) in a geographic area covering 120° around a base station. Beamforming helps focus

---

[24] These examples show: (i) The antenna gain is 18.3 dBi for 2300-2360 MHz and 14.5 dBi for 698-806 MHz (COMMSCOPE, SBNHH-1D65B Andrew Tri-band Antenna, Details, *available at* http://www.commscope.com/catalog/andrew/product_details.aspx?id=3766 (last visited Mar. 7, 2014)); and (ii) The antenna gain is 18 dBi for 2110-2170 MHz and 15.3 dBi for 698-806 MHz (Kathrein Scala Division, 800 10765V01 Dual Band Broadband 6', 65 Degree Antenna, Details, *available at* http://www.kathrein-scala.com/catalog/80010765V01.pdf (last visited Mar. 7, 2014)).

[25] While the handset uses an omni-directional antenna with the ideal gain of 0 dBi, the antenna provides the highest "gain" at one frequency and lower "gains" at all other frequencies. When the antenna is tuned to maximize its efficiency at high frequency (and it should be tuned that way), its relative gain is lower at a lower frequency.

signal energy in a given direction. Transmit beamforming involves transmission of properly phase-shifted signals from antenna elements such that the signals get added in phase at the receive antenna, significantly increasing the received signal energy compared to the interference energy, resulting in higher SINR. And, higher SINR directly translates into larger throughput because more efficient modulation and coding scheme combinations can be exploited. Receive beamforming involves combining of properly phase-shifted received signals, and more antenna elements help capture more energy from the received signal, leading to higher SINR and larger throughput. As noted, for a given antenna size, high-frequency deployments allow for the use of more antenna elements. The existence of more antenna elements enables more signals to be transmitted or received for beamforming, thereby increasing the achievable SINR and throughput.

Higher-frequency spectrum also permits greater capacity and throughput using MIMO systems, which tend to be more effective in multipath-rich environments (*e.g.*, small cells in urban areas) due to the diversity of multipath sources and the ability to support multiple antennas at the base station and on the handset with reduced spacing needed between antennas at a high frequency.[26] As noted, in urban areas, the signals received at antennas in a small form-factor mobile device are relatively less correlated for high frequencies than for low frequencies. MIMO performance can thus be better at a higher frequency than at a lower frequency, resulting in greater QoS, including greater throughput.

The KL Paper also fails to account for inter-cell interference, which is one of the most significant disadvantages of using low-frequency spectrum in small cell urban environments. In a cellular network using technologies such as LTE, UMTS, 1xRTT, and 1xEV-DO, adjacent cells use the same radio channel (*e.g.*, a 10 MHz channel within the 700 MHz band). It is therefore important that networks are designed and optimized in a manner that minimizes the extent to which signals generated from a base station in one cell extend into another cell. Inter-cell interference can be a problem for both low-frequency and high-frequency deployments, but as a general matter, it is a more challenging issue for low-frequency deployments because low-frequency signals typically propagate farther than high-frequency signals. To mitigate inter-cell interference, network operators tune various parameters of their network, including increasing down tilts for base station antennas and reducing effective transmission power. These measures, of course, also reduce the signal levels throughout the areas, which means that low-frequency deployments illuminate the outside walls of buildings with less power than would otherwise be the case, resulting in weaker in-building signals, especially in "vertical" cities like New York where antenna down tilting required to mitigate inter-cell interference can severely reduce the power levels illuminating higher floors.

3.4. The KL Paper's Failure To Account For Small Cells

[26] *See* Real Wireless, "4G Capacity Gains," pp. 46-50 (January 27, 2011), available at http://stakeholders.ofcom.org.uk/binaries/research/technology-research/2011/4g/4GCapacityGainsFinalReport.pdf.

As noted, even for buildings where high-frequency deployments experience sufficiently more penetration loss to have an appreciable difference in achievable QoS, the KL Paper incorrectly assumes that a network operator would deploy new macrocell sites to improve indoor QoS. There are several more effective ways to address performance issues in particular buildings. Most notably, there are numerous solutions, including Wi-Fi, femtocells, indoor distributed antenna systems (also called iDAS), picocells, and repeaters/relays, to name just a few. In some cases, these solutions cost a fraction of deploying a full macro site and are typically far more effective at addressing specific small-scale coverage or capacity gaps in a network. In this regard, we note that in the cover letter that Sprint submitted with the KL Paper, Sprint cites two studies in support of the assertion that "the majority of mobile wireless traffic now occurs indoors."[27] But the main point of both of these studies is that there are far more effective ways to handle this indoor traffic than adding macro cells. One of the studies explains that femtocells are a far more effective way to handle indoor coverage issues than adding a macro cell site.[28] The other study identifies Wi-Fi as a far more effective way to achieve desired indoor performance compared to adding macro sites.[29]

Network operators do, in fact, widely use these much more effective small cell solutions as a substitute for deploying macro sites to address both indoor and outdoor demands for wireless services. According to the Small Cell Forum, small cells are being deployed at a rapid pace with the number of small cells having overtaken the total number of macrocells between October 2012 and November 2012.[30] Another analyst report forecasts that, by 2017, unit shipments of macro cells will be 1.4 million compared to 5 million small cells, and 11.5 million Wi-Fi access points.[31] Both AT&T and Sprint have deployed over one million femtocells.[32] Furthermore,

---

[27] *See* Sprint Cover Letter, at 8 n. 19.

[28] *See* Femto Forum, "Femtocells—A Natural Solution for Offload," (June 2010), *available at* http://www.4gamericas.org/documents/016+Femtocells+Natural+Solution+for+Offload%5B1%5D.pdf.

[29] *See* Cisco, "Cisco Service Provider Wi-Fi: A Platform for Business Innovation and Revenue Generation" (2012), *available at* http://www.cisco.com/en/US/solutions/collateral/ns341/ns524/ns673/solution_overview_c22-642482.pdf.

[30] Informa Telecoms & Media, "Small Cell Market Status," at 3 (Feb. 2013), *available at* http://www.smallcellforum.org/smallcellforum_resources/pdfsend01.php?file=050-SCF_2013Q1-market-status%20report.pdf.

[31] ARC Chart Research, *HetNet Market Summary and Forecasts: Macro Cells, Small Cells & Wi-Fi Offload* (Oct. 2012), *available at* http://www.marketresearch.com/ARCchart-v3117/HetNet-Summary-Forecasts-Macro-Cells-7176777.

[32] Informa Telecoms & Media, "Small Cell Market Status," at 3 (Feb. 2013), *available at* http://www.smallcellforum.org/smallcellforum_resources/pdfsend01.php?file=050-SCF_2013Q1-market-status%20report.pdf.

Sprint is also clearly relying largely on Wi-Fi technologies for indoor capacity needs – indeed, it recently added Wi-Fi calling to its service options.[33]

4. THE RELATIVE VALUATION OF SPECTRUM IN RURAL AND SUBURBAN AREAS

The KL Paper assumes that in rural and suburban areas, unlike urban areas, the relative number of cells sites for high- and low-frequency spectrum will be driven solely by "coverage" considerations and not by capacity considerations. Specifically, the KL Paper asserts that, in rural and suburban areas, the relative number of cell sites needed for high- and low-frequency deployments is determined solely by the frequency-specific "path loss" characteristics of the spectrum being used in the network. The KL Paper then correctly acknowledges that "[e]mpirical models for estimating path loss (*i.e.*, propagation or path loss models) do not fully cover the range of frequencies used for commercial mobile broadband, which range currently from 700 MHz through 2.7 GHz."[34]

Notwithstanding that the KL Paper concedes that no single model can be used to correctly engineer both low and high-frequency networks, the KL Paper goes on to use a single "simplified" path loss model that the KL Paper contends is consistent with the "Lee model," (which was developed in 1980s for 900 MHz spectrum), to compute the number of cell sites that would be needed for each spectrum frequency band. There are numerous fundamental flaws with this approach.

First, the entire premise of this analysis is incorrect. It is not true that the number of cell sites (*i.e.,* cell density) in suburban areas, as defined in the KL Paper, is driven entirely by coverage considerations. The KL Paper defines suburban areas to be census tracts with population densities lower than 10,000 people/square mile. By that definition, about half of downtown Washington D.C., most of downtown Atlanta, GA, parts of New York City, and many crowded commuting corridors, airports, train stations, and other areas where cell density is clearly capacity driven are incorrectly defined to be coverage-driven "suburban" areas under the KL Paper's analysis.

Even outside cities, the KL Paper's analysis fails to recognize that many areas considered to be "suburbs" have very high capacity demands that require high cell densities. Many suburbs, including for example large suburbs of Washington, D.C., such as Alexandria, VA, Arlington, VA, Silver Spring, MD, and Bethesda, MD are highly populated areas where cell density is driven by demand for capacity, not the need to deploy the minimum number of cell sites simply to cover an area (doing so would lead to many unhappy customers in these areas, as it would result in blocked or dropped calls and very low data throughput). The KL Paper concedes that in areas where cell site deployment is driven by capacity, not coverage, there will be little difference in the number of high- and low-frequency cell sites. Thus, by incorrectly categorizing a number of

---

[33] Voice over LTE (VoLTE) can support seamless transitions between wi-fi networks and mobile macro cell networks.

[34] KL Paper, at 8.

capacity-driven areas as coverage-driven areas, the KL Paper greatly overstates the overall relative number of additional cell sites needed for high-frequency deployments.

Second, even for the subset of "suburban" and "rural" areas where cell density is coverage driven, the KL Paper's use of the simplified propagation model overstates how many additional cell sites are needed for high-frequency deployments relative to low-frequency deployments. The model used in the KL Paper assumes that the number of cell sites that must be deployed in a coverage-driven deployment is determined solely by the frequency-specific propagation characteristics of desired signals of the spectrum. As a result, the simplified model fails to account for the many other characteristics of spectrum that also significantly affect the relative number of cell sites needed for high- and low-frequency deployments.

As we discussed above, there are many frequency-dependent characteristics of high-frequency spectrum that can significantly reduce the number of cell sites needed in a coverage deployment. For example, high-frequency networks, because they can use smaller antenna elements, can achieve higher antenna gain, make more efficient use of beamforming, and achieve greater benefits from receive diversity, spatial multiplexing, and MIMO technologies. The simplified path loss model used in the KL Paper does not account for these frequency-specific benefits of high-frequency spectrum, or the myriad other important factors that determine the number of cell sites to be deployed in any particular area, and thus overstates the difference in the number of cell sites that must be deployed.

In the real world, to engineer coverage-driven deployments, network operators use complex network planning and design tools that (i) use propagation models specifically calibrated for the relevant frequency and the topology and (ii) reflect differences in antenna gains, spatial separation, antenna patterns, and numerous other frequency-specific factors, as well as geographic characteristics, such as clutter (*e.g.*, buildings, trees, etc.) and terrain detail (*e.g.*, mountains). And network engineers then analyze the results of these tuned models to account for real-world limitations, including the feasible height of the base stations, the feasible locations of the base stations, the need to cover (or not cover) particular areas (*e.g.*, lakes), and potential interference from other transmission sources. In addition, these network planning and design tools are configured to account for the capabilities of the antennas and wireless equipment that are actually available to be deployed in the network.

To demonstrate the extent to which the KL Paper's reliance on the oversimplified propagation path loss model overstates the relative number of cell sites in rural areas, we worked with AT&T engineers to model hypothetical green-field deployments using Atoll, which is the RF planning and design software that AT&T uses in the ordinary course of business to design and engineer radio networks. We asked AT&T's engineers to use Atoll to engineer three LTE networks: (1) a lower 700 MHz network; (2) an AWS network; and (3) a 2.5 GHz network. In addition, we requested that each of these networks be modeled in a rural area (as defined in the KL Paper, *i.e.,* less than 100 people per square mile). The network was designed for about a 500 square-mile area in Georgia.

In addition to the parameters described above, we asked AT&T to make various assumptions made by the KL Paper that inflate the difference between the number of cell sites for low- and high-frequency deployments to ensure an apples-to-apples comparison could be made. For example, AT&T does not engineer networks merely to achieve cell-edge coverage in a given area. Rather, AT&T engineers its networks to achieve a given QoS in the area, which requires more cell sites for low-frequency deployments than strictly required for bare coverage, thus reducing differences between low- and high-frequency deployments. Nonetheless, we asked AT&T to account only for coverage, not QoS,[35] to ensure that the network designed by AT&T's engineers using the Atoll tool best matches the (unrealistic) parameters used in the KL Paper. We also asked AT&T to ignore the fact that AT&T already has legacy base stations. Instead, we asked AT&T to assume that it would have to build all of its base stations from scratch, as the KL Paper (erroneously) assumes.

The results of this Atoll analysis confirm that (even under these extreme and unrealistic assumptions) the KL Paper's application of the simplified path loss model substantially overstates the relative number of cell sites that would be needed for a coverage-driven deployment in rural and suburban areas. According to the KL Paper, an AWS (high frequency) deployment in a rural area would require about 6 times more cell sites than a Lower 700 MHz network. The Atoll analysis, applied as described above, found that a coverage-only, green-field AWS network would require at most 2.7 times as many cell sites as a Lower 700 MHz network in a rural environment. Similarly, according to the KL Paper, a 2.5 GHz deployment in a rural area would require about 14 times more cell sites than a Lower 700 MHz network. The Atoll model, applied as described above, found that, given the additional antenna technology flexibility at high frequency, a coverage-only, green-field 2.5 GHz network would also require at most 2.7 times as many cell sites as a 700 MHz network.[36]

---

[35] To mimic a pure coverage-driven LTE deployment, we aimed for 90 percent cell-edge reliability for the average 70 kbps cell-edge throughput in the downlink for the purpose of calculating link budget. In a realistic network, other QoS metrics such as average cell throughput are also considered, and accounting for them would only further reduce the difference in the number of cell sites needed for high- and low-frequency deployments.

[36] The following Atoll configuration parameters are used for the LTE-based analysis. The 700 MHz deployment uses 2 transmit antennas and 2 receive antennas at the eNodeB. The AWS deployment uses 2 transmit antennas and 4 receive antennas at the eNodeB. Finally, the 2.5 GHz deployment uses 4 transmit antennas and 4 receive antennas at the eNodeB. The use of more antennas at higher bands is consistent with the antenna size limitations, commercial antenna availability, and AT&T design guidelines. For example, for a given antenna size, more antenna arrays can be placed at a higher-frequency band. There is a 3 dB link budget gain for 4 receive antennas compared to 2 receive antennas. Each transmit antenna uses a 30 watt power amplifier. The overall antenna length is 6 feet. Commercially available antennas are used for modeling and these antennas exhibit 2.5 to 3 dB higher gain at the AWS and 2.5 GHz bands compared to the 700 MHz band. Atoll's Standard Propagation Model is used. The percentage area exceeding the target RSRP (Reference Signal Received Power) threshold (as a

To be clear, these comparisons were done using assumptions that greatly understate the number of low-frequency cell sites that would actually be required in a real world deployment. For example, as noted, in a real deployment, AT&T would engineer its network to achieve a certain minimum QoS throughout the service area rather than only at the cell edge, which will require relatively more cell sites for a low-frequency deployment than the minimum needed just for the bare minimum cell-edge coverage. This point is very important. A pure coverage-driven network merely ensures that a signal will likely be available near the cell edge. It does not ensure that calls in a cell will not be dropped during peak usage, nor does it ensure the availability of high throughput levels. The coverage estimates also do not account for the fact that at certain times of day there may be spikes in demand – with a pure coverage build, the network likely will not be able to support those spikes resulting in blocked or dropped calls and very slow throughput. A real radio network design meets the target QoS requirements (e.g., average cell throughput) in the presence of expected traffic demands of a given area in addition to the cell-edge metrics.

In addition to reviewing real-world empirical data and the results of the complex network planning and design systems AT&T uses in the ordinary course of business, we have done our own calculations using other propagation path loss models that are more commonly used for the spectrum at issue here. The Hata model is the baseline model that we have used in our analysis. Commercial tools for the radio network planning, design, and optimization (*e.g.*, Atoll) often use the Hata model as the base model and include additional adjustments with tunable parameters. In Atoll, these parameters are then further tuned using actual drive-test propagation measurements so that the predictions of the propagation model accurately reflect the real-world measurements. As noted earlier, there is no single accepted model that can predict path loss for both low- and high-frequency mobile spectrum. Accordingly, we used the Okumura-Hata model to estimate path loss and hence cell size for Lower 700 MHz spectrum,[37] and we used the COST231-Hata model to estimate path loss and hence cell size for 1900 MHz PCS spectrum.[38] Using parameters that are well accepted by the industry,[39] these models

---

measure of coverage reliability) is 99.2% at 700 MHz, 99% at the AWS band, and 99.7% at the 2.5 GHz band. Reference Signal power boosting is assumed to be operational in all cases.

[37] The Okumura-Hata model is an empirical model that is based on actual measurements. It defines the path loss for the urban environment and provides correction or adjustment factors for rural and suburban environments. The Okumura-Hata model is valid from 150 MHz to 1500 MHz. *See* Theodore S. Rappaport, Wireless Communications: Principles and Practice, Prentice Hall, 2nd edition, 2002.

[38] The COST231-Hata model is applicable to the frequency range 1500-2000 MHz, and thus cannot be reliably used for WCS (2.3 GHz) or EBS/BRS (2.5 GHz deployments). This model is defined for the urban environment but can be extended to suburban and rural environment by using correction factors. *See* Theodore S. Rappaport, Wireless Communications: Principles and Practice, Prentice Hall, 2nd edition, 2002. In practice, model parameters are tuned based on actual propagation measurements.

predict that a green-field lower 1900 MHz network designed solely for coverage (and no cell capacity or throughput requirements) would require only about 2.5 times more cell sites in rural areas, not more than 7 times more cell sites, as predicted by the model used in the KL Paper.

Third, empirical evidence further confirms that the KL Paper's finding that high-frequency deployments require many times more cell sites than low-frequency deployments is incorrect. AT&T in the ordinary course of business regularly engages third parties to conduct hundreds of thousands of miles of drive tests to collect various metrics for AT&T's network, and for the networks of other operators. One of the metrics collected during these drive tests is the number of cell sites deployed. Accordingly, we can compare the number of cell sites deployed by AT&T with the number of cell sites deployed by Sprint and T-Mobile along a set of drive routes to test whether, as the KL Paper predicts, operators that rely more heavily on high-frequency spectrum in fact design their networks to include many more cell sites.

We examined the drive test data for the top 100 CMAs (which account for almost two-thirds of the U.S. population). The vast majority of the geographic areas within these CMAs are "suburban" areas under the definition used in the KL Paper (U.S. Census Tract population density greater than 100 people per square mile and less than 10,000 people per square mile). Based upon these data, it appears that AT&T has more cell sites than Sprint along the drive test routes in 89 of 100 CMAs, and the same number of cell sites in 1 CMA. In the 10 CMAs where Sprint has more cell sites, it has at most 1.28 times more cell sites. Likewise, these data show that AT&T has as many as or more base stations than T-Mobile in 46 out of the 100 CMAs. And in the locations where T-Mobile has more cell sites than AT&T, it never has more than about 1.62 times more (and typically much less). These data are wholly inconsistent with the KL Paper's estimates, which, for example, would predict that T-Mobile, with networks that currently consist entirely of high-frequency spectrum, would have nearly *four times* more cell sites than AT&T in suburban areas. The deployment costs for AT&T, Sprint, and T-Mobile would not be too different from the perspective of pure number of base stations.

These empirical data thus provide strong evidence that the KL Paper predictions are invalid.

Finally, we note that many of the flaws we have identified in the KL Paper also apply to the paper by CostQuest Associates ("CQA Paper") submitted by T-Mobile in this proceeding, which also purports to estimate differences in the cost of high- and low-frequency deployments in rural and suburban areas.[40] The CQA Paper purports to use "a set of defined 'real world'

---

[39] We used a 130 dB link budget (*i.e.*, path loss) for the 700 MHz calculations and 132 dB for the 1900 MHz calculations. While the link budget is largely independent of the carrier frequency, this 2 dB difference reflects better high-frequency antenna efficiency at the device. The mobile station height is 1.5 meters and the base station antenna height is 30 meters.

[40] *See* T-Mobile USF Mobility Model Report, CostQuest Associates (CQA) Economic Research & Analysis (October 1, 2012), attached to Letter from Trey Hanbury (T-Mobile Attorney) to Marlene H. Dortch (Secretary, FCC), WT Docket Nos 12-268 & 12-269 (Jan. 29, 2014). The CQA Paper explains that its modeling is based on areas not served by 4G technology (which it

engineering rules as the approach to modeling network design."[41] Because CQA has not disclosed the actual model it used, we are unable to examine its assumptions and inputs, but it is clear from the general descriptions of the model in the CQA Paper that it cannot be used to predict accurate cost differences in real-world high- and low-frequency deployments. Like the KL Paper, it ignores the many factors that can make high-frequency spectrum more cost-effective to deploy than low-frequency spectrum,[42] including, for example, that high-frequency deployments require smaller antenna elements that enable greater gain and more efficient use of advanced antenna technologies. The CQA Paper also erroneously compares the number of base stations for a pure 700 MHz network to a pure 1900 MHz network, thus ignoring that all or most operators use a mix of high- and low- frequency spectrum and deploy a sufficient number of base stations to enable the desired QoS levels using the highest frequency, thus largely negating theoretical propagation-related coverage benefits of lower-frequency spectrum.

The CQA Paper also understates the extent to which low-frequency deployments require more cell sites to meet capacity demands. According to the CQA Paper, its model allows cell splitting where there are a large number of businesses in an area.[43] However, cell splitting is required wherever demand exceeds the capacity of the cell site serving that area, and, the CQA Paper does not clearly indicate that its model reflects the need for cell-splitting in any situation unless the number of business locations in an area reaches some (unspecified) level. The existence of a large concentration of businesses is only one example where that situation is likely to occur. Cell splitting will also occur in densely populated suburban areas, commuting corridors, buildings with just one business that houses many employees, and other places where large numbers of people might gather during parts of the day. The CQA model also uses outdated 2011 data,[44] and the CQA Paper explains that the model is not even designed to measure "precise tower count[s] necessary for building and operating a 4G wireless network."[45] Since

---

appears to define as HSAP+, LTE and WiMAX) as of the end of 2011. Given that these technologies were deployed in many urban cores by the end of 2011, the analysis necessarily focuses on areas outside of these urban cores. *Id.* at 6-7.

[41] CQA Paper, at 9.

[42] We also discussed this issue at length in our prior paper responding to the Professor Peha's analysis, which makes many of the same errors as the CQA Paper. *See* Professor Reed and Dr. Tripathi, The Value of Spectrum, A Response To Professor Jon M. Peha's Paper (January 7, 2013), attached to Reply Comments of AT&T, Policies Regarding Mobile Spectrum Holdings, WT Docket No. 12-269 (January 7, 2013).

[43] CQA Paper at 11.

[44] The CQA paper was initially filed in another FCC proceeding on October 1, 2012, and is derived from industry "data on wireless network deployments as of the end of 2011." CQA Paper at 7.

[45] CQA Paper, at 7 n.3. Instead, CQA contends that its modeling is intended to be just a "first step," and a future "multi-effort process" will "involve accurately identifying" cell site numbers. In addition, the CQA model is focused on measuring "base station requirements for early stage

the CQA Paper attempts to determine the costs of deploying networks in non-4G areas based on 2011 data, the actual design area used by the CQA Paper would likely include largely rural and suburban environments. The propagation advantage of low-frequency spectrum in a theoretical green-field deployment would then lead to an inflated cost difference between a low-frequency network and a high-frequency network. The use of a realistic overlay scenario would have led to similar costs for the 700 MHz and 1900 MHz networks. In any case, the results of the CQA model are not credible: for example, it finds that 1900 MHz networks in Kentucky and Louisiana will be 22 and 19 times more costly to deploy than 700 MHz networks. We note, however, that even with these clearly inflated estimates, the CQA Paper still produces average cost differences that are well below those predicted in the KL Paper. The CQA model estimates that a 1900 MHz network would, on average, cost about 3.8 times more than a 700 MHz network, whereas the KL Paper predicts that a 700 MHz network will be 7 times more expensive in rural areas.

5. THE DELINIATION OF URBAN, RURAL, AND SUBURBAN AREAS

After computing a separate frequency-based weighting for urban, rural and suburban areas, the KL Paper acknowledges that there is no practical way to actually incorporate a separate urban/rural/suburban weighting scheme into the FCC's spectrum screen, because spectrum license areas are not neatly separated into urban, rural, and suburban areas.[46] Rather, demand for wireless capacity can vary greatly from one block to the next, and, more often than not, any given county or CMA will contain a range of neighborhoods of varying capacity needs.

The KL Paper attempts to address this issue by combining the separate weights it developed for urban, rural, and suburban areas into a single composite weight using an average weighting approach. But this raises the question as to what weights should be used to compute the composite weighted average. In this regard, it is important to remember that the individual "urban," "rural," and "suburban" weights derived in the KL Paper have very specific wireless engineering-based meanings. The terms "rural" and "suburban" refer to areas where, according to the KL Paper, the more favorable propagation characteristics of lower frequency spectrum permit network operators to build out coverage-only networks using fewer cell sites. The term "urban" refers to areas where, according to the KL paper, the number of cell sites is driven by capacity demand and building penetration exigencies, thus partially negating the propagation benefits of low frequency spectrum.

---

network planning" and not the actual number of base stations that will be deployed. CQA Paper, at 8. Ordinarily, the number of base stations can change significantly after tuning and procedures that occur in the more advance planning and deployment stages.

[46] KL Paper, at 17 ("it would be very time consuming and difficult to carry out a spectrum screen analysis such that each competitive market is broken down into urban, suburban, and rural areas").

A proper weighting mechanism would thus need to at least identify the portion of the U.S. that is covered by these specific types of "urban," "rural," and "suburban" areas. As the KL Paper recognizes, however, there is no source of data that separates the U.S. into these categories. Accordingly, the KL Paper uses census tract data to compute a proxy for the areas of the U.S. covered by urban, rural, and suburban areas. The problem with this approach is that the census tract data used in the KL Paper does not even remotely reflect real-world urban, rural, and suburban areas in the wireless engineering sense in which they are used in the KL Paper.

To see why this is so, consider first how the KL Paper derived its weights from the census tract data. The KL paper first defines "urban" areas to be census tracts with a population density of over 10,000 people per square mile, "rural" areas to be census tracts with a population density of below 100 people per square mile, and "suburban" areas to be census tracts with a population density of more than 100, but less than 10,000, people per square mile. Using these definitions, the KL Paper computes that 10.5% of the population is urban, 14% of the population is rural, and 75.5% – or more than three quarters – of the population is suburban (*i.e.*, in areas where network design is purely coverage driven).

But these percentages bear no relation to the engineering assumptions in the KL Paper. Indeed, the conclusion that cell sizes are driven by capacity demands in only about 10% of the country is facially inconsistent with the widespread acknowledgement that rapidly escalating demand for bandwidth intensive data services is creating enormous capacity challenges, both short-term and long-term, in large swaths of the country. One obvious flaw in the KL Paper is that the census tract data on which it relies reflects the areas in which people reside – *i.e.,* where we sleep at night. It thus does not account for the fact that people move around throughout the day causing a need for significant capacity in many areas where census tract-based population densities may be very low. For example, many census tracts in downtown areas in large cities are comprised mainly of office buildings. These areas can have very low census-based population densities, because very few people actually reside in these areas. However, during the work day, the population densities in these areas become enormous and, in these areas, cell sizes must be very small to meet the very high daytime demand for mobile broadband capacity. Thus, although these sorts of areas are clearly "urban" areas in the network engineering sense, they are mislabeled as "suburban" or even "rural" in the weighting scheme used in the KL Paper.

There are numerous specific examples of this phenomenon. Census tract number 109 in midtown New York City has a population density of only 2,697 according to the 2010 census, and thus would be defined as a "suburban" area under the weighting scheme used in the KL Paper. But this is where Penn Station and Madison Square Garden are located. Obviously, the cells in these areas must be small to serve the high capacity demands in this area, particularly during rush hour and during events held at the Madison Square Garden. Similarly, census tract 107, which covers about half of downtown Washington, D.C., has a population density of only 5,339 people per square mile according to the 2010 census, notwithstanding that the population in that area swells during each business day, requiring network operators to build smaller cells to meet that capacity. Likewise, census tract 9802, which covers Newark International Airport – one of the busiest airports in the country – has a population density of

only 186.5 people per square mile. There are myriad other examples, including, but not limited to busy commuting corridors, which are typically along highways or railroad tracks where very few people reside (and thus have low census tract population densities), but where many people travel at the same time during the day, thus requiring relatively small cell sizes to serve the high capacity demands during those peak periods.

By using population densities to determine the individual urban, rural and suburban weights, the composite weights greatly overstate the portion of the U.S. that is suburban and rural, as opposed to urban. The result is a composite average that is problematic on its face. As shown in the table below, according to the KL Paper, the maximum urban-specific weight for Lower 700 MHz spectrum should be about 2.5 times higher than the urban-specific weight for BRS (2.5 GHz) spectrum. But the "composite weight" for Lower 700 MHz spectrum, which would be used in all areas, would give Lower 700 MHz spectrum a weight that is *6.4 times* higher than for BRS spectrum. Thus, in areas of very high demand, the weighting scheme developed by the KL Paper produces results that implicitly assume that a network operator using BRS spectrum to serve downtown New York City would deploy more than six times as many cell sites as a network operator using Lower 700 MHz spectrum. That is not realistic by any legitimate measure.

IMPACT OF COMPOSITE WEIGHTING		
Band	**Urban Weight Based On Propagation & Building Penetration Loss**	**Composite Urban Weight**
BRS	0.44	0.20
Lower 700 MHz	1.12	1.28
Difference	**155% (2.5 times higher)**	**540% (about 6.4 times higher)**

Source: KL Paper, at 15, 20.

There are additional problems with the weighting scheme used in the KL Paper. Most notably, the KL Paper, without explanation, defines "urban" areas to be census tracts with a population density greater than 10,000 people per square mile. That delimiter, however, is more than *ten times* greater than the one used by the Census Bureau to identify urban areas. The Census Bureau uses 1,000 people per square mile as the delimiter for urban areas, and the Census Bureau recognizes that contiguous tracts that do not meet the 1,000 threshold should often still be classified as "urban," and that census tract population density is merely the starting point for making such determinations.[47]

6. CONSISTENCY IN A WEIGHTING SCHEME

Under the FCC's current rules, spectrum is to be included in the FCC's spectrum screen calculations if it is suitable and available for mobile broadband use. Under this standard, additional spectrum should be added to the screen. Specifically, we agree with Sprint that the FCC should promptly add the AWS-4 band. The rest of Sprint's BRS spectrum (2602-2614 MHz)

[47] *See* Urban Area Criteria for the 2010 Census, 76 Fed. Reg. 53029, 54040 (Aug. 24, 2011).

should also be added to the spectrum screen,[48] because this spectrum is currently being used to provide mobile broadband services. In addition, we agree with Sprint that the FCC should also add the H-Block, AWS-3, and 600 MHz spectrum bands once the appropriate service rules are finalized and the auctions have been conducted.[49]

However, for reasons given below, we disagree with Sprint's positions that (i) the FCC should continue to exclude Sprint's 120 MHz of EBS spectrum in its entirety,[50] (ii) if this 120 MHz spectrum is included, apply discounts (*e.g.*, a 5 percent discount for use by educational licensees, another 16 percent discount for gaps in coverage (*i.e.*, white spaces)), and (iii) any portion of that spectrum that cannot be combined into 20 MHz contiguous blocks should be excluded altogether.[51]

EBS spectrum is clearly suitable and available for mobile broadband services. In fact, Sprint is now actually using this spectrum for the mobile broadband service it calls "Sprint Spark." Nor is it appropriate to discount the weight of EBS spectrum (or include only a portion of it in the screen). It does not appear that the factors Sprint has identified are significant, or that they are more significant than similar impairments affecting other bands. For example, Sprint has not demonstrated that the utility of EBS spectrum it leases for mobile broadband services is materially affected by the FCC rule requiring the EBS licensee to reserve 5 percent of the capacity for educational use. We understand that when Sprint deploys EBS spectrum leased from an educational institution, it deploys the full amount of leased spectrum, including the portion "reserved" for educational use. Moreover, networks are engineered to serve peak demand, and we have seen no evidence that any reservation of EBS capacity overlaps with the areas and times where Sprint's network experiences peak demand. And, in any case, evidence submitted in the FCC proceeding reviewing the Softbank/Sprint/Clearwire transaction indicates that EBS licensees may typically use only a small fraction of the five percent of capacity they are entitled to use.[52] As to the argument that there are gaps in national coverage for EBS spectrum, we note that other spectrum bands, notably Cellular spectrum, are also site-based and thus subject to white space gaps,[53] but the FCC has included the entirety of that spectrum

---

[48] Sprint Cover Letter, at 27.

[49] *Id.* at 26-27.

[50] *Id.* at 28-30.

[51] *Id.* at 31-36.

[52] *See, e.g.,* Petition to Deny of The Consortium for Public Education And The Roman Catholic Diocese of Erie, Pennsylvania, *Applications of Sprint Nextel Corporation, Transferor SoftBank Corp., and Starburst II, Inc., Transferees; Joint Applications for Consent to Transfer of Control of Licenses, Leases, and Authorizations; and Petition for Declaratory Ruling under Section 310(b)(4) of the Communications Act of 1934, as amended*, IB Docket No. 12-343, at 6-7 (January 28, 2013) (explaining that for 96 of 127 licenses "there is no educational usage").

[53] FCC, *FCC Encyclopedia: Cellular Service* (Feb. 13, 2012), http://www.fcc.gov/encyclopedia/cellular-service.

in the screen without discount. Likewise, Lower 700 MHz A block is subject to exclusion zones with respect to Channel 51, but the FCC has included the entirety of that spectrum in the screen as well. And not all spectrum is available in 20 MHz contiguous blocks. For example, the H Block spectrum that the FCC recently auctioned is available only as a 10 MHz block, and Sprint admits that this spectrum should be included in the screen (another example is the Lower 700 MHz D/E blocks, which total only 12 MHz). If the FCC begins recognizing factors such as these as grounds for a discount, consistency and fairness would require the FCC to re-examine every band and impose similar discounts for all suitable and available spectrum.

Finally, if the FCC does employ a weighted spectrum screen that is premised on relative numbers of cell sites required to deploy spectrum in a typical commercial network, it should not weight the Lower 700 MHz D and E blocks as "low-frequency" that requires fewer cell sites. As we explained above, the unpaired Lower 700 MHz D and E block spectrum is suitable only for supplemental downlink capacity bonded with high-frequency spectrum such as 2.1 GHz AWS spectrum for FDD-based networks. For this reason, Sprint's weighting theory that weights should reflect relative cell sizes, lower 700 MHz D and E block spectrum should have a maximum weight that is no higher than that given to the high frequency spectrum with which it is bonded. Further, to the extent the FCC employs any spectrum screen that includes band-specific "discounts", the Lower 700 MHz D and E block spectrum should be accorded a significant discount to reflect that it cannot be used for two-way communications, and that deploying the 700 MHz D and E block spectrum is far more complex and more expensive than deploying traditional paired spectrum, because it requires the use of new carrier aggregation technologies that have only be recently developed.

7. CONCLUSION

In this paper we have demonstrated that the KL Paper's proposed weighting scheme is fundamentally flawed in multiple respects. *First,* the KL Paper's relative weighting scheme is based on the erroneous assumption that the only spectrum characteristic that determines value is its relative propagation characteristics when, in fact, propagation is just one of many factors that determine the value of spectrum, and propagation will often be a relatively insignificant factor in determining spectrum value. *Second,* even if the value of spectrum were determined solely by propagation and hence the number of cell sites, the KL Paper's simplistic formulas for estimating the relative number of cell sites for high- and low-frequency deployments significantly overstate the differences by ignoring key frequency-dependent factors that, in real world deployments, substantially reduce differences in cell size. *Third,* the KL Paper's analysis fails to account for the fact that modern deployments are capacity-based in a large majority of cases and hence require small cells that negate any propagation benefits of low-frequency spectrum on which the KL Paper's conclusions are based. *Fourth,* the KL Paper's analysis fails to account for the fact that network operators typically have a mix of high- and low-frequency spectrum and that network operators generally build enough cell sites to support their highest frequency spectrum, so that no operator is actually building the type of low-frequency only coverage network on which the KL Paper's conclusions are based. *Fifth,* empirical data confirms our conclusions that the KL Paper greatly overstates the frequency-dependent cost differences in deploying spectrum. *Sixth,* the KL Paper's composite weighting

scheme inflates the relative weights for urban areas far beyond those that even the KL Paper's flawed analysis could support. For all of these reasons, we conclude that the analysis in the KL Paper does not establish a legitimate basis for weighting high-frequency spectrum more than low-frequency spectrum in the FCC's screen.

ATTACHMENT

(Sample Antenna Specifications Confirming Higher Gain For Higher Frequencies)

Product Specifications

COMMSCOPE®

on the go

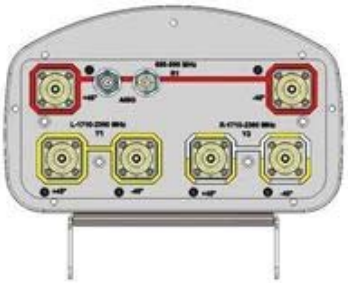

Andrew Solutions

SBNHH-1D65B

Andrew® DualPol® Tri-band Teletilt® SmartBeam® Antenna, 1 x 698–896 MHz and 2 x 1710–2360 MHz, 65° horizontal beamwidth, RET compatible

- Three DualPol® antennas under one radome
- Interleaved dipole technology providing for attractive, low wind load mechanical package

Electrical Specifications

Frequency Band, MHz	698–806	806–896	1710–1880	1850–1990	1920–2180	2300–2360
Gain, dBi	14.3	14.6	17.3	17.2	17.3	17.3
Beamwidth, Horizontal, degrees	68	64	70	67	66	60
Beamwidth, Vertical, degrees	12.0	10.7	5.7	5.4	4.8	4.5
Beam Tilt, degrees	0–14	0–14	0–7	0–7	0–7	0–7
USLS, typical, dB	15	15	14	14	14	14
Front-to-Back Ratio, Copolarization 180° ± 20°, dB	24	27	26	25	25	20
CPR at Boresight, dB	20	20	20	20	18	18
CPR at Sector, dB	10	10	10	8	10	6
Isolation, dB	28	28	29	29	29	29
Isolation, Intersystem, dB	30	30	30	30	30	30
VSWR | Return Loss, dB	1.5:1 | 14.0	1.5:1 | 14.0	1.5:1 | 14.0	1.5:1 | 14.0	1.5:1 | 14.0	1.5:1 | 14.0
PIM, 3rd Order, 2 x 20 W, dBc	-150	-150	-150	-150	-150	-150
Input Power per Port, maximum, watts	400	400	350	350	350	350
Polarization	±45°	±45°	±45°	±45°	±45°	±45°
Impedance	50 ohm	50 ohm	50 ohm	50 ohm	50 ohm	50 ohm
Lightning Protection	dc Ground	dc Ground	dc Ground	dc Ground	dc Ground	dc Ground

Mechanical Specifications

Color | Radome Material	Light gray | Fiberglass, UV resistant
Connector Interface | Location | Quantity	7-16 DIN Female | Bottom | 6
Wind Loading, maximum	617.7 N @ 150 km/h 138.9 lbf @ 150 km/h
Wind Speed, maximum	241.4 km/h | 150.0 mph

Dimensions

Depth	181.0 mm | 7.1 in
Length	1828.80 mm | 72.00 in
Width	301.00 mm | 11.85 in
Net Weight	23.00 kg | 50.71 lb

Remote Electrical Tilt (RET) Information

Annual Failure Rate, maximum	0.01%
Power Consumption, during motor movements, maximum	11.0 W
Power Consumption, idle state, maximum	2.0 W
Power Input	10–30 V
Protocol	3GPP/AISG 2.0 Multi-RET

©2013 CommScope, Inc. All rights reserved. All trademarks identified by ® or ™ are registered trademarks, respectively, of CommScope.
All specifications are subject to change without notice. See www.commscope.com for the most current information. Revised: April 9, 2013

SBNHH-1D65B

RET Interface	RS-485 Female (daisy chain port ,1) | RS-485 Male (input port, 1)

Regulatory Compliance/Certifications

Agency	Classification
RoHS 2011/65/EU	Compliant by Exemption
China RoHS SJ/T 11364-2006	Above Maximum Concentration Value (MCV)
ISO 9001:2008	Designed, manufactured and/or distributed under this quality management system

Included Products

DB380-5083 — Standard two point mounting system to secure BSA panels to pipes with an OD measuring 2.4-4.5" (60-115mm). Includes locking downtilt brackets and heavy guage pipe brackets to provide superior windload performance.

©2013 CommScope, Inc. All rights reserved. All trademarks identified by ® or ™ are registered trademarks, respectively, of CommScope.
All specifications are subject to change without notice. See www.commscope.com for the most current information. Revised: April 9, 2013

KATHREIN SCALA DIVISION

800 10765V01
Dual Band Broadband 6', 65 Degree Antenna RET

- X-polarized (+45° and -45°).
- UV resistant fiberglass radomes.
- Wideband vector dipole technology.
- DC Grounded metallic parts for impulse suppression.
- RET motor housed inside the radome and field replaceable.

698–894 MHz

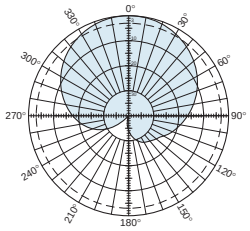

Horizontal pattern
±45°- polarization

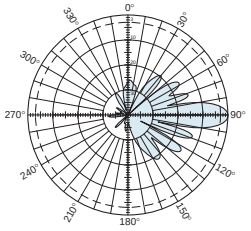

Vertical pattern
±45°- polarization
0°–10° electrical downtilt

1710–2170 MHz

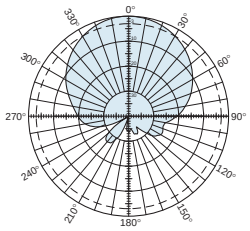

Horizontal pattern
±45°- polarization

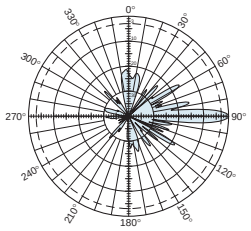

Vertical pattern
±45°- polarization
0°–10° electrical downtilt

General specifications:

Frequency range	698–894 MHz // 1710–2170 MHz
Impedance	50 ohms
VSWR	<1.5:1
Intermodulation (2x20w)	IM3:< -150 dBc
Polarization	+45° and -45°
Connector	4 x 7-16 DIN female (long neck)
Isolation	intrasystem >30 dB // intersystem >35 dB
See reverse for order information.	

IRT specifications:

Logical interface ex factory[1)]	3GPP/AISG 2.0
Protocols	AISG 1.1 and 3GPP/AISG 2.0 compliant
Hardware interface[2)]	2 x 8pin connector acc. IEC 60130-9; according to AISG: – RCUin (male): Control / Daisy chain in – RCUout (female): Daisy chain out
Power supply	10–30 V
Power Consumption	<1 W (standby); <8.5 W (motor activated)
Adjustment time (full range)	40 seconds
Adjustment cycles	>50,000
Certification	FCC 15.107 Class B Computing Devices

1) The protocol of the logical interface can be switched from 3GPP/AISG 2.0 to AISG 1.1 and vice versa with a vendor specific command. Start-up operation of the RCU 86010149 is possible in an RET system supporting AISG 1.1 or supporting 3GPP/AISG 2.0 after performing a layer 2 reset before address assignment. The protocol can also be changed as follows: AISG 1.1 to 3GPP: Enter "3GPP" into the additional data filed "Installer's ID" and perform a layer 7 reset or a power reset. 3GPP to AISG 1.1: Enter "AISG 1" into the additional datafield "Installer's ID" and perform a layer 2 reset or a power reset. After switching the protocol any other information can be entered into the "Installer's ID" field.

2) The tightning torque for fixing the connector must be 0.5 – 1.0 Nm ('hand-tightened'). The connector should be tightened by hand only!

Specifications:

	698–806 MHz	824–894 MHz	1710–1755 MHz	1850–1990 MHz	2110–2170 MHz
Gain	15.3 dBi	15.8 dBi	18 dBi	18.5 dBi	18 dBi
Front-to-back ratio	>30 dB (co-polar) 34 dB (average)	>30 dB (co-polar) 34 dB (average)	>27 dB (co-polar) 34 dB (average)	>27 dB (co-polar) 34 dB (average)	>27 dB (co-polar) 34 dB (average)
Maximum input power per input	500 watts (at 50°C)	500 watts (at 50°C)	300 watts (at 50°C)	300 watts (at 50°C)	300 watts (at 50°C)
+45° and -45° polarization horizontal beamwidth	68° (half-power)	65° (half-power)	63° (half-power)	62° (half-power)	63° (half-power)
+45° and -45° polarization vertical beamwidth	11.8° (half-power)	10.8° (half-power)	5.8° (half-power)	5.8° (half-power)	5.8° (half-power)
Electrical downtilt continuously adjustable	0°–10°	0°–10°	0°–10°	0°–10°	0°–10°
Min sidelobe suppression for first sidelobe above main beam	0° 5° 10° T 16 16 18 dB 18 20 20 dB	0° 5° 10° T 18 18 16 dB 20 22 20 dB	0° 5° 10° T 18 18 18 dB 20 22 20 dB	0° 5° 10° T 18 18 18 dB 20 22 20 dB	0° 5° 10° T 18 18 18 dB 20 22 20 dB
Cross polar ratio Main direction 0° Sector ±60°	25 dB (typical) >10 dB, 16 dB (avg)	20 dB (typical) >10 dB, 14 dB (avg)	25 dB (typical) >8 dB, 15 dB (avg)	30 dB (typical) >10 dB, 15 dB (avg)	25 dB (typical) >8 dB, 15 dB (avg)
Tracking	1.0 db	1.5 db	1.5 db	1.0 db	1.5 db
Squint	±2.5°	±3°	±3°	±2.5°	±3°

TÜV 11400-C
936.4267

RoHS Lead-Free
Sep 1, 2012

AISG Antenna Interface Standards Group

Kathrein Inc., Scala Division Post Office Box 4580 Medford, OR 97501 (USA) Phone: (541) 779-6500 Fax: (541) 779-3991
Email: communications@kathrein.com Internet: www.kathrein-scala.com

KATHREIN
SCALA DIVISION

800 10765V01

Dual Band Broadband 6', 65 Degree Antenna RET

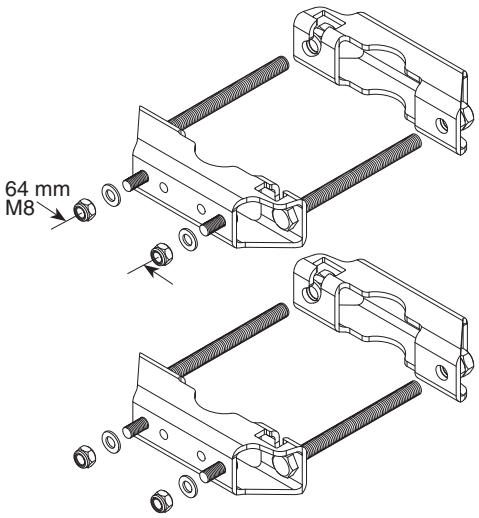

Mounting Brackets
for use with 2-point mount antennas
Mast dia. 2–4.5 inches (50–115 mm)
Weight: 4.4 lb (2 kg)

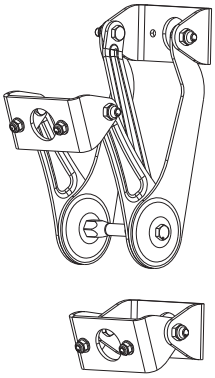

Mechanical Tilt Brackets
for use with 2-point mount antennas
Weight: 9.5 lb (4.3 kg)
(Model 850 10008)

Mechanical specifications:

Weight	51.8 lb (23.5 kg) 56.2 lb (25.5 kg) clamps included
Dimensions	75.5 x 11.8 x 6 inches (1918 x 300 x 152 mm)
Wind load Front/Side/Rear Mounting category	at 93 mph (150kph) 214 lbf / 81 lbf / 221 lbf (950 N) / (360 N) / (980 N) H (Heavy)
Wind survival rating	150 mph (240 kph)
Shipping dimensions	85.3 x 12.7 x 7.5 inches (2166 x 322 x 190 mm)
Shipping weight	62 lb (28.1 kg)
Mounting	Mounting hardware included for 2 to 4.6 inch (50 to 115 mm) OD masts.

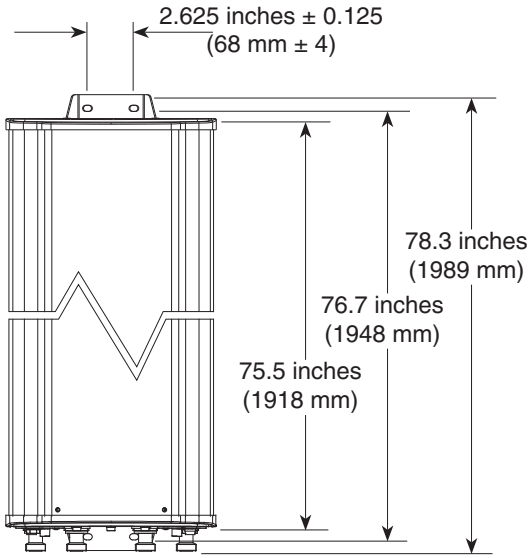

KATHREIN 860 10149

Tested To Comply With FCC Standards

This device complies with part 15 of the FCC Rules. Operation is subject to the following two conditions: (1) This device may not cause harmful interference, and (2) this device must accept any interference received, including interference that may cause undesired operation.

Note: Refer to part number 860 10149 for the specifications of the remote control actuator.

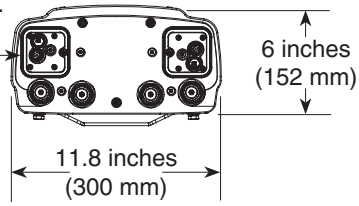

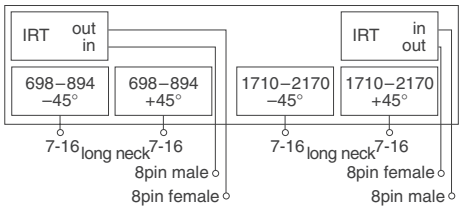

Order Information:

Model	Description
800 10765V01	Dualband antenna with mounting bracket 0°–10° // 0°–10° electrical downtilt
800 10765V01 K	Dualband antenna with mounting bracket and mechanical tilt bracket 0°–10° // 0°–10° electrical downtilt

*Mechanical design is based on environmental conditions as stipulated in TIA-222-G-2 (December 2009) and/or ETS 300 019-1-4 which include the static mechanical load imposed on an antenna by wind at maximum velocity. See the Engineering Section of the catalog for further details.

All specifications are subject to change without notice. The latest specifications are available at www.kathrein-scala.com.

Kathrein Inc., Scala Division Post Office Box 4580 Medford, OR 97501 (USA) Phone: (541) 779-6500 Fax: (541) 779-3991
Email: communications@kathrein.com Internet: www.kathrein-scala.com