Before the
FEDERAL COMMUNICATIONS COMMISSION
Washington, D.C. 20554

In the Matter of	)	
	)	
AT&T Petition for Rulemaking Regarding Revision of WCS Rules	)	RM-11731
	)	

To: The Commission

COMMENTS OF GARMIN INTERNATIONAL, INC.

Garmin International, Inc. ("Garmin") hereby submits its comments in response to the Public Notice, "Wireless Telecommunications Bureau Seeks Comment on AT&T Petition for Rulemaking Regarding Revision of WCS Rules," DA 14-1210, RM-11731, released by the Commission's Wireless Telecommunications Bureau ("Bureau") on August 21, 2014 ("Public Notice").

The Public Notice seeks comment on a request by AT&T Mobility Spectrum LLC; BellSouth Mobile Data, Inc.; New Cingular Wireless PCS, LLC; and SBC Telecom Inc. (collectively, "AT&T") to begin a rulemaking to amend the rules for the C and D Blocks of the Wireless Communications Services ("WCS") to permit the use of those blocks for in-flight connectivity service.[1] Garmin agrees that this proposal holds the potential to provide new and useful services for consumers aboard commercial aircraft; however, it also is important to ensure

[1] *See* AT&T Mobility Spectrum LLC; BellSouth Mobile Data, Inc.; New Cingular Wireless PCS, LLC; and SBC Telecom Inc. Petition for Rulemaking Amending WCS Technical Standards Rules, filed Aug. 8, 2014 (the "Petition"). AT&T also has filed a petition for waiver of the WCS rules to permit it to offer the proposed service. AT&T Mobility Spectrum LLC; BellSouth Mobile Data, Inc.; New Cingular Wireless PCS, LLC; and SBC Telecom Inc. Petition for Limited Waiver of WCS Technical Standards and Services Rules (Call Sign WQND999, File No. 0006417028), filed Aug. 8, 2014 (the "Waiver Request").

that changes to the WCS rules do not cause an adverse effect on users of other bands. As described below, Garmin evaluated the possibility that facilities operating with AT&T's proposed technical specifications would cause interference to existing aviation users of Satellite Digital Audio Radio Service ("SDARS") spectrum adjacent to the WCS C and D Blocks. That testing demonstrated that there is a sufficiently significant risk of such interference that the Commission needs to take the issue into account in evaluating the Petition.[2]

I. There Is a Significant Installed Base of Customers Who Use SDARS Services for General Aviation Purposes

In the United States, Garmin is the leading manufacturer of global positioning system ("GPS") products for the General Aviation industry. It is also a leading supplier of GPS-enabled products for the maritime market and for general consumer use. Garmin has been manufacturing GPS-enabled navigation devices since 1991. The company also produces other products for the General Aviation industry and maritime market, and many of these products integrate with Garmin's GPS-enabled navigation devices for use in airplane cockpits and on boats.

Garmin's products include SDARS receivers that allow customers to receive service from Sirius XM, including valuable weather data.[3] Garmin's receivers often are integrated into a broader flight information platform that gives pilots access to consolidated weather information, GPS data, and other information in flight. Since Garmin first began offering these products, it has sold more than a quarter million SDARS receivers to U.S. customers in the North American market, about half of which have been sold for use in General Aviation.[4] Moreover, Garmin is

[2] The Waiver Request asks the Commission to permit AT&T to operate in the WCS C and D Blocks under the same rules proposed in the Petition. The Commission has not yet sought comments on the Waiver Request.

[3] Some customers also purchase Sirius XM audio products.

[4] Exhibit 1 at 1.

not the only vendor, as the Sirius XM website lists more than 20 companies that make receivers for its weather data.[5]

II. Analysis of the AT&T Proposal Shows That It Will Cause Interference to In-Air Users of Sirius XM Service.

Garmin has concerns that AT&T may not have taken into account the potential impact of its proposal on aviation users of Sirius XM service, based particularly on the fact that its base stations will be pointed towards the sky. In its most recent modification to the WCS rules, the FCC added provision regarding WCS-SDARS interference, but it addresses interference only at the ground level;[6] the Petition does not propose any amendment to that provision. In addition, the Petition does not propose any specific protection for in-air users of Sirius XM services. In this context, and given the extensive use of Sirius XM weather data and audio services, Garmin analyzed the potential for interference from AT&T's proposed service. This analysis conclusively demonstrates that interference is very likely to occur.

The testing evaluated the impact of a 2-kilowatt ground-based transmitter operating in the WCS D Block on airborne receivers, based on a typical installation with the receive antenna on top of an aircraft and a ground plane, as recommended by Garmin.[7] The testing evaluated the impact on a range of receivers, including Garmin's most recent product, one that incorporates the newest Sirius XM receiver technology.[8]

---

[5] *See* Sirius XM Satellite Radio, Hardware Solutions|Aviation, http://www.xmwxweather.com/aviation/hardware-solutions.php (last visited September 22, 2014).

[6] *See* 47 C.F.R. § 27.64(d).

[7] *See* Exhibit 1.

[8] Exhibit 1 at 1.

For the purpose of the analysis, harmful interference was defined as interference that degraded the Sirius XM signal sufficiently to result in a three-percent bit error rate.[9] Using that standard, Garmin's testing showed signal degradation can occur when an aircraft in level flight is within a radius of 23.4 miles of a ground-based transmitter.[10] In certain circumstances when the airplane and ground plane are not in a position to attenuate the signal from the base station, interference could occur at distances up to 46 miles.[11]

Given these findings, the likelihood of interference to aviation users of Sirius XM services is high. General Aviation pilots typically operate at lower altitudes than commercial pilots, clearly within the range of potential interference shown by Garmin's testing. The potential for such interference is magnified because AT&T's proposal would require "robust, uninterrupted service to all routes within the United States among 50 or more airports classified as large or medium hubs . . . by March 13, 2017."[12] These routes are the most heavily trafficked parts of American airspace, for both commercial and General Aviation flights. Moreover, the potential for interference will increase over time as the proposed AT&T service is more widely deployed and more base stations are installed.

III. The Interference Issues Should Be Addressed Before the Commission Moves Forward with a Rulemaking

The Commission has recognized in many contexts, including when it developed the current WCS rules, that it is important to address and resolve interference issues before it

[9] *Id.* at 3.

[10] *Id.* at 1, 5.

[11] *Id.* at 6.

[12] Petition at 5 (proposed Section 27.14(p)(3) of the Rules).

modifies rules concerning use of spectrum.[13] The public interest requires that it follow the same approach here.

As described in Exhibit 1, more than a quarter million Garmin SDARS receivers have been shipped into the North American market, half of which are utilized in General Aviation. The weather information Sirius XM provides over those devices is extremely valuable to pilots and helps them make informed, safe decisions. Based on the data in Exhibit 1, however, it appears probable that the in-flight connectivity service, under the parameters proposed by AT&T, will cause significant interference with Sirius XM signals in areas where General Aviation pilots operate.

Consistent with the Commission's prior approach, its regulations, and its obligations under the Communications Act, the agency must consider this potential interference before changing the WCS rules, including as proposed in the Petition. Garmin is hopeful that a solution may be possible as AT&T refines its proposed in-flight connectivity service and its suggested technical parameters for that service.

IV. Conclusion

The Petition proposes a potentially valuable new use for WCS spectrum. It also raises significant questions, however, about potential interference by AT&T's proposed WCS operations to reception of Sirius XM services. The Commission should resolve those issues before issuing a notice of proposed rulemaking and allowing the proposed service to proceed.

---

[13] *See, e.g.,* Amendment of Part 27 of the Commission's Rules to Govern the Operation of Wireless Communications Services in the 2.3 GHz Band, *Order on Reconsideration,* 27 FCC Rcd 13651, 13662-8 (2012) (revising rules to reduce potential for interference between WCS and SDARS). *See also* 47 C.F.R. § 27.64.

For the foregoing reasons, Garmin requests that the Commission act in accordance with these comments.

Respectfully submitted,

GARMIN INTERNATIONAL, INC.

By /s/
Joshua H. Maxfield
Assistant General Counsel

Garmin International, Inc.
1200 East 151st Street
Olathe, KS 66062
(913) 440-2318

September 22, 2014

Exhibit 1

SDARS Interference from WCS

SDARS Interference from WCS

Experimental Evidence of SDARS Jamming That Will Result from AT&T's
Proposed In-Flight Communication Services Using WCS Spectrum

The Garmin family of consumer electronics companies manufactures SDARS (SiriusXM) receivers for terrestrial, marine and aviation with over a quarter million SDARS receivers shipped into the North American market, of which half have been for use in general aviation.

Executive Summary:

On August 8, 2014 AT&T Mobility Spectrum LLC and partners (hereafter AT&T) sought a change in the FCC's WCS technical standards and service rules with the FCC to accommodate a new in-flight, LTE based connectivity service for airlines and passengers. This application proposes terrestrial ground-to-air uplink transmitters in the WCS D block, as well as air to ground transmitters in the WCS C Block. Both are directly adjacent to SDARS spectrum.

If this modification is approved, Garmin believes, based on its testing to date, that the proposed WCS plan to occupy the Block D spectrum (2345-2350 MHz) will result in jamming of airborne SiriusXM receivers across the United States.

In careful experimental testing, Garmin has observed degraded SiriusXM data reception as a result of WCS D Block ground-to-air uplink transmissions. This degradation can occur, in the worst case, when an aircraft in level flight is within a radius of 23.4 miles of a ground-based transmitter, a concern that is only exacerbated when the aircraft banks. Testing was performed on multiple products integrating different SiriusXM receivers, including a new Garmin product that integrates the latest generation of SiriusXM receiver technology.

Introduction & Background

As shown in Figure 1, the SDARS and WCS services occupy 55 MHz of spectrum from 2305-2360 MHz, in a portion of the radio frequency ("RF") spectrum commonly referred to as the "S-band." SDARS occupies the center portion of this band, 2320-2345 MHz, and this spectrum is divided evenly between two separate, but co-owned, SDARS networks, Sirius and XM. The WCS service occupies frequencies on either side of the SDARS allocation and consists of six blocks of 5 MHz each in the 2305-2320 and 2345-2360 MHz bands.

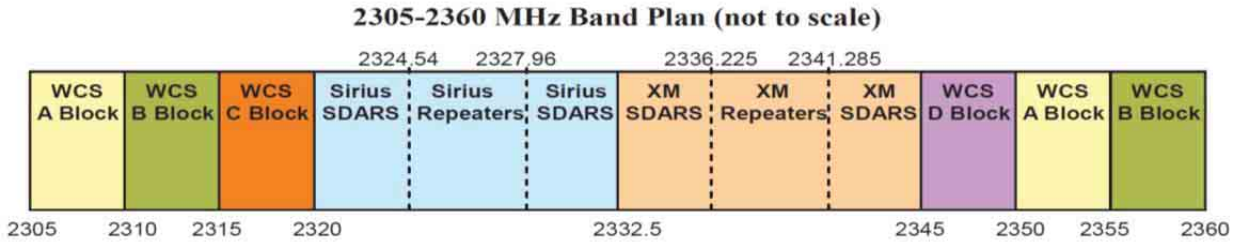

Figure 1: SDARs/WCS spectrum usage

AT&T is proposing to repurpose unpaired WCS C and D blocks into an LTE in-flight connectivity service. The WCS C block would be used for air-to-ground transmissions with average EIRP between 0.25 watts and 16 watts depending on altitude. The WCS D Block would be used for ground-to-air transmissions with a 2000 watt average EIRP and an allowed 13 dB peak to average power ratio ("PAPR"). (See Figure 2.) The D Block is directly adjacent to the XM band, which carries aviation weather and audio data. Though the AT&T petition envisions mitigation measures for ground based SiriusXM receivers based on antenna placement and orientation, Aviation SDARS receivers will not benefit from these measures; instead, aircraft will operate directly in the intended transmission path for the D Block ground-to-air uplinks.

Spectrum Usage

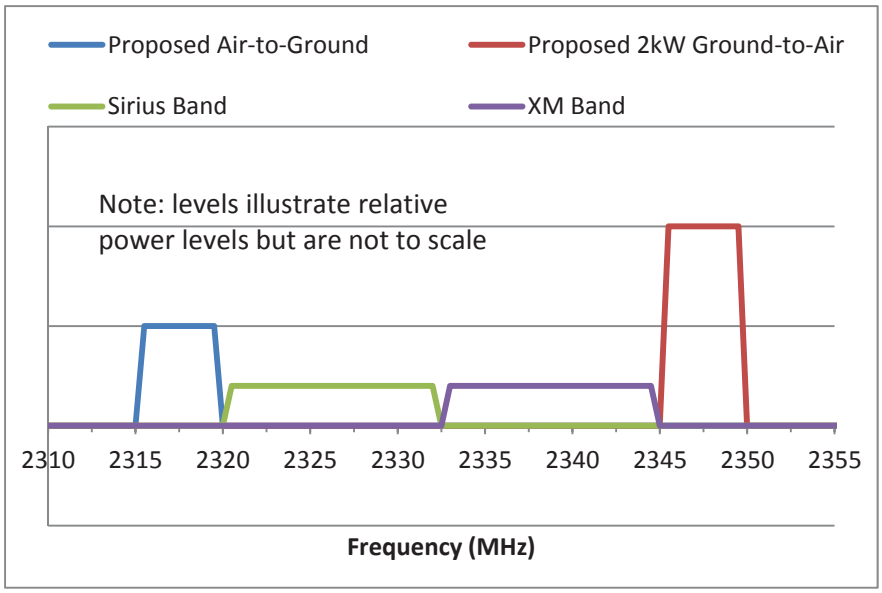

Figure 2: Proposed transmission scheme

This analysis focuses on interference to airborne XM-band SDARS receivers from the proposed ground-to-air transmitter. Figure 3 provides a detailed breakdown of the XM band spectrum usage and demonstrates the relative position of each sub-carrier with respect to the WCS D block (2345-2350 MHz). Note that there are two satellites, satellite 1 and satellite 2. Satellite 1 transmits a sub-carrier centered at 2344.05 MHz, which is directly adjacent to WCS D Block.

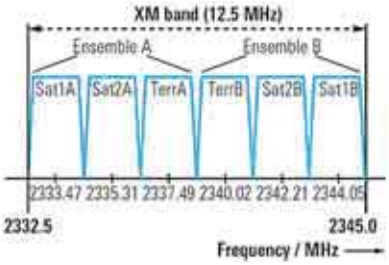

Figure 3: XM band satellite locations[1]

Interference Levels on Airborne SXM receivers

Harmful interference levels were determined by injecting an interfering signal into a conducted SiriusXM test set up until the SiriusXM satellite signals degraded to the point of exceeding a 3% Bit Error Rate ("BER"). The test configuration used to measure these levels is shown in Figure 4.

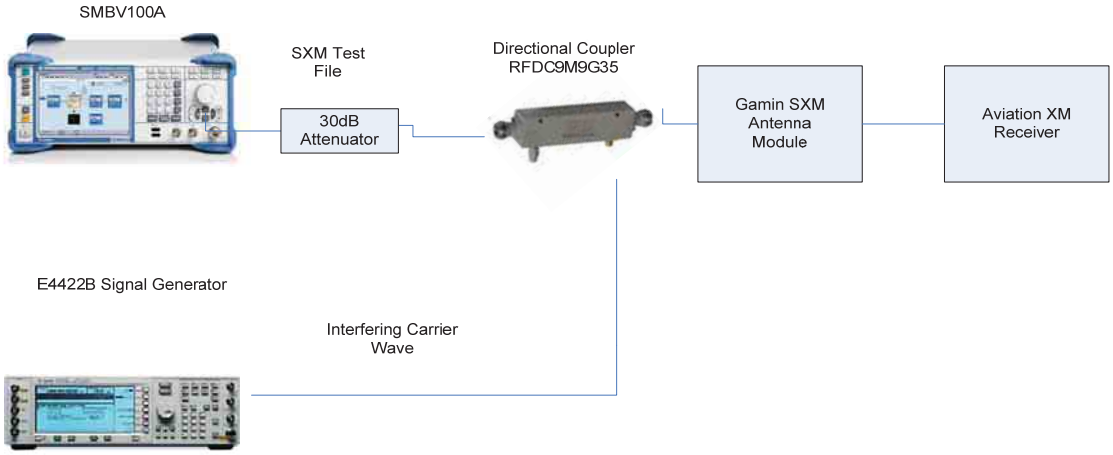

Figure 4: Test set up for determining interference

Careful test calibration ensured that the losses were accounted for. The insertion loss between the SMBV100A and the antenna module was measured using a network analyzer and the SMBV100A signal was increased to compensate for the extra losses; these losses included a 30 dB attenuator which is included to reduce the effects of SMBV100A generator noise. To check the accuracy of signal

[1] Figure obtained from Rhode & Schwarz website, http://www.rohde-schwarz.com/en/technologies/satellite-broadcast/xm-satellite/xm-satellite-technology/xm-satellite-technology_55613.html (accessed 9/18/2014).

adjustments, a bit error rate test, detailed in Table 1, was performed to ensure modifications did not increase the baseline bit error rate.

Test station Bit Error Rate (BER) comparison between the standard Garmin test set up and a station modified for interference testing.			
	Garmin XM test station	Compensated Interference test set up	u/m
Satellite 1 BER	1.4	1.0	%
Satellite 2 BER	1.1	0.7	%

Table 1: BER comparison Test

Once the test setup was calibrated, a carrier was injected into the set up using an Agilent 4422B RF generator with a measured single side band phase noise of -110 dBc/Hz. Three frequencies that coincide with the bottom, middle, and top of the WCS D block were tested in succession. The amplitude of the carrier wave was increased until satellite bit error rates reached 3%. The loss introduced to the interfering carrier wave by the directional coupler and cables was measured by a spectrum analyzer to be 37.3 dB which was removed from all measurements. (For example if the E4422B signal generator's amplitude is set to -11.5 dBm, the actual level into the antenna module is 37.3 dB lower, or -48.8 dBm.)

It should be noted that many of these levels are above (more conservative than) SiriusXM's stated -55 dBm conducted interference level.[2] The power levels that will cause interference are shown in Table 2. Because Satellite 1 (2344.05 MHz center, 1.64 MHz span) is located closer to the WCS D block, it is affected at lower power levels than Satellite 2 (2342.2 MHz, 1.64 MHz span).

Received power to cause interference at frequencies within the WCS D block			
Frequency	3% BER for Satellite 1	3% BER for Satellite 2	u/m
2.345GHz	-73.86	-59.80	dBm
2.3475GHz	-48.80	-46.74	dBm
2.35GHz	-44.08	-42.76	dBm
SiriusXM spec	-55	-55	dBm

Table 2: Received power which causes interference

[2] See April 17, 2012 letter from SiriusXM to FCC *"Written Ex Parte Presentation"* in WT Docket No. 07-293 and IB Docket No. 95-91.

Antenna Orientation

The orientation of the SiriusXM airborne antenna affects the amount of interference received. Garmin SiriusXM antennas have a gain of approximately +2 dBi in the main lobe. Rejection of signals in the antenna back-lobe depends upon many factors including the type of aircraft and whether or not there is metal between the antenna and the interfering signal.

For non-metallic aircraft, Garmin recommends but does not require an 8" x 8" ground plane beneath the antenna. This ground plane increases the antenna's rejection in the back lobe, which attenuates an interfering signal coming from below an aircraft in level flight.

The antenna module with ground plane was placed in an anechoic chamber and radiated with a 2347.5 MHz signal from a horn antenna so that the relative horizon and reverse gain shown in Table 3 could be measured.

Antenna Gain relative to isotropic based on angle			
Angle	Description	Gain	u/m
0	Direct (intended) angle	2	dBi
90	Horizon (perpendicular) angle	0.5	dBi
180	Reverse (bottom) angle	-5.5	dBi

Table 3: Antenna Gain based on angle

Distance Calculations

The Friis free space path loss ("FSPL") equation was used in conjunction with the measured values in Table 2 and Table 3 to calculate the separation distance needed between an aircraft in level flight and a WCS D block transmitter in order to avoid interference. These results are recorded in Table 4, below, and range from 0.75 miles in the best case to 23.4 miles in the worst case.

Distance needed to avoid interference from 2 kW EIRP carrier wave at various frequencies based on a -5.5 dBi antenna rejection			
Interfering Frequency	BER failures on Satellite 1	BER failures on Satellite 2	u/m
2.345 GHz	123,639	24,499	ft
2.3475 GHz	6,890	5,435	ft
2.35 GHz	3,997	3,433	ft
From SiriusXM Spec	14,082	14,082	ft

Table 4: Distance needed to avoid interference

A similar analysis was applied to the case where the XM antenna's horizon is aligned with the WCS D block transmit antenna. This scenario will present itself when an aircraft banks as illustrated in Figure 5. The results from this analysis are listed in **Table 5**.

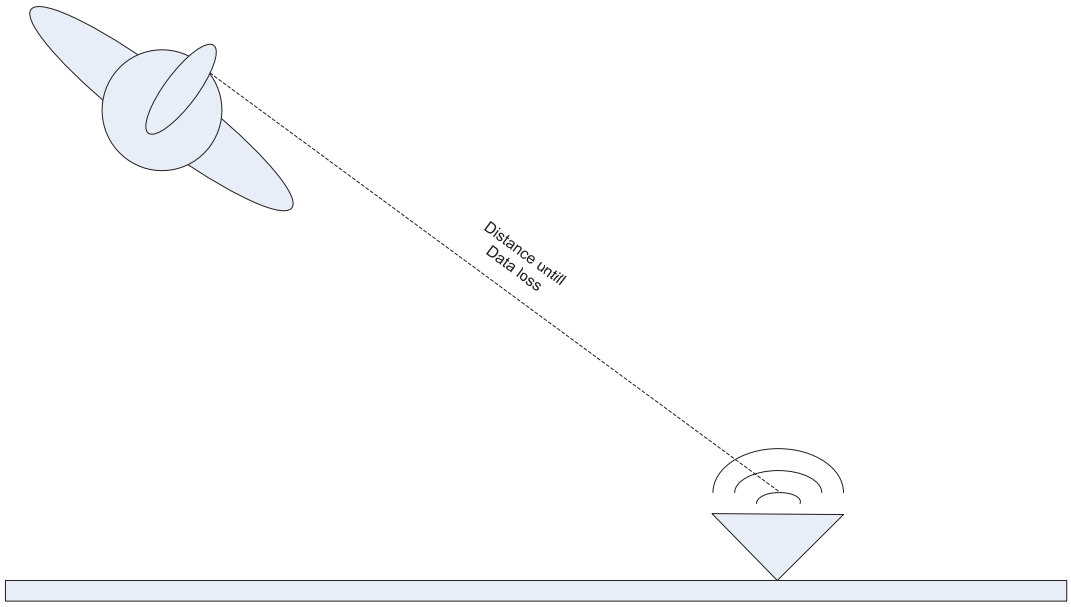

Figure 5: Antenna horizon interference

Distance needed to avoid interference from 2 kW EIRP carrier wave at various frequencies based on a +0.5 dBi antenna gain			
Frequency	BER failures on Satellite 1	BER failures on Satellite 2	u/m
2.345 GHz	246,693	48,882	ft
2.3475 GHz	13,747	10,845	ft
2.35 GHz	7,975	6,851	ft
From SiriusXM Spec	27,980	27,980	ft

Table 5: Horizon distance until interference

Comments on Analysis

Garmin is not an LTE provider and recognizes that this testing may not take into account a number of variables associated with an LTE network.

-The analysis only studies the possible effects of overload from the 2345-2350 MHz ground-to-air transmitter in the WCS D block. It does not study the potential interference caused by the air-to-ground transmitters in the WCS C block, nor does it consider the effects of OOBE from either of the aforementioned transmitters.

-This study is based around the analysis of a carrier wave with a phase noise of -110 dBc/Hz. As such, it does not consider additional interference introduced by the LTE signal, which has a PAPR of 13 dB. Additional testing will be required to ascertain the increased interference from an LTE signal.

Conclusion

As shown by Garmin in this document, the proposed plan to occupy the WCS D Block spectrum (2345-2350 MHz) will result in jamming of airborne SDARS receivers. This will impact SiriusXM reception with a resulting loss of graphical and textual weather data used by pilots during flight.

Additional studies are needed to ascertain the impact of OOBE and overload introduced by an LTE signal.

Declaration

I, Scott Burgett, declare under penalty of perjury that the following is true and correct:

1. I am Director, GNSS and Software Technology, at Garmin International, Inc. ("Garmin"). I am making this declaration in connection with the Comments of Garmin (the "Comments") on the AT&T Petition for Rulemaking Regarding Revision of WCS Rules, RM-11731.

2. I supervised preparation of the study entitled "SDARS Interference from WCS," attached to the Comments as Exhibit 1 and the interference testing described in the study. The description of the testing methodology and the results of the testing are reported accurately in Exhibit 1.

By Scott Burgett
Scott Burgett

Date: September 22, 2014

Certificate of Service

I hereby certify that I caused a copy of the foregoing "Comments of Garmin International, Inc." to be emailed to the following on this date:

Gary L. Phillips
AT&T Services, Inc.
1120 Twentieth Street, N.W.
Suite 1000
Washington, DC 20036
gp3812@att.com

/s/
Joshua H. Maxfield

Dated: September 22, 2014